APPROVED
April 02 2026
BOARD OF RECREATION
AND PARK COMMISSIONERS

BOARD REPORT **NO.** 26-069

DATE April 02, 2026 C.D. 1

BOARD OF RECREATION AND PARK COMMISSIONERS

SUBJECT: MACARTHUR LAKE STORMWATER CAPTURE (W.O. #S043MSWC, S343MSWC, S33WMLRP, S34WMLRP) PROJECT – APPROVAL OF FINAL PLANS AND SPECIFICATIONS – CONSIDERATION OF THE FINAL ENVIRONMENTAL IMPACT REPORT (FEIR), CALIFORNIA ENVIRONMENTAL QUALITY ACT (CEQA) FINDINGS AND STATEMENT OF CONSIDERATION AND MITIGATION MONITORING REPORTING PROGRAM FOR MACARTHUR LAKE STORMWATER CAPTURE (SCH 2022040153)

B. Aguirre		M. Rudnick	
B. Jones	for *	C. Santo Domingo	DF
C. Stoneham		N. Williams	

General Manager

Approved X Disapproved Withdrawn

RECOMMENDATIONS

1. Approve the final plans (Attachment No. 1) and specifications (Attachment No. 2), substantially in the form on file in the Board of Recreation and Park Commissioners (Board) Office and attached to this Report, for the MacArthur Lake Stormwater Capture (W.O. # S043MSWC, S343MSWC, S33WMLRP, S34WMLRP) Project (Project); and,

2. Authorize RAP staff to make technical corrections as necessary to carry out the intent of this Report.

SUMMARY

On November 6, 2018, Los Angeles County voters passed the Measure W Safe Clean Water (SCW) Program, which generates approximately $280 million annually to support a comprehensive regional plan for stormwater initiatives that improve water quality, increase local water supply, and provide community benefits. The MacArthur Lake Stormwater Capture Project (Project) was approved by the Los Angeles County Board of Supervisors on October 29, 2020, for inclusion in the Stormwater Investment Plan (SIP) for Measure W Round 1 Regional Funding in fiscal year (FY) 2020-21. The initial five-year funding allocation of $20,043,718 was subsequently increased by $11,000,000 to $31,043,718 on October 22, 2024, when the Los Angeles County Board of Supervisors adopted the fiscal year 2024-25 SIP.

The Project is a stormwater quality improvement project partially in MacArthur Park (Park), initiated by LASAN in collaboration with RAP, supported by the Bureau of Engineering (BOE) for design and construction, and funded by the Measure W, also known as the County of Los Angeles

Safe Clean Water Program (SCWP). The purpose of the Project is to improve water quality in the Ballona Creek watershed in an effort to comply with regulatory standards and to provide community benefits, such as partially offsetting potable water use to the lake and providing enhancements to the park.

The Project, which is located at 680 Park View Street in Los Angeles, aims to implement a series of stormwater infrastructure improvements within the Park and the surrounding neighborhood south of the Park. These enhancements are designed to improve stormwater management while also delivering significant community benefits. The proposed work includes diverting dry and wet weather flow from a nearby 45-inch diameter storm drain along Lake Street through a series of stormwater screening and filtration systems and then releasing it into MacArthur Lake or back to the storm drain if the lake reaches capacity. Additional improvements include a cascading water feature at the Park's southwest corner, enhanced landscaping, a new pedestrian bridge, and educational signage related to the Project. The existing pumphouse and recirculation system will be improved with new control systems and upgrades to various mechanical and electrical systems.

Community outreach was performed throughout the pre-design and design phases of the Project to gather community input on the Project and incorporate it into the Project's design. Council District 1 (CD1) has ensured the community was involved throughout the design process by assisting the Project team in coordinating community meetings between August 2020 through December 2025. CD1 and the community are supportive of the Project.

The Project was conceptually approved by the Board on October 1, 2020 (Report No. 20-191). LASAN and BOE staff have also provided updates to the Facility Repair and Maintenance Task Force (Task Force) on June 16, 2022, February 1, 2024, and August 7, 2025. The Project was also presented to the Board on October 16, 2025 for the certification of the Environmental Impact Report as required by the California Environmental Quality Act (CEQA).

The Project plans, when signed by the City Engineer, will be advertised and awarded through the Board of Public Works, with construction managed by BOE.

The City Engineer's Estimate is $26,216,000. The budgeted amount for construction contingency is $2,622,000 or 10% of the construction cost.

The Project is fully funded by Measure W and Prop K as shown in the following funding table:

FUNDING SOURCE	FUND/DEPT/ACCT	AMOUNT
Measure W Regional Funding	63F/50/50VABY	$27,072,652
Measure W Municipal Funding (Measure W Local Return Fund)	60W/50/50CABY	$2,500,000
Measure W Municipal Funding (Measure W Local Return Fund)	60W/50/50YABY	$1,044,604

Prop K Funding	43K/50/TBD	$550,000

TREES AND SHADE

The Project proposes to remove one existing Mexican Fan Palm tree (trunk diameter - 10 inches), one existing Sweetgum Tree (trunk diameter - 17 inches), and the relocation of one Pink Trumpet tree (trunk diameter – 12 inch). The two removed trees would be replaced with ten new trees to be planted in the park. The replacement trees will consist of four Shoestring Acacia, three Pink Trumpet, and three Island Oak trees. Trees affected by the construction of the Project will be protected in place using the tree protection zone (TPZ) guidelines from RAP. The removal of proposed trees and replacements was coordinated and approved by the RAP Forestry Division.

It is not anticipated that any additional trees within the Project area will require removal or relocation. However, if additional trees require removal, removed trees will be replanted or replaced in accordance with RAP policies and requirements and with RAP's forestry division's approval.

ENVIRONMENTAL IMPACT

BOE's Environmental Management Division served as the City's CEQA Lead agency and prepared an Environmental Impact Report (EIR) that analyzes the Project. The Draft EIR was released for public review on May 23, 2024 and the Final EIR was published on August 28, 2025. The Board of Recreation and Park Commissioners recommended that the City Council certify the Final Environmental Impact Report (FEIR), adopt the Project's CEQA Findings and Statement of Overriding Considerations and adopt the Mitigation Monitoring Program (MMRP) on October 16, 2025 (Report No. 25-176). The Los Angeles City Council approved the Project, certified the Project's FEIR, and adopted the Project's CEQA Findings and Statement of Overriding Considerations and the MMRP on November 5, 2025 (Council File No. 23-0494-S2). The BOE staff filed a Notice of Determination (Attachment No. 3) with the Los Angeles County Clerk and with the Office of Land use and Climate Innovation on November 6, 2025 (SCH 2022040153).

Staff found that no changes to the Project approved by the City Council and to the environmental documents have occurred, therefore recommends that the Board take no additional CEQA action.

FISCAL IMPACT

The proposed construction is fully funded by the Measure W Safe Clean Water Program - Regional Fund, Measure W Local Return Fund, and Proposition K. There will be no fiscal impact to RAP's General Fund associated with the Project.

The maintenance cost of the proposed Project is yet to be determined. It is anticipated that RAP and LASAN will enter into maintenance agreements for LASAN to be responsible, at its own

expense, for the maintenance of any stormwater capture or water quality improvement components that are proposed to be installed on RAP property.

This Report was prepared by Brandon Kawaguchi and Wirikit Wichianchan, Project Managers, BOE Clean Water Division; reviewed by Bryan Powell, Senior Civil Engineer, BOE Clean Water Division and Christopher Johnson, Principal Civil Engineer, BOE Clean Water Division; Sean H. Phan, Senior Civil Engineer, LASAN Safe Clean Water Implementation Division; Gary Lam, Principal Civil Engineer and Darryl Ford, Superintendent, Department of Recreation and Parks, Planning, Construction and Maintenance Branch.

LIST OF ATTACHMENTS

1) Attachment No. 1 – Final Plans
2) Attachment No. 2 – Final Specifications
3) Attachment No. 3 – Notice of Determination for MacArthur Park EIR, dated 11/06/2025

Attachment 1

CITY OF LOS ANGELES
DEPARTMENT OF PUBLIC WORKS
BUREAU OF ENGINEERING

MACARTHUR LAKE STORMWATER CAPTURE PROJECT

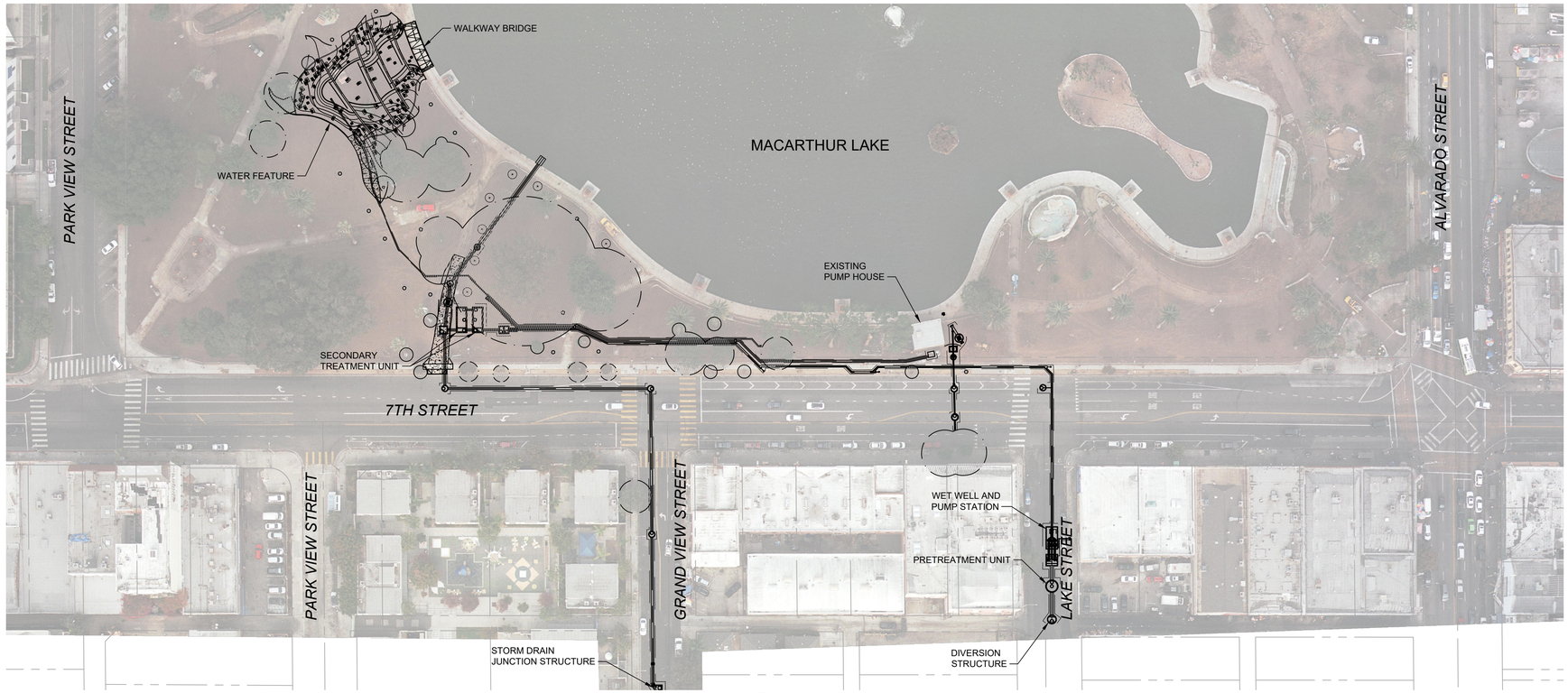

PLAN
SCALE: 1"=50'



VICINITY PLAN
NOT TO SCALE

PROJECT WORK DESCRIPTION

WORK WITHIN MACARTHUR PARK PROPERTY LINE:
1. REINFORCED CONCRETE PIPE - 337' & DUCTILE IRON PIPE - 394'
2. SECONDARY TREATMENT UNIT
3. (4) VALVE BOX
4. (2) METER BOX
5. (3) MANHOLES
6. WATER FEATURE INCLUDING 4 RETAINING WALLS
7. REPAVING WALKWAY
8. IMPROVEMENTS TO EXISTING PUMP HOUSE
9. ELECTRICAL DUCTBANK

WORK WITHIN CITY OF LOS ANGELES RIGHT OF WAY:
1. REINFORCED CONCRETE PIPE - 33' & DUCTILE IRON PIPE - 425'
2. STORM DRAIN DIVERSION STRUCTURE IN LAKE STREET
3. PRETREATMENT UNIT IN LAKE STREET
4. WET WELL AND PUMP STATION IN LAKE STREET
5. VALVE AND METER BOX IN LAKE STREET
6. (4) MANHOLES AND (1) BLOW OFF VALVE

ADDRESS:
680 S PARK VIEW ST, LOS ANGELES, CA 90057
ASSESSOR PARCEL NO. (APN):
5141003900
TRACT: HANCOCKS SURVEY
BLOCKS: 25
LOT: PT1

carollo

LA SANITATION AND ENVIRONMENT
TRACI MINAMIDE, INTERIM GENERAL MANAGER

PROJECT TEAM

OWNER: SAFE CLEAN WATER IMPLEMENTATION DIVISION
ROBERT J. POTTER
ASSISTANT DIRECTOR

MICHAEL SCADUTO, P.E., ENV. SP
DIVISION MANAGER

SEAN H. PHAN, P.E.
SENIOR CIVIL ENGINEER

NAOMI DIEP, P.E.
ENVIRONMENTAL ENGINEER

RAYMOND LAM, P.E.
CIVIL ENGINEERING ASSOCIATE III

GISELLE RAMIREZ, E.I.T.
ENVIRONMENTAL ENGINEERING ASSOCIATE II

RECREATION AND PARKS
NORMA EDITH GARCIA-GONZALEZ
DIRECTOR

DARRYL FORD
SUPERINTENDENT OF PLANNING

LOS ANGELES DEPARTMENT OF PUBLIC WORKS, BUREAU OF ENGINEERING:
ALFRED MATA, P.E.
INTERIM CITY ENGINEER

CHRISTOPHER F. JOHNSON, G.E., P.E.
DIVISION ENGINEER

BRYAN POWELL, P.E.
SENIOR CIVIL ENGINEER

WIRIKIT WICHIANCHAN, P.E.
CIVIL ENGINEER ASSOCIATE III

BRANDON KAWAGUCHI, P.E.
CIVIL ENGINEER ASSOCIATE III

ARCHITECTURE:
RICK FISHER
LANDSCAPE ARCHITECT I

ENVIRONMENTAL: ENVIRONMENTAL DIVISION
DR. JAN GREEN REBSTOCK
ENVIRONMENTAL SUPERVISOR I

CRISTIAN CENTENO
ENVIRONMENTAL AFFAIRS OFFICER

BID AND AWARD: PROJECT AWARD AND CONTROL DIVISION
ARSEN VOSKERCHYAN, P.E.
DIVISION MANAGER

SURVEY: GUIDA SURVEYING, INC
TIM FETTIG, P.L.S.
CHIEF SURVEYOR

DESIGN MANAGEMENT: CAROLLO ENGINEERS
ROBERT F. BUSS
DESIGN MANAGER

GEOTECHNICAL: NINYO & MOORE
MICHAEL I. PUTT, P.E.
PRINCIPAL GEOLOGIST

CIVIL DESIGN: CRAFTWATER
COURTNEY SEMLOW, P.E.
CIVIL ENGINEER

STRUCTURAL DESIGN: CAROLLO ENGINEERS
DAVID GEISLER, P.E.
STRUCTURAL ENGINEER

MECHANICAL DESIGN: CAROLLO ENGINEERS
RYLEE MOWRER, P.E.
MECHANICAL ENGINEER

ELECTRICAL & INSTRUMENTATION DESIGN: PROJECTLINE
ROBERT GETTER, P.E.
ELECTRICAL ENGINEER

LANDSCAPE ARCHITECT DESIGN: STUDIO-MLA
KUSH PAREKH
LANDSCAPE ARCHITECT

CONSTRUCTION MANAGEMENT: BOE CONSTRUCTION MANAGEMENT DIVISION
MEGHAN ALDERICH, P.E.
DIVISION MANAGER

JUSTIN RAMIREZ, P.E.
SENIOR CIVIL ENGINEER

INSPECTION: BUREAU OF CONTRACT ADMINISTRATION
JOHN L. REAMER, JR
DIRECTOR (INSPECTOR OF PUBLIC WORKS)

CONSULTANT: CAROLLO ENGINEERS
JULIA SCHMITT, P.E.
PROJECT MANAGER

ENGINEERING
CITY OF LOS ANGELES
Environmental Engineering Division

THIS PLAN WAS ELECTRONICALLY ACCEPTED AND STAMPED

BUREAU OF ENGINEERING
VERTICAL CONTROL: LOS ANGELES SURVEY DATUM, (2.14565.286.523 FEET) NAVD 88)
HORIZONTAL CONTROL: CA. (CCS83), ZONE V, NAD 1983 (NA2011, EPOCH 2021.250)
SHEET TITLE: TITLE SHEET
PROJECT: MACARTHUR LAKE STORMWATER CAPTURE PROJECT
ADDRESS: MACARTHUR PARK 2230 6TH ST LOS ANGELES CA 90057

DEPARTMENT OF PUBLIC WORKS
CITY OF LOS ANGELES
ALFRED MATA, P.E. INTERIM CITY ENGINEER
DEPUTY CITY ENGINEER/PROGRAM MANAGER DATE
CITY ENGINEER DATE
NO. REVISIONS BY: DATE:
CIP NO. 1920R004
INDEX NO. D-XXXXX
SHEET TYPE GENERAL
WORK ORDER NO. S33WMLRP, S043MSWC, S343MSWC
SHEET NAME GI01
SHEET 1 OF 108 SHEETS

THE CITY OF LOS ANGELES OR ITS OFFICERS OR AGENTS SHALL NOT BE RESPONSIBLE FOR THE ACCURACY OR COMPLETENESS OF ELECTRONIC COPIES OF THIS PLAN SHEET.

REVISION DATES (DESIGN STAGE ONLY)

SHEET NO.	DRAWING NO.	DESCRIPTION
		(G) - GENERAL
1	GI01	TITLE SHEET
2	GI02	DRAWING INDEX AND BYPASS NOTES
3	GI03	ABBREVIATIONS AND SYMBOLS
4	GI04	NOTICE TO CONTRACTORS AND LEGEND
		(C) - CIVIL
5	CB101	EROSION AND SEDIMENT CONTROL PLAN 1
6	CB102	EROSION AND SEDIMENT CONTROL PLAN 2
7	CB103	GRADING AND DRAINAGE PLAN 1
8	CB104	GRADING AND DRAINAGE PLAN 2
9	VF101	SURVEY HORIZONTAL & VERTICAL CONTROL PLAN
10	CD101	DEMOLITION AND STAGING PLAN 1
11	CD102	DEMOLITION AND STAGING PLAN 2
12	CS101	EXISTING CONDITIONS PLAN
13	CS102	CIVIL SITE PLAN
14	CS501	CIVIL SITE DETAILS 1
15	CU101	PLAN & PROFILE - STORM DRAIN DIVERSION LINE STA 10+00 TO STA 12+15
16	CU102	PLAN & PROFILE - STORM DRAIN DIVERSION LINE STA 12+15 TO STA 14+30
17	CU103	PLAN & PROFILE - STORM DRAIN DIVERSION LINE STA 14+30 TO STA 16+25
18	CU104	PLAN & PROFILE - STORM DRAIN DIVERSION LINE STA 16+25 TO END
19	CU105	PLAN & PROFILE - DISCHARGE TO LAKE LINE STA 10+00 TO END
20	CU106	PLAN & PROFILE - RETURN TO STORM DRAIN LINE STA 10+00 TO STA 12+60
21	CU107	PLAN & PROFILE - RETURN TO STORM DRAIN LINE STA 12+60 TO END
22	CU108	PLAN & PROFILE - LAKE TO SANITARY SEWER LINE STA 10+00 TO END
23	CU501	CIVIL UTILITY DETAILS 1
24	CU502	CIVIL UTILITY DETAILS 2
25	CU503	CIVIL UTILITY DETAILS 3
26	CU504	CIVIL UTILITY DETAILS 4
27	CU505	CIVIL UTILITY DETAILS 5
		(L) - LANDSCAPE
28	LG001	GENERAL NOTES & SHEET INDEX
29	LS100	TREE DISPOSITION NOTES & SCHEDULE
30	LS101	LANDSCAPE DEMOLITION & TREE PROTECTION PLAN, SHEET 1
31	LS102	LANDSCAPE DEMOLITION & TREE PROTECTION PLAN, SHEET 2
32	LS200	CONSTRUCTION NOTES & SCHEDULE
33	LS201	LANDSCAPE CONSTRUCTION PLAN
34	LS601	LANDSCAPE CONSTRUCTION DETAILS, SHEET 1
35	LS602	LANDSCAPE CONSTRUCTION DETAILS, SHEET 2
36	LS603	LANDSCAPE CONSTRUCTION DETAILS, SHEET 3
37	LI700A	IRRIGATION NOTES
38	LI700B	IRRIGATION SCHEDULE & CALCULATIONS
39	LI700C	HYDROZONE PLAN
40	LI701	IRRIGATION PLAN, SHEET 1
41	LI702	IRRIGATION PLAN, SHEET 2
42	LI710	IRRIGATION DETAILS, SHEET 1
43	LI711	IRRIGATION DETAILS, SHEET 2
44	LI712	IRRIGATION AS-BUILT DRAWINGS
45	LP800	PLANTING NOTES & SCHEDULE
46	LP801	PLANTING PLAN, SHEET 1
47	LP802	PLANTING PLAN, SHEET 2
48	LP810	PLANTING DETAILS
		(S) - STRUCTURAL
49	SG001	GENERAL STRUCTURAL NOTES
50	SG002	TYPICAL STRUCTURAL DETAILS 1
51	SG003	TYPICAL STRUCTURAL DETAILS 2
52	SB501	STRUCTURAL DETAILS
53	SB502	BRIDGE PLAN, SECTIONS AND DETAILS

SHEET NO.	DRAWING NO.	DESCRIPTION
		(M) - MECHANICAL
54	MG001	GENERAL MECHANICAL LEGEND AND SYMBOLS
55	MG501	MECHANICAL DETAILS 1
56	MG502	MECHANICAL DETAILS 2
57	MG503	MECHANICAL DETAILS 3
58	MG601	MECHANICAL PIPING, PUMP FLOW METER AND MISC SCHEDULES
59	MD102	DEMOLITION PUMP HOUSE PLAN
60	MD302	DEMOLITION PUMP HOUSE SECTIONS
61	MD801	DEMOLITION PUMP HOUSE PHOTO DETAILS
62	MP101	LAKE STREET DIVERSION STRUCTURES PUMP STATION PLAN
63	MP102	PUMP HOUSE MECHANICAL PIPING PLAN
64	MP301	LAKE STREET DIVERSION STRUCTURES PUMP STATION SECTION
65	MP302	PUMP HOUSE SECTIONS
		(E) - ELECTRICAL
66	EG001	ELECTRICAL GENERAL NOTES
67	EG002	ELECTRICAL SYMBOLS
68	ED001	DEMOLITION SINGLE LINE DIAGRAM AND SWBD & MCC ELEVATION
69	ED002	DEMOLITION PUMP HOUSE ELECTRICAL PLAN
70	ED003	DEMOLITION ELECTRICAL DETAILS
71	ES001	SINGLE LINE DIAGRAM AND PANEL SCHEDULE 1
72	ES002	SINGLE LINE DIAGRAM AND PANEL SCHEDULE 2
73	ES003	CONDUIT DEVELOPMENT
74	ES004	PANEL ELEVATION AND PANEL SCHEDULE
75	ES005	ELECTRICAL SITE PLAN - OVERALL
76	ES006	PLAN & PROFILE - PUMP STATION
77	ES007	PLAN & PROFILE - PUMP HOUSE
78	ES008	PLAN & PROFILE - ELECTRICAL DUCTBANK
79	EP001	PUMP HOUSE POWER & INSTRUMENTATION PLAN 1
80	EP002	PUMP HOUSE POWER & INSTRUMENTATION PLAN 2
81	EP003	LAKE STREET DIVERSION STRUCTURE POWER AND INSTRUMENTATION PLAN
82	EP004	FILTER TREATMENT STRUCTURE
83	EP005	FILTER TREATMENT CONTINUATION
84	EP006	MOTOR ACTUATED PLUG VALVE & SLIDE GATE CONTROL SCHEMATIC
85	EP007	PUMP102 103 VFD CONTROL
86	EP008	ELECTRICAL SCHEMATIC DIAGRAM LCP-01 & PLC-01
87	EP009	ELECTRICAL SCHEMATIC DIAGRAM LCP-01
88	EP010	COMMUNICATION BLOCK DIAGRAM AND LCP-02 CABINET LAYOUT
89	EP011	EXISTING FOUNTAIN PUMP CONTROL SCHEMATICS 1
90	EP012	EXISTING FOUNTAIN PUMP CONTROL SCHEMATICS 2
91	EP013	EXISTING FOUNTAIN PUMP CONTROL SCHEMATICS 3
92	EP014	ELECTRICAL DETAILS SHEET 1
93	EP015	ELECTRICAL DETAILS SHEET 2
94	EP016	ELECTRICAL DETAILS SHEET 3
95	EP017	ELECTRICAL DETAILS SHEET 4
96	EP018	ELECTRICAL DETAILS SHEET 5
97	EP019	ELECTRICAL DETAILS SHEET 6
98	EP020	ELECTRICAL DETAILS SHEET 7
99	EP021	CONDUIT & CABLE SCHEDULE
		(N) - INSTRUMENTATION
100	IG001	INSTRUMENTATION SYMBOLS & ABBREVIATIONS
101	IG002	INSTRUMENTATION SYMBOLS
102	IP101	OVERALL FLOW SCHEMATIC
103	IP102	INSTRUMENTATION PLAN I
104	IP103	INSTRUMENTATION PLAN II
105	IP104	INSTRUMENTATION PLAN III
106	IP105	INSTRUMENTATION PLAN IV
107	IP106	PLC INPUT OUTPUT LIST 1
108	IP107	PLC INPUT OUTPUT LIST 2

BYPASS NOTES

1. THE CONTRACTOR SHALL VERIFY ALL DIMENSIONS AND CONDITIONS IN THE FIELD BEFORE STARTING WORK AND SHALL NOTIFY THE ENGINEER IMMEDIATELY OF ANY DISCREPANCIES.

2. THE CONTRACTOR IS HEREBY NOTIFIED THAT THE EXISTING ALIGNMENT AND SUBSTRUCTURES SHOWN IN THIS SET OF DRAWINGS ARE TAKEN FROM AVAILABLE RECORDS AND INTERPRETED BY THE ENGINEER'S BEST JUDGEMENT. THE CONTRACTOR SHALL NOTIFY AND REQUEST DIRECTION FROM THE ENGINEER WHEN UTILITIES WHICH ARE NOT SHOWN ON THE PLANS ARE LOCATED. FOR UTILITY CROSSINGS OVER THE SANITARY SEWER WHERE THE VERTICAL CLEARANCE IS LESS AND 18-INCHES (FROM THE TOP OF SEWER PIPE TO BOTTOM OF UTILITY), CONTRACTOR SHALL INSTALL A CONCRETE BLANKET OVER EXISTING SEWER PER STANDARD PLAN S-255.

3. LOCATIONS OF EXISTING HOUSE CONNECTION SEWERS SHOWN HEREON ARE APPROXIMATE. IF INTERFERENCE IS ENCOUNTERED, REMODEL THE HOUSE CONNECTION IN CONFORMANCE WITH THE APPLICABLE DETAIL ON STAND PLAN S-111-0.

4. PAVING OF ROADWAY AREAS SHALL BE WITHHELD UNTIL THE SEWER AND STORM DRAIN WORK HAS BEEN APPROVED BY UNDERGROUND FINAL INSPECTION.

5. SEWER BYPASS AND PUMPING PLAN:

   A. THE CONTRACTOR IS ADVISED THAT ALL WORK AND REPAIRS ARE OVER ACTIVE SEWER SYSTEMS AND HOUSE CONNECTIONS. THE CONTRACTOR SHALL PROVIDE TEMPORARY MEANS TO MAINTAIN THE SEWAGE FLOW IN THE EXISTING SYSTEM AS REQUIRED TO COMPLETE THE NECESSARY CONSTRUCTION. THE CONSTRUCTION SHALL PREPARE AND SUBMIT A DETAILED BYPASS PLAN TO THE CITY FOR REVIEW AND APPROVAL PRIOR TO THE INSTALLATIONS OF THE BYPASS PLAN.

   B. UNLESS OTHERWISE INDICATED IN THIS PLAN THE BYPASS PLAN SHALL BE IN ACCORDANCE WITH THE LATEST BROWN BOOK, SECTIONS 7-8.5.2, 7-8.5.3, AND 306-6.1.

   C. FLOW CONDITIONS DURING CONSTRUCTION: THE CONTRACTOR SHALL VERIFY THE FLOW(S) TO DETERMINE THE BYPASS PUMP CAPACITY AND SYSTEM PRIOR TO CONSTRUCTION OF THE SEWER.

   D. SEWER BYPASS PLANS ARE REQUIRED, BUT NOT LIMITED TO, FOR ANY OPEN CUT INSTALLATION CROSSING UNDER PRIMARY (>15") SEWERS, UNDERMINING THE BEDDING OR EXPOSING THE SEWER.

6. SPILL PREVENTION AND EMERGENCY RESPONSE PLAN

   A. THE CONTRACTOR SHALL OBSERVE AND COMPLY WITH THE CITY'S POLICY OF "ZERO SEWER SPILLS" ADOPTED BY THE BOARD OF PUBLIC WORKS ON JANUARY 10, 2011, AND SHALL BE IN FULL CHARGE AND BE RESPONSIBLE FOR THE JOBSITE AND THE CONSTRUCTION WORK OF THIS CONTRACT. THE ZERO SEWER SPILLS POLICY CAN BE FOUND AT: http://boe.lacity.org/docs/dpw/agendas/2011/201101/20110110/bca/20110110_ag_mo_bca_boe_bos.pdf.

   B. THE CONTRACTOR SHALL OBSERVE AND COMPLY WITH ALL FEDERAL, STATE, AND LOCAL LAWS, ORDINANCES, CODES, AND REGULATIONS WHICH IN ANY MANNER AFFECT THE CONDUCT OF THE WORK, SPECIFICALLY AS IT RELATES TO THE SEWAGE SPILLS.

   C. THE CONTRACTOR SHALL BE FULLY RESPONSIBLE FOR PREVENTING SEWAGE SPILLAGE, CONTAINING ANY SEWAGE SPILLAGE, RECOVERY AND LEGAL DISPOSAL OF ANY SPILLED SEWAGE, ANY AND ALL FINES, PENALTIES, CLAIMS AND LIABILITY ARISING FROM NEGLIGENTLY CAUSING A SEWAGE SPILLAGE AND ANY VIOLATION OF ANY LAW, ORDINANCE, CODE, ORDER, OR REGULATION AS A RESULT OF THE SEWAGE SPILLAGE.

   D. PRIOR TO THE START OF CONSTRUCTION THE CONTRACTOR SHALL DEVELOP AND SUBMIT A WRITTEN SPILL RESPONSE PLAN IN ACCORDANCE WITH THE BROWN BOOK SECTION 7-8.5.3, TO LOS ANGELES SANITATION BUREAU (LASAN) FOR REVIEW AND APPROVAL. NO CONSTRUCTION ACTIVITIES SHALL BE STARTED WITHOUT THE APPROVAL OF THE SUBMITTAL.

   E. THE CONTRACTOR SHALL BE RESPONSIBLE FOR RESOLVING ANY SEWAGE SPILLS CAUSED BY THE CONSTRUCTION, WHETHER THE SPILLS OCCUR ON OR OFF THE PROJECT SITE. THE CONTRACTOR SHALL SUBMIT THE SPILL RESPONSE PLAN TO THE DISTRICT OFFICE.

   F. IN CASE OF A SEWAGE SPILL, THE CONTRACTOR SHALL, WITHOUT INSTRUCTIONS FROM THE CITY, ACT IMMEDIATELY TO CONTROL THE SPILL AND TAKE ALL APPROPRIATE STEPS TO CONTAIN IT IN ACCORDANCE WITH THE SPILL RESPONSE PLAN. THE CONTRACTOR SHALL IMMEDIATELY NOTIFY THE CITY REPRESENTATIVES OF THE SPILL AND ALL ACTIONS TAKEN. THE CONTRACTOR SHALL, WITHIN THREE WORKING DAYS FROM THE OCCURRENCE OF THE SPILL, SUBMIT TO THE ENGINEER A WRITTEN CONFIRMATION REPORT DESCRIBING THE FOLLOWING INFORMATION RELATED TO THE SPILL:

      1) THE LOCATION.
      2) THE NATURE AND VOLUME OF THE SPILL.
      3) THE DATE AND TIME OF THE SPILL.
      4) THE DURATION OF THE SPILL.
      5) THE CAUSE OF THE SPILL.
      6) THE TYPE OF REMEDIAL AND/OR CLEAN UP MEASURES TAKEN AND THE DATE AND TIME OF IMPLEMENTATION.
      7) THE CORRECTIVE AND/OR PREVENTIVE ACTION TAKEN TO ELIMINATE THE POSSIBILITY OF A RECURRENCE.
      8) THE WATER BODY AFFECTED.
      9) THE RESULTS OF ANY NECESSARY MONITORING.

7. ALL SEWER WORK SHALL BE DONE BY AN APPROVED SEWER BONDED CONTRACTOR. A LIST OF APPROVED CONTRACTORS CAN BE FOUND AT http://engpermits.lacity.org/spermits/.

8. APPROVED SEWER PRODUCTS: ALL SEWER PRODUCTS USED WITHIN THE CITY OF LOS ANGELES, PRIMARY AND SECONDARY SEWER SYSTEMS, SHALL BE FROM THE APPROVED PRODUCTS FOUND AT http://boe.lacity.org/apm/.

ENGINEERING
CITY OF LOS ANGELES
Environmental Engineering Division

THIS PLAN WAS ELECTRONICALLY SIGNED AND STAMPED

REGISTERED PROFESSIONAL ENGINEER JULIA CHRISTINE SCHMITT No. 84039 CIVIL STATE OF CALIFORNIA
Digitally signed by Julia Christine Schmitt
Date: 2026.01.22 13:25:30 -08'00'

BUREAU OF ENGINEERING
VERTICAL CONTROL:
HORIZONTAL CONTROL:
SHEET TITLE: DRAWING INDEX AND BYPASS NOTES
PROJECT: MACARTHUR LAKE STORMWATER CAPTURE PROJECT
ADDRESS: MACARTHUR PARK 2230 6TH ST LOS ANGELES CA 90057

DEPARTMENT OF PUBLIC WORKS
CITY OF LOS ANGELES

NO.	REVISIONS	DATE	BY

CIP NO. 1920R004
INDEX NO. D-XXXXX

DESIGN GROUP	DATE
ENGINEER: JULIA C. SCHMITT	03/14/2024
ARCHITECT:	
DESIGNED BY: ROB BUSS	03/14/2024
DRAWN BY: TIM DIETZ	03/14/2024
CHECKED BY: RAPHAEL BUI & JERRY GANTNEY	03/14/2024
APPROVED BY: JULIA C. SCHMITT	07/16/2024

WORK ORDER S33WMLRP, S043MSWC, S343MSWC

SHEET NAME
GI02
SHEET 2 OF 108 SHEETS

carollo

THE CITY OF LOS ANGELES OR ITS OFFICERS OR AGENTS SHALL NOT BE RESPONSIBLE FOR THE ACCURACY OR COMPLETENESS OF ELECTRONIC COPIES OF THIS PLAN SHEET.

REVISION DATES (DESIGN STAGE ONLY)

SHEET VERSION 4.0.1 FILE PATH: C:\ICS\PW_RENDITION\D0225876\20381800GI02.DWG PLOT DATE: 1/22/2026 1:25 PM SAVED: 1/22/2026 1:24 PM SAVED BY:TDIETZ

FINAL DESIGN SUBMITTAL

	@	AT (MEASUREMENT)
	△	DEFLECTION ANGLE, CENTRAL ANGLE
	#	NUMBER (REBAR Ø)
A		
	AB	ANCHOR BOLT
	ABC	AGGREGATE BASE COURSE
	ABS	ACRYLONITRILE BUTADIENE STYRENE
	AC	ASPHALTIC CONCRETE
	ACB	AIR CIRCUIT BREAKER
	ACI	AMERICAN CONCRETE INSTITUTE
	ACP	ASBESTOS CEMENT PIPE
	ACU	AIR CONDITIONING UNIT
	AD	AREA DRAIN
	ADDL	ADDITIONAL
	ADJ	ADJACENT, ADJUST, ADJUSTABLE
	ADMIN	ADMINISTRATION
	ADR	ACCESS DOOR
	AED	AREA EQUIPMENT DRAIN
	AER	AERAT(ION)(OR)
	AFF	ABOVE FINISHED FLOOR
	AFM	AIR FLOW MONITOR
	AIC	AIR COMPRESSOR
	ALT	ALTERNATE
	AL	ALUMINUM
	ANCH	ANCHOR
	ANV	ANGLE VALVE
	APPROX	APPROXIMATE, APPROXIMATELY
	ARCH	ARCHITECTURAL
	ARV	AIR RELEASE VALVE
	ASSY	ASSEMBLY
	ASTM	AMERICAN SOCIETY FOR TESTING AND MATERIALS
	AVG	AVERAGE
	AVV	AIR AND VACUUM VALVE
B		
	BC	BEGIN CURVE, BRASS CAP, BACK OF CURB, BOLT CIRCLE
	BD	BOARD
	BDR	BASIN DRAIN LINE
	BF	BLIND FLANGE
	BFG	BELOW FINISHED GRADE
	BFV	BUTTERFLY VALVE
	BG	BREAK GLASS HAND SWITCH
	BKW	BACKWASH
	BLDG	BUILDING
	BLK	BLOCK
	BLKHD	BULKHEAD
	BM	BEAM, BENCH MARK
	BO	BOTTOM OF
	BOTT	BOTTOM
	BPV	BACK PRESSURE VALVE
	BRG	BEARING
	BSP	BLACK STEEL PIPE
	BTU	BRITISH THERMAL UNITS
	BTWN	BETWEEN
	BV	BALL VALVE
	BWCCP	BAR-WRAPPED CONCRETE CYLINDER PIPE
C		
	C	CLOSE, CONDUIT CHANNEL (STRUCTURAL)
	CA	CONCRETE ANCHOR
	CB	CATCH BASIN
	CC	CENTER OF CURVATURE, CENTER TO CENTER
	CDT	CONDUIT
	CEF	CEILING EXHAUST FAN
	CF	CUBIC FEET
	CFM	CUBIC FEET PER MINUTE
	CFS	CUBIC FEET PER SECOND
	CI	CAST IRON
	CIP	CAST IRON PIPE
	CIRC	CIRCUMFERENTIAL/CIRCUMFERENCE
	CJ	CONSTRUCTION JOINT
	CKA	CHECK VALVE, ANGLE
	CKB	CHECK VALVE, BALL
	CKF	CHECK VALVE, FLAP
	CKS	CHECK VALVE, SWING
	CL	CENTER LINE
	CLK	CHAIN LINK
	CLR	CLEAR
	CLSM	CONTROLLED LOW STRENGTH MATERIAL
	CML	CEMENT MORTAR LINED
	CMLC	CEMENT MORTAR LINED AND COATED
	CMP	CORRUGATED METAL PIPE
	CMU	CONCRETE MASONRY UNIT
	CNV	CONVEYOR
	CO	CLEANOUT
	COL(S)	COLUMN(S)
	CONC	CONCRETE
	CONN	CONNECT, CONNECTION
	CONST	CONSTRUCTION
	CONT	CONTINUOUS OR CONTINUATION OR (D) (OUS)
	CORR	CORRUGATE(D), CORROSION
	CP	CONTROL POINT
	CPLG	COUPLING
	CPVC	CHLORINATED POLYVINYL CHLORIDE
	CS	CARBON STEEL, CIRCULATING SLUDGE
	CT	CURRENT TRANSFORMER, CERAMIC TILE
	CTJ	CONTROL JOINT
	CTL	CONTROL
	CTR	CENTER, CENTERED
	CTSK	COUNTERSUNK
	CU	CUBIC
	CUP	COPPER PIPE
	CV	CHECK VALVE
	CW	COLD WATER
	CY	CUBIC YARD
D		
	D	DEPTH, DIGITAL OR DISCRETE, DRAIN
	D/W	DRIVEWAY
	DBL	DOUBLE
	DDR	DESICCANT DRYER
	DEG or °	DEGREE
	DEMO	DEMOLISH, DEMOLITION
	DET	DETAIL
	DG	DOOR GRILLE
	DIA or Ø	DIAMETER
	DIAG	DIAGONAL
	DIF	DIFFUSER
	DIG	DIGESTER
	DIM	DIMENSION
	DIP	DUCTILE IRON PIPE
	DISCH	DISCHARGE
	DIW	DEIONIZED WATER
	DL	DEAD LOAD, DRAIN LINE
	DMS	DIAPHRAGM SEAL
	DN	DOWN
	do	DITTO
	DO	DOOR OPENING
	DP	DEEP (OR DEPTH)
	DPV	DIAPHRAGM VALVE
	DR	DOOR, DRAIN
	DRT	DRIP TRAP
	DRV	DRAIN VALVE
	DWD	DEWATERING DRAIN
	DWG(S)	DRAWING(S)
	DWL(S)	DOWEL(S)
E		
	E	EAST
	EA	EACH
	EC	END OF CURVE
	ECC RED	ECCENTRIC REDUCER
	ED	EQUIPMENT DRAIN
	EF	EXHAUST FAN, EACH FACE
	EFF	EFFLUENT
	EIFS	EXTERIOR INSULATION AND FINISH SYSTEM
	EJ	EXPANSION JOINT
	EL	ELEVATION
	ELEC	ELECTRICAL
	ELL	ELBOW
	EMBED	EMBEDMENT
	EMH	ELECTRICAL MANHOLE
	EP	EDGE OF PAVEMENT
	EPV	ECCENTRIC PLUG VALVE
	EQ	EQUAL
	EQUIP	EQUIPMENT
	ES	EACH SIDE
	ESEW	EMERGENCY SHOWER AND EYE WASH
	ESS	EMERGENCY HAND SWITCH
	ET	ELECTRICALLY HEAT TRACED
	EUH	ELECTRIC UNIT HEATER
	EVR	EVAPORATOR
	EW	EACH WAY
	EWEF	EACH WAY EACH FACE
	EWH	ELECTRIC WATER HEATER, EXHAUST
	EX	EXISTING
	EXIST	EXISTING
	EXP	EXPANSION, EXPANSION TANK
	EXPO	EXPOSED
	EXT	EXTERIOR
F		
	FB	FLAT BAR
	FBW	FILTER BACKWASH
	FC	FACE OF CURB, FLEXIBLE COUPLING
	FCA	FLANGE COUPLING ADAPTER
	FCO	FLOOR CLEANOUT
	FCU	FAN COIL UNIT
	FD	FIRE DAMPER, FLOOR DRAIN, FOUND
	FDC	FIRE DEPARTMENT CONNECTION
	FDL	FLOOR DRAIN LINE
	FDR	FEEDER
	FEFF	FINAL EFFLUENT
	FG	FLAP GATE, FINISHED GRADE
	FH	FIRE HYDRANT
	FILT	FILTRATE
	FIN	FINISH
	FIN FL	FINISHED FLOOR
	FIN GR	FINISHED GRADE
	FL	FLOOR, FLOW LINE
	FLD	FILTER DRAIN
	FLE	FILTER EFFLUENT
	FLEX	FLEXIBLE
	FLG	FLANGE, OR FLANGED
	FLR	FILTER
	FM	FORCE MAIN
	FND	FOUNDATION
	FOB	FLAT ON BOTTOM
	FOT	FLAT ON TOP
	FPM	FEET PER MINUTE
	FPP	FLEXIBLE PLASTIC PIPE
	FRP	FIBERGLASS REINFORCED PLASTIC
	FRPP	FIBERGLASS REINFORCED PLASTIC PIPE
	FS	FAR SIDE
	FSTN	FASTEN(ED)
	FT or '	FOOT, FEET
	FTG	FOOTING
	FUP	FUEL DISPENSER
	FV	FLAP VALVE
	FW	FLUSHING WATER, FINISHED WATER
	FX	FIRE EXTINGUISHER
	FXC	FIRE EXTINGUISHER CABINET
	FXE	FIRE EXTINGUISHER - ELECTRICAL
G		
	G	GAS, GROUND, GUTTER
	GA	GAUGE or GAGE
	GAL	GALLONS
	GALV	GALVANIZE(D)
	GB	GRADE BREAK
	GBT	GRAVITY BELT THICKENER
	GC	GROOVED COUPLING
	GEN	GENERAL, GENERATOR
	GL	GLASS
	GLV	GLOBE VALVE
	GM	GAS METER
	GND	GROUND
	GPD	GALLONS PER DAY
	GPM	GALLONS PER MINUTE
	GR	GRADE
	GRTG	GRATING
	GRV	GRAVITY VENTILATOR
	GSP	GALVANIZED STEEL PIPE
	GV	GATE VALVE
	GYP	GYPSUM
H		
	H	EXPLOSION-PROOF, HIGH, HORIZONTAL
	H1E	HOOK ONE END
	H2E	HOOK TWO ENDS
	HAS	HEADED ANCHOR STUD
	HB	HOSE BIBB
	HDPE	HIGH DENSITY POLYETHYLENE
	HDW	HARDWARE
	HDWL	HEADWALL
	HEF	HOOD EXHAUST FAN
	HGT	HEIGHT
	HORIZ	HORIZONTAL
	HP	HEAT PUMP, HORSEPOWER, HIGH PRESSURE
	HPA	HIGH PRESSURE AIR
	HPT	HIGH POINT
	HPU	HEAT PUMP UNIT AIR
	HR	HANDRAIL, HOSE REEL, HOUR
	HSF	HOOD SUPPLY FAN
	HSS	HOLLOW STRUCTURAL SECTION (STEEL)
	HTX	HEAT EXCHANGER
	HV	HOSE VALVE
	HW	HOT WATER
	HWL	HIGH WATER LEVEL
	HxW	HEIGHT BY WIDTH
	HYD	HYDRANT
I		
	IA	INSTRUMENT AIR
	ID	INSIDE DIAMETER, INSIDE DIMENSION, IDENTIFICATION
	I.F.	INSIDE FACE
	IN or "	INCHES
	INCL	INCLUDE, INCLUDING
	INF	INFLUENT
	INJ	INJECTOR
	INSTR	INSTRUMENTATION
	INSUL	INSULAT(E)(ED)(ING)(ION)
	INT	INTERIOR
	INV	INVERT
	IP	IRON PIPE
	ISR	INTRINSICALLY SAFE RELAY
J		
	JST	JOIST
	JT	JOINT
K		
	KGV	KNIFE GATE VALVE
L		
	L	ANGLE (STRUCTURAL), LENGTH, LOUVER
	LAV	LAVATORY
	LB(S)	POUND(S)
	LF	LINEAL FEET
	LG	LONG
	LH	LEFT HAND
	LHR	LEFT HAND REVERSE
	LHRA	LEFT HAND REVERSE ACTIVE
	LHRB	LEFT HAND REVERSE BEVEL
	LL	LIVE LOAD
	LLH	LONG LEG HORIZONTAL
	LLV	LONG LEG VERTICAL
	LP	LOW PRESSURE
	LPA	LOW PRESSURE AIR
	LPT	LOW POINT
	LR	LONG RADIUS
	LS	LAB SINK
	LT	LEFT
	LWL	LOW WATER LEVEL
M		
	M	MOTOR
	MAINT	MAINTENANCE
	MAN	MANUAL
	MASY	MASONRY
	MATL	MATERIAL
	MAU	MAKE-UP AIR UNIT
	MAX	MAXIMUM
	MB	MACHINE BOLT
	MC	MECHANICAL COUPLING
	MCJ	MASONRY CONTROL JOINT
	MD	MOTORIZED DAMPER
	MECH	MECHANICAL
	MET	METAL
	MFR	MANUFACTURER
	MG/L	MILLIGRAMS PER LITER
	MGD	MILLION GALLONS PER DAY
	MH	MANHOLE
	MIN	MINIMUM
	MISC	MISCELLANEOUS
	MIX	MIXER
	MJ	MECHANICAL JOINT
	MK	MARK
	MO	MASONRY OPENING
	MOD	MODIFIED
	MOIST	MOISTURE
	MON	MONUMENT
	MOS	MOISTURE SEPARATOR
	MPM	METERING PUMP
	MS	MOP SINK
	MTD	MOUNTED
N		
	N	NORTH, NEUTRAL
	NA	NOT APPLICABLE
	NC	NORMALLY CLOSED
	NEV	VALVE, NEEDLE
	NG	NATURAL GRADE, NATURAL OR LP GAS
	NIC	NOT IN CONTRACT
	NO. #	NUMBER
	NOM	NOMINAL
	NPT	NATIONAL PIPE THREAD
	NPW	NON-POTABLE WATER
	NS	NEAR SIDE
	NTS	NOT TO SCALE
O		
	O	OPEN
	OBD	OPPOSED BLADE DAMPER
	OC	ON CENTER
	OD	OUTSIDE DIAMETER, OUTSIDE DIMENSION
	OED	OPEN EQUIPMENT DRAIN
	O.F.	OUTSIDE FACE
	OFL	OVERFLOW
	OPNG	OPENING
	OPP	OPPOSITE
	OPP HND	OPPOSITE HAND
	OZ	OUNCE
P		
	P	POLE
	PC	POINT OF CURVATURE
	PCC	PLANT CONTROL CENTER
	PCCP	PRESTRESSED CONCRETE CYLINDER PIPE
	PCP	PROGRESSIVE CAVITY PUMP
	PD	POSITIVE DISPLACEMENT, PLANT DRAIN
	PD, PLD	PULSATION DAMPENER
	PDP	POSITIVE DISPLACEMENT PUMP
	PE	PLAIN END
	PERP	PERPENDICULAR
	PG	PRESSURE GAUGE
	PH	PHASE, PHYSICALLY HANDICAPPED
	PI	POINT OF INTERSECTION
	PIV	POST INDICATOR VALVE
	PL	PLATE, PROPERTY LINE
	PLAS	PLASTIC
	PLCS	PLACES
	PLS	POLYMER SOLUTION
	PLWD	PLYWOOD
	PMP	PUMP
	PNL(S)	PANEL(S)
	POL	POLYMER
	POLY	POLYETHYLENE
	POS	POSITION
	POW	POTABLE WATER
	PP	POWER POLE
	PPMV	PARTS PER MILLION (VOLUME)
	PRC	POINT OF REVERSE CURVATURE
	PREFAB	PREFABRICATED
	PRG	PRESSURE REGULATOR
	PRI	PRIMARY
	PROJ	PROJECTION
	PRR	PRESSURE OR VACUUM RELIEF VALVE
	PRV	PRESSURE REDUCING VALVE, PRESSURE REGULATION VALVE, PRESSURE RELIEF VALVE
	PS	PUMP STATION, PIPE SUPPORT
	PSF	POUNDS PER SQUARE FOOT
	PSG	PRESSURE GAUGE
	PSI	POUNDS PER SQUARE INCH
	PSIG	POUNDS PER SQUARE INCH GAUGE
	PT	POINT, POINT OF TANGENCY
	PV	PLUG VALVE
	PVC	POINT OF VERTICAL CURVATURE, POLYVINYL CHLORIDE
	PVDF	POLYVINYLIDENE FLUORIDE
	PVI	POINT OF VERTICAL INTERSECTION
	PVMT	PAVEMENT
	PVT	POINT OF VERTICAL TANGENCY
	PLW	PLANT WATER
Q		
	QTY	QUANTITY
R		
	R/W	RIGHT OF WAY
	RAD	RADIUS, RADIAL
	RAS	RETURN ACTIVATED SLUDGE
	RCP	REINFORCED CONCRETE PIPE
	RCCP	REINFORCED CONCRETE CYLINDER PIPE
	RD	ROOF DRAIN
	RDL	ROOF DRAIN LINE
	RDOF	ROOF DRAIN OVERFLOW
	RECIRC	RECIRCULATING
	RED	REDUCER, ROOF EQUIPMENT DRAIN
	REF	REFERENCE
	REG	REGULATOR, REGULATING
	REINF	REINFORCE(D)(ING)(MENT)
	REJ	RUBBER EXPANSION JOINT
	REQD	REQUIRED
	RER	REACTOR
	RES	RESERVOIR
	REV	REVISION, REVERSE
	RH	RIGHT HAND
	RHR	RIGHT HAND REVERSE
	RHRA	RIGHT HAND REVERSE ACTIVE
	RHRB	RIGHT HAND REVERSE BEVEL
	RLS	REGISTERED LAND SURVEYOR
	RM	ROOM
	RO	ROUGH OPENING
	ROT	ROTAMETER
	RP	RADIUS POINT
	RPM	REVOLUTIONS PER MINUTE
	RPMP	REINFORCED PLASTIC MORTAR PIPE
	RR	RETURN REGISTER
	RSR	RISER
	RT	RIGHT
	RTF	ROTARY FEEDER
	RTU	ROOF TOP UNIT
	RUD	RUPTURE DISK
	RWW	RAW WASTEWATER
S		
	S/W	SIDEWALK
	S	SOUTH, SWITCH, SLOPE
	SA	SAMPLE
	SC	SECONDARY CLARIFIER
	SCB	SCRUBBER
	SCD	SMOKE CONTROL DAMPER
	SCFM	STANDARD CUBIC FEET PER MINUTE
	SCH	SCHEDULE
	SCO	SURFACE CLEANOUT
	SCR	BAR SCREEN
	SCR	SILICON CONTROL RECTIFIER
	SD	SMOKE DETECTOR, SPLITTER DAMPER, STORM DRAIN
	SDL	SUMP DISCHARGE DRAIN LINE
	SEC	SECONDARY, SECOND
	SECT	SECTION
	SED	SEDIMENTATION
	SEP	SEPTAGE
	SF	SUPPLY FAN
	SG	SUPPLY GRILLE
	SGS	STORE FRONT GLAZING SYSTEM
	SHD	SHOWER DRAIN
	SHR	SHOWER
	SHT	SHEET
	SIM	SIMILAR
	SK	SKIMMINGS
	SL	SLOPE, SLUDGE
	SLC	SLUDGE COLLECTOR DRIVE
	SLG	SLIDE GATE
	SLV	SLEEVE VALVE
	SMP	SAMPLER, SUMP PUMP
	SN	SUPERNATANT OR SUBNATANT
	SOL	SOLUTION
	SP	STATIC PRESSURE, SET POINT
	SPD	SUMP PUMP DRAIN
	SPDT	SINGLE POLE DOUBLE THROW
	SPEC(S)	SPECIFICATION(S)
	SPL	SPLITTER BOX
	SPR	SPARE
	SPS	SAMPLE SINK
	SPW	SAMPLE WATER
	SQ	SQUARE
	SQ FT	SQUARE FEET
	SQ IN(S)	SQUARE INCH(ES)
	SR	SHORT RADIUS, SUPPLY REGISTER
	SRL	SCRUBBER RECIRCULATION LIQUID (CAUSTIC)
	SS	SANITARY SEWER, SELECTOR SWITCH
	SSK	SERVICE SINK
	SSL	SECONDARY SLUDGE
	SST	STAINLESS STEEL
	ST	SLUDGE TRANSFER
	STA	STATION
	STB	STABILIZER
	STD(S)	STANDARDS(S)
	STIFF	STIFFENER
	STIR	STIRRUPS
	STL	STEEL
	STM	STEAM
	STP	STEEL PIPE
	STR	STRAINER
	STRUCT	STRUCTURAL
	SUG	SLUICE GATE
	SUPT	PIPE SUPPORT, SUPPORT
	SV	SERVICE VALVE, SHUTOFF VALVE, SOLENOID VALVE
	SW	SANITARY WASTE
	SWR	SEAL WATER
	SYM	SYMMETRICAL
	SYN	SYNTHETIC
T		
	T	TANGENT LENGTH, THERMOSTAT, TIMER
	T&B	TOP AND BOTTOM
	TAS	THREADED ANCHOR STUD
	TBM	TEMPORARY BENCHMARK
	TC	TOP OF CURB
	TCV	TEMPERATURE CONTROL VALVE
	TDH	TOTAL DYNAMIC HEAD
	TDR	TIME DELAY RELAY, TOWEL DISPENSER/RECEPTACLE
	TEL	TELEPHONE
	TH	TEST HOLE
	THK	THICKENER, THICKNESS, THICK
	TKS	THICKENED SLUDGE
	TLV	TELESCOPING VALVE
	TMH	TELEPHONE MANHOLE
	TMP	TEMPERATURE
	TNK	TANK
	T.O.	TOP OF
	TOC	TOP OF CONCRETE
	TOG	TOP OF GRATING
	TOM	TOP OF MASONRY
	TOS	TOP OF STEEL
	T.O.W.	TOP OF WALL
	TR	TRIAD (THREE CONDUCTOR SHIELDED CABLE), TIMING RELAY
	TRD	TREAD
	TS	THICKENER SUPERNATANT OR SUBNATANT
	TSD	THICKENED SLUDGE DECANT
	TSPL	TURBIDIMETER SAMPLE
	TSTAT	THERMOSTAT
	TTB	TELEPHONE TERMINAL BOARD
	TUR	TURBINE
	TV	TURNING VANES
	TWV	THREE-WAY VALVE
	TYP	TYPICAL
U		
	UC	UNDERCUT
	UG	UNDERGROUND
	UHMWPE	ULTRA HIGH MOLECULAR WEIGHT POLYETHYLENE
	UHMW	ULTRA HIGH MOLECULAR WEIGHT
	UNO	UNLESS NOTED OTHERWISE
	US	UTILITY SINK
V		
	V	VALVE
	VAR	VARIES
	VB	VALVE BOX
	VCP	VITRIFIED CLAY PIPE
	VEC	VINYL ESTER COATING
	VERT	VERTICAL
	VFR	VOLUMETRIC FEEDER
	VG	VACUUM GAUGE, VALLEY GUTTER
	VOL	VOLUME
	VRV	VACUUM REGULATING VALVE
	VTR	VENT THROUGH ROOF
W		
	W	WEST, WIDTH
	W/	WITH
	W/O	WITHOUT
	WAS	WASTE ACTIVATED SLUDGE
	WCO	WALL CLEANOUT
	WEF	WALL EXHAUST FAN
	WF	WALL FITTING, WASH FOUNTAIN
	WH	WATER HEATER
	WI	WEIGHT INDICATOR
	WL	WALL LOUVER, WATER LEVEL
	WM	WATER METER
	WP	WEATHERPROOF, WATERPROOF
	WPT	WORKING POINT
	WRG	WEIR GATE
	WS	WATER SURFACE
	WSTP	WATERSTOP
	WT	WALK THROUGH, WEIGHT
	WTF	WATER TREATMENT FACILITY
	WTR	WATER
	WV	WATER CONTROL VALVE
	WW	WASTEWATER
	WWF	WELDED WIRE FABRIC
Y		
	Y	WYE

NOTE: ABBREVIATIONS FOR LANDSCAPING WORK ARE INCLUDED ON SHEET LG001.

SYMBOLS

TITLE MARKERS

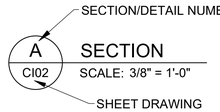

SECTION MARKERS

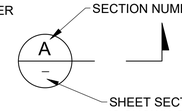

DETAIL MARKERS

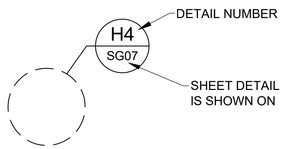

ENGINEERING
CITY OF LOS ANGELES
Environmental Engineering Division

THIS PLAN WAS ELECTRONICALLY SIGNED AND STAMPED

REGISTERED PROFESSIONAL ENGINEER JULIA CHRISTINE SCHMITT No. 84039 CIVIL STATE OF CALIFORNIA JULIA C. SCHMITT Digitally signed by Julia Christine Schmitt DN: cn=Julia Christine Schmitt, o=Carollo Engineers, ou=Civil, email=jschmitt@carollo.com, c=US Date: 2024.07.30 14:34:21 -07'00'

BUREAU OF ENGINEERING

VERTICAL CONTROL:
HORIZONTAL CONTROL:
SHEET TITLE: ABBREVIATIONS AND SYMBOLS
PROJECT: MACARTHUR LAKE STORMWATER CAPTURE PROJECT
ADDRESS: MACARTHUR PARK 2230 6TH ST LOS ANGELES CA 90057

DEPARTMENT OF PUBLIC WORKS

NO.	REVISIONS	DATE	BY

CIP NO. 1920R004
INDEX NO. D-XXXXX

DESIGN GROUP	DATE
ENGINEER: JULIA C. SCHMITT	03/14/2024
ARCHITECT:	
DESIGNED BY: CAROLLO ENGINEERS	03/14/2024
DRAWN BY: CAROLLO ENGINEERS	03/14/2024
CHECKED BY: RAPHAEL BUI & JERRY GANTNEY	03/14/2024
APPROVED BY: JULIA C. SCHMITT	07/16/2024

CITY OF LOS ANGELES

WORK ORDER
S33WMLRP, S043MSWC, S343MSWC

SHEET NAME
GI03
SHEET 3 OF 108 SHEETS

carollo

THE CITY OF LOS ANGELES OR ITS OFFICERS OR AGENTS SHALL NOT BE RESPONSIBLE FOR THE ACCURACY OR COMPLETENESS OF ELECTRONIC COPIES OF THIS PLAN SHEET.

REVISION DATES (DESIGN STAGE ONLY)

SHEET VERSION 4.0.1 FILE PATH: C:\ICS\PW_RENDITION\D0225876\20381800GI03.DWG PLOT DATE: 1/21/2026 5:19 AM SAVED: 7/31/2025 4:39 AM SAVED BY:TDIETZ

FINAL DESIGN SUBMITTAL

0.00 GENERAL NOTES

0.01 PRIOR TO START OF CONSTRUCTION, VERIFY ALL EXISTING CONDITIONS REQUIRED TO PERFORM WORK. IF CONDITIONS DIFFER FROM THOSE SHOWN ON THE DRAWINGS, NOTIFY THE ENGINEER IMMEDIATELY AND STOP WORK UNTIL DIFFERING CONDITIONS HAVE BEEN EVALUATED.

0.02 PRIOR TO START OF CONSTRUCTION, CONTRACTOR SHALL BE RESPONSIBLE TO ARRANGE AND PAY FOR A LAYDOWN AND STAGING AREA FOR THE DURATION OF THE PROJECT. THIS AREA IS NOT TO BE WITHIN THE LIMITS OF ROADWAYS. THE CONTRACTOR MAY CONDUCT DAILY WORK WITHIN THE ROADWAYS AND WORK FROM A TRUCK. THE CONTRACTOR SHALL FOLLOW ALL REGULATIONS AND GUIDELINES TO ACCESS THIS AREA AND ARRANGE FOR AND PAY ANY NECESSARY PERMITS AND INSURANCE. THIS COST IS TO BE INCLUDED IN THE BID AMOUNT. WORK WITHIN ROADWAYS WILL BE LIMITED TO AREAS IDENTIFIED WITHIN TRAFFIC CONTROL DRAWINGS.

0.03 SHOULD CONFLICTING INFORMATION BE FOUND ON THE PLANS, NOTIFY THE ENGINEER BEFORE PROCEEDING WITH THE WORK IN QUESTION.

0.04 MINIMUM SAFETY STANDARDS: COMPLY WITH ALL APPLICABLE STATE OF CALIFORNIA, DEPARTMENT OF INDUSTRIAL RELATIONS, AND DIVISION OF OCCUPATIONAL SAFETY AND HEALTH (CAL/OSHA) SAFETY STANDARDS.

0.05 TEMPORARY FACILITIES: CONTRACTOR IS RESPONSIBLE FOR ALL TEMPORARY FACILITIES INCLUDING POWER, WATER, AND SANITARY FACILITIES NEEDED FOR CONSTRUCTION.

0.06 CONTRACTOR SHALL INSTALL ADVANCED NOTICE AND CREDIT SIGNS PER CITY STANDARD PLANS S-791-1 AND S-792-0.

0.07 GRANT FUNDS SIGN:
ONE (1) SIGN SHALL BE PROVIDED FOR GRANT FUNDS. GRANT FUNDS SIGN SHALL INCLUDE COLOR LOGO AND DISCLOSURE STATEMENT FROM COUNTY OF LOS ANGELES SAFE, CLEAN WATER PROGRAM. COLOR LOGO AND DISCLOSURE STATEMENT SHALL BE EQUALLY PROMINENT ON THE SIGN. THE SIGN SHALL BE PREPARED IN A PROFESSIONAL MATTER. THE CONTRACTOR SHALL CREATE A GRANT FUNDS SIGN AT LEAST TWO (2) FEET TALL BY THREE (3) FEET WIDE MADE OF 3/4" THICK EXTERIOR GRADE PLYWOOD OR OTHER APPROVED MATERIAL IN A PROMINENT LOCATION ON THE PROJECT SITE AND SHALL MAINTAIN THE SIGN IN GOOD CONDITION FOR THE DURATION OF THE CONSTRUCTION PERIOD. THE CONTRACTOR SHALL SUBMIT A SHOP DRAWING OF THE GRANT FUNDS SIGN FOR APPROVAL. THE CONTENTS OF THE SIGN WILL INCLUDE: "FUNDING FOR THIS PROJECT HAS BEEN PROVIDED IN FULL OR IN PART FROM THE LOS ANGELES COUNTY FLOOD CONTROL DISTRICT'S SAFE, CLEAN WATER PROGRAM."

1.00 NOTICE TO CONTRACTORS

1.01 THIS IMPROVEMENT CONSISTS OF WORK CALLED FOR ONLY ON THIS PLAN.

1.02 INSPECTION: ALL WORK AND MATERIALS SHALL BE INSPECTED BY THE INSPECTOR OF PUBLIC WORKS DURING CONSTRUCTION PURSUANT TO LATEST EDITION OF "STANDARD SPECIFICATIONS FOR PUBLIC WORKS CONSTRUCTION" (GREENBOOK) AS AMENDED BY THE CITY OF LOS ANGELES DEPARTMENT OF PUBLIC WORKS "BROWN BOOK", AND THE PUBLIC WORKS CONSTRUCTION AS APPLICABLE. CALL INSPECTION DISPATCH AT (213) 485-5080 BEFORE NOON OF THE WORKING DAY BEFORE THE FIRST SCHEDULED DAY OF CONSTRUCTION.

PRIOR TO THE START OF ANY CONSTRUCTION, DEMOLITION, REMOVALS, SAWCUTTING, OR INSTALLATION OF TRAFFIC CONTROL, THE CONTRACTOR SHALL MEET WITH THE INSPECTOR TO DISCUSS SAFETY, TRAFFIC CONTROL REQUIREMENTS, PUBLIC ACCESS, CONSTRUCTION IMPACT MITIGATION, REMOVAL LIMITS, AND CONTRACTOR'S PLANNED SEQUENCING OF OPERATIONS. PRIOR TO OR AT THE PROJECT PRECONSTRUCTION MEETING THE CONTRACTOR SHALL PROVIDE THE INSPECTOR TWO (2) SETS OF FULL-SIZE PLANS AND MAINTAIN ONE (1) SET OF FULL-SIZE PLANS AT THE SITE DURING CONSTRUCTION.

1.03 THE SOILS ENGINEER IS TO APPROVE THE KEY OR BOTTOM AND LEAVE A CERTIFICATE ON THE SITE FOR THE GRADING INSPECTOR. THE GRADING INSPECTOR IS TO BE NOTIFIED BEFORE ANY GRADING BEGINS AND, FOR BOTTOM INSPECTION, BEFORE FILL IS PLACED. FILL MAY NOT BE PLACED WITHOUT APPROVAL OF THE GRADING INSPECTION.

1.04 IN CONFORMANCE WITH LOS ANGELES CITY ORDINANCE NO. 150,478 POTHOLE EXISTING SUBSURFACE INSTALLATIONS CARRYING UNSTABLE SUBSTANCES TO DETERMINE THEIR LOCATIONS AND ELEVATIONS BEFORE COMMENCING EXCAVATION.

1.05 UNDERGROUND SERVICE ALERT: BEFORE COMMENCING ANY EXCAVATION, OBTAIN AN UNDERGROUND SERVICE ALERT (USA) INQUIRY I.D. NUMBER BY CALLING 811 OR (800) 422-4133. TEN (10) WORKING DAYS SHALL BE ALLOWED AFTER THE I.D. NUMBER IS OBTAINED AND BEFORE THE CONTRACTOR STARTS THE EXCAVATION WORK SO THAT UTILITY OWNERS CAN BE NOTIFIED. IF THE UTILITY OWNER IS THE CITY OF LOS ANGELES, A CONFIRMATION NUMBER INDICATING THE CITY HAS BEEN NOTIFIED SHALL BE OBTAINED BY USA AND/OR THE CONTRACTOR FROM THE APPROPRIATE CITY DEPARTMENT. THE I.D. NUMBER TOGETHER WITH THE DATE ACQUIRED SHALL BE REPORTED TO THE BUREAU OF CONTRACT ADMINISTRATION WHEN CALLING FOR INSPECTION. I.D. NUMBERS WILL NOT BE GIVEN MORE THAN TEN (10) WORKING DAYS BEFORE STARTING EXCAVATION WORK.

1.06 AT LEAST THIRTY (30) DAYS BEFORE THE START OF CONSTRUCTION CONTACT THE BUREAU OF STREET SERVICES, COORDINATING SECTION AT (213) 847-3200 TO VERIFY THAT THERE IS NO FUTURE PROJECT OR ONGOING CONSTRUCTION WITHIN THE PROJECT SITE.

1.07 NOTIFICATION: AT LEAST TEN (10) DAYS BEFORE THE START OF CONSTRUCTION, NOTIFY, IN WRITING, ABUTTING PROPERTY OCCUPANTS OF THE PROPOSED CONSTRUCTION START DATE. A COPY OF SAID WRITTEN NOTIFICATION SHALL BE PROVIDED TO THE PUBLIC WORKS INSPECTOR FOR APPROVAL BEFORE THEY ARE DISTRIBUTED TO THE OCCUPANTS OF THE ABUTTING PROPERTY.

1.08 CONTRACTOR SHALL PREPARE TRAFFIC CONTROL PLANS FOR APPROVAL BY LADOT.

1.09 PROTECTION OF EXISTING FACILITIES: UNLESS OTHERWISE SPECIFICALLY STATED IN THESE DRAWINGS, PROTECT ALL EXISTING IMPROVEMENTS INCLUDING UTILITIES. FACILITIES DISTURBED OR DAMAGED BY THE CONTRACTOR ARE TO BE RESTORED WITH MATERIALS EQUAL OR BETTER THAN THE ORIGINAL AT THE CONTRACTOR'S EXPENSE.

1.10 ALL ELECTRICAL WORK ON THIS PROJECT WILL BE INSPECTED BY ELECTRICAL INSPECTOR - BUREAU OF CONTRACT ADMINISTRATION (BCA).

1.11 ALL PROJECT ACTIVITIES WITHIN CITY OF LOS ANGELES STORM DRAINS ARE PROHIBITED BETWEEN OCTOBER 15 AND APRIL 15 (STORM SEASON). WORK FALLING OUTSIDE THE STORM SEASON WILL BE SUBJECT TO DIVERTING A PERCENTAGE OF THE DRAIN'S DESIGN CAPACITY AS SET FORTH BY CITY OF LOS ANGELES POLICY.

2.00 EROSION & SEDIMENT CONTROL NOTES

2.01 ALL CONSTRUCTION / DEMOLITION, GRADING, AND STORAGE OF BULK MATERIALS MUST COMPLY WITH THE SOUTH COAST AIR QUALITY MANAGEMENT DISTRICT (SCAQMD) RULE 403 FOR FUGITIVE DUST.

2.02 ALL DEBRIS SHALL BE CLEANED UP DAILY AND SECURED AT THE END OF THE DAY.

2.03 PROTECT DOWNSTREAM CATCH BASINS AND SURFACE WATERS FROM CONVEYANCE OF CONSTRUCTION POLLUTANTS. MAINTAIN AND MODIFY AS NEEDED DURING CONSTRUCTION.

2.04 CONTRACTOR TO PROVIDE APPROVED SWPPP PLAN PRIOR TO EXCAVATION OR PAVEMENT REMOVAL.

3.00 SPECIFICATIONS

3.01 GENERAL:

3.01.1 ALL WORK SHALL CONFORM TO THE LATEST EDITION AND SUPPLEMENTS OF "STANDARD SPECIFICATIONS FOR PUBLIC WORKS CONSTRUCTION" (GREENBOOK), AND CORRESPONDING "ADDITIONS AND AMENDMENTS TO THE LATEST EDITION OF THE STANDARD SPECIFICATIONS FOR PUBLIC WORK CONSTRUCTION" (BROWNBOOK).

3.01.2 INSTALL MATERIALS AND EQUIPMENT IN ACCORDANCE WITH MANUFACTURER GUIDELINES UNLESS OTHERWISE NOTED ON DRAWINGS AND SPECIFICATIONS.

3.01.3 EQUAL PRODUCTS:
CONTRACTOR CAN PROVIDE "EQUAL" PRODUCTS FOR ALL MATERIALS SPECIFIED. IF EQUAL PRODUCTS ARE PROPOSED, IT IS THE CONTRACTOR'S RESPONSIBILITY TO DEMONSTRATE THAT THE PROPOSED PRODUCTS ARE EQUAL TO THE SPECIFIED PRODUCT. PRE-APPROVED MATERIALS ARE NOTED IN PARENTHESIS. "OR EQUAL PRODUCTS" ARE SUBJECT TO APPROVAL BY THE ENGINEER.

3.02 EARTHWORK:

3.02.1 NO FILL TO BE PLACED UNTIL EXCAVATION BOTTOM HAS BEEN INSPECTED AND APPROVED BY THE ENGINEER.

3.02.2 SUBGRADE PREPARATION: SCARIFY AND RE-COMPACT TOP 12 INCHES OF LOOSE OR DISTURBED SUBGRADE UNLESS OTHERWISE DIRECTED BY THE ENGINEER. FILL MAY BE PLACED DIRECTLY ON TOP OF UNDISTURBED NATIVE MATERIALS AS DETERMINED BY THE ENGINEER.

3.02.3 FILL MATERIAL: SCREENED NATIVE MATERIALS MAY BE SUITABLE FOR USE AS FILL MATERIAL. SCREENED NATIVE MATERIALS SHALL BE FREE OF ORGANIC MATTER, DELETERIOUS MATERIALS, AND ROCKS OR OTHER OBJECTS LARGER THAN 2 INCHES. SUBMIT FOR APPROVAL BY ENGINEER. CONTRACTOR SHALL RECEIVE APPROVAL OF LICENSED GEOTECHINCAL ENGINEER AND LA BOE BEFORE USING NATIVE MATERIAL FOR TRENCH BACKFILL.

3.02.4 ALL FILL SHALL BE COMPACTED TO THE FOLLOWING MINIMUM RELATIVE COMPACTION CRITERIA.

3.02.4.1 ROAD BASE: 95 PERCENT OF MAXIMUM DRY DENSITY PER STANDARD PLANS S-477-2 (TRENCH RESURFACING).

3.02.4.2 BASE MATERIAL UNDER NON-TRAFFIC AREAS: 90 PERCENT OF MAXIMUM DRY DENSITY.

3.02.4.3 PLANTING SOIL: PLACE AND COMPACT WITH ADEQUATE WATER AS DIRECTED BY THE ENGINEER. PLACE SOIL 1" ABOVE FINAL DESIGN GRADE TO ALLOW FOR SETTLEMENT.

3.03 PIPE AND FITTINGS:

3.03.1 PIPE AND FITTINGS: AS SPECIFIED ON PLANS.

3.03.2 PERFORATION PATTERN (FOR PERFORATED PIPE ONLY): 1/2" DIAMETER PERFORATIONS; 3 ROWS AT 120 DEGREES APART AND 6" ON CENTER.

3.03.3 PROVIDED FITTINGS SHALL BE RESTRAINED FOR PRESSURIZED SYSTEM AS NECESSARY TO COMPLETE WORK.

3.03.4 PROVIDE MINIMUM PIPE COVER OF 42" UNLESS OTHERWISE SHOWN ON DRAWINGS.

3.03.5 PROVIDE MINIMUM PIPE SLOPE OF 1% UNLESS OTHERWISE SHOWN ON DRAWINGS.

3.04 ROCK MATERIALS:

3.04.1 GRAVEL DRAINAGE LAYER: GREENBOOK SECTION 200-1.2 1" CRUSHED ROCK.

3.04.2 CHOKER COURSE: GREENBOOK SECTION 200-1.2 3/8" CRUSHED ROCK.

3.04.3 ROAD BASE: GREENBOOK SECTION 200-2.2 CRUSHED AGGREGATE BASE.

3.04.4 PERMEABLE BASE: GREENBOOK SECTION 200-1.2 3/8" CRUSHED ROCK.

3.04.5 BEDDING: REFER TO SPECIFICATION SECTION 02310 FOR PIPE BEDDING. APPROVED WASHED SAND EXTENDED 12" ABOVE THE PIPE.

3.05 CONCRETE MATERIALS:

3.05.1 CURB, GUTTER, AND SIDEWALK: GREENBOOK SECTION 201-1 CLASS 520-C-2500.

3.05.2 REINFORCED CONCRETE PLANTER: GREENBOOK SECTION 201-1 CLASS 560-C-3250.

3.05.3 NON-SHRINK GROUT: GREENBOOK SECTION 201-7.3

3.05.4 REINFORCING STEEL: GREENBOOK SECTION 201-2.2 GRADE 40 OR 60 REINFORCING STEEL.

3.05.5 CONCRETE CURING: GREENBOOK SECTION 201-4.1 TYPE I-D MEMBRANE CURING COMPOUND.

3.05.6 PREMOLDED JOINT FILLER: GREENBOOK SECTION 201-3.2 NONEXTRUDING AND RESILIENT FILLER (BITUMINOUS).

3.05.7 BOND BREAKER: BOND BREAKER TAPE OR PLASTIC JOINT CAP.

3.05.8 JOINT SEALANT: GREENBOOK SECTION 201-3.4 TYPE "A" SEALANT (SIKA SIKAFLEX-2C NS TG LIMESTONE GRAY COLOR).

3.05.9 POLYSTYRENE JOINT FILLER ("BACKER ROD"): GREENBOOK SECTION 201-3.3.

3.05.10 PRECAST POROUS CONCRETE GUTTER: (STORMCRETE POROUS PRECAST CONCRETE PAVING SLAB)

3.05.11 CONCRETE SLURRY: GREENBOOK SECTION 201-1.1.2 CLASS 100-E-100

3.06 BITUMINOUS MATERIALS:

3.06.1 SURFACE ASPHALT CONCRETE COURSE: GREENBOOK / BROWNBOOK SECTION 203-6.4 CLASS D2-PG-64-10-RAP-15%

3.06.2 BASE ASPHALT CONCRETE COURSE: GREENBOOK / BROWNBOOK SECTION 203-6.4 CLASS B-PG-64-RAP-10-15%

4.00 CLOSED CIRCUIT TELEVISION (CCTV) INSPECTION REQUIREMENT

4.01 THE CONTRACTOR SHALL BE RESPONSIBLE FOR WORKING WITH THE BOE PERMIT DISTRICT TO OBTAIN NECESSARY PERMITS AND PROVIDING A CCTV INSPECTION OF THE EXISTING STORM AND SANITARY SEWERS IN LOCATIONS WHERE NEW DIVERSIONS OR CONNECTIONS ARE PROPOSED. THE CONTRACTOR SHALL RECORD THE INSPECTION IN A DIGITAL FORMAT PER BROWN BOOK SECTION 500-1.1.5. THE CCTV SHALL BE PERFORMED BY A BONDED SEWER CONTRACTOR, IN THE PRESENCE OF BUREAU OF CONTRACT ADMINISTRATION PERSONNEL.

4.02 PRIOR TO CCTVING, THE CONTRACTOR SHALL COMPLY WITH ALL REQUIREMENTS STIPULATED IN THE PRE/POST CCTV CHECKLIST (SEWER/STORM), AND NOTIFY THE BUREAU OF SANITATION CONTACT PERSONNEL LISTED ON THE NOTIFICATION ROSTER OF THE REQUIRED SEWAGE SPILL PREVENTION AND RESPONSE REQUIREMENTS AND NOTIFY APPROPRIATE INSPECTION OFFICE BEFORE NOON ON WORKDAY BEFORE INSPECTION IS REQUIRED AT: (213) 485-5080 OR https://bca.lacity.org/dispatch.

4.03 THE CCTV SHALL BE CONDUCTED AT TWO (2) CONSTRUCTION STAGES : PRIOR TO START OF CONSTRUCTION, AFTER THE COMPLETION OF THE PROJECT. AT EACH STAGE THE CCTV AND RECORD LOG SHALL BE SUBMITTED TO THE CITY OF LOS ANGELES FOR REVIEW AND CONFIRMATION THAT NO DAMAGE HAS OCCURRED TO THE SEWER, AND TO OBTAIN APPROVAL TO CONTINUE WITH THE NEXT CONSTRUCTION OPERATION.

4.04 VIDEO INSPECTION SHALL COVER THE ENTIRE LENGTH OF THE SEWER WITHIN THE PROJECT LIMIT OR REQUIRED REACHES PROVIDED BY WCED, AND SHALL BE DONE IN ACCORDANCE WITH THE LATEST EDITION OF CITY OF LOS ANGELES BROWN BOOK, SECTION 500.

4.05 THE CONTRACTOR SHALL COMPLETE AND SUBMIT THE PRE/POST CCTV CHECKLIST WITH THE CCTV PACKAGE TO THE DISTRICT OFFICE AND WCED.

THE CCTV PACKAGE INCLUDES CCTV, RECORD LOGS, THE CCTV PERMIT WITH INSPECTOR'S NAME AND PHONE NUMBER, DESIGN PLANS, AND RECORD OF EASEMENT ACKNOWLEDGEMENT, IF APPLICABLE. SUBMITTED CCTV AND RECORD LOGS SHALL BECOME A PROPERTY OF THE CITY. THE DISTRICT OFFICE WILL FORWARD THE COMPLETED CCTV PACKAGE TO THE CLEAN WATER COLLECTION DIVISION AT SAN.CWREVIEW@LACITY.ORG.

4.06 ANY DAMAGE REVIEWED IN THE CCTV TO THE SEWER RESULTING FROM CONSTRUCTION ACTIVITIES SHALL BE PROMPTLY REPAIRED BY THE CONTRACTOR/DEVELOPER AT THEIR COST AND TO THE SATISFACTION OF THE CITY OF LOS ANGELES, DEPARTMENT OF PUBLIC WORK, BUREAU OF ENGINEERING, WASTEWATER CONVEYANCE ENGINEERING DIVISION AND STRUCTURAL ENGINEERING DIVISION AND THE BUREAU OF SANITATION. THE DECISION OF THE AFOREMENTIONED DEPARTMENT CONCERNING THE EXTENT OF DAMAGE, AS WELL AS THE REQUIRED REPAIR METHODOLOGY IS FINAL.

4.07 CCTV FOR THIS PROJECT IS REQUIRED FOR:

SHEET NO.	U/S MH NO.	D/S MH NO.	STREET	PIPE LENGTH (FT)
101/107	5160416717101 1	5160146616103 0	S ALVARADO ST/ ALLEY/ GRADE VIEW ST	1369'
108	516-01-128	516-01-322	W 7TH ST	738'
101/108	516-01-322	516-01-809	S LAKE ST/ W 7TH ST	82'
101	516-01-097	516-01-098	ALLEY/ S LAKE ST	184'
107	516-01-095	516-01-189	S GRAND VIEW ST	225'
101	516-01-321	516-01-192	S LAKE ST/ W 8TH ST	661'
107	516-01-187	516-01-084	W 7TH ST	272'

LEGEND

- PROPERTY LINE
- RIGHT-OF-WAY LINE
- LOT LINE
- EASEMENT LINE
- SETBACK LINE
- STREET CENTERLINE
- EXISTING CHAIN LINK FENCE
- PROPOSED WOOD FENCE
- PROPOSED STORM DRAIN (SD)
- PROPOSED SANITARY SEWER (SS)
- EXISTING SEWER (S)
- EXISTING NATURAL GAS PIPE (G)
- EXISTING ELECTRICAL CONDUIT (E)
- EXISTING OVERHEAD UTILITY LINE
- EXISTING STREET LIGHT CONDUIT (SL)
- EXISTING COMMUNICATIONS LINE (COM)
- EXISTING TELEPHONE LINE (T)
- EXISTING FIBER OPTIC LINE (FO)
- EXISTING CABLE TV LINE (CATV)
- EXISTING OIL PIPE (OIL)
- EXISTING CONTOUR (501)
- PROPOSED CONTOUR (501)
- GRADING DAYLIGHT
- DRAINAGE AREA
- SUBDRAINAGE AREA
- FLOW ARROW
- CONCRETE PAVEMENT
- UNDISTURBED SOIL
- COMPACTED FILL
- STORM DRAIN MAINTENANCE HOLE
- UTILITY POLE
- SEWER MAINTENANCE HOLE
- FIRE HYDRANT
- POWER POLE
- WOODEN POST
- TREE/SHRUB
- OAK TREE

THE CITY OF LOS ANGELES OR ITS OFFICERS OR AGENTS SHALL NOT BE RESPONSIBLE FOR THE ACCURACY OR COMPLETENESS OF ELECTRONIC COPIES OF THIS PLAN SHEET.

REVISION DATES (DESIGN STAGE ONLY)

ENGINEERING
CITY OF LOS ANGELES
Environmental Engineering Division

"THIS PLAN WAS ELECTRONICALLY SIGNED AND STAMPED"

REGISTERED PROFESSIONAL ENGINEER CHRISTINE SCHMITT No. 84039 JULIA C. SCHMITT CIVIL STATE OF CALIFORNIA
Date of Julia Christine Schmitt's Signature: 1/21/2026

DEPARTMENT OF PUBLIC WORKS

NO	REVISIONS	DATE	BY

CIP NO. 1920R004

INDEX NO. D-XXXXX

BUREAU OF ENGINEERING

VERTICAL CONTROL:
HORIZONTAL CONTROL:

SHEET TITLE: NOTICE TO CONTRACTORS AND LEGEND

PROJECT: MACARTHUR LAKE STORMWATER CAPTURE PROJECT

ADDRESS: MACARTHUR PARK 2230 6TH ST LOS ANGELES CA 90057

DESIGN GROUP	DATE
ENGINEER: JULIA C. SCHMITT	03/14/2024
ARCHITECT:	
DESIGNED BY: ROB BUSS	03/14/2024
DRAWN BY: TIM DIETZ	03/14/2024
CHECKED BY: RAPHAEL BUI & JERRY GANTNEY	03/14/2024
APPROVED BY: JULIA C. SCHMITT	07/16/2024

WORK ORDER
S33WMLRP, S043MSWC, S343MSWC

SHEET NAME
GI04
SHEET 4 OF 108 SHEETS

CITY OF LOS ANGELES

carollo

SHEET VERSION 4.0.1 FILE PATH: C:\ICS\PW_RENDITION\D0225876\20381800GI04.DWG PLOT DATE: 1/21/2026 5:19 AM SAVED: 1/5/2026 5:34 AM SAVED BY:TDIETZ

FINAL DESIGN SUBMITTAL

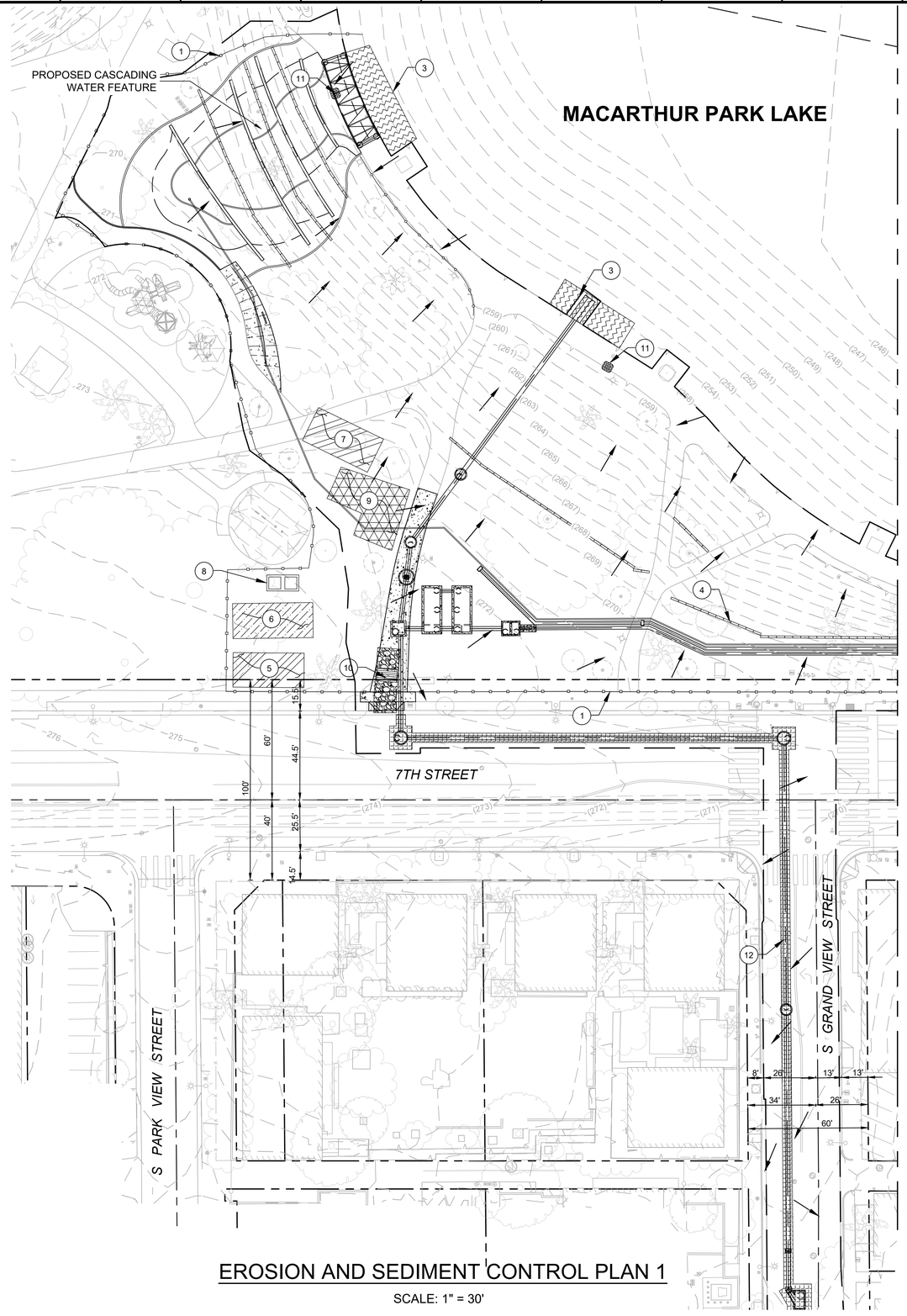

EROSION AND SEDIMENT CONTROL PLAN 1

SCALE: 1" = 30'

LEGEND:

- CONSTRUCTION FENCE AND WIND SCREEN
- SILT FENCE
- FIBER ROLLS
- STORMWATER FLOW DIRECTION
- CLEAR WATER DIVERSION
- CONSTRUCTION EQUIPMENT STORAGE AREA
- MATERIAL STORAGE AREA
- STOCKPILE AREA
- CONSTRUCTION PARKING AREA
- TRENCHING - TEMPORARY ASPHALT SEALING AND STEEL PLATES
- TEMPORARY INLET SEDIMENT FILTER BAG
- STABILIZED CONSTRUCTION ENTRANCE/EXIT
- (260) MAJOR/MINOR EXISTING CONTOUR
- LIMITS OF WORK

CONSTRUCTION NOTES:

1	INSTALL 6' HIGH CONSTRUCTION FENCE AND WIND SCREEN.
2	INSTALL SILT FENCE PER LACDPW BMP MANUAL SC-1 AND CASQA SE-1.
3	PROVIDE AND MANAGE CLEAR WATER DIVERSION PER CASQA NS-5.
4	INSTALL FIBER ROLLS PER LACDPW BMP MANUAL SC-5 AND CASQA SE-5
5	PROVIDE AND MANAGE CONSTRUCTION EQUIPMENT STORAGE AREA PER CASQA SC-20, SC-21, SC-22, AND SC-32. FINAL LOCATION TO BE DETERMINED BY CONTRACTOR.
6	PROVIDE AND MANAGE MATERIAL STORAGE AREA PER CASQA SD-34 AND SC-43. FINAL LOCATION TO BE DETERMINED BY CONTRACTOR.
7	PROVIDE AND MANAGE STOCKPILE AREA PER CASQA SC-33. FINAL LOCATION TO BE DETERMINED BY CONTRACTOR.
8	PROVIDE AND MANAGE PORTABLE RESTROOMS AND SECONDARY CONTAINMENT PER CASQA SC-31. FINAL LOCATION TO BE DETERMINED BY CONTRACTOR.
9	PROVIDE AND MANAGE CONSTRUCTION PARKING AREA PER CASQA SC-20, SC-21, SC-22, AND SC-43. FINAL LOCATION TO BE DETERMINED BY CONTRACTOR.
10	INSTALL STABILIZED CONSTRUCTION ENTRANCE/EXIT PER CASQA TC-1.
11	INSTALL TEMPORARY STORM DRAIN INLET PROTECTION PER CASQA SE-10.
12	STEEL PLATES TO BE USED DURING NON CONSTRUCTION ACTIVITIES PER SPPWC S-610-26. SEE DETAIL A, SHEET CB102.

30' 0 30' 60'

SCALE: 1" = 30'

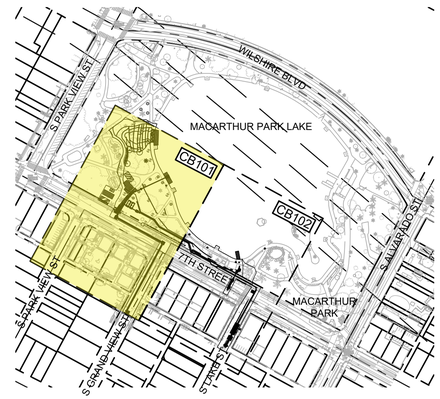

KEY MAP

NO SCALE

THE CITY OF LOS ANGELES OR ITS OFFICERS OR AGENTS SHALL NOT BE RESPONSIBLE FOR THE ACCURACY OR COMPLETENESS OF ELECTRONIC COPIES OF THIS PLAN SHEET.

REVISION DATES (DESIGN STAGE ONLY)

Environmental Engineering Design

REGISTERED PROFESSIONAL ENGINEER CHRISTINE I. SEMLOW 94417 CIVIL STATE OF CALIFORNIA

• THIS PLAN WAS ELECTRONICALLY SIGNED AND STAMPED •

BUREAU OF ENGINEERING

VERTICAL CONTROL:
HORIZONTAL CONTROL:

SHEET TITLE: EROSION AND SEDIMENT CONTROL PLAN 1

PROJECT: MACARTHUR LAKE STORMWATER CAPTURE PROJECT

ADDRESS: MACARTHUR PARK 2230 6TH ST LOS ANGELES CA 90057

DEPARTMENT OF PUBLIC WORKS

NO.	REVISIONS	DATE	BY

CIP NO. 1920R004

INDEX NO. D-XXXXX

CITY OF LOS ANGELES

DESIGN GROUP

	DATE
ENGINEER: CS	
ARCHITECT:	
DESIGNED BY: SS	
DRAWN BY: HK	
CHECKED BY: RB/JG	
APPROVED BY:	

carollo

WORK ORDER S33WMLRP, S043MSWC, S343MSWC

SHEET NAME CB101

SHEET 5 OF 108 SHEETS

SHEET VERSION 4.0.1 FILE PATH: C:\PW_WORKING\CAROLLO_200000\D0225890\20213700CB101.DWG PLOT DATE: 1/20/2026 7:25 AM SAVED: 1/19/2026 9:52 PM SAVED BY:SHANESASAKI

FINAL DESIGN SUBMITTAL

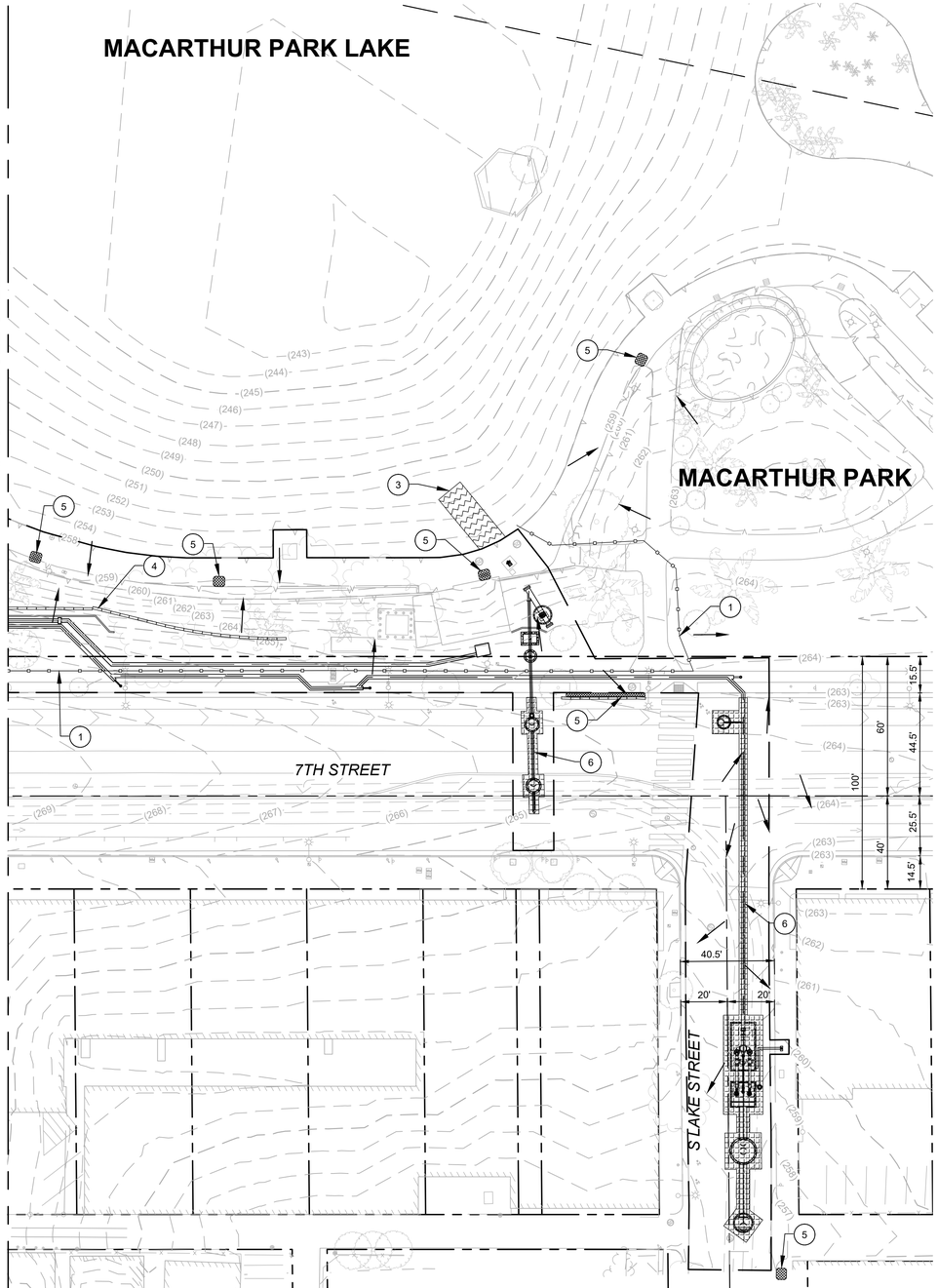

EROSION AND SEDIMENT CONTROL PLAN 2

SCALE: 1" = 30'

30' 0 30' 60'

SCALE: 1" = 30'

LEGEND:

- CONSTRUCTION FENCE AND WIND SCREEN
- SILT FENCE
- FIBER ROLLS
- STORMWATER FLOW DIRECTION
- TRENCHING - TEMPORARY ASPHALT SEALING AND STEEL PLATES
- CLEAR WATER DIVERSION
- TEMPORARY INLET SEDIMENT FILTER BAG
- (260) MAJOR/MINOR EXISTING CONTOUR
- LIMITS OF WORK

CONSTRUCTION NOTES:

1	INSTALL 6' HIGH CONSTRUCTION FENCE AND WIND SCREEN.
2	INSTALL SILT FENCE PER LACDPW BMP MANUAL SC-1 AND CASQA SE-1.
3	PROVIDE AND MANAGE CLEAR WATER DIVERSION PER CASQA NS-5.
4	INSTALL FIBER ROLLS PER LACDPW BMP MANUAL SC-5 AND CASQA SE-5
5	INSTALL TEMPORARY STORM DRAIN INLET PROTECTION PER CASQA SE-10.
6	INSTALL STEEL PLATES WITH TEMPORARY ASPHALT SEALING DURING NON CONSTRUCTION ACTIVITIES PER SPPWC S-610-26. SEE DETAIL A, THIS SHEET.

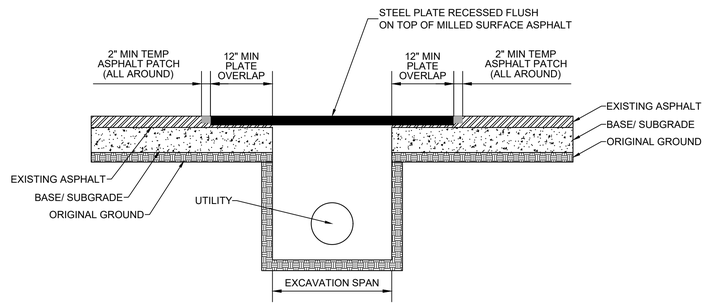

A STEEL PLATE WITH TEMPORARY ASPHALT DETAIL

NO SCALE

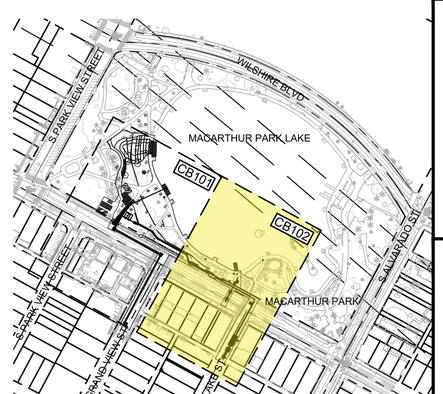

KEY MAP

NO SCALE

ENGINEERING
CITY OF LOS ANGELES
Environmental Engineering Division

THIS PLAN WAS ELECTRONICALLY SIGNED AND STAMPED

REGISTERED PROFESSIONAL ENGINEER COURTNEY SEMLOW C 94417 CIVIL STATE OF CALIFORNIA

BUREAU OF ENGINEERING

VERTICAL CONTROL:
HORIZONTAL CONTROL:

SHEET TITLE: EROSION AND SEDIMENT CONTROL PLAN 2

PROJECT: MACARTHUR LAKE STORMWATER CAPTURE PROJECT

ADDRESS: MACARTHUR PARK 2230 6TH ST LOS ANGELES CA 90057

DEPARTMENT OF PUBLIC WORKS

NO.	REVISIONS	DATE	BY

CIP NO. 1920R004

INDEX NO. D-XXXXX

craft water engineering, inc.

carollo

CITY OF LOS ANGELES

DESIGN GROUP | DATE

ENGINEER: CS
ARCHITECT:
DESIGNED BY: SS
DRAWN BY: HK
CHECKED BY: RB/JG
APPROVED BY:

WORK ORDER S33WMLRP, S043MSWC, S343MSWC

SHEET NAME CB102

SHEET 6 OF 108 SHEETS

THE CITY OF LOS ANGELES OR ITS OFFICERS OR AGENTS SHALL NOT BE RESPONSIBLE FOR THE ACCURACY OR COMPLETENESS OF ELECTRONIC COPIES OF THIS PLAN SHEET.

REVISION DATES (DESIGN STAGE ONLY)

SHEET VERSION 4.0.1 FILE PATH: C:\PW_WORKING\CAROLLO_200000\D0225890\20213700CB102.DWG PLOT DATE: 1/20/2026 7:26 AM SAVED: 1/19/2026 9:52 PM SAVED BY:SHANESASAKI

FINAL DESIGN SUBMITTAL

DESIGN WATER SURFACE TYP.

CONCRETE GRADE ADJUSTMENT CURB
TC = 268'
BC = 267.5'

APPROXIMATE LINER EXTENTS, TYP.
SEE DETAIL 1 / CS501

BEGIN 6" CONCRETE CURB ALONG EXIST CONCRETE WALK. TC ELEVATIONS TO MATCH EXIST WALK ELEVATION, TYP.
SEE SPPWC STANDARD PLAN B1-6 FOR DETAIL

(270.31 FS)

15' TRANSITION TO FLUSH CURB

270.91 TC
270.41 FG

DAYLIGHT TO GRADE, 8:1 SLOPE

LIMITS OF GRADING, TYP.

272.02 TC
271.69 FG

271.86 TC
271.53 FG

8" INFLOW ATRIUM GRATE
INV = 267.75'
SEE DETAIL 3 / CU501

MATCH EXIST CONCRETE WALK ELEVATION, TYP.

HOLD 1' FROM BOTTOM OF CURB AT -5% SLOPE, THEN BEGIN 3:1 MAX SLOPE

272.02 TC
271.69 FG

272.14 TC
271.80 FG

272.27 TC
271.94 FG

C6

MACARTHUR PARK

MATCH EXIST CONCRETE WALK ELEVATION

272.33 TC
272.00 FG

272.04 TC
271.71 FG

PROPOSED 6" DIP CASCADING WATER FEATURE SUPPLY LINE

(272.78 FS)

4" THICK CONCRETE WALK
SEE DETAIL 4 / CS501

271.95 TC
271.62 FG

272.07 TC
271.74 FG

15' TRANSITION TO FLUSH CURB

(271.81 FS)

MATCHLINE SEE SHEET CB104

CONCRETE GRADE ADJUSTMENT CURB
TC = 265'
BC = 264.5'
(TYP. EACH SIDE)

CONCRETE MOW STRIP,
SEE DETAIL 4 / LS602

CONCRETE GRADE ADJUSTMENT CURB
TC = 262'
BC = 261.5'
(TYP. EACH SIDE)

CONCRETE GRADE ADJUSTMENT CURB
TC = 259'
BC = 258.5'
(TYP. EACH SIDE)

CONCRETE TERRACE WALL 4
TW = 260' (TYP. WALL)
SEE DETAIL 2 / LS602

DAYLIGHT TO GRADE,
2:1 SLOPE MAX

(258.65 TC)
(258.15 FS)

(258.60 TC)
(258.10 FS)

(258.29 FG)

EXISTING GRATED CATCH BASIN AND SKIMMER GATE TO BE DEMOLISHED AND REMOVED. INSTALL 30° BEND TO RECONNECT EXISTING 18" PVC PERIMETER DRAINS

3 / CS501

CONCRETE GRADE ADJUSTMENT CURB
TC = 256.6'
BC = 256.1'
(TYP. EACH SIDE)

(258.29 FG)

(258.03 FG)

DAYLIGHT TO GRADE,
2:1 SLOPE MAX

(258.52 FG)

PREFABRICATED BRIDGE TO MATCH EXIST CONC WALK ELEVATION, TYP. EACH SIDE.

RELOCATE EXISTING IRRIGATION MAIN, SEE SHEET LS701.

CONCRETE TERRACE WALL 3
TW = 263' (TYP. WALL)
SEE DETAIL 2 / LS602

CONCRETE MOW STRIP
SEE DETAIL 4 / LS602

CONCRETE TERRACE WALL 2
TW = 266' (TYP. WALL)
SEE DETAIL 2 / LS602

CONCRETE TERRACE WALL 1
TW = 269' (TYP. WALL)
SEE DETAIL 2 / LS602

MACARTHUR PARK LAKE

LEGEND:

- 260 — PROPOSED CONTOUR
- (260) — EXISTING CONTOUR
- LIMITS OF GRADING
- CENTERLINE
- PROPOSED WATER LEVEL LINE
- APPROXIMATE HDPE LINER EXTENTS PIPE
- TREE PROTECTION ZONE, SEE SHEET LS100
- EXISTING TREE
- PROPOSED TREE
- 1 — CONSTRUCTION NOTE
- FG — FINISHED GRADE
- FS — FINISHED SURFACE
- TW — TOP OF WALL
- TC — TOP OF CURB
- LIMITS OF WETLAND SOIL MIX

NOTE: ALL EXCAVATION WITHIN TREE PROTECTION ZONES ARE SUBJECT TO SPECIAL REQUIREMENTS AND RESTRICTIONS. SEE TREE PROTECTION REQUIREMENTS SHEET LS100.

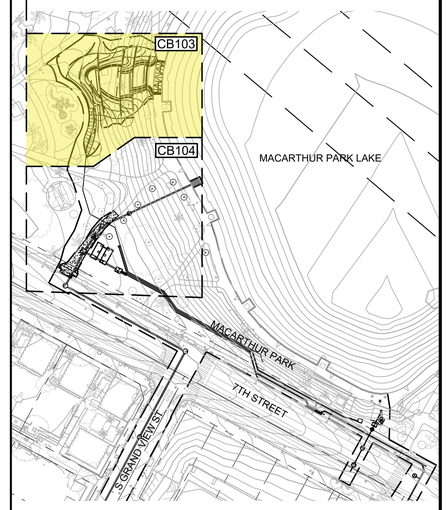

KEY MAP
NO SCALE

GRADING VOLUME SUMMARY	
EXCAVATION	2193 CY
HAULING	1041 CY
BACKFILL	1062 CY

NOTE: GRADING VOLUMES PRESENTED ABOVE ARE FOR WORK INSIDE THE PARK.

CONSTRUCTION NOTES

1. 10'-0" WIDE RECTANGULAR WEIR OPENING, INV = 268.5'
2. 3'-4" WIDE RECTANGULAR WEIR OPENING, INV = 265.5'
3. 5'-0" WIDE RECTANGULAR WEIR OPENING, INV = 262.5'
4. 10'-0" WIDE RECTANGULAR WEIR OPENING, INV = 259.5'
5. 4" PERFORATED PVC UNDERDRAIN, INV = 266.5'
6. 4" PERFORATED PVC UNDERDRAIN, INV = 263.5'
7. 4" PERFORATED PVC UNDERDRAIN, INV = 260.5'
8. 4" PERFORATED PVC UNDERDRAIN, INV = 257.5'

NOTE: FOR WEIR OPENING DETAIL SEE SHEET LS602, DETAIL 2B

LINE AND CURVE TABLE			
LINE/CURVE #	LENGTH	BEARING/DELTA	RADIUS
C1	81.56	11.05	423
C2	91.08	19.55	267
C3	88.57	17.62	288
C4	47.67	23.75	115
C5	70.63	40.25	101
C6	9.08	4.16	125
C7	66.15	81.45	47
C8	32.77	31.20	60
C9	35.97	50.13	41
C10	7.17	44.21	9
C11	9.02	26.80	19
C12	63.14	88.79	41
C13	15.98	65.93	14
L1	4.76	N86° 52' 33.33"E	

N

10' 0 10' 20'
SCALE: 1" = 10'

GRADING AND DRAINAGE PLAN 1

SCALE: 1" = 10'

THE CITY OF LOS ANGELES OR ITS OFFICERS OR AGENTS SHALL NOT BE RESPONSIBLE FOR THE ACCURACY OR COMPLETENESS OF ELECTRONIC COPIES OF THIS PLAN SHEET.

REVISION DATES (DESIGN STAGE ONLY)

ENGINEERING
CITY OF LOS ANGELES
Environmental Engineering Design

THIS PLAN WAS ELECTRONICALLY SIGNED AND STAMPED

REGISTERED PROFESSIONAL ENGINEER CHRISTINA SEMLOW 94417 CIVIL STATE OF CALIFORNIA

BUREAU OF ENGINEERING
VERTICAL CONTROL:
HORIZONTAL CONTROL:
SHEET TITLE: GRADING AND DRAINAGE PLAN 1
PROJECT: MACARTHUR LAKE STORMWATER CAPTURE PROJECT
ADDRESS: MACARTHUR PARK 2230 6TH ST LOS ANGELES CA 90057

DEPARTMENT OF PUBLIC WORKS
CITY OF LOS ANGELES

NO.	REVISIONS	DATE	BY

CIP NO. 1920R004
INDEX NO. D-XXXXX

craftwater engineering, inc.
carollo

DESIGN GROUP:
ENGINEER: CS
ARCHITECT:
DESIGNED BY: SS
DRAWN BY: HK
CHECKED BY: RBJ/JG
APPROVED BY:
DATE

WORK ORDER
S33WMLRP, S043MSWC, S343MSWC

SHEET NAME
CB103
SHEET 7 OF 108 SHEETS

SHEET VERSION 4.0.1 FILE PATH: C:\PW_WORKING\CAROLLO_200000\D0225890\20213700CB103.DWG PLOT DATE: 1/20/2026 8:23 AM SAVED: 1/19/2026 9:52 PM SAVED BY:SHANESASAKI

FINAL DESIGN SUBMITTAL

THE CITY OF LOS ANGELES OR ITS OFFICERS OR AGENTS SHALL NOT BE RESPONSIBLE FOR THE ACCURACY OR COMPLETENESS OF ELECTRONIC COPIES OF THIS PLAN SHEET.

REVISION DATES (DESIGN STAGE ONLY)

MATCHLINE SEE SHEET CB103

MACARTHUR PARK LAKE

MACARTHUR PARK

RESTORE EXISTING AC LAKE BOTTOM AROUND PROPOSED CONNECTION, SEE DETAIL 5/CS501

PROPOSED LAKE DIVERSION CONNECTION INV = 254.6 SEE DETAIL 4/CU501

254.35 FS
(258.29 TW)
(255.1 BW)

(254.00 FS)
(254.00 FS)
(254.00 FS)
(254.00 FS)

(258.12 FS)

254.35 FS
(258.21 TW)
(255.1 BW)

(258.02 FS)

MATCH EXISTING WALKWAY ELEVATION

(270.86 FS)
(270.26 FS)
(269.11 RIM)
(272.10 FS)

271.65 RIM
271.61 FS
271.31 FS
(271.22 FS)

DAYLIGHT TO GRADE AT 10:1 SLOPE MAX, TYP. EACH SIDE OF PATH

PROPOSED TREE, TYP.

(272.55 FS)
272.01 FS
272.14 RIM

LIMITS OF GRADING, TYP.

(271.53 FS)
(272.66 FS)
(272.77 FS)
(271.85 FS)
(271.99 FS)

PROPOSED ELECTRICAL PULLBOX

272.56 FS
(272.43 FS)
(272.34 RIM)

PROPOSED 6" THICK CONCRETE WALK, SEE DETAIL 4/CS501

(272.84 RIM)
273.03 FS
(272.13 RIM)
(272.57 RIM)

PROPOSED SECONDARY TREATMENT UNITS (STU1/2)

(272.74 RIM)
(272.47 RIM)
(273.43 FS)

PROPOSED PRESSURE-TO-GRAVITY TRANSITION MANHOLE (TS1)

273.28 FS
(273.37 FS)
273.15 FS
(273.30 FS)
(272.61 RIM)
(272.69 FS)
272.78 FS
(272.90 FS)

PROPOSED 6" DIP CASCADING WATER FEATURE SUPPLY LINE

272.95 FS
(272.87 FS)

PROPOSED ELECTRICAL DUCT BANK

7TH STREET

(273.09 FS)

EXISTING 6" BACKFLOW PREVENTOR TO REMAIN

(273.23 FS)
(273.09 TC)
(272.59 FS)
(272.52 FS)

PROPOSED 18" DIP DIVERSION LINE

(272.13 RIM)
(271.99 RIM)

PROPOSED 10'-WIDE CONCRETE DRIVEWAY PER LA BOE STANDARD PLAN S-440-4, CASE 2

272.94 FS
(272.38 FS)
(273.17 RIM)
(272.82 FS)
(272.85 FS)
(272.82 TC)
(272.32 FS)

GRADING AND DRAINAGE PLAN 2

SCALE: 1" = 10'

LINE AND CURVE TABLE

LINE/CURVE #	LENGTH	BEARING/DELTA	RADIUS
C1	22.68	3.02	430
C2	29.44	8.43	200
C3	75.33	19.62	220
L1	30.92	N38° 18' 31.45"E	
L2	21.66	N46° 44' 36.19"E	
L3	9.06	S46° 14' 17.48"W	

LEGEND:

- 260 — PROPOSED CONTOUR
- (260) — EXISTING CONTOUR
- LIMITS OF GRADING
- CENTERLINE
- PROPOSED WATER LEVEL LINE
- APPROXIMATE HDPE LINER EXTENTS PIPE
- TREE PROTECTION ZONE, SEE SHEET LS100
- EXISTING TREE
- PROPOSED TREE
- 1 — CONSTRUCTION NOTE
- FG FINISHED GRADE
- FS FINISHED SURFACE
- TW TOP OF WALL
- TC TOP OF CURB

NOTE: ALL EXCAVATION WITHIN TREE PROTECTION ZONES ARE SUBJECT TO SPECIAL REQUIREMENTS AND RESTRICTIONS. SEE TREE PROTECTION REQUIREMENTS SHEET LS100.

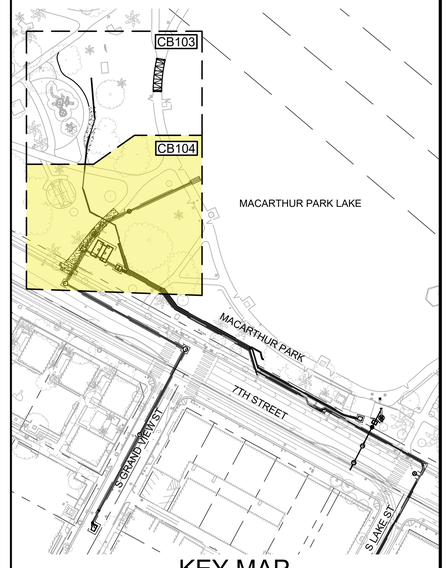

KEY MAP
NO SCALE

10' 0 10' 20'
SCALE: 1" = 10'

ENGINEERING
CITY OF LOS ANGELES
Environmental Engineering Division

THIS PLAN WAS ELECTRONICALLY SIGNED AND STAMPED

COLIN ROBERT SEMLOW — REGISTERED PROFESSIONAL ENGINEER — 94417 — CIVIL — STATE OF CALIFORNIA

BUREAU OF ENGINEERING

VERTICAL CONTROL:
HORIZONTAL CONTROL:
SHEET TITLE: GRADING AND DRAINAGE PLAN 2
PROJECT: MACARTHUR LAKE STORMWATER CAPTURE PROJECT
ADDRESS: MACARTHUR PARK 2230 6TH ST LOS ANGELES CA 90057

DEPARTMENT OF PUBLIC WORKS

NO	REVISIONS	DATE	BY

CIP NO. 1920R004
INDEX NO. D-XXXXX

craftwater engineering, inc.

carollo

CITY OF LOS ANGELES

DESIGN GROUP | DATE
ENGINEER: CS
ARCHITECT:
DESIGNED BY: SS
DRAWN BY: HK
CHECKED BY: RB/JG
APPROVED BY:

WORK ORDER
S33WMLRP, S043MSWC, S343MSWC

SHEET NAME
CB104
SHEET 8 OF 108 SHEETS

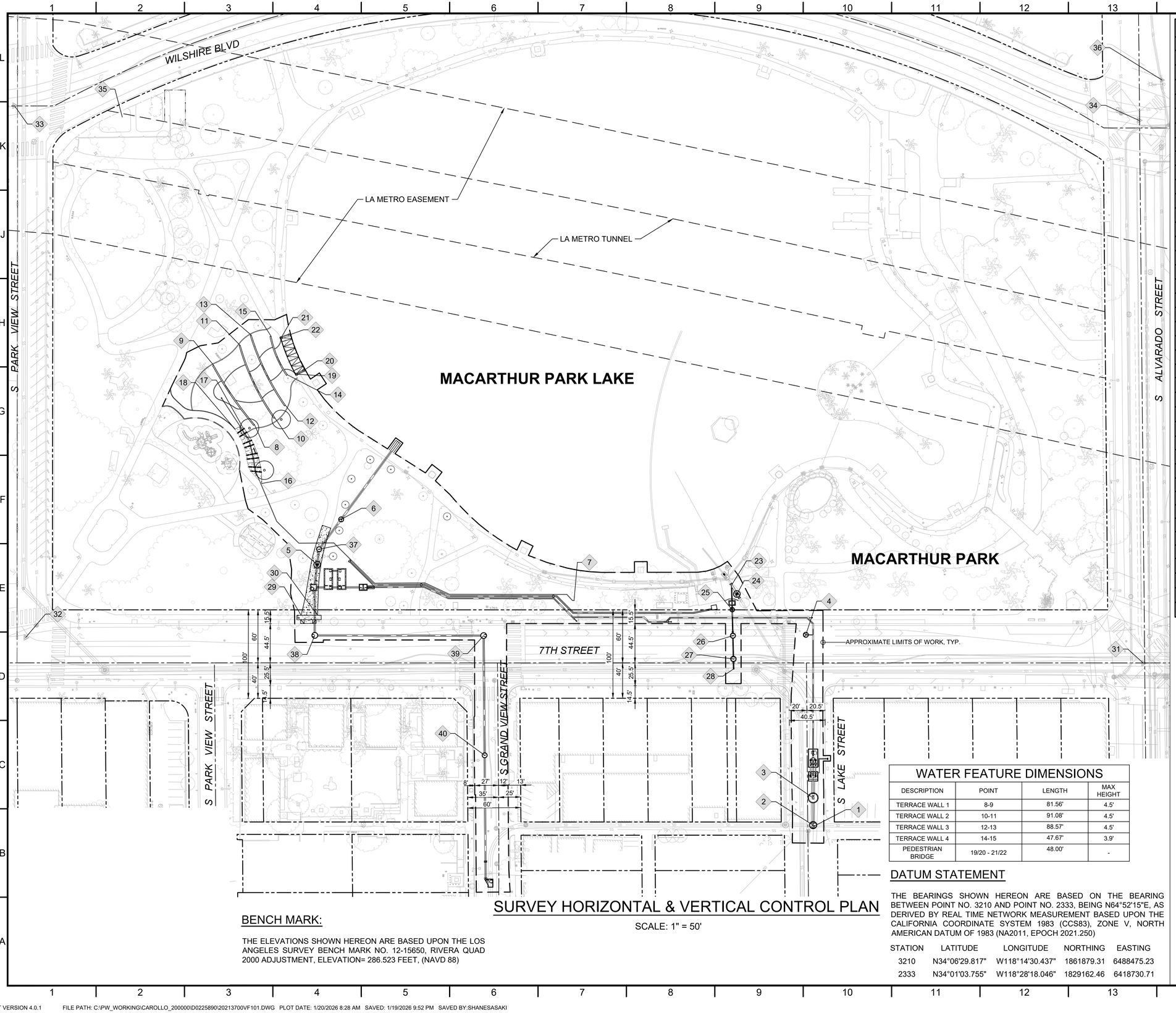

SURVEY HORIZONTAL & VERTICAL CONTROL PLAN

SCALE: 1" = 50'

POINT TABLE, PROPOSED PROJECT ELEMENTS			
POINT	DESCRIPTION	NORTHING	EASTING
1	DIVERSION STRUCTURE (CENTER MH)	1843061.15	6477401.69
2	DIVERSION STRUCTURE (DS1), CENTER	1843062.68	6477402.52
3	PRETREATMENT UNIT (PT1), CENTER	1843089.77	6477417.32
4	BLOW OFF STRUCTURE, CENTER	1843255.58	6477498.46
5	VALVE VAULT (VV1), CENTER	1843590.23	6477051.44
6	FLOW METER VAULT (MV1), CENTER	1843622.25	6477099.80
7	WATER FEATURE LINE CONNECTION	1843415.29	6477287.00
8	FRONT OF WALL, S	1843763.40	6477065.17
9	FRONT OF WALL, N	1843844.43	6477056.83
10	FRONT OF WALL, S	1843759.18	6477089.11
11	FRONT OF WALL, N	1843849.69	6477094.03
12	FRONT OF WALL, S	1843765.81	6477106.35
13	FRONT OF WALL, N	1843853.93	6477110.59
14	FRONT OF WALL, S	1843795.00	6477124.91
15	FRONT OF WALL, N	1843842.09	6477129.66
16	CORNER, PATH	1843700.95	6477040.54
17	CORNER, PATH	1843769.16	6477052.14
18	CORNER, PATH	1843769.29	6477043.57
19	SW BRIDGE PIER, CENTER	1843790.56	6477134.38
20	SE BRIDGE PIER, CENTER	1843790.39	6477143.84
21	NW BRIDGE PIER, CENTER	1843835.12	6477138.76
22	NE BRIDGE PIER, CENTER	1843833.48	6477148.62
23	WYE CONNECTION	1843345.31	6477451.87
24	VALVE VAULT (VV3), CENTER	1843333.49	6477452.44
25	FLOW METER VAULT (MV2), CENTER	1843320.47	6477439.06
26	DROP MANHOLE (MH5), CENTER	1843294.32	6477425.60
27	MANHOLE (MH6), CENTER	1843270.86	6477413.51
28	CONNECTION AT 48" SANITARY SEWER	1843260.93	6477408.40
29	CORNER, PATH	1843548.74	6477008.07
30	CORNER, PATH	1843539.87	6477024.36
31	SURVEY CONTROL POINT	1843044.37	6477818.25
32	SURVEY CONTROL POINT	1843676.08	6476722.68
33	SURVEY CONTROL POINT	1844210.19	6476999.91
34	SURVEY CONTROL POINT	1843585.87	6478108.25
35	CONTROL POINT 1" IP W/ PLASTIC CAP	1844140.31	6477100.78
36	BENCH MARK 12-15629	1843613.20	6478153.18
37	MANHOLE (MH1)	1843604.52	6477061.72
38	MANHOLE (MH2)	1843521.31	6477010.67
39	MANHOLE (MH3)	1843429.54	6477178.16
40	MANHOLE (MH4)	1843310.20	6477114.28

NOTES:
1. ALL NORTHING AND EASTING COORDINATES SHALL REFER TO THE CENTER OF STRUCTURE. SEE CIVIL UTILITY SHEETS FOR HORIZONTAL CONTROLS OF BENDS AND NON-CYLINDRICAL STRUCTURES.
2. SEE CB103 AND CB104 FOR LINE AND CURVE INFORMATION FOR PROPOSED WALKWAY, WATER FEATURE WEIR WALLS, AND MOW CURBS.
3. EXISTING UNDERGROUND UTILITIES ARE OMITTED FROM THIS PLAN FOR CLARITY.

WATER FEATURE DIMENSIONS			
DESCRIPTION	POINT	LENGTH	MAX HEIGHT
TERRACE WALL 1	8-9	81.56'	4.5'
TERRACE WALL 2	10-11	91.08'	4.5'
TERRACE WALL 3	12-13	88.57'	4.5'
TERRACE WALL 4	14-15	47.67'	3.9'
PEDESTRIAN BRIDGE	19/20 - 21/22	48.00'	-

BENCH MARK:

THE ELEVATIONS SHOWN HEREON ARE BASED UPON THE LOS ANGELES SURVEY BENCH MARK NO. 12-15650, RIVERA QUAD 2000 ADJUSTMENT, ELEVATION= 286.523 FEET, (NAVD 88)

DATUM STATEMENT

THE BEARINGS SHOWN HEREON ARE BASED ON THE BEARING BETWEEN POINT NO. 3210 AND POINT NO. 2333, BEING N64°52'15"E, AS DERIVED BY REAL TIME NETWORK MEASUREMENT BASED UPON THE CALIFORNIA COORDINATE SYSTEM 1983 (CCS83), ZONE V, NORTH AMERICAN DATUM OF 1983 (NA2011, EPOCH 2021.250)

STATION	LATITUDE	LONGITUDE	NORTHING	EASTING
3210	N34°06'29.817"	W118°14'30.437"	1861879.31	6488475.23
2333	N34°01'03.755"	W118°28'18.046"	1829162.46	6418730.71

50' 0 50' 100'
1" = 50'

craftwater engineering, inc.

carollo

ENGINEERING
CITY OF LOS ANGELES
Environmental Engineering Division

REGISTERED PROFESSIONAL ENGINEER CHRISTOPHER J. SEMLOW 94417 CIVIL CITY OF LOS ANGELES

• THIS PLAN WAS ELECTRONICALLY SIGNED AND STAMPED

BUREAU OF ENGINEERING

VERTICAL CONTROL:
HORIZONTAL CONTROL:
SHEET TITLE: SURVEY HORIZONTAL & VERTICAL CONTROL PLAN
PROJECT: MACARTHUR LAKE STORMWATER CAPTURE PROJECT
ADDRESS: MACARTHUR PARK 2230 6TH ST LOS ANGELES CA 90057

DEPARTMENT OF PUBLIC WORKS

NO	REVISIONS	DATE	BY

CIP NO. 1920R004
INDEX NO. D-XXXXX

CITY OF LOS ANGELES

DESIGN GROUP
ENGINEER:
ARCHITECT:
DESIGNED BY:
DRAWN BY:
CHECKED BY:
APPROVED BY:
DATE

WORK ORDER
S33WMLRP, S043MSWC, S343MSWC

SHEET NAME
VF101
SHEET 9 OF 108 SHEETS

FINAL DESIGN SUBMITTAL

REVISION DATES (DESIGN STAGE ONLY)

THE CITY OF LOS ANGELES OR IT'S OFFICERS OR AGENTS SHALL NOT BE RESPONSIBLE FOR THE ACCURACY OR COMPLETENESS OF ELECTRONIC COPIES OF THIS PLAN SHEET.

THE CITY OF LOS ANGELES OR ITS OFFICERS OR AGENTS SHALL NOT BE RESPONSIBLE FOR THE ACCURACY OR COMPLETENESS OF ELECTRONIC COPIES OF THIS PLAN SHEET.

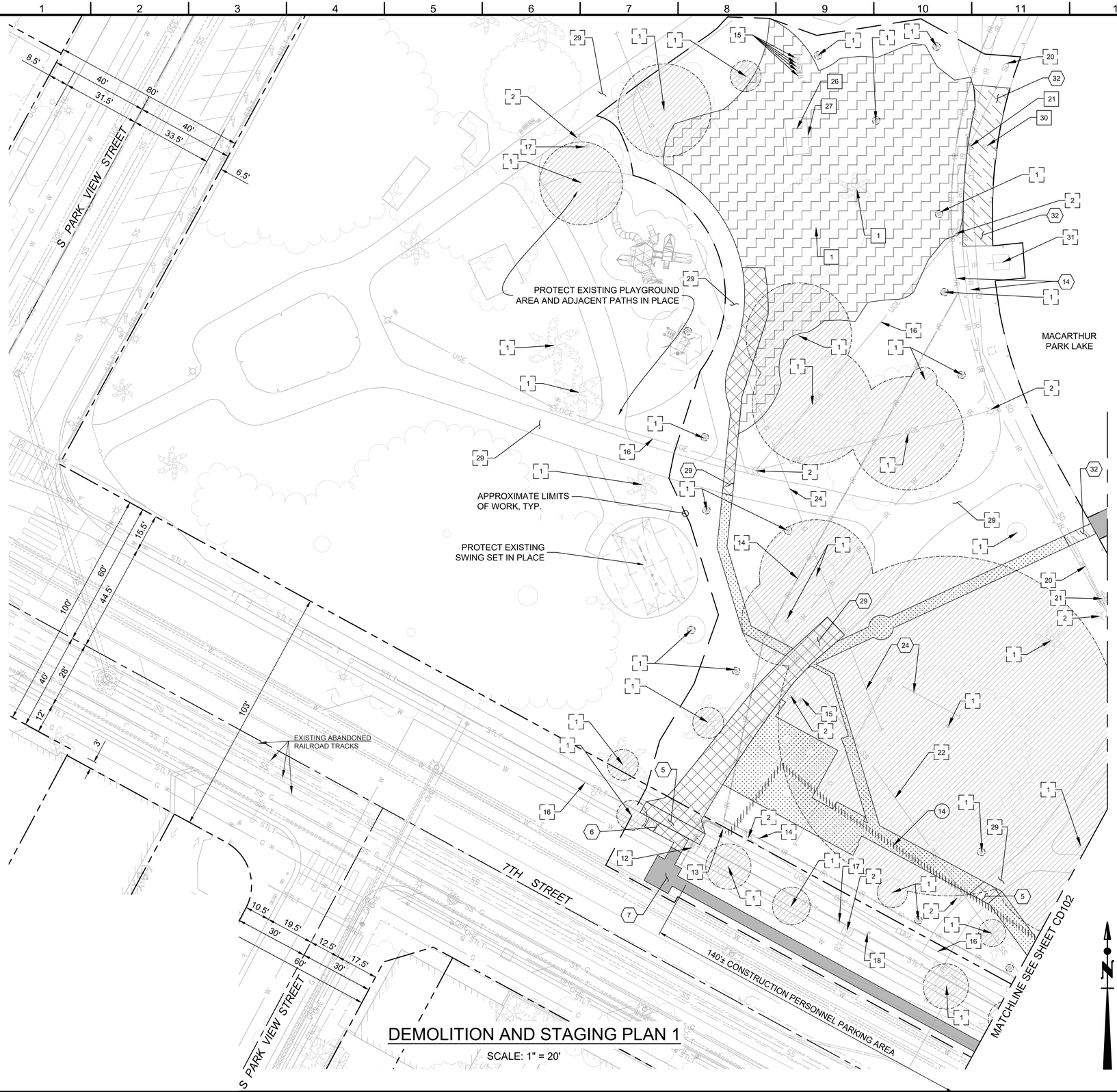

DEMOLITION AND STAGING PLAN 1

SCALE: 1" = 20'

LEGEND:

- REMOVE AND REPLACE EXISTING AC SURFACE PER CITY OF LA STANDARD PLAN S-477-2
- REMOVE AND REPLACE EXISTING CONCRETE SURFACE PER PLANS
- REMOVE AND REPLACE EXISTING GRASS
- CLEAR AND GRUB PER PLAN
- REMOVE EXISTING MONOLITHIC CONCRETE WALKWAY AND LAKE WALL (SEE NOTE 5)
- PORTIONS OF EXISTING IRRIGATION LINE TO BE DEMOLISHED AND REMOVED
- TREE PROTECTION ZONE, SEE SHEET LS100
- REMOVE
- REMOVE AND REINSTALL PER PLANS
- EXISTING - PROTECT IN PLACE
- EXISTING - ABANDON IN PLACE
- LIMITS OF WORK
- PROPERTY LINE

CONSTRUCTION NOTES:

1. TREE
2. LIGHT POLE
3. TRAFFIC SIGNAL
4. SIGN POST
5. CONCRETE SIDEWALK (SEE NOTE 4)
6. CONCRETE DRIVEWAY
7. AC PAVEMENT
8. AC PATH
9. WATER LINE
10. WATER VALVE
11. WATER METER
12. FIRE HYDRANT
13. BACKFLOW PREVENTER
14. IRRIGATION LINE
15. IRRIGATION CONTROL VALVE
16. ELECTRICAL LINE
17. ELECTRICAL BOX
18. SIGNAL BOX
19. TELECOM LINE
20. STORM DRAIN
21. CATCH BASIN
22. SANITARY SEWER LINE
23. SANITARY SEWER MANHOLE
24. GAS LINE
25. GAS LINE (ABANDONED)
26. WOODEN BENCH
27. CONCRETE SLAB
28. CONCRETE CURB
29. CONCRETE PATH
30. SLIDE GATE
31. PLANTER BOX
32. MONOLITHIC CONCRETE WALKWAY AND LAKE WALL (SEE NOTE 5)

DEMOLITION NOTES:

1. LOCATIONS OF EXISTING UTILITIES ARE APPROXIMATE AND BASED ON RECORD DRAWINGS. ACTUAL CONDITIONS MAY VARY, SEE PROJECT SPECIFICATIONS ATTACHMENTS FOR POTHOLING REPORT.
2. EXISTING UNDERGROUND UTILITIES SHALL BE PROTECTED IN PLACE DURING CONSTRUCTION UNLESS OTHERWISE NOTED ON PLAN.
3. TREES TO BE REMOVED SHALL BE TAGGED BY CONTRACTOR PRIOR TO DEMOLITION. CONTRACTOR SHALL REMOVE TREES AFTER APPROVAL FROM THE CITY OF LOS ANGELES DEPARTMENT OF RECREATION AND PARKS.
4. CONCRETE SIDEWALK SHALL BE RESTORED PER LA BOE STANDARD PLAN S-444-0.
5. EXISTING MONOLITHIC CONCRETE WALKWAY AND LAKE WALL SHALL BE RESTORED PER DETAIL 2/SB501.
6. FOR PUMP HOUSE DEMOLITION PLAN, SEE SHEET ED002.

EXISTING TREE PROTECTION NOTE:

ALL EXCAVATION WITHIN TREE PROTECTION ZONES ARE SUBJECT TO SPECIAL REQUIREMENTS AND RESTRICTIONS. SEE TREE PROTECTION REQUIREMENTS SHEET LS100.

NOTICE TO CONTRACTORS:

1. THE CONTRACTOR SHALL PREPARE AN ACCESS PLAN FOR REVIEW AND APPROVAL BY THE CITY PRIOR TO THE PLACEMENT OF ANY CONSTRUCTION FENCE. IF DURING CONSTRUCTION, THE CONSTRUCTION FENCE IS REQUIRED TO BE MOVED, A REVISED PLAN SHALL BE SUBMITTED TO THE CITY FOR REVIEW AND APPROVAL.
2. THE CONTRACTOR WILL BE WORKING ADJACENT TO EXISTING RESIDENTIAL STRUCTURES. CONTRACTOR SHALL MAINTAIN SAFE PEDESTRIAN AND VEHICULAR ACCESS TO ADJACENT PROPERTIES TO THE MAXIMUM EXTENT PRACTICABLE.
3. CONTRACTOR SHALL LIMIT PARKING RESTRICTIONS ALONG 7TH ST AND LAKE ST TO THE MAXIMUM EXTENT PRACTICABLE.

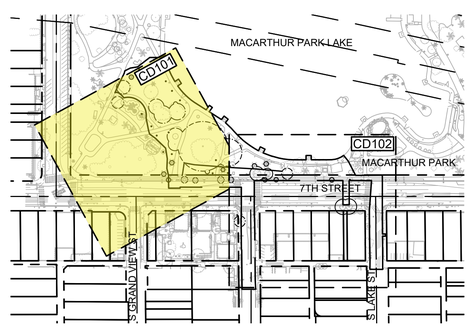

KEY MAP
NO SCALE

20' 0 20' 40'
SCALE: 1" = 20'

REVISION DATES (DESIGN STAGE ONLY)

FINAL DESIGN SUBMITTAL

SHEET VERSION 4.0.1 FILE PATH: C:\PW_WORKING\CAROLLO_200000\D0225890\20213700CD101.DWG PLOT DATE: 1/20/2026 5:47 PM SAVED: 1/20/2026 5:47 PM SAVED BY:SHANESASAKI

ENGINEERING
CITY OF LOS ANGELES
Environmental Engineering Design

THIS PLAN WAS ELECTRONICALLY SIGNED AND STAMPED

CONSULTING PROFESSIONAL ENGINEER CIVIL STATE OF CALIFORNIA C 94417 Shanesasaki

BUREAU OF ENGINEERING
VERTICAL CONTROL:
HORIZONTAL CONTROL:
SHEET TITLE: DEMOLITION AND STAGING PLAN 1
PROJECT: MACARTHUR LAKE STORMWATER CAPTURE PROJECT
ADDRESS: MACARTHUR PARK 2230 6TH ST LOS ANGELES CA 90057

DEPARTMENT OF PUBLIC WORKS
CITY OF LOS ANGELES

NO.	REVISIONS	DATE	BY

CIP NO. 1920R004
INDEX NO. D-XXXXX

craftwater engineering, inc.
carollo

DESIGN GROUP
ENGINEER: CS
ARCHITECT:
DESIGNED BY: SS
DRAWN BY: HK
CHECKED BY: RB/JG
APPROVED BY:

WORK ORDER S33WMLRP, S043MSWC, S343MSWC

SHEET NAME
CD101
SHEET 10 OF 108 SHEETS

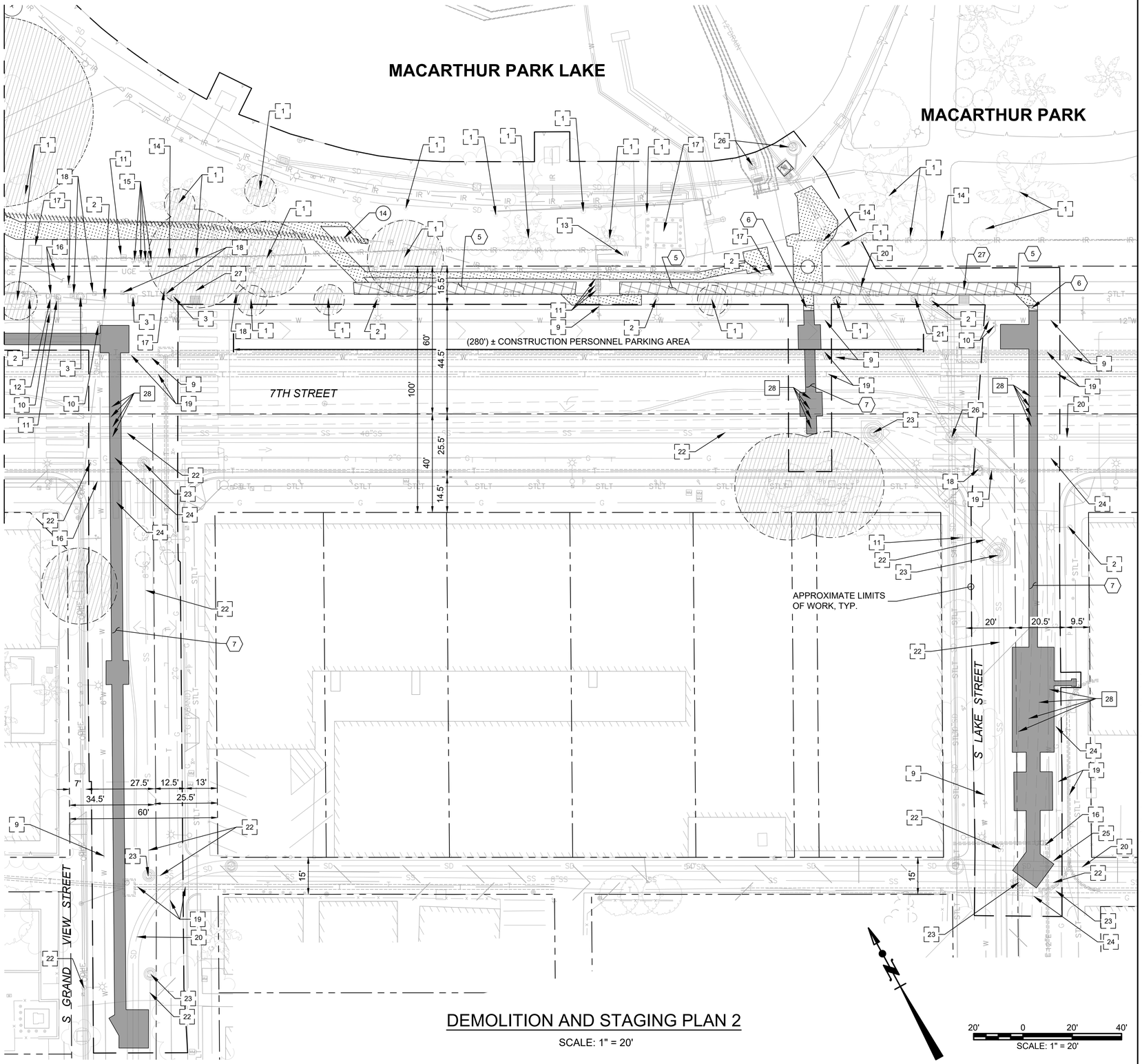

DEMOLITION AND STAGING PLAN 2

SCALE: 1" = 20'

20' 0 20' 40'

SCALE: 1" = 20'

LEGEND:

- REMOVE AND REPLACE EXISTING AC SURFACE PER CITY OF LA STANDARD PLAN S-477-2
- REMOVE AND REPLACE EXISTING CONCRETE SURFACE PER PLAN
- REMOVE AND REPLACE EXISTING GRASS
- PORTIONS OF EXISTING IRRIGATION LINE TO BE DEMOLISHED AND REMOVED
- TREE PROTECTION ZONE, SEE SHEET LS100
- REMOVE
- REMOVE AND REINSTALL PER PLANS
- EXISTING - PROTECT IN PLACE
- EXISTING - ABANDON IN PLACE
- LIMITS OF WORK
- PROPERTY LINE

CONSTRUCTION NOTES:

1. TREE
2. LIGHT POLE
3. TRAFFIC SIGNAL
4. SIGN POST
5. CONCRETE SIDEWALK (SEE NOTE 4)
6. CONCRETE CURB AND GUTTER
7. AC PAVEMENT
8. AC PATH
9. WATER LINE
10. WATER VALVE
11. WATER METER
12. FIRE HYDRANT
13. BACKFLOW PREVENTER
14. IRRIGATION LINE
15. IRRIGATION CONTROL VALVE
16. ELECTRICAL LINE
17. ELECTRICAL BOX
18. SIGNAL BOX
19. TELECOM LINE
20. STORM DRAIN
21. CATCH BASIN
22. SANITARY SEWER LINE
23. SANITARY SEWER MANHOLE
24. GAS LINE
25. GAS LINE (ABANDONED)
26. STORM DRAIN MANHOLE
27. ADA CURB RAMP (SEE NOTE 5)
28. ABANDONED RAILROAD TRACKS (SEE NOTE 7)

DEMOLITION NOTES:

1. LOCATIONS OF EXISTING UTILITIES ARE APPROXIMATE AND BASED ON RECORD DRAWINGS. ACTUAL CONDITIONS MAY VARY, SEE PROJECT SPECIFICATIONS ATTACHMENTS FOR POTHOLING REPORT.
2. EXISTING UNDERGROUND UTILITIES SHALL BE PROTECTED IN PLACE DURING CONSTRUCTION UNLESS OTHERWISE NOTED ON PLAN.
3. TREES TO BE REMOVED SHALL BE TAGGED BY CONTRACTOR PRIOR TO DEMOLITION. CONTRACTOR SHALL REMOVE TREES AFTER APPROVAL FROM THE CITY OF LOS ANGELES DEPARTMENT OF RECREATION AND PARKS.
4. CONCRETE SIDEWALK SHALL BE RESTORED PER LA BOE STANDARD PLAN S-444-0.
5. ADA CURB RAMPS DISTURBED IN THE SCOPE OF THIS PROJECT SHALL BE RESTORED TO MATCH EXISTING DIMENSIONS AND GRADES IN ACCORDANCE WITH LA BOE STANDARD PLAN S-442-6, CASE E.
6. FOR PUMP HOUSE DEMOLITION PLAN, SEE SHEET ED002.
7. REMOVE INTERFERING PORTIONS OF EXISTING ABANDONED RAILROAD TRACKS, TIES AND BALLAST ROCK. POSSIBLE HAZARDOUS SOIL MAY EXIST. REMOVE HAZARDOUS SOILS PER CITY OF LA REQUIREMENTS.

EXISTING TREE PROTECTION NOTE:

ALL EXCAVATION WITHIN TREE PROTECTION ZONES ARE SUBJECT TO SPECIAL REQUIREMENTS AND RESTRICTIONS. SEE TREE PROTECTION REQUIREMENTS SHEET LS 100.

NOTICE TO CONTRACTORS:

1. THE CONTRACTOR SHALL PREPARE AN ACCESS PLAN FOR REVIEW AND APPROVAL BY THE CITY PRIOR TO THE PLACEMENT OF ANY CONSTRUCTION FENCE. IF DURING CONSTRUCTION, THE CONSTRUCTION FENCE IS REQUIRED TO BE MOVED, A REVISED PLAN SHALL BE SUBMITTED TO THE CITY FOR REVIEW AND APPROVAL.
2. THE CONTRACTOR WILL BE WORKING ADJACENT TO EXISTING RESIDENTIAL STRUCTURES. CONTRACTOR SHALL MAINTAIN SAFE PEDESTRIAN AND VEHICULAR ACCESS TO ADJACENT PROPERTIES TO THE MAXIMUM EXTENT PRACTICABLE.
3. CONTRACTOR SHALL LIMIT PARKING RESTRICTIONS ALONG 7TH ST AND LAKE ST TO THE MAXIMUM EXTENT PRACTICABLE.

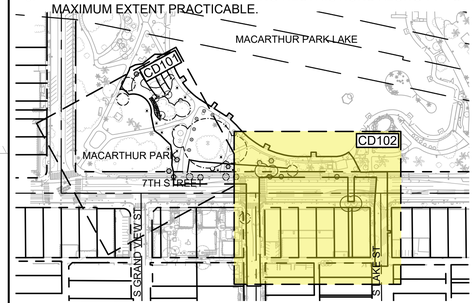

KEY MAP
NO SCALE

craft water engineering, inc.

carollo

ENGINEERING
CITY OF LOS ANGELES
Environmental Engineering Division

REGISTERED PROFESSIONAL ENGINEER CHRISTOPHER T. SEMLOW 94417 CIVIL STATE OF CALIFORNIA

• THIS PLAN WAS ELECTRONICALLY SIGNED AND STAMPED •

BUREAU OF ENGINEERING
VERTICAL CONTROL:
HORIZONTAL CONTROL:
SHEET TITLE: DEMOLITION AND STAGING PLAN 2
PROJECT: MACARTHUR LAKE STORMWATER CAPTURE PROJECT
ADDRESS: MACARTHUR PARK 2230 6TH ST LOS ANGELES CA 90057

DEPARTMENT OF PUBLIC WORKS
CITY OF LOS ANGELES

NO	REVISIONS	DATE	BY

CIP NO. 1920R004
INDEX NO. D-XXXXX

DESIGN GROUP
ENGINEER: CS
ARCHITECT:
DESIGNED BY: SS
DRAWN BY: HK
CHECKED BY: RB/JG
APPROVED BY:
DATE

WORK ORDER S33WMLRP, S043MSWC, S343MSWC

SHEET NAME
CD102
SHEET 11 OF 108 SHEETS

THE CITY OF LOS ANGELES OR ITS OFFICERS OR AGENTS SHALL NOT BE RESPONSIBLE FOR THE ACCURACY OR COMPLETENESS OF ELECTRONIC COPIES OF THIS PLAN SHEET.

REVISION DATES (DESIGN STAGE ONLY)

SHEET VERSION 4.0.1 FILE PATH: C:\PW_WORKING\CAROLLO_200000\D0225890\20213700\CD102.DWG PLOT DATE: 1/20/2026 5:47 PM SAVED: 1/20/2026 2:46 PM SAVED BY:SHANESASAKI

FINAL DESIGN SUBMITTAL

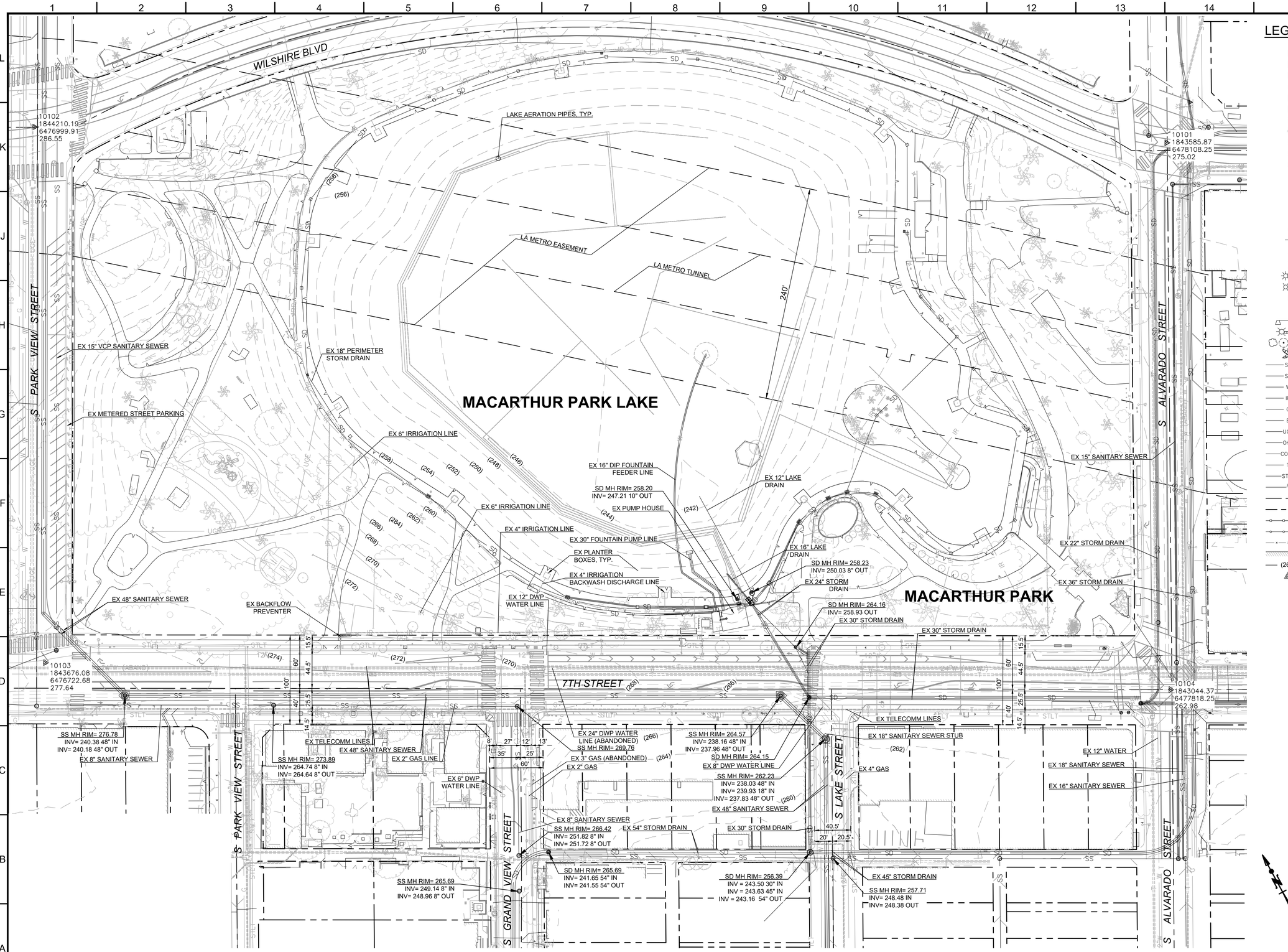

LEGEND:

- STREET LIGHT BOX
- TRAFFIC SIGNAL BOX
- WATER METER
- UTILITY METER
- ELECTRIC BOX
- GRATE INLET CATCH BASIN
- SANITARY SEWER MANHOLE
- STORM DRAIN MANHOLE
- TELECOMM MANHOLE
- ELECTRIC MANHOLE
- UTILITY MANHOLE
- BALLARD
- FIRE HYDRANT
- UTILITY VALVE
- GAS LINE VALVE
- WATER LINE VALVE
- PARKING METER
- SIGNAGE
- POWER POLE
- STREET LIGHT
- LIGHT POLE
- POWER & LIGHT POLE
- PUSH BUTTON
- TRAFFIC SIGNAL
- TRAFFIC SIGNAL POLE (OVERHANG)
- TRAFFIC LIGHT
- EXISTING TREE
- EXISTING PALM TREE
- SD — STORM DRAIN
- SS — SANITARY SEWER
- W — WATER LINE
- IR — IRRIGATION LINE
- G — GAS LINE
- E — ELECTRIC LINE
- UGE — UNDERGROUND ELECTRIC LINE
- OHE — OVERHEARD ELECTRIC LINE
- COMM — COMMUNICATION DUCT BANK
- T — TELECOMM LINE
- STLT — STREET LIGHT ELECTRIC LINE
- RETAINING WALL
- CENTERLINE
- RIGHT OF WAY/ PROPERTY LINE
- FENCE LINE
- FENCE GATE
- CHAIN LINK FENCE LINE
- BUILDING EDGES
- (260) — MAJOR/MINOR CONTOUR (EX)
- SURVEY CONTROL POINT

EXISTING CONDITIONS PLAN

SCALE: 1" = 50'

50' 0 50' 100'
1" = 50'

THE CITY OF LOS ANGELES OR ITS OFFICERS OR AGENTS SHALL NOT BE RESPONSIBLE FOR THE ACCURACY OR COMPLETENESS OF ELECTRONIC COPIES OF THIS PLAN SHEET.

REVISION DATES (DESIGN STAGE ONLY)

ENGINEERING
CITY OF LOS ANGELES
Environmental Engineering Design

REGISTERED PROFESSIONAL ENGINEER CHRISTINE I. SEMLOW 94417 CIVIL STATE OF CALIFORNIA

• THIS PLAN WAS ELECTRONICALLY SIGNED AND STAMPED

BUREAU OF ENGINEERING
VERTICAL CONTROL:
HORIZONTAL CONTROL:
SHEET TITLE: EXISTING CONDITIONS PLAN
PROJECT: MACARTHUR LAKE STORMWATER CAPTURE PROJECT
ADDRESS: MACARTHUR PARK 2230 6TH ST LOS ANGELES CA 90057

DEPARTMENT OF PUBLIC WORKS
CITY OF LOS ANGELES

NO.	REVISIONS	DATE	BY

CIP NO. 1920R004
INDEX NO. D-XXXXX

DESIGN GROUP
DATE
ENGINEER: CS
ARCHITECT:
DESIGNED BY: SS
DRAWN BY: HK
CHECKED BY: RB/JG
APPROVED BY:

craft water engineering, inc.
carollo

WORK ORDER
S33WMLRP, S043MSWC, S343MSWC

SHEET NAME
CS101
SHEET 12 OF 108 SHEETS

FINAL DESIGN SUBMITTAL

THE CITY OF LOS ANGELES OR ITS OFFICERS OR AGENTS SHALL NOT BE RESPONSIBLE FOR THE ACCURACY OR COMPLETENESS OF ELECTRONIC COPIES OF THIS PLAN SHEET.

REVISION DATES (DESIGN STAGE ONLY)

RISER AND ATRIUM GRATE INLET TO CASCADING WATER FEATURE

APPROXIMATE LOCATION, BORING B-1

PREFABRICATED PEDESTRIAN BRIDGE, SEE LANDSCAPE AND STRUCTURAL SHEETS FOR DETAILS

PROPOSED CASCADING WATER FEATURE, SEE SHEET CB103 FOR GRADING

MACARTHUR PARK LAKE

DIVERSION LINE DISCHARGE CONNECTION AT LAKE

24" DIP STORM DRAIN DIVERSION LINE: DISCHARGE TO LAKE (GRAVITY)

24" FLOW METER (MV1)

SECONDARY TREATMENT UNITS (STU1, STU2)

CASCADING WATER FEATURE SUPPLY LINE CONNECTION AT EXISTING 6" DIP IRRIGATION MAIN

6" DIP RECIRCULATION LINE TO CASCADING WATER FEATURE (PRESSURE)

PRESSURE-TO-GRAVITY TRANSITION MANHOLE (TS1)

18" DIP STORM DRAIN DIVERSION LINE (PRESSURE)

APPROXIMATE LOCATION, BORING B-2

60" PRECAST CONCRETE MANHOLE PER LA BOE STANDARD PLAN S-150-0 (MH1)

24" ACTUATED VALVE (VV1)

DISTRIBUTION STRUCTURE

NEW CONCRETE WALKWAY SEE SHEET CB104 FOR GRADING

NEW 18'-0" WIDE CONCRETE DRIVEWAY PER LA BOE STANDARD PLAN S-440-4, CASE 1

60" PRECAST CONCRETE MANHOLE PER LA BOE STANDARD PLAN S-150-0 (MH2)

24" RCP STORM DRAIN RETURN LINE (GRAVITY)

60" PRECAST CONCRETE MANHOLE PER CITY OF LA STANDARD PLAN S-150-0 (MH3)

APPROXIMATE LIMITS OF WORK, TYP.

60" PRECAST CONCRETE MANHOLE PER LA BOE STANDARD PLAN S-150-0 (MH4)

S PARK VIEW STREET

S GRAND VIEW STREET

7TH STREET

8' 27' 12' 13'

35' 25'

60'

EX 54" RCP STORM DRAIN

JUNCTION STRUCTURE CONNECTION AT EXISTING 54" STORM DRAIN

IMPROVEMENTS TO EXISTING PUMP HOUSE, SEE SHEETS MP102 AND EP001 FOR MECHANICAL AND ELECTRICAL PLANS

MACARTHUR PARK

12" ACTUATED VALVE (VV4)

12" FLOW METER (MV2)

PR ELECTRICAL DUCT BANK

NEW 16" ACTUATED VALVE IN EXISTING VALVE VAULT (VV2)

24" ACTUATED VALVE (VV3)

APPROXIMATE LOCATION, BORING B-3

12" DIP SANITARY SEWER RETURN LINE (GRAVITY)

BLOW OFF VALVE ASSEMBLY (BV1)

18" DIP STORM DRAIN DIVERSION LINE (PRESSURE)

15.5' 60' 44.5' 100' 25.5' 40' 14.5'

MODIFIED DROP MANHOLE PER LA BOE STANDARD PLAN S-148-1 (MH5)

STANDARD GAS TRAP MAINTENANCE HOLE PER LA BOE STANDARD PLAN S-139-2 (MH6)

CONNECTION AT EXISTING 48" SANITARY SEWER

40.5' 20' 20'

VALVE AND METER VAULT STRUCTURE (VMV1)

WET WELL PUMP STATION (WWPS1)

APPROXIMATE LOCATION, BORING B-4

PRETREATMENT UNIT (PT1)

DIVERSION STRUCTURE (DS1)

S LAKE STREET

EX 45" RCP STORM DRAIN

30' 0 30' 60'
SCALE: 1" = 30'

CIVIL SITE PLAN
SCALE: 1" = 30'

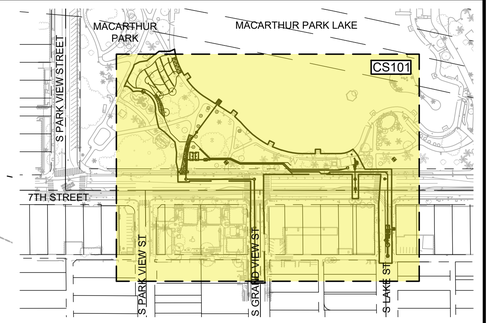

KEY MAP
NO SCALE

craft water engineering, inc.

carollo

ENGINEERING
CITY OF LOS ANGELES
Environmental Engineering Design

THIS PLAN WAS ELECTRONICALLY SIGNED AND STAMPED

REGISTERED PROFESSIONAL ENGINEER BRADLEY SAMUEL SEMLOW C 94417 CIVIL STATE OF CALIFORNIA

BUREAU OF ENGINEERING

VERTICAL CONTROL:
HORIZONTAL CONTROL:
SHEET TITLE: CIVIL SITE PLAN
PROJECT: MACARTHUR LAKE STORMWATER CAPTURE PROJECT
ADDRESS: MACARTHUR PARK 2230 6TH ST LOS ANGELES CA 90057

DEPARTMENT OF PUBLIC WORKS

NO	REVISIONS	DATE	BY

CIP NO. 1920R004

INDEX NO. D-XXXXX

CITY OF LOS ANGELES

DESIGN GROUP
ENGINEER: CS
ARCHITECT:
DESIGNED BY: SS
DRAWN BY: HK
CHECKED BY: RB/JG
APPROVED BY:
DATE

WORK ORDER S33WMLRP, S043MSWC, S343MSWC

SHEET NAME
CS102
SHEET 13 OF 108 SHEETS

FINAL DESIGN SUBMITTAL

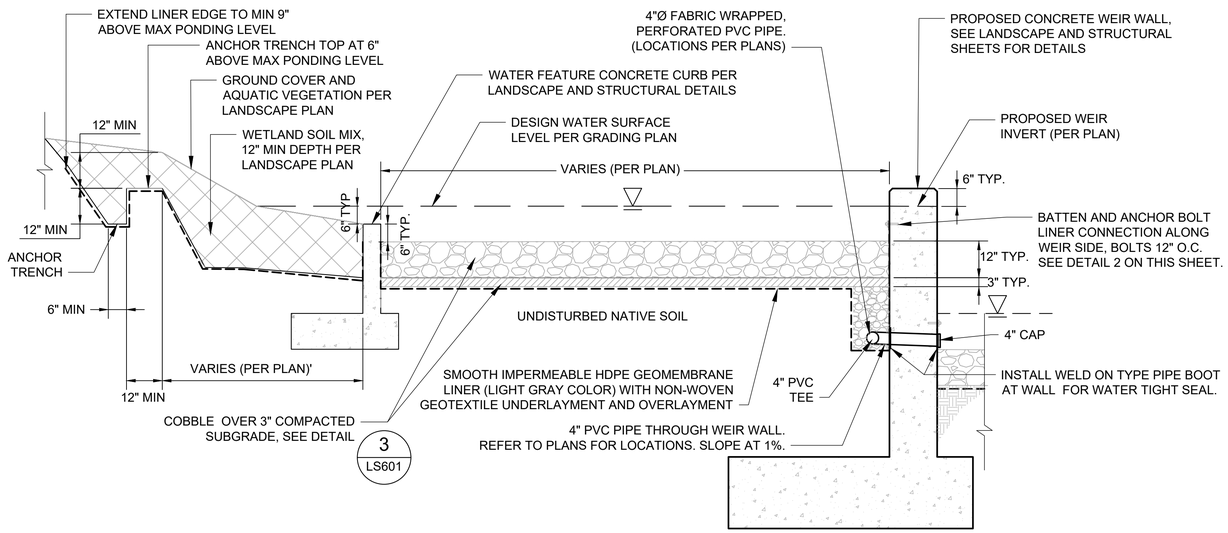

1 CS501 TYPICAL SECTION THROUGH WATER FEATURE WEIR WALLS

SCALE: NO SCALE

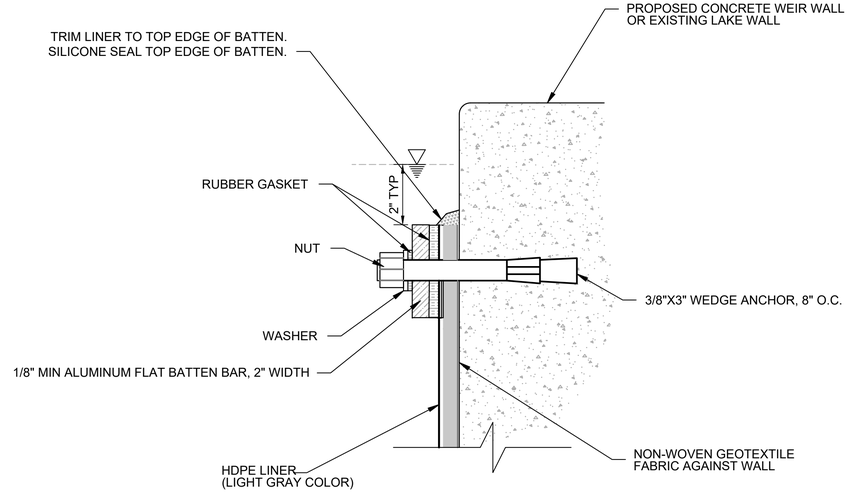

2 CS501 BATTEN ATTACHMENT DETAIL

SCALE: NO SCALE

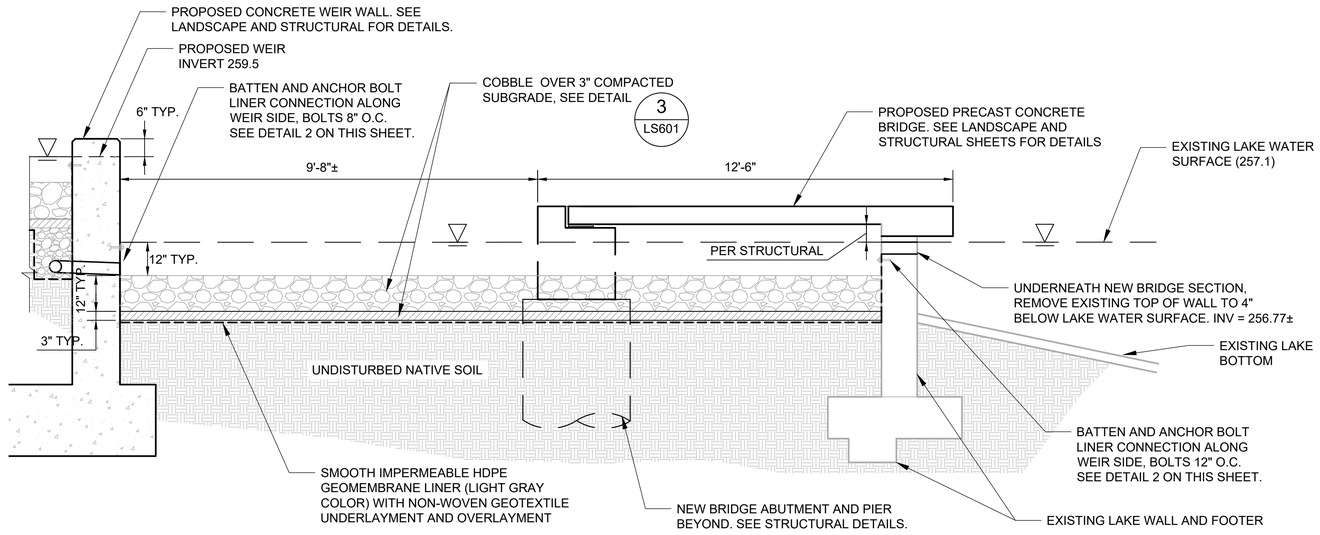

3 CS501 TYPICAL SECTION THROUGH BOTTOM TERRACE AT BRIDGE

SCALE: NO SCALE

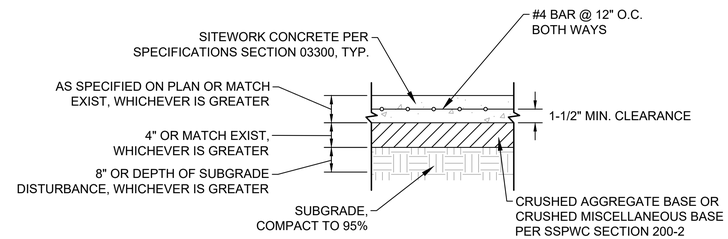

4 CS501 TYPICAL CONCRETE WALK SECTION

SCALE: NO SCALE

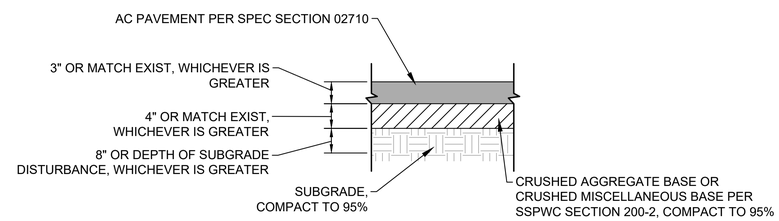

5 CS501 TYPICAL LAKE PAVEMENT SECTION

SCALE: NO SCALE

craftwater engineering, inc.

carollo

ENGINEERING
CITY OF LOS ANGELES
Environmental Engineering Division

THIS PLAN WAS ELECTRONICALLY SIGNED AND STAMPED

REGISTERED PROFESSIONAL ENGINEER CHRISTOPHER JAMES SEMLOW C 94417 CIVIL STATE OF CALIFORNIA

BUREAU OF ENGINEERING

VERTICAL CONTROL:
HORIZONTAL CONTROL:
SHEET TITLE: CIVIL SITE DETAILS 1
PROJECT: MACARTHUR LAKE STORMWATER CAPTURE PROJECT
ADDRESS: MACARTHUR PARK 2230 6TH ST LOS ANGELES CA 90057

DEPARTMENT OF PUBLIC WORKS

NO	REVISIONS	DATE	BY

CIP NO. 1920R004

INDEX NO. D-XXXXX

CITY OF LOS ANGELES

DESIGN GROUP
ENGINEER: CS
ARCHITECT:
DESIGNED BY: SS
DRAWN BY: HK
CHECKED BY: RBJ/JG
APPROVED BY:
DATE

WORK ORDER
S33WMLRP, S043MSWC, S343MSWC

SHEET NAME
CS501
SHEET 14 OF 108 SHEETS

THE CITY OF LOS ANGELES OR ITS OFFICERS OR AGENTS SHALL NOT BE RESPONSIBLE FOR THE ACCURACY OR COMPLETENESS OF ELECTRONIC COPIES OF THIS PLAN SHEET.

REVISION DATES (DESIGN STAGE ONLY)

SHEET VERSION 4.0.1 FILE PATH: C:\PW_WORKING\CAROLLO_200000\D0225890\20213700CS501.DWG PLOT DATE: 1/20/2026 7:28 AM SAVED: 1/19/2026 9:53 PM SAVED BY:SHANESASAKI

FINAL DESIGN SUBMITTAL

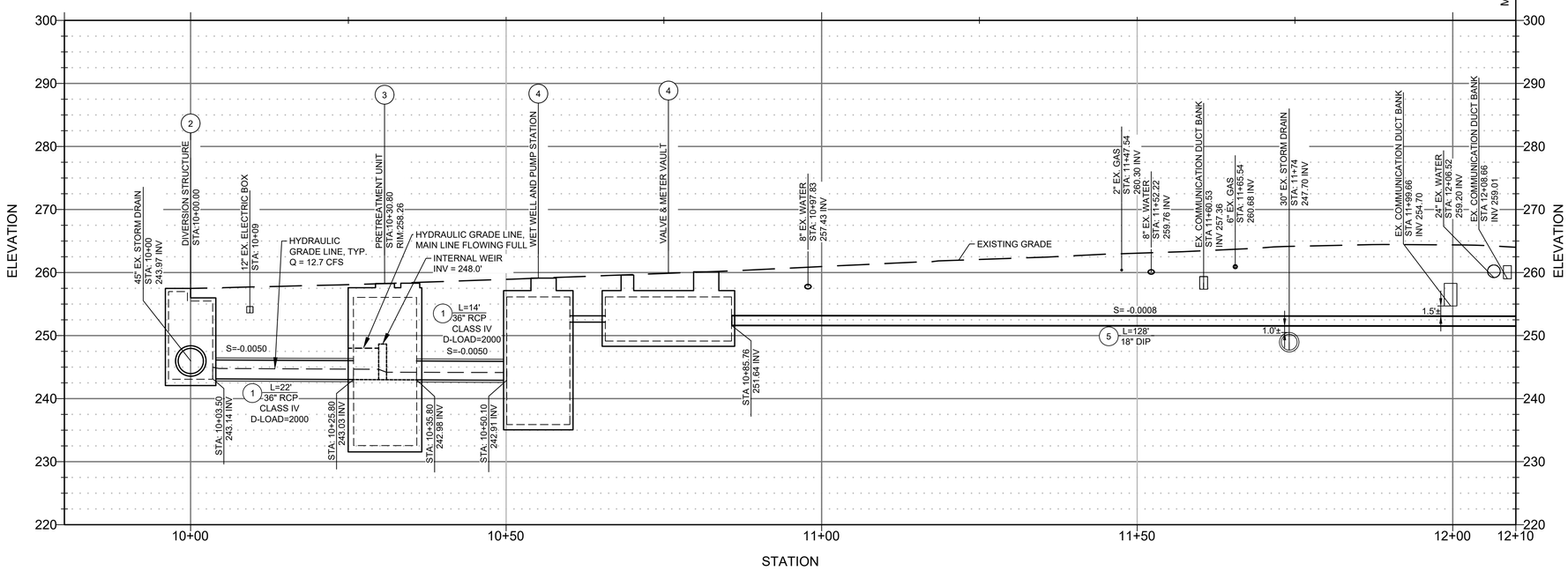

PROFILE VIEW: STORM DRAIN DIVERSION LINE (STA 10+00 TO STA 12+10)

HORIZONTAL SCALE: 1" = 10'
VERTICAL SCALE 1" = 10'

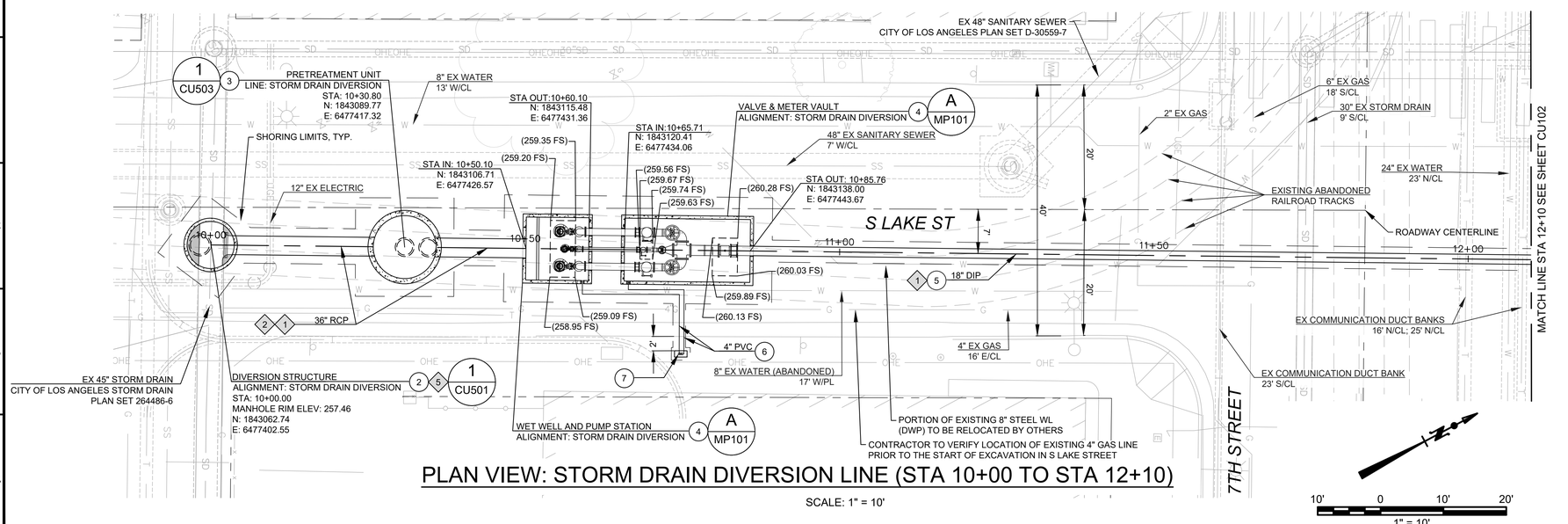

PLAN VIEW: STORM DRAIN DIVERSION LINE (STA 10+00 TO STA 12+10)

SCALE: 1" = 10'

LEGEND

- 1 — CONSTRUCTION NOTE
- 1 — KEY NOTE
- TREE PROTECTION ZONE, SEE SHEET LS100

CONSTRUCTION NOTES

1. NEW 36" RCP STORM DRAIN. SEE KEY NOTES 1 AND 2.
2. CONSTRUCT DIVERSION STRUCTURE (DS1). SEE DETAIL 1 ON SHEET CU501 AND KEY NOTE 5.
3. CONSTRUCT PRETREATMENT UNIT (PT1). SEE DETAIL 1 ON SHEET CU503.
4. CONSTRUCT WET WELL AND PUMP STATION (WWPS1) WITH VALVE & METER VAULT (VMV1). SEE SECTION A ON SHEET MP101.
5. NEW 18" DIP STORM DRAIN. SEE KEY NOTE 1.
6. NEW 4" SCHEDULE 80 PVC VENT PIPE.
7. CONSTRUCT VENT PIPE OUTLET. SEE DETAIL 2 ON SHEET CU505.

KEY NOTES

1. REFER TO CITY OF LOS ANGELES STANDARD PLANS S-251 (CASE II) FOR TRENCHING DETAIL, S-111-0 FOR SEWER HOUSE CONNECTION REMODELING DETAIL, AND S-253 FOR PIPE CROSSING SUPPORT DETAIL WHEN APPLICABLE. SEE SPECIFICATION SECTION 02310 FOR BEDDING MATERIALS.
2. REFER TO CITY OF LOS ANGELES STANDARD PLAN S-241-0 FOR REINFORCED CONCRETE PIPE DETAIL.
3. ALL EXISTING UTILITIES TO BE PROTECTED IN PLACE UNLESS OTHERWISE NOTED.
4. LOCATIONS AND INVERTS OF EX UTILITIES SHOWN IN PROFILE ARE APPROXIMATE BASED ON STANDARD BURIAL DEPTHS AND AS-BUILT DRAWINGS AND SHOULD BE VERIFIED IN THE FIELD.
5. THE CONTRACTOR IS NOTIFIED OF THE CCTV REQUIREMENTS FOR WORK ON EXISTING SEWERS. SEE CCTV NOTES SHEET GI04.

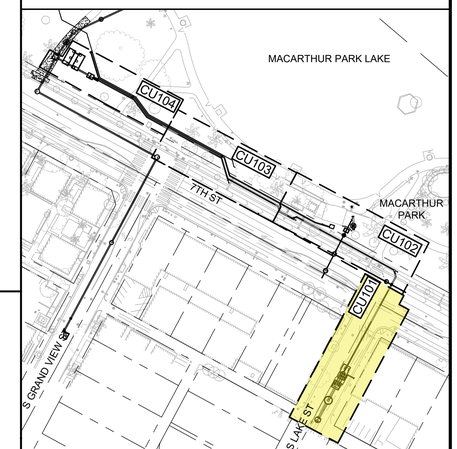

KEY MAP
NO SCALE

ENGINEERING
CITY OF LOS ANGELES
Environmental Engineering Design

THIS PLAN WAS ELECTRONICALLY SIGNED AND STAMPED

REGISTERED PROFESSIONAL ENGINEER C 94417 CIVIL STATE OF CALIFORNIA

craft water engineering, inc.

carollo

DEPARTMENT OF PUBLIC WORKS
CITY OF LOS ANGELES

BUREAU OF ENGINEERING

VERTICAL CONTROL:
HORIZONTAL CONTROL:
SHEET TITLE: PLAN & PROFILE - STORM DRAIN DIVERSION LINE STA 10+00 TO STA 12+15
PROJECT: MACARTHUR LAKE STORMWATER CAPTURE PROJECT
ADDRESS: MACARTHUR PARK 2230 6TH ST LOS ANGELES CA 90057

NO	REVISIONS	DATE	BY

CIP NO. 1920R004
INDEX NO. D-XXXXX

DESIGN GROUP
ENGINEER: CS
ARCHITECT:
DESIGNED BY: SS
DRAWN BY: HK
CHECKED BY: RBJ/JG
APPROVED BY:
DATE

WORK ORDER
S33WMLRP, S043MSWC, S343MSWC

SHEET NAME
CU101
SHEET 15 OF 108 SHEETS

FINAL DESIGN SUBMITTAL

REVISION DATES (DESIGN STAGE ONLY)

THE CITY OF LOS ANGELES OR ITS OFFICERS OR AGENTS SHALL NOT BE RESPONSIBLE FOR THE ACCURACY OR COMPLETENESS OF ELECTRONIC COPIES OF THIS PLAN SHEET.

SHEET VERSION 4.0.1 FILE PATH: C:\PW_WORKING\CAROLLO_200000\D0225890\20213700CU101.DWG PLOT DATE: 1/20/2026 7:29 AM SAVED: 1/19/2026 9:53 PM SAVED BY:SHANESASAKI

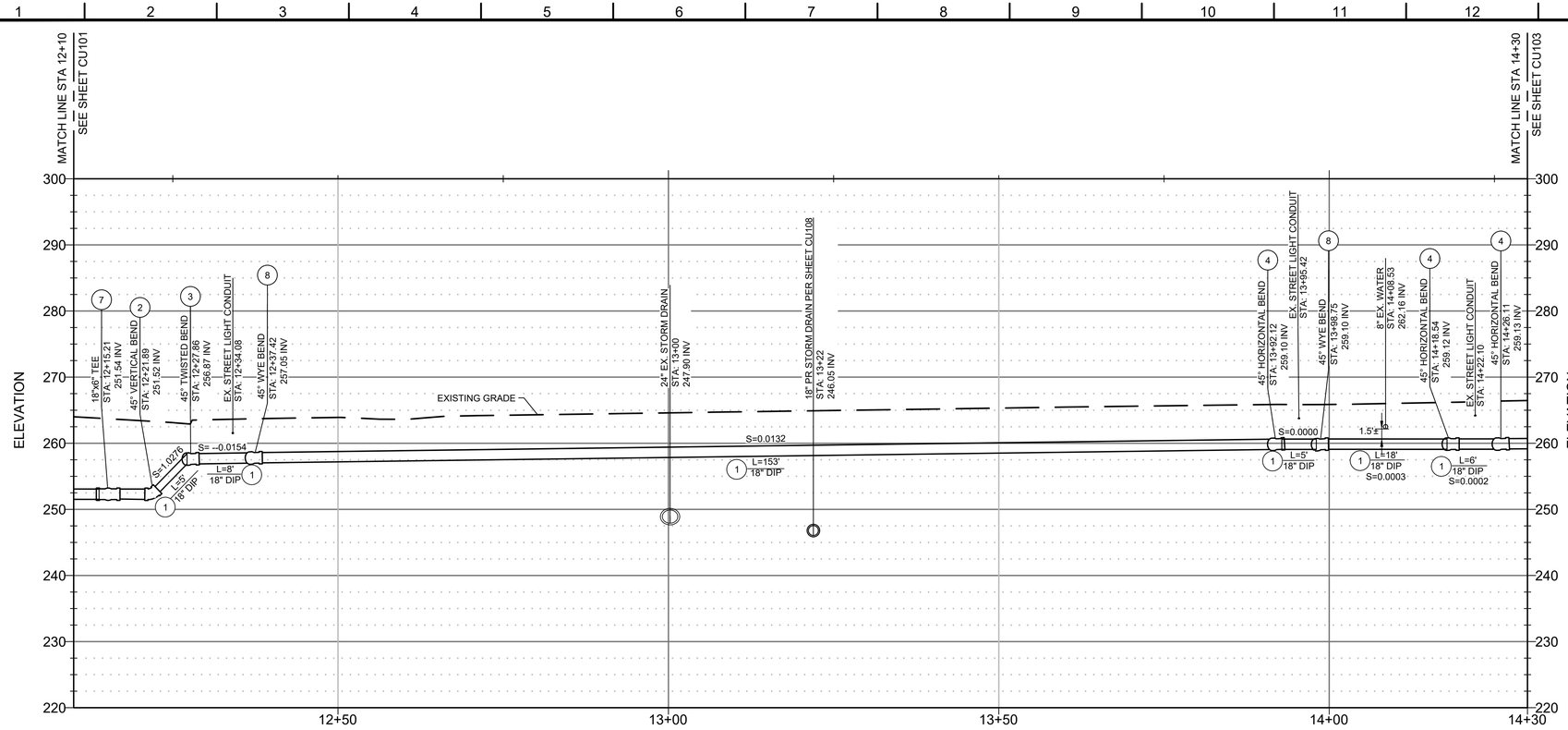

PROFILE VIEW: STORM DRAIN DIVERSION LINE (STA 12+10 TO STA 14+30)

HORIZONTAL SCALE: 1" = 10'
VERTICAL SCALE 1" = 10'

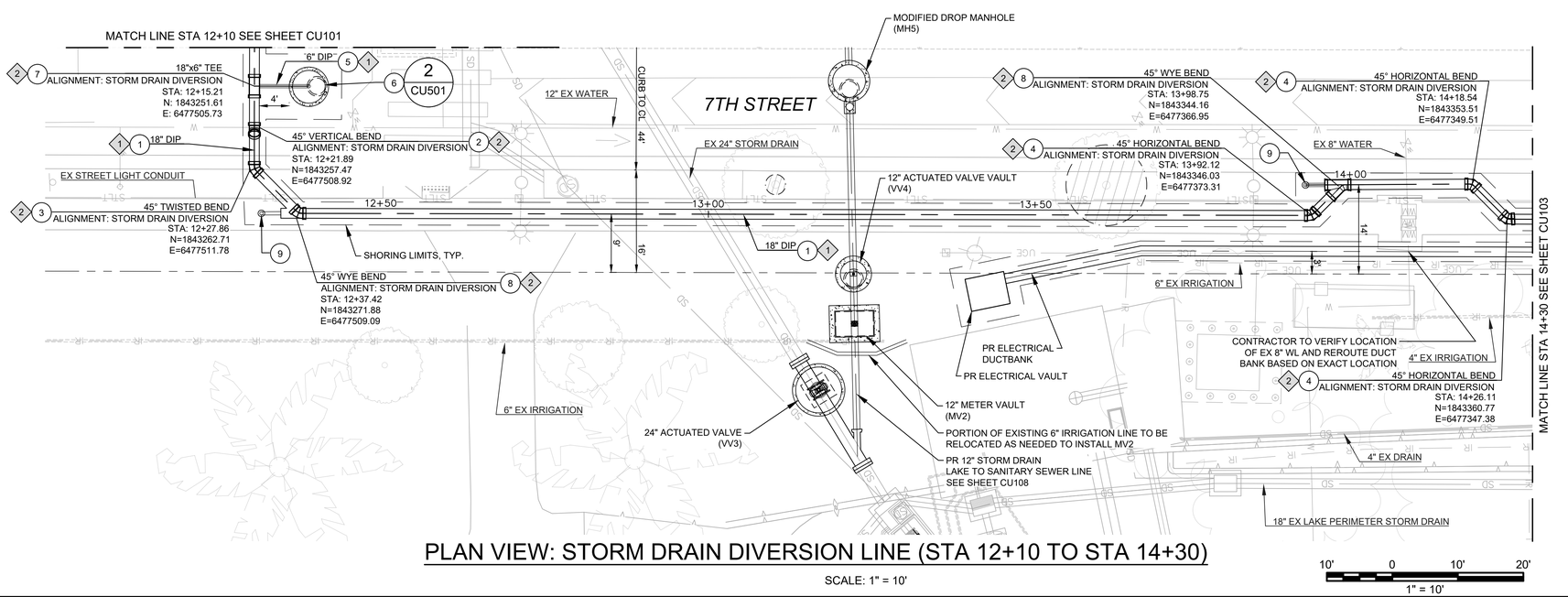

PLAN VIEW: STORM DRAIN DIVERSION LINE (STA 12+10 TO STA 14+30)

SCALE: 1" = 10'

10' 0 10' 20'
1" = 10'

LEGEND

- (1) CONSTRUCTION NOTE
- ◇1 KEY NOTE
- TREE PROTECTION ZONE, SEE SHEET LS100

CONSTRUCTION NOTES

1. NEW 18" DIP STORM DRAIN. SEE KEY NOTE 1.
2. 45 DEGREE VERTICAL DI BEND. SEE KEY NOTE 2.
3. 45 DEGREE TWISTED DI BEND. SEE KEY NOTE 2.
4. 45 DEGREE HORIZONTAL DI BEND. SEE KEY NOTE 2.
5. NEW 6" DIP STORM DRAIN. SEE KEY NOTE 1.
6. CONSTRUCT BLOW OFF VALVE ASSEMBLY (BV1). SEE DETAIL 2 ON SHEET CU501. 6" BOV INV = 251.54.
7. 18"x6" DI TANGENTIAL TEE. SEE KEY NOTE 2.
8. 45 DEGREE WYE DI BEND. SEE KEY NOTE 2.
9. CONSTRUCT CLEANOUT TO GRADE ASSEMBLY. SEE DETAIL 5 ON SHEET CU501.

KEY NOTES

1. REFER TO CITY OF LOS ANGELES STANDARD PLANS S-251 (CASE II) FOR TRENCHING DETAIL AND S-253 FOR PIPE CROSSING SUPPORT DETAIL WHEN APPLICABLE. SEE SPECIFICATION SECTION 02310 FOR BEDDING MATERIALS.
2. FITTINGS SHALL CONFORM TO ANSI/ AWWA C110/A21.10.
3. ALL EXISTING UTILITIES TO BE PROTECTED IN PLACE UNLESS OTHERWISE NOTED.
4. LOCATIONS AND INVERTS OF EX UTILITIES SHOWN IN PROFILE ARE APPROXIMATE BASED ON STANDARD BURIAL DEPTHS AND AS-BUILT DRAWINGS AND SHOULD BE VERIFIED IN THE FIELD.
5. TREE PROTECTION ZONE, TYP. ALL EXCAVATION WITHIN TREE PROTECTION ZONES ARE SUBJECT TO SPECIAL REQUIREMENTS AND RESTRICTIONS. SEE PROTECTION REQUIREMENTS SHEET LS100.

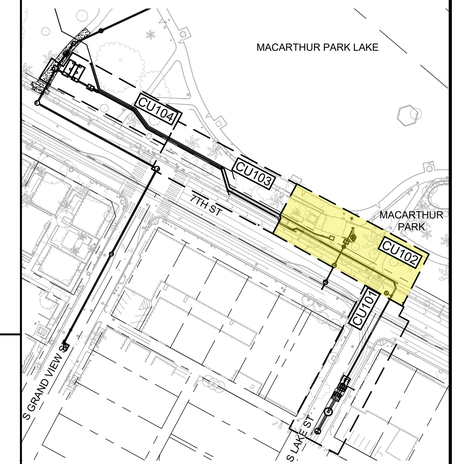

KEY MAP

NO SCALE

craft water engineering, inc.

carollo

ENGINEERING
CITY OF LOS ANGELES
Environmental Engineering Division

COLORADO PROFESSIONAL ENGINEER 94417 REGISTERED CIVIL ENGINEER STATE OF CALIFORNIA

• THIS PLAN WAS ELECTRONICALLY SIGNED AND STAMPED

BUREAU OF ENGINEERING

VERTICAL CONTROL:
HORIZONTAL CONTROL:
SHEET TITLE: PLAN & PROFILE - STORM DRAIN DIVERSION LINE STA 12+15 TO STA 14+30
PROJECT: MACARTHUR LAKE STORMWATER CAPTURE PROJECT
ADDRESS: MACARTHUR PARK 2230 6TH ST LOS ANGELES CA 90057

DEPARTMENT OF PUBLIC WORKS

NO	REVISIONS	DATE	BY

CIP NO. 1920R004

INDEX NO. D-XXXXX

CITY OF LOS ANGELES

DESIGN GROUP
ENGINEER: CS
ARCHITECT:
DESIGNED BY: SS
DRAWN BY: HK
CHECKED BY: RBJ/JG
APPROVED BY:
DATE

WORK ORDER
S33WMLRP, S043MSWC, S343MSWC

SHEET NAME
CU102
SHEET 16 OF 108 SHEETS

REVISION DATES (DESIGN STAGE ONLY)

THE CITY OF LOS ANGELES OR ITS OFFICERS OR AGENTS SHALL NOT BE RESPONSIBLE FOR THE ACCURACY OR COMPLETENESS OF ELECTRONIC COPIES OF THIS PLAN SHEET.

FINAL DESIGN SUBMITTAL

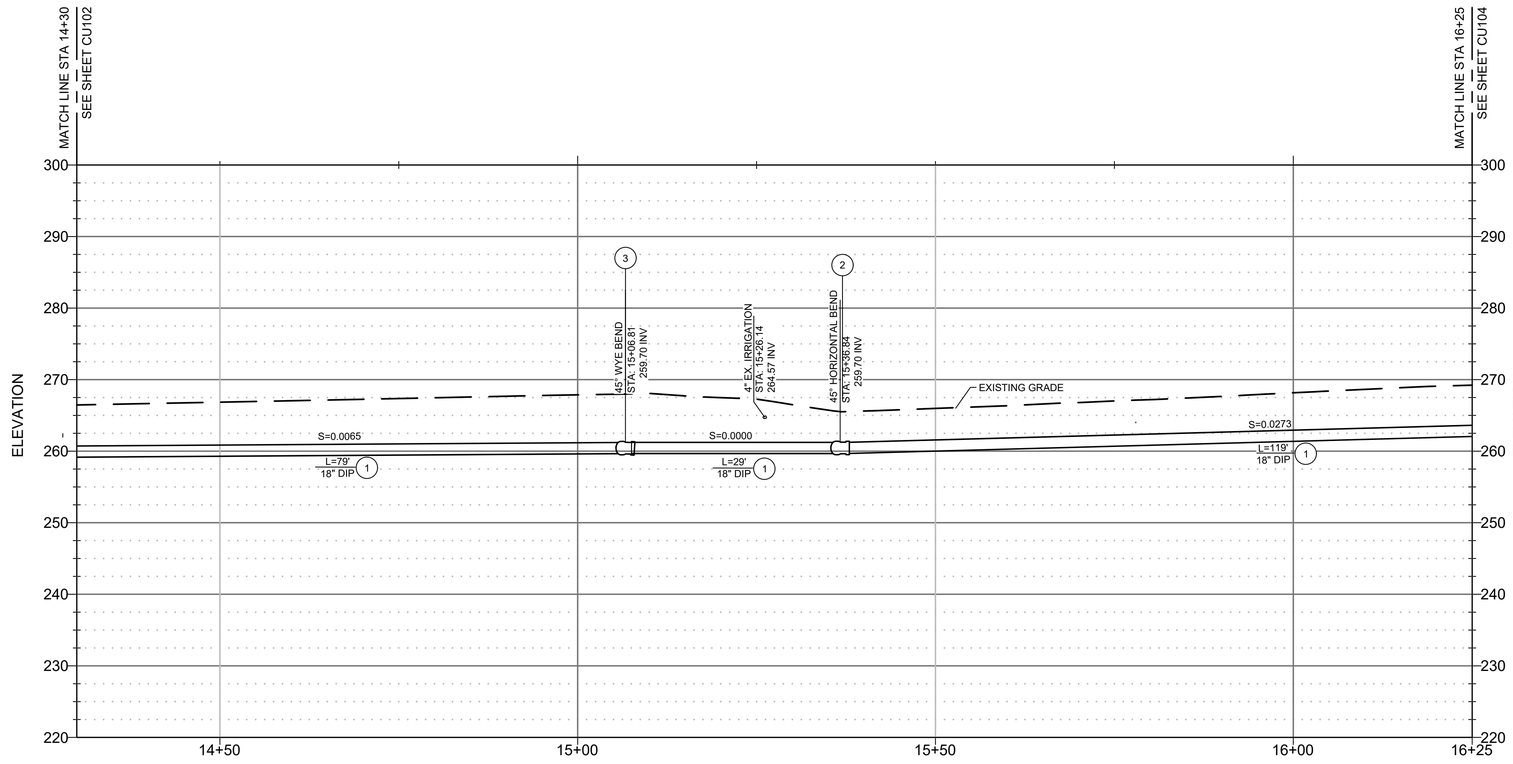

PROFILE VIEW: STORM DRAIN DIVERSION LINE (STA 14+30 TO STA 16+25)

HORIZONTAL SCALE: 1" = 10'
VERTICAL SCALE 1" = 10'

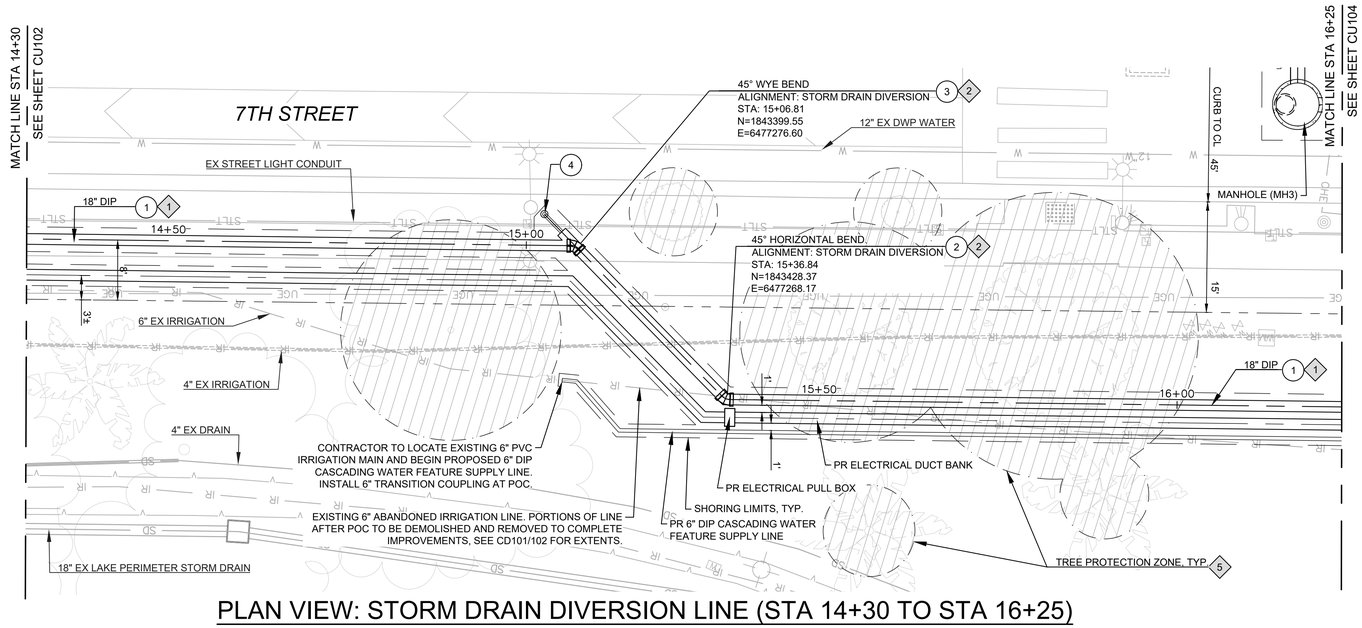

PLAN VIEW: STORM DRAIN DIVERSION LINE (STA 14+30 TO STA 16+25)

SCALE: 1" = 10'

LEGEND

- (1) CONSTRUCTION NOTE
- ◇1 KEY NOTE
- TREE PROTECTION ZONE, SEE SHEET LS100

CONSTRUCTION NOTES

1. NEW 18" DIP STORM DRAIN. SEE KEY NOTE 1.
2. 45 DEGREE HORIZONTAL DI BEND. SEE KEY NOTE 2.
3. 45 DEGREE WYE DI BEND. SEE KEY NOTE 2.
4. CONSTRUCT CLEANOUT TO GRADE ASSEMBLY. SEE DETAIL 5 ON SHEET CU501.

KEY NOTES

1. REFER TO CITY OF LOS ANGELES STANDARD PLANS S-251 (CASE II) FOR TRENCHING DETAIL AND S-253 FOR PIPE CROSSING SUPPORT DETAIL WHEN APPLICABLE. SEE SPECIFICATION SECTION 02310 FOR BEDDING MATERIALS.
2. FITTINGS SHALL CONFORM TO ANSI/ AWWA C110/A21.10.
3. ALL EXISTING UTILITIES TO BE PROTECTED IN PLACE UNLESS OTHERWISE NOTED.
4. LOCATIONS AND INVERTS OF EX UTILITIES SHOWN IN PROFILE ARE APPROXIMATE BASED ON STANDARD BURIAL DEPTHS AND AS-BUILT DRAWINGS AND SHOULD BE VERIFIED IN THE FIELD.
5. TREE PROTECTION ZONE, TYP. ALL EXCAVATION WITHIN TREE PROTECTION ZONES ARE SUBJECT TO SPECIAL REQUIREMENTS AND RESTRICTIONS. SEE PROTECTION REQUIREMENTS SHEET LS100.

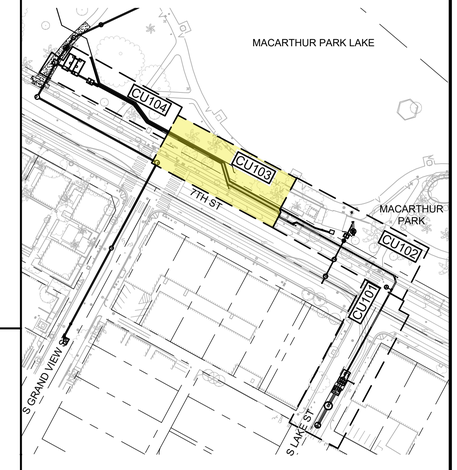

KEY MAP

NO SCALE

ENGINEERING
CITY OF LOS ANGELES
Environmental Engineering Design

THIS PLAN WAS ELECTRONICALLY SIGNED AND STAMPED

REGISTERED PROFESSIONAL ENGINEER CHRISTOPHER NET SEMLOW 94417 CIVIL STATE OF CALIFORNIA

BUREAU OF ENGINEERING

VERTICAL CONTROL:
HORIZONTAL CONTROL:
SHEET TITLE: PLAN & PROFILE - STORM DRAIN DIVERSION LINE STA 14+30 TO STA 16+25
PROJECT: MACARTHUR LAKE STORMWATER CAPTURE PROJECT
ADDRESS: MACARTHUR PARK 2230 6TH ST LOS ANGELES CA 90057

DEPARTMENT OF PUBLIC WORKS

NO	REVISIONS	DATE	BY

CIP NO. 1920R004
INDEX NO. D-XXXXX

CITY OF LOS ANGELES

DESIGN GROUP
ENGINEER: CS
ARCHITECT:
DESIGNED BY: SS
DRAWN BY: HK
CHECKED BY: RBJ/JG
APPROVED BY:
DATE

craftwater engineering, inc.
carollo

WORK ORDER
S33WMLRP, S043MSWC, S343MSWC

SHEET NAME
CU103
SHEET 17 OF 108 SHEETS

THE CITY OF LOS ANGELES OR ITS OFFICERS OR AGENTS SHALL NOT BE RESPONSIBLE FOR THE ACCURACY OR COMPLETENESS OF ELECTRONIC COPIES OF THIS PLAN SHEET.

REVISION DATES (DESIGN STAGE ONLY)

SHEET VERSION 4.0.1 FILE PATH: C:\PW_WORKING\CAROLLO_200000\D0225890\20213700CU103.DWG PLOT DATE: 1/20/2026 7:32 AM SAVED: 1/19/2026 9:53 PM SAVED BY:SHANESASAKI

FINAL DESIGN SUBMITTAL

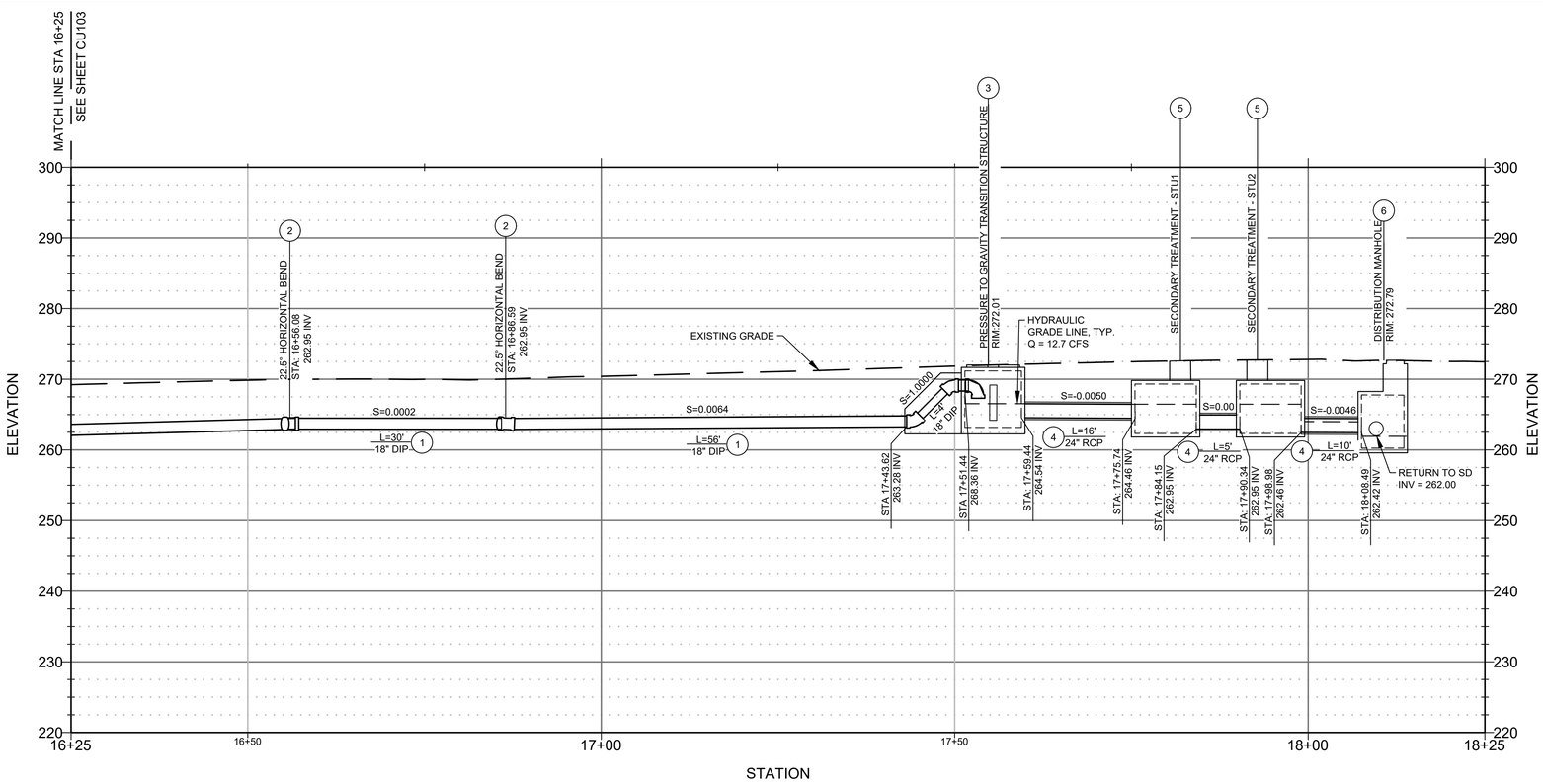

PROFILE VIEW: STORM DRAIN DIVERSION LINE (STA 16+25 TO END)

HORIZONTAL SCALE: 1" = 10'
VERTICAL SCALE 1" = 10'

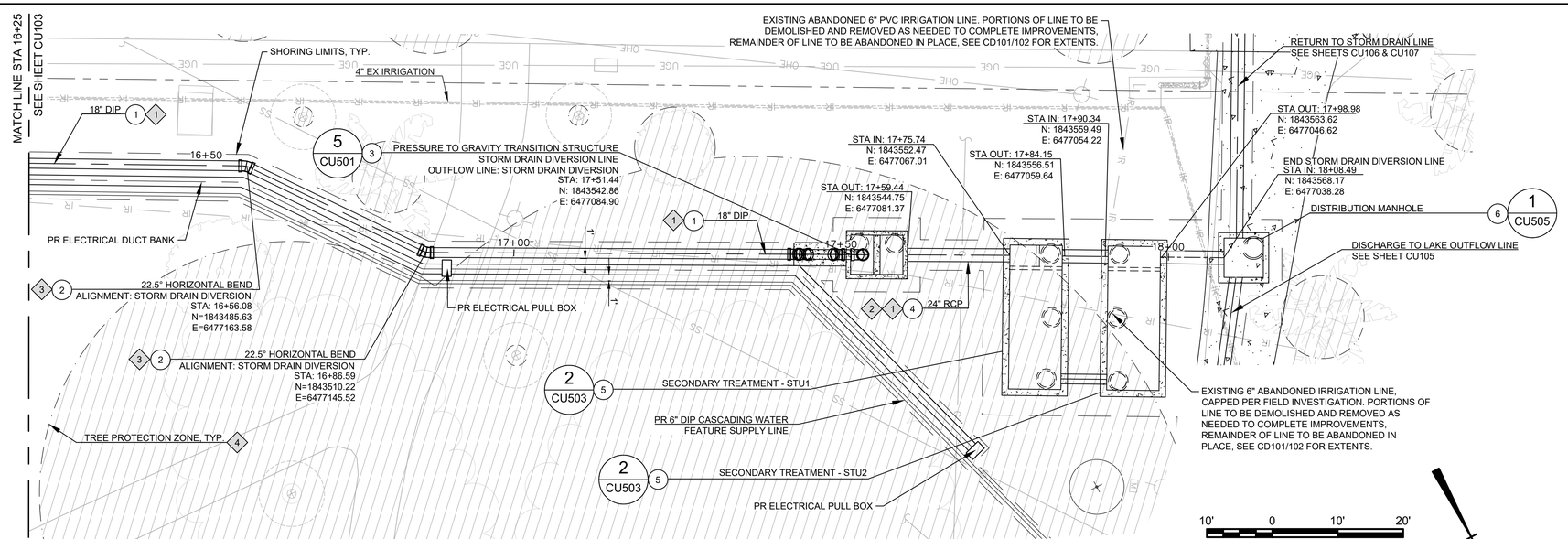

PLAN VIEW: STORM DRAIN DIVERSION LINE (STA 16+25 TO END)

SCALE: 1" = 10'

LEGEND

- (1) CONSTRUCTION NOTE
- ◇1 KEY NOTE
- TREE PROTECTION ZONE, SEE SHEET LS100

CONSTRUCTION NOTES

1. NEW 18" DIP STORM DRAIN. SEE KEY NOTE 1.
2. 22.5 DEGREE HORIZONTAL DI BEND. SEE KEY NOTE 3.
3. CONSTRUCT PRESSURE TO GRAVITY TRANSITION MANHOLE (TS1) PER DETAIL 5, SHEET CU501.
4. NEW 24" CLASS IV RCP STORM DRAIN (D-LOAD=1600). SEE KEY NOTES 1 AND 2.
5. CONSTRUCT SECONDARY TREATMENT UNITS (STU1 & STU2) IN PARALLEL VAULT CONFIGURATION. SEE DETAIL 2, SHEET CU503.
6. CONSTRUCT PRECAST CONCRETE DISTRIBUTION MANHOLE PER DETAIL 1, SHEET CU505.

KEY NOTES

1. REFER TO CITY OF LOS ANGELES STANDARD PLANS S-251 (CASE II) FOR TRENCHING DETAIL AND S-253 FOR PIPE CROSSING SUPPORT DETAIL WHEN APPLICABLE. SEE SPECIFICATION SECTION 02310 FOR BEDDING MATERIALS.
2. REFER TO CITY OF LOS ANGELES STANDARD PLAN S-241-0 FOR REINFORCED CONCRETE PIPE DETAIL.
3. FITTINGS SHALL CONFORM TO ANSI/ AWWA C110/A21.10.
4. TREE PROTECTION ZONE, TYP. ALL EXCAVATION WITHIN TREE PROTECTION ZONES ARE SUBJECT TO SPECIAL REQUIREMENTS AND RESTRICTIONS. SEE PROTECTION REQUIREMENTS SHEET LS100.

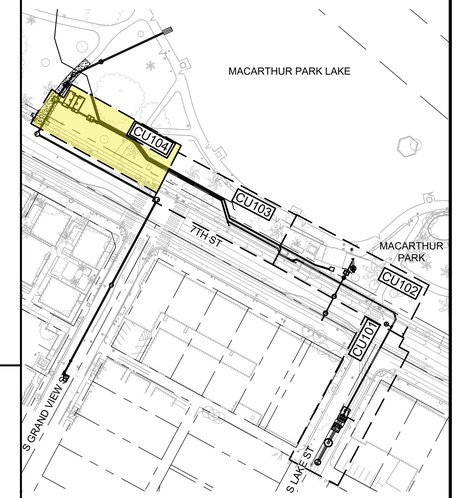

KEY MAP

NO SCALE

ENGINEERING
CITY OF LOS ANGELES
Environmental Engineering Design

THIS PLAN WAS ELECTRONICALLY SIGNED AND STAMPED

REGISTERED PROFESSIONAL ENGINEER C 94417 CIVIL STATE OF CALIFORNIA

BUREAU OF ENGINEERING

VERTICAL CONTROL:
HORIZONTAL CONTROL:

SHEET TITLE: PLAN & PROFILE - STORM DRAIN DIVERSION LINE STA 16+25 TO END
PROJECT: MACARTHUR LAKE STORMWATER CAPTURE PROJECT
ADDRESS: MACARTHUR PARK 2230 6TH ST LOS ANGELES CA 90057

DEPARTMENT OF PUBLIC WORKS

NO.	REVISIONS	DATE	BY

CIP NO. 1920R004

INDEX NO. D-XXXXX

CITY OF LOS ANGELES

DESIGN GROUP
DATE
ENGINEER: CS
ARCHITECT:
DESIGNED BY: SS
DRAWN BY: HK
CHECKED BY: RB/JG
APPROVED BY:

craftwater engineering, inc.

carollo

WORK ORDER
S33WMLRP, S043MSWC, S343MSWC

SHEET NAME
CU104
SHEET 18 OF 108 SHEETS

THE CITY OF LOS ANGELES OR ITS OFFICERS OR AGENTS SHALL NOT BE RESPONSIBLE FOR THE ACCURACY OR COMPLETENESS OF ELECTRONIC COPIES OF THIS PLAN SHEET.

REVISION DATES (DESIGN STAGE ONLY)

SHEET VERSION 4.0.1 FILE PATH: C:\PW_WORKING\CAROLLO_200000\D0225890\20213700CU104.DWG PLOT DATE: 1/20/2026 7:33 AM SAVED: 1/20/2026 3:22 AM SAVED BY:SHANESASAKI

FINAL DESIGN SUBMITTAL

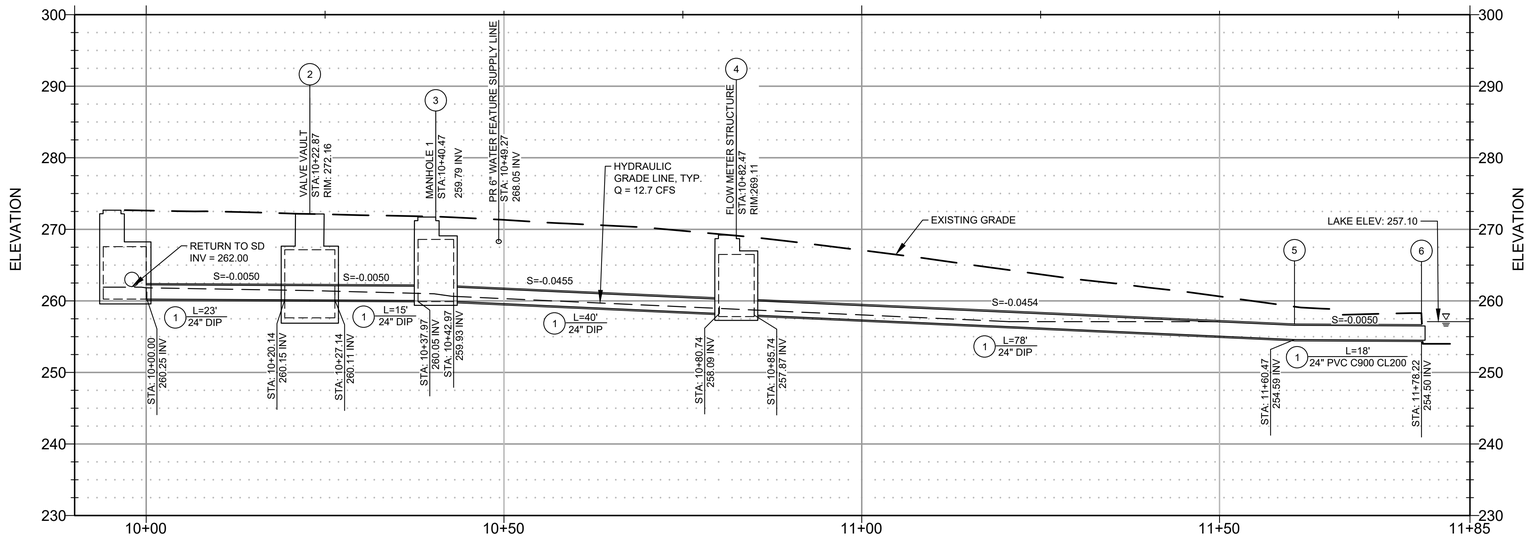

PROFILE VIEW: DISCHARGE TO LAKE OUTFLOW LINE (STA 10+00 TO END)

HORIZONTAL SCALE: 1" = 10'
VERTICAL SCALE 1" = 10'

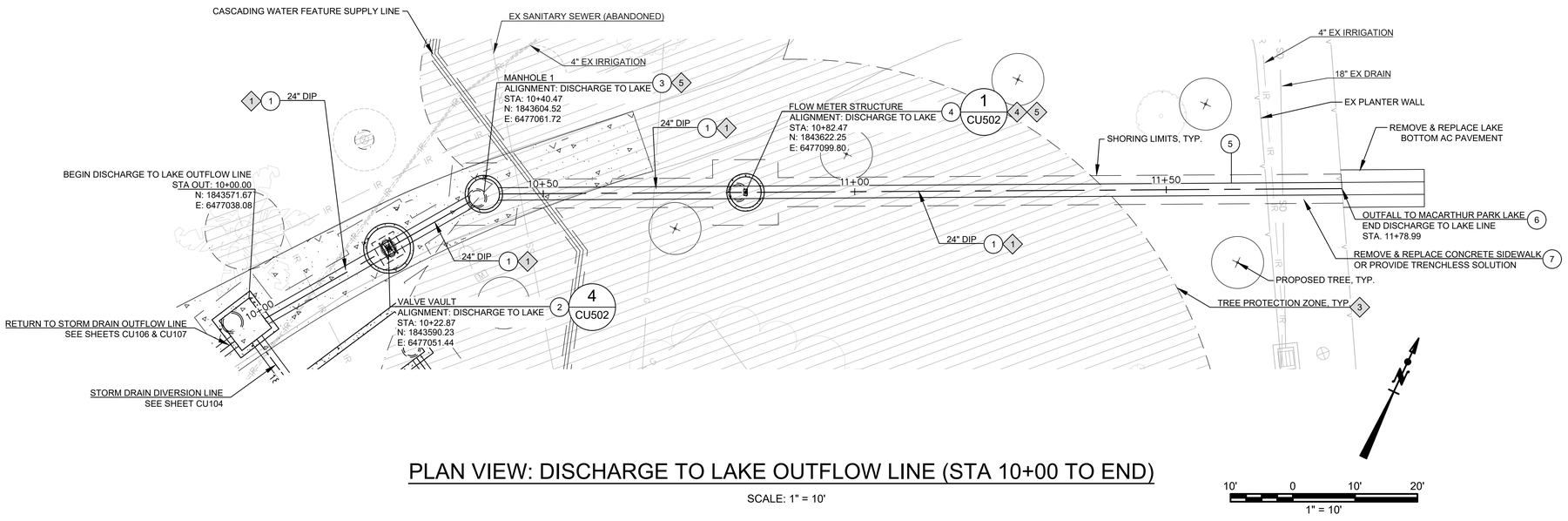

PLAN VIEW: DISCHARGE TO LAKE OUTFLOW LINE (STA 10+00 TO END)

SCALE: 1" = 10'

LEGEND

- (1) CONSTRUCTION NOTE
- ◇1 KEY NOTE
- TREE PROTECTION ZONE, SEE SHEET LS100

CONSTRUCTION NOTES

1. NEW 24" DIP STORM DRAIN. SEE KEY NOTE 1.
2. CONSTRUCT VALVE VAULT (VV1). SEE DETAIL 4 ON SHEET CU502.
3. CONSTRUCT MODIFIED CASE II 60" PRECAST CONCRETE MANHOLE (MH1) PER LA BOE STANDARD PLAN S-150-0. SEE KEY NOTE 5.
4. CONSTRUCT FLOW METER AND VAULT (MV1). SEE DETAIL 1 ON SHEET CU502 AND KEY NOTE 4 AND 5.
5. POINT OF PIPE DEFLECTION. INSTALL TRANSITION COUPLING.
6. LAKE WALL PENETRATION TO DISCHARGE TO LAKE. CONTRACTOR TO INSTALL PENETRATION PERPENDICULAR TO EXISTING WALL. SEE DETAIL 4 ON SHEET CU501.
7. CAREFULLY REMOVE AND REPLACE EXISTING WALKWAY AND PLANTER WALL TO MATCH EXISTING PER SB/502, OR PROVIDE TRENCHLESS SOLUTION. TIE (WELD OR OVERLAP) EXISTING STEEL REINFORCING TO NEW CONCRETE.

KEY NOTES

1. REFER TO CITY OF LOS ANGELES BOE STANDARD PLANS S-251 (CASE II) FOR TRENCHING DETAIL AND S-253 FOR PIPE CROSSING SUPPORT DETAIL WHEN APPLICABLE. SEE SPECIFICATION SECTION 02310 FOR BEDDING MATERIALS.
2. FITTINGS SHALL CONFORM TO ANSI/ AWWA C110/A21.10.
3. TREE PROTECTION ZONE, TYP. ALL EXCAVATION WITHIN TREE PROTECTION ZONES ARE SUBJECT TO SPECIAL REQUIREMENTS AND RESTRICTIONS. SEE TREE PROTECTION REQUIREMENTS SHEET LS100.
4. FOR FLOW METER STRUCTURE MV1, USE 60" PRECAST CONCRETE MANHOLE PER LA BOE STANDARD PLAN S-150-0.
5. 30" MANHOLE FRAME AND LID PER LA BOE STANDARD PLAN S-283-3. TYPE I PROTECTIVE LINER SHALL NOT BE REQUIRED AT THIS INSTALLATION.

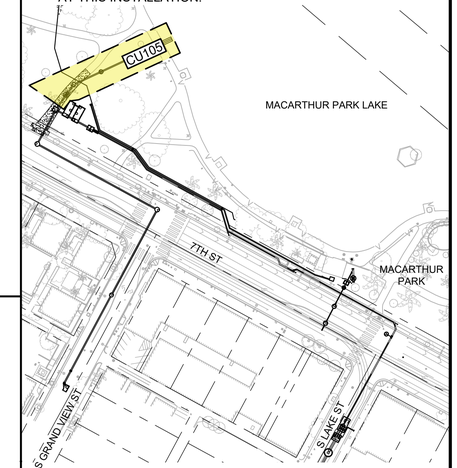

KEY MAP
NO SCALE

ENGINEERING
CITY OF LOS ANGELES
Environmental Engineering Division

THIS PLAN WAS ELECTRONICALLY SIGNED AND STAMPED

BUREAU OF ENGINEERING
DEPARTMENT OF PUBLIC WORKS
CITY OF LOS ANGELES

VERTICAL CONTROL:
HORIZONTAL CONTROL:
SHEET TITLE: PLAN & PROFILE - DISCHARGE TO LAKE LINE STA 10+00 TO END
PROJECT: MACARTHUR LAKE STORMWATER CAPTURE PROJECT
ADDRESS: MACARTHUR PARK 2230 6TH ST LOS ANGELES CA 90057

NO.	REVISIONS	DATE	BY

CIP NO. 1920R004
INDEX NO. D-XXXXX

craftwater engineering, inc.
carollo

DESIGN GROUP
ENGINEER:CS
ARCHITECT:
DESIGNED BY:SS
DRAWN BY:HK
CHECKED BY:RBJ/JG
APPROVED BY:

WORK ORDER
S33WMLRP, S043MSWC, S343MSWC

SHEET NAME
CU105
SHEET 19 OF 108 SHEETS

REVISION DATES (DESIGN STAGE ONLY)

THE CITY OF LOS ANGELES OR ITS OFFICERS OR AGENTS SHALL NOT BE RESPONSIBLE FOR THE ACCURACY OR COMPLETENESS OF ELECTRONIC COPIES OF THIS PLAN SHEET.

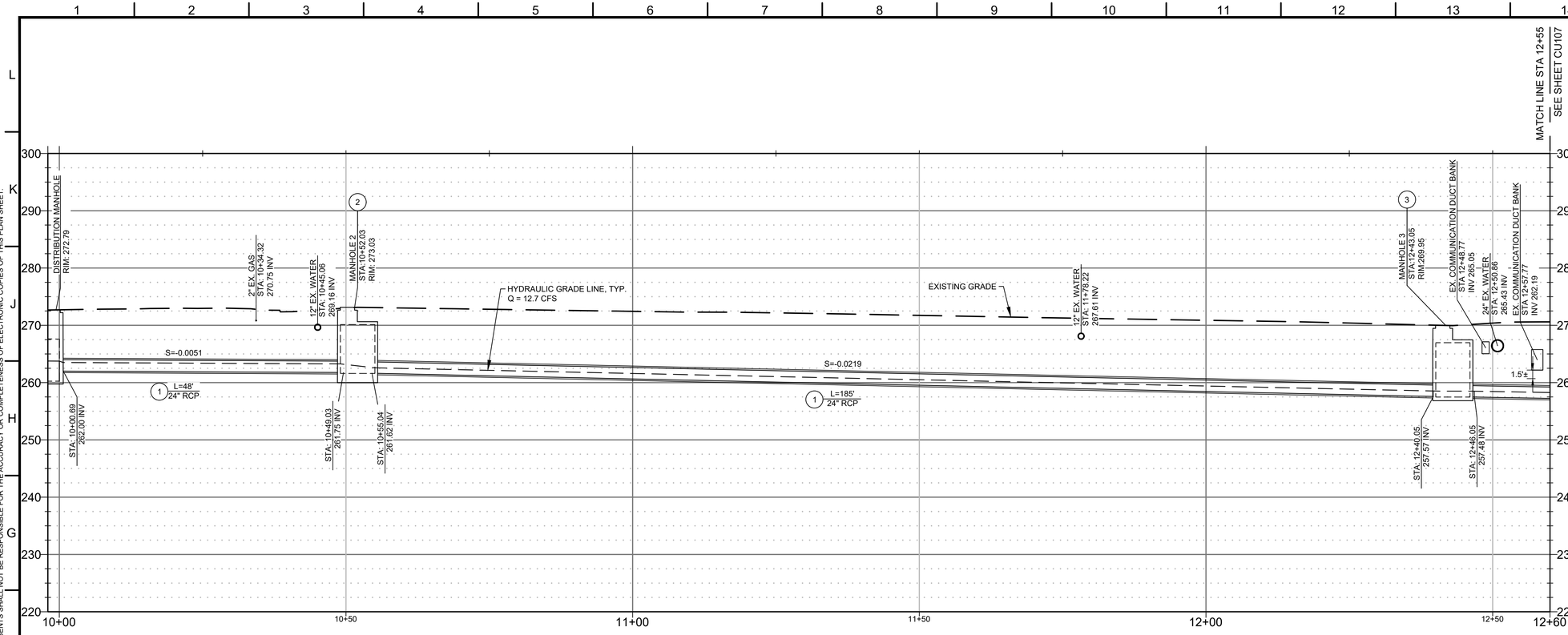

PROFILE VIEW: RETURN TO STORM DRAIN LINE (STA 10+00 TO STA 12+60)

HORIZONTAL SCALE: 1" = 10'
VERTICAL SCALE 1" = 10'

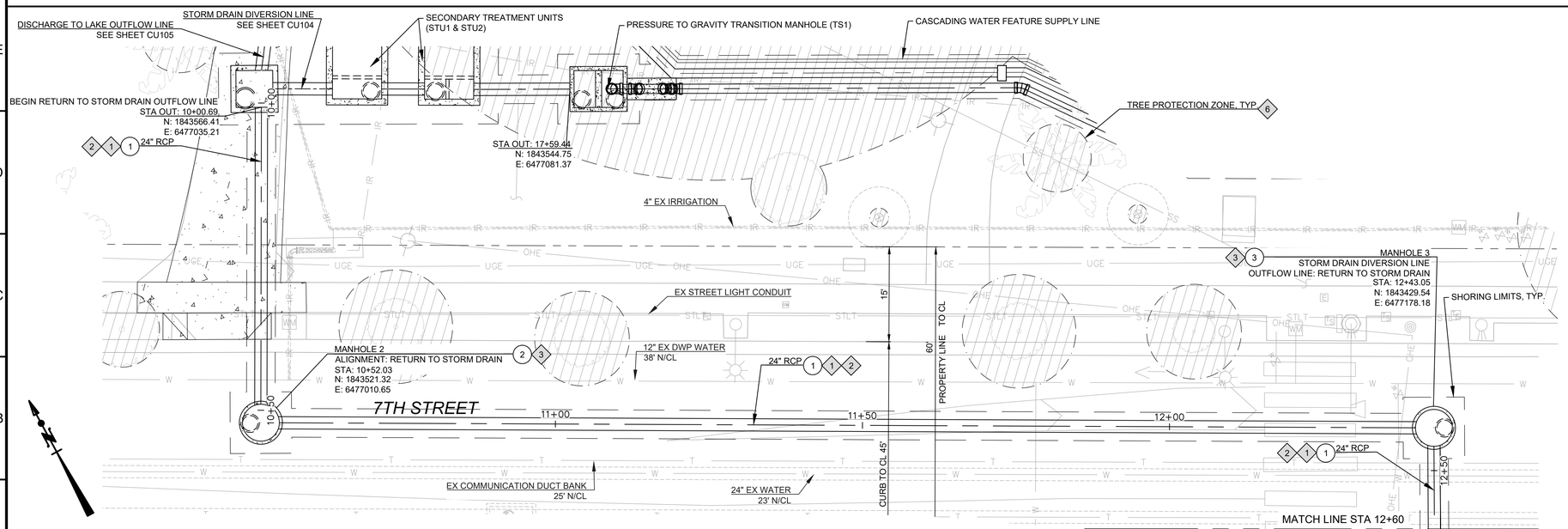

PLAN VIEW: RETURN TO STORM DRAIN LINE (STA 10+00 TO STA 12+60)

SCALE: 1" = 10'

10' 0 10' 20'
1" = 10'

LEGEND

1 — CONSTRUCTION NOTE
1 — KEY NOTE
TREE PROTECTION ZONE, SEE SHEET LS100

CONSTRUCTION NOTES

1. NEW 24" CLASS IV RCP STORM DRAIN (D-LOAD=1800). SEE KEY NOTES 1 AND 2.
2. CONSTRUCT MODIFIED CASE II 72" PRECAST CONCRETE MANHOLE (MH1) PER LA BOE STANDARD PLAN S-150-0. SEE KEY NOTE 3.
3. CONSTRUCT MODIFIED CASE II 72" PRECAST CONCRETE MANHOLE (MH2) PER LA BOE STANDARD PLAN S-150-0. SEE KEY NOTE 3.

KEY NOTES

1. REFER TO LA BOE STANDARD PLANS S-251 (CASE II) FOR TRENCHING DETAIL AND S-253 FOR PIPE CROSSING SUPPORT DETAIL WHEN APPLICABLE. SEE SPECIFICATION SECTION 02310 FOR BEDDING MATERIALS.
2. REFER TO LA BOE STANDARD PLAN S-241-0 FOR REINFORCED CONCRETE PIPE DETAIL.
3. 30" MANHOLE FRAME AND LID PER LA BOE STANDARD PLAN S-283-3. TYPE I PROTECTIVE LINER SHALL NOT BE REQUIRED AT THIS INSTALLATION.
4. ALL EXISTING UTILITIES TO BE PROTECTED IN PLACE UNLESS OTHERWISE NOTED.
5. LOCATIONS AND INVERTS OF EX UTILITIES SHOWN IN PROFILE ARE APPROXIMATE BASED ON STANDARD BURIAL DEPTHS AND AS-BUILT DRAWINGS AND SHOULD BE VERIFIED IN THE FIELD.
6. TREE PROTECTION ZONE, TYP. ALL EXCAVATION WITHIN TREE PROTECTION ZONES ARE SUBJECT TO SPECIAL REQUIREMENTS AND RESTRICTIONS. SEE TREE PROTECTION REQUIREMENTS SHEET LS100.

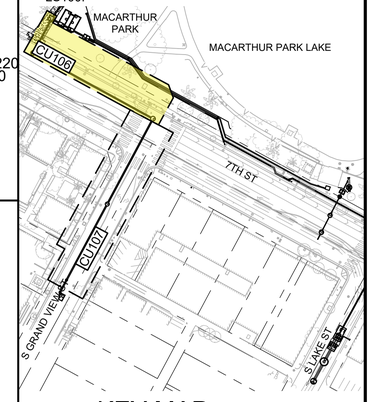

KEY MAP

NO SCALE

ENGINEERING
CITY OF LOS ANGELES
Environmental Engineering Design

THIS PLAN WAS ELECTRONICALLY SIGNED AND STAMPED

CHRISTOPHER KENT SEMLOW — REGISTERED PROFESSIONAL ENGINEER — 94417 — CIVIL — STATE OF CALIFORNIA

BUREAU OF ENGINEERING

VERTICAL CONTROL:
HORIZONTAL CONTROL:
SHEET TITLE: PLAN & PROFILE - RETURN TO STORM DRAIN LINE STA 10+00 TO STA 12+60
PROJECT: MACARTHUR LAKE STORMWATER CAPTURE PROJECT
ADDRESS: MACARTHUR PARK 2230 6TH ST LOS ANGELES CA 90057

DEPARTMENT OF PUBLIC WORKS

NO	REVISIONS	DATE	BY

CIP NO. 1920R004

INDEX NO. D-XXXXX

CITY OF LOS ANGELES

DESIGN GROUP | DATE
ENGINEER: CS
ARCHITECT:
DESIGNED BY: SS
DRAWN BY: HK
CHECKED BY: RB/JG
APPROVED BY:

craft water engineering, inc.

carollo

WORK ORDER
S33WMLRP, S043MSWC, S343MSWC

SHEET NAME
CU106
SHEET 20 OF 108 SHEETS

REVISION DATES (DESIGN STAGE ONLY)

THE CITY OF LOS ANGELES OR ITS OFFICERS OR AGENTS SHALL NOT BE RESPONSIBLE FOR THE ACCURACY OR COMPLETENESS OF ELECTRONIC COPIES OF THIS PLAN SHEET.

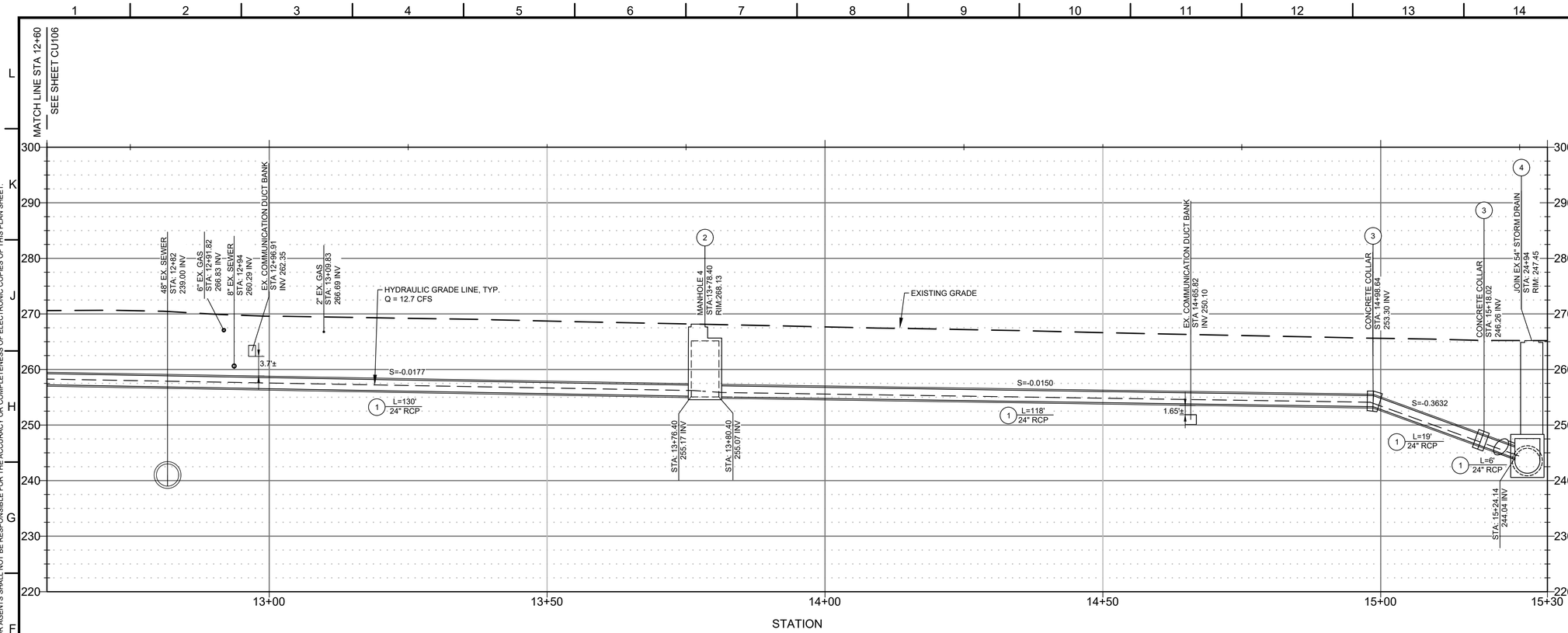

PROFILE VIEW: RETURN TO STORM DRAIN LINE (STA 12+60 TO END)

HORIZONTAL SCALE: 1" = 10'
VERTICAL SCALE 1" = 10'

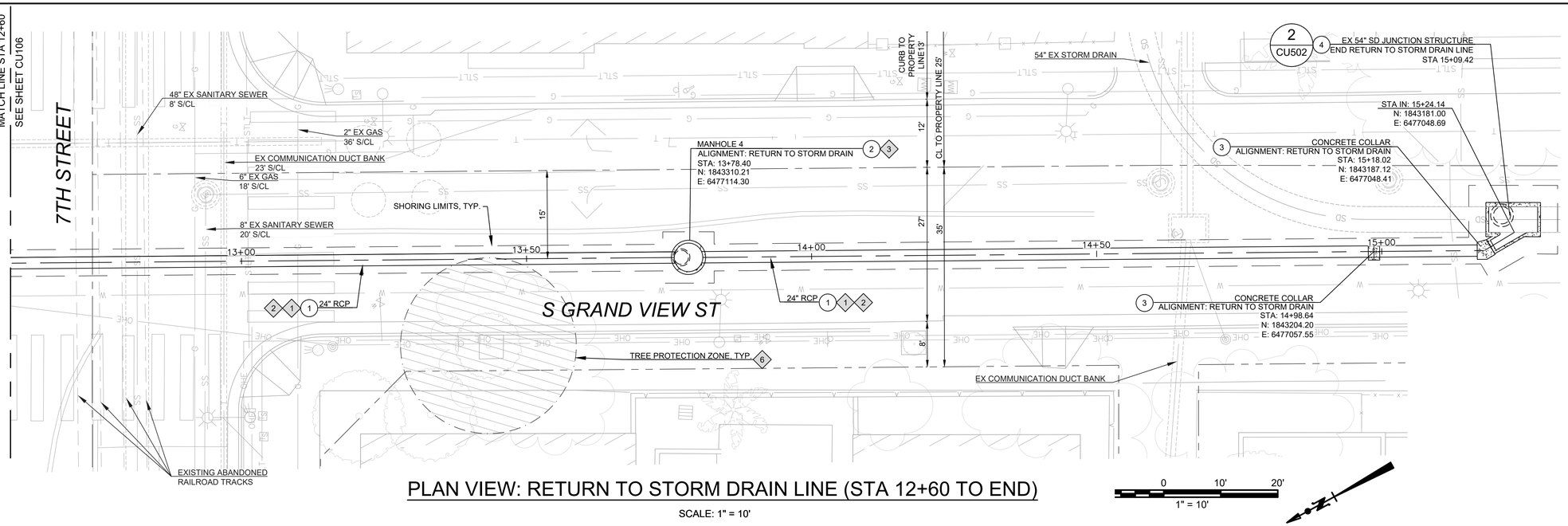

PLAN VIEW: RETURN TO STORM DRAIN LINE (STA 12+60 TO END)

SCALE: 1" = 10'

0 10' 20'
1" = 10'

LEGEND

(1) CONSTRUCTION NOTE ◇1◇ KEY NOTE

TREE PROTECTION ZONE, SEE SHEET LS100

CONSTRUCTION NOTES

1. NEW 24" RCP STORM DRAIN (CLASS IV D-LOAD=1700 UNLESS OTHERWISE NOTED ON PROFILE). SEE KEY NOTES 1 AND 2.
2. CONSTRUCT CASE II 60" PRECAST CONCRETE MANHOLE (MH4) PER LA BOE STANDARD PLAN S-150-0. SEE KEY NOTE 3.
3. CONSTRUCT CONCRETE COLLAR PER LA BOE STANDARD PLAN S-333-0. VERTICAL COLLAR: A = 35°. HORIZONTAL COLLAR: A = 30°.
4. CONSTRUCT EX 54" RCP STORM DRAIN JUNCTION STRUCTURE. SEE DETAIL 2 ON SHEET CU502.

KEY NOTES

1. REFER TO LA BOE STANDARD PLANS S-251 (CASE II) FOR TRENCHING DETAIL, S-111-0 FOR SEWER HOUSE CONNECTION REMODELING DETAIL, AND S-253 FOR PIPE CROSSING SUPPORT DETAIL WHEN APPLICABLE. SEE SPECIFICATION SECTION 02310 FOR BEDDING MATERIALS.
2. REFER TO LA BOE STANDARD PLAN S-241-0 FOR REINFORCED CONCRETE PIPE DETAIL.
3. 30" MANHOLE FRAME AND LID PER LA BOE STANDARD PLAN S-283-3. TYPE I PROTECTIVE LINER SHALL NOT BE REQUIRED AT THIS INSTALLATION.
4. ALL EXISTING UTILITIES TO BE PROTECTED IN PLACE UNLESS OTHERWISE NOTED.
5. LOCATIONS AND INVERTS OF EX UTILITIES SHOWN IN PROFILE ARE APPROXIMATE BASED ON STANDARD BURIAL DEPTHS AND AS-BUILT DRAWINGS AND SHOULD BE VERIFIED IN THE FIELD.
6. TREE PROTECTION ZONE, TYP. ALL EXCAVATION WITHIN TREE PROTECTION ZONES ARE SUBJECT TO SPECIAL REQUIREMENTS AND RESTRICTIONS. SEE TREE PROTECTION REQUIREMENTS SHEET LS100.

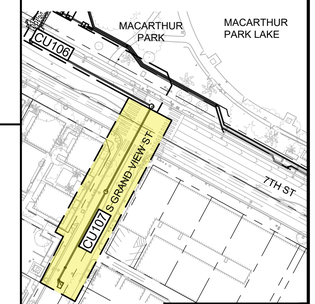

KEY MAP

NO SCALE

craft water engineering, inc.

carollo

ENGINEERING
CITY OF LOS ANGELES
Environmental Engineering Design

THIS PLAN WAS ELECTRONICALLY SIGNED AND STAMPED

BUREAU OF ENGINEERING
DEPARTMENT OF PUBLIC WORKS
CITY OF LOS ANGELES

VERTICAL CONTROL:
HORIZONTAL CONTROL:
SHEET TITLE: PLAN & PROFILE - RETURN TO STORM DRAIN LINE STA 12+60 TO END
PROJECT: MACARTHUR LAKE STORMWATER CAPTURE PROJECT
ADDRESS: MACARTHUR PARK 2230 6TH ST LOS ANGELES CA 90057

NO	REVISIONS	DATE	BY

CIP NO. 1920R004
INDEX NO. D-XXXXX

DESIGN GROUP
ENGINEER: CS
ARCHITECT:
DESIGNED BY: SS
DRAWN BY: HK
CHECKED BY: RBJ/JG
APPROVED BY:
DATE

WORK ORDER
S33WMLRP, S043MSWC, S343MSWC

SHEET NAME
CU107
SHEET 21 OF 108 SHEETS

REVISION DATES (DESIGN STAGE ONLY)

THE CITY OF LOS ANGELES OR ITS OFFICERS OR AGENTS SHALL NOT BE RESPONSIBLE FOR THE ACCURACY OR COMPLETENESS OF ELECTRONIC COPIES OF THIS PLAN SHEET.

FINAL DESIGN SUBMITTAL

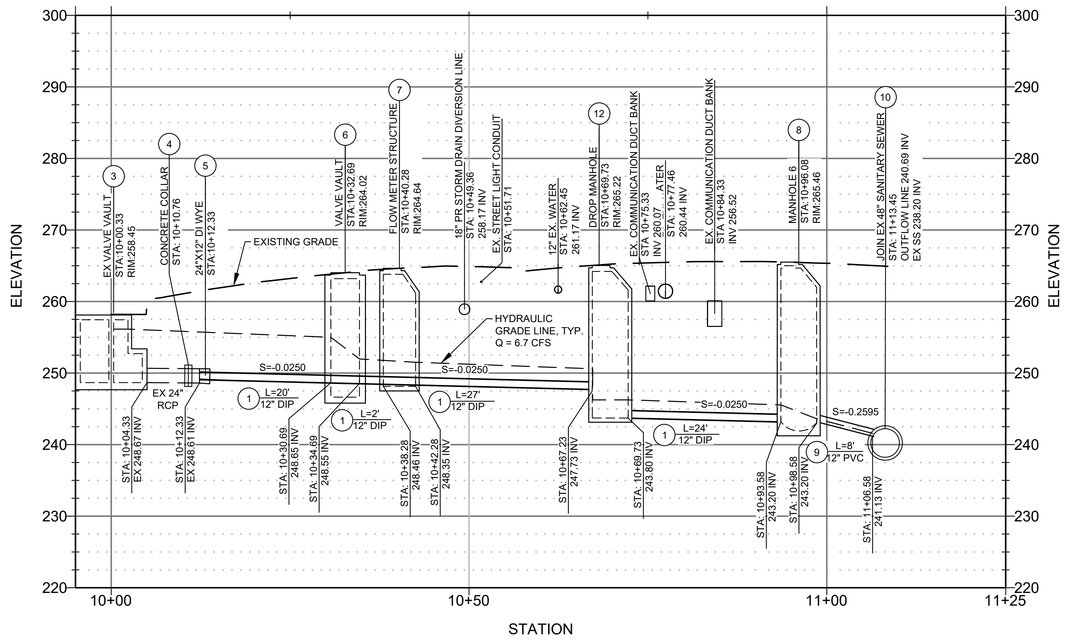

PROFILE VIEW: LAKE TO SANITARY SEWER LINE (STA 10+00 TO END)

HORIZONTAL SCALE: 1" = 10'
VERTICAL SCALE 1" = 10'

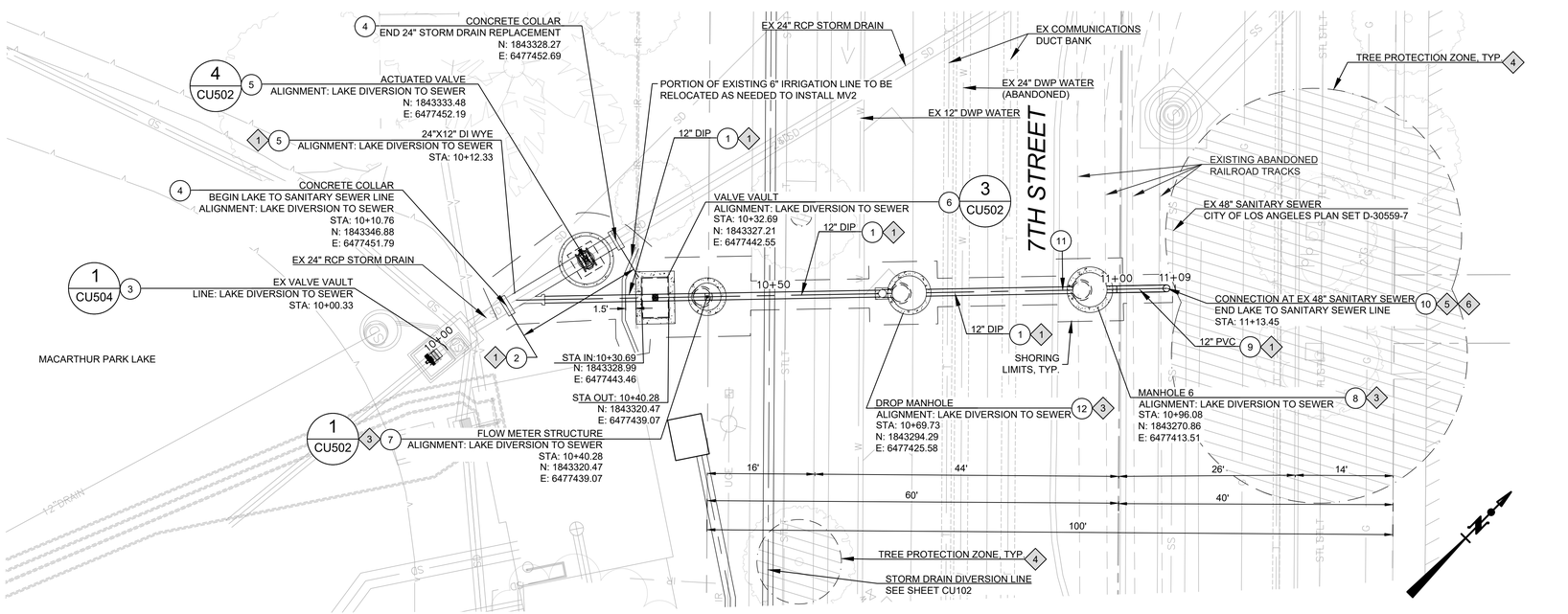

PLAN VIEW: LAKE TO SANITARY SEWER LINE (STA 10+00 TO END)

SCALE: 1" = 10'

LEGEND

1 — CONSTRUCTION NOTE
1 — KEY NOTE
TREE PROTECTION ZONE, SEE SHEET LS100

CONSTRUCTION NOTES

1. NEW 12" DIP STORM DRAIN. SEE KEY NOTE 1.
2. REPLACE APPROX. 19 LF OF 24" RCP STORM DRAIN BETWEEN TRANSITION COUPLINGS WITH 24" DIP STORM DRAIN. SEE KEY NOTE 1.
3. INSTALL ACTUATED VALVE IN EXISTING VALVE VAULT (VV2). SEE DETAIL 1 ON SHEET CU504.
4. CONSTRUCT CONCRETE COLLAR PER LA BOE STANDARD PLAN S-333-0. A = 0°.
5. CONSTRUCT ACTUATED VALVE VAULT (VV3). SEE DETAIL 4 ON SHEET CU502.
6. CONSTRUCT ACTUATED VALVE VAULT (VV4). SEE DETAIL 3, SHEET CU502.
7. CONSTRUCT METER VAULT (MV2). SEE DETAIL 1 ON SHEET CU502.
8. CONSTRUCT MODIFIED GAS TRAP MAINTENANCE HOLE (MH5) PER LA BOE STANDARD PLAN S-139-2. SEE KEY NOTE 3.
9. NEW 12" C900 PVC CL200 STORM DRAIN. SEE KEY NOTE 1.
10. CONNECT TO EXISTING SANITARY SEWER PER DETAIL 3, SHEET CU504. SEE KEY NOTE 5 AND 6.
11. INSTALL 12" TIDE FLEX 37G IN-LINE CHECK VALVE OR APPROVED EQUAL IN THE UPSTREAM PIPE OUTLET INTO MH5.
12. CONSTRUCT MODIFIED DROP SEWER MANHOLE PER LA BOE STANDARD PLAN S-148-1. D_M = 5'-0".

KEY NOTES

1. REFER TO CITY OF LOS ANGELES STANDARD PLANS S-251 (CASE II) FOR TRENCHING DETAIL AND S-253 FOR PIPE CROSSING SUPPORT DETAIL WHEN APPLICABLE. SEE SPECIFICATION SECTION 02310 FOR BEDDING MATERIALS.
2. FITTINGS SHALL CONFORM TO ANSI/ AWWA C110/A21.10.
3. 60" TYPE I PRECAST MANHOLE SHAFT PER LA BOE STANDARD PLAN S-150-0, PROVIDE TYPE I PROTECTIVE LINER. 30" MANHOLE FRAME AND LID MARKED "D" PER LA BOE STANDARD PLAN S-283-3.
4. TREE PROTECTION ZONE, TYP. ALL EXCAVATION WITHIN TREE PROTECTION ZONES ARE SUBJECT TO SPECIAL REQUIREMENTS AND RESTRICTIONS. SEE TREE PROTECTION REQUIREMENTS SHEET LS100.
5. THE CONTRACTOR IS NOTIFIED OF THE CCTV REQUIREMENTS FOR CONNECTIONS TO EXISTING SEWERS. SEE CCTV NOTES SHEET GI04.
6. CONTRACTOR SHALL PROVIDE SEWER BYPASS THROUGHOUT THE DURATION OF THE SEWER CONNECTION WORK IN ACCORDANCE WITH THE SPECIFICATIONS.

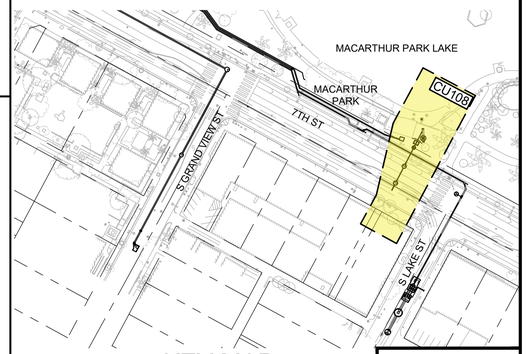

KEY MAP
NO SCALE

ENGINEERING
CITY OF LOS ANGELES
Environmental Engineering Division

THIS PLAN WAS ELECTRONICALLY SIGNED AND STAMPED

BUREAU OF ENGINEERING
VERTICAL CONTROL:
HORIZONTAL CONTROL:
SHEET TITLE: PLAN & PROFILE - LAKE TO SANITARY SEWER LINE STA 10+00 TO END
PROJECT: MACARTHUR LAKE STORMWATER CAPTURE PROJECT
ADDRESS: MACARTHUR PARK 2230 6TH ST LOS ANGELES CA 90057

DEPARTMENT OF PUBLIC WORKS
CITY OF LOS ANGELES
NO. | REVISIONS | DATE | BY
INDEX NO. D-XXXXX
C.I.P. NO. 1920R004

DESIGN GROUP | DATE
ENGINEER: CS
ARCHITECT:
DESIGNED BY: SS
DRAWN BY: HK
CHECKED BY: RBJ/JG
APPROVED BY:

craftwater engineering, inc.
carollo

WORK ORDER
S33WMLRP, S043MSWC, S343MSWC

SHEET NAME
CU108
SHEET 22 OF 108 SHEETS

REVISION DATES (DESIGN STAGE ONLY)

THE CITY OF LOS ANGELES OR ITS OFFICERS OR AGENTS SHALL NOT BE RESPONSIBLE FOR THE ACCURACY OR COMPLETENESS OF ELECTRONIC COPIES OF THIS PLAN SHEET.

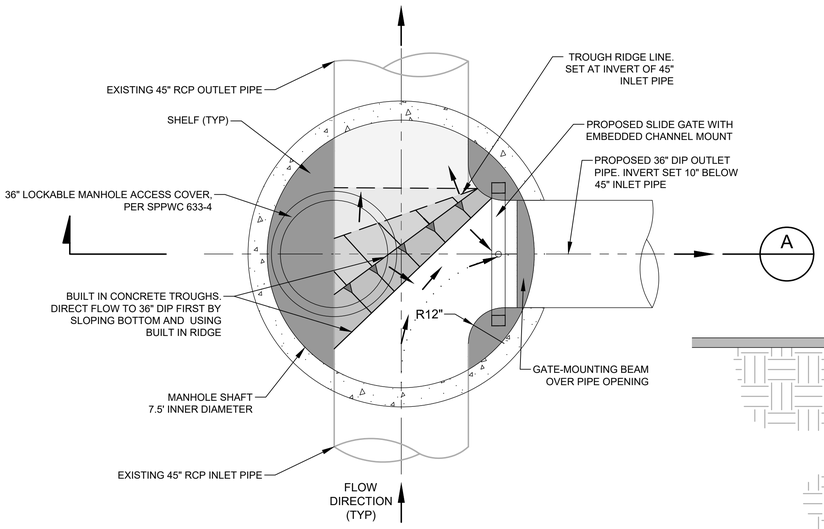

BASE DETAIL

NOTES:

1. PRECAST STRUCTURE DESIGN SHALL ACCOUNT FOR HYDROSTATIC UPLIFT POTENTIAL.
2. CONTRACTOR TO SUBMIT FOR APPROVAL THE FINAL SLIDE GATE INSTALLATION CONFIGURATION AS RECOMMENDED BY SLIDE GATE MANUFACTURER.
3. CONTRACTOR TO SUBMIT FOR APPROVAL THE FINAL SAFETY LANDING PLATFORM INSTALLATION CONFIGURATION AS RECOMMENDED BY MANUFACTURER.
4. SUBGRADE SHALL BE SCARIFIED, MOISTURE-CONDITIONED, AND COMPACTED TO A DEPTH OF 8 INCHES.
5. DEPTH OF OVEREXCAVATION SHALL BE 3' BELOW FOUNDATION OR UNTIL COMPETENT BEDROCK IS ENCOUNTERED, WHICHEVER IS GREATER.
6. LIMITS OF OVEREXCAVATION SHALL EXTEND 3' LATERALLY AWAY FROM OUTSIDE WALL OF STRUCTURE OR TO A DISTANCE EQUAL TO THE DEPTH OF OVEREXCAVATION, WHICHEVER IS GREATER.
7. PROVIDE LINK SEAL AT PIPE PENETRATIONS
8. PROVIDE 6" MINIMUM CLEARANCE ON ALL SIDES OF MANUAL OVERRIDE HANDWHEEL.
9. ACTUATED SLIDE GATE TO BE CONNECTED TO SCADA SYSTEM, SEE INSTRUMENTATION SHEETS FOR DETAILS.

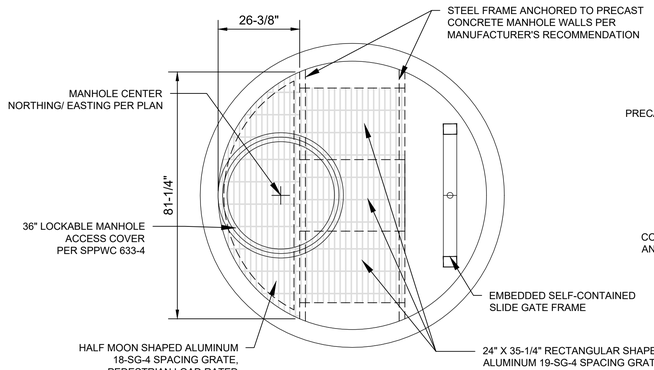

PLAN

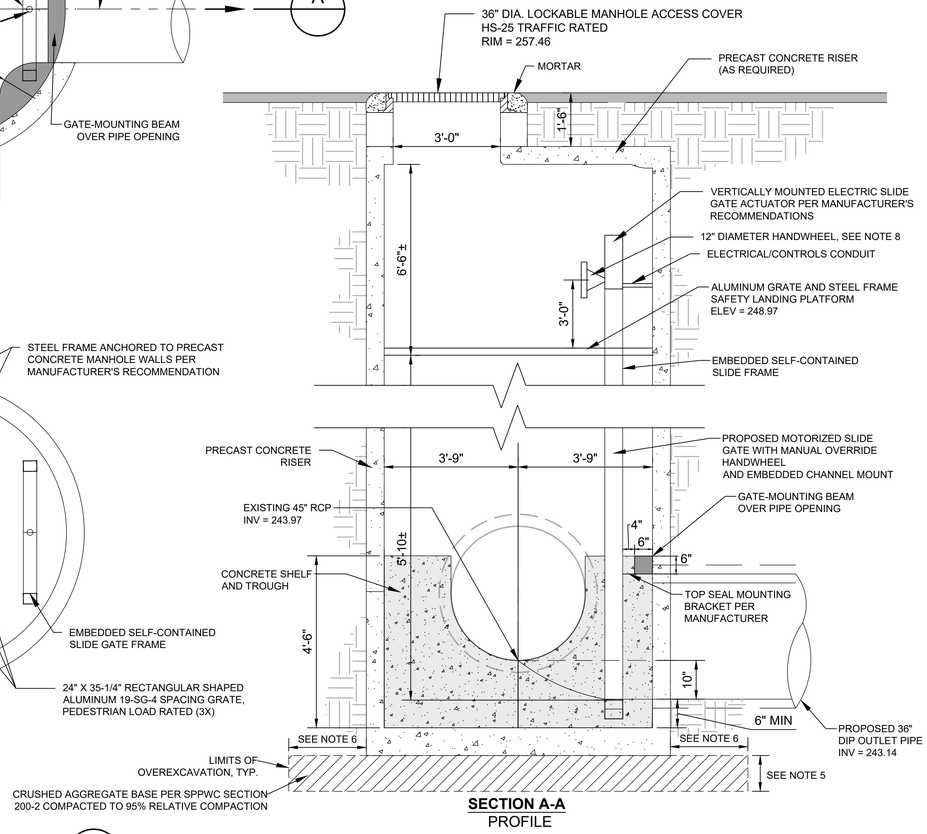

SECTION A-A
PROFILE

1 CU501 DIVERSION STRUCTURE DETAIL (DS1)
SCALE: NTS

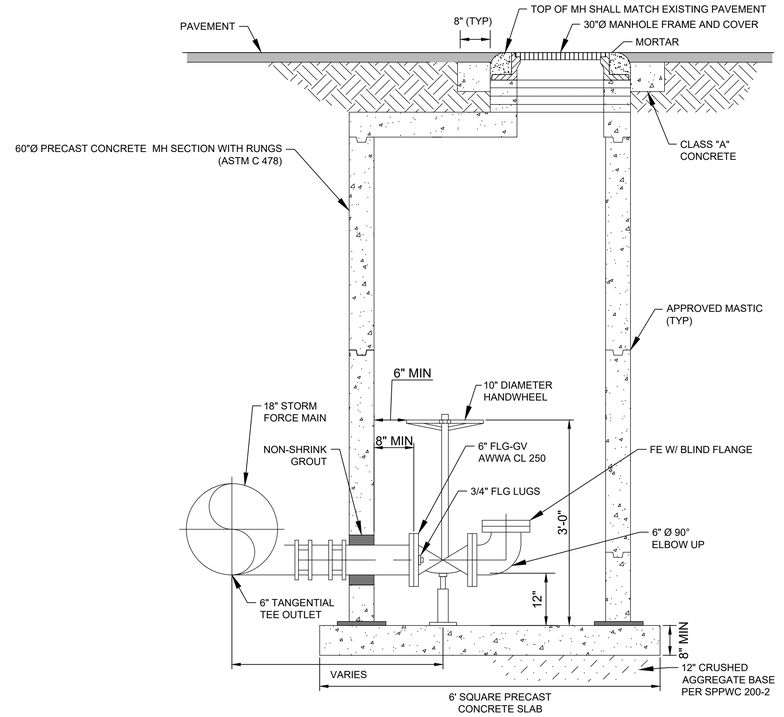

NOTES:

1. SEAL JOINTS WITH PRECAST CONCRETE JOINT SEALANT.
2. CAST IN PLACE CLASS "A" CONCRETE BASE. CAST BASE AGAINST UNDISTURBED SOIL OR 8" MIN AGGREGATE BASE COURSE UNDER BASE WHERE SOIL IS UNSTABLE.
3. FORM GROOVE IN MANHOLE BASE WITH STEEL OR ALUMINUM BASE RING PER MANUFACTURER'S DETAIL.
4. PROVIDE 6" DIAMETER RECESSED DRAINAGE SUMP AT CENTER OF MANHOLE BASE.

2 CU501 BLOWOFF VALVE ASSEMBLY DETAIL (BV1)
SCALE: NTS

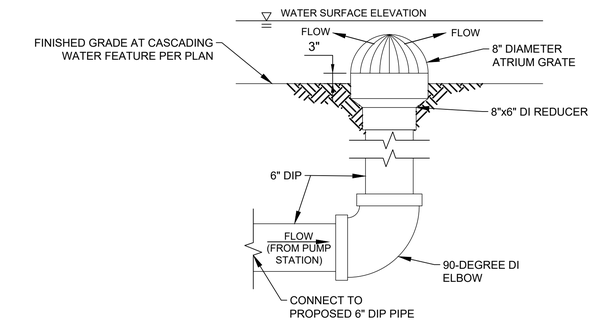

3 CU501 WATER FEATURE INLET DETAIL
SCALE: NTS

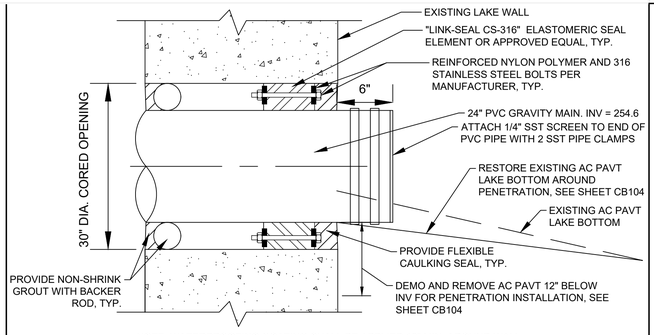

NOTE: WATERPROOFING COATING SHALL BE APPLIED 10" MIN. AROUND WALL PENETRATION PER SECTION 09800 OF THE SPECIFICATIONS, LAKE SIDE OF WALL ONLY.

4 CU501 LAKE WALL PENETRATION DETAIL
SCALE: NTS

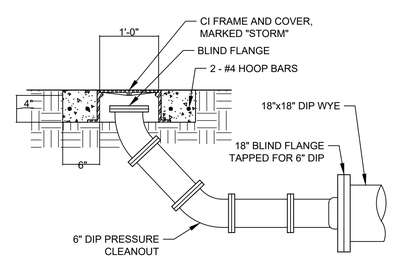

NOTES:

1. ALL FLANGES SHALL BE TAPPED TO ALLOW THE INSTALLATION OF BLIND FLANGES WITH BOLTS

5 CU501 PRESSURE CLEANOUT DETAIL
SCALE: NTS

THE CITY OF LOS ANGELES OR ITS OFFICERS OR AGENTS SHALL NOT BE RESPONSIBLE FOR THE ACCURACY OR COMPLETENESS OF ELECTRONIC COPIES OF THIS PLAN SHEET.

REVISION DATES (DESIGN STAGE ONLY)

ENGINEERING
CITY OF LOS ANGELES
Environmental Engineering Design

THIS PLAN WAS ELECTRONICALLY SIGNED AND STAMPED

REGISTERED PROFESSIONAL ENGINEER — CIVIL — STATE OF CALIFORNIA — 94417 — Stanley Semlow

BUREAU OF ENGINEERING

VERTICAL CONTROL:
HORIZONTAL CONTROL:
SHEET TITLE: CIVIL UTILITY DETAILS 1
PROJECT: MACARTHUR LAKE STORMWATER CAPTURE PROJECT
ADDRESS: MACARTHUR PARK 2230 6TH ST LOS ANGELES CA 90057

DEPARTMENT OF PUBLIC WORKS

NO	REVISIONS	DATE	BY

CIP NO. 1920R004
INDEX NO. D-XXXXX

CITY OF LOS ANGELES

DESIGN GROUP
ENGINEER: CS
ARCHITECT:
DESIGNED BY: SS
DRAWN BY: HK
CHECKED BY: RBJ/JG
APPROVED BY:
DATE

craftwater engineering, inc.
carollo

WORK ORDER
S33WMLRP, S043MSWC, S343MSWC

SHEET NAME
CU501
SHEET 23 OF 108 SHEETS

SHEET VERSION 4.0.1 FILE PATH: C:\PW_WORKING\CAROLLO_200000\D0225890\20213700CU501.DWG PLOT DATE: 1/20/2026 7:37 AM SAVED: 1/20/2026 7:22 AM SAVED BY:SHANESASAKI

FINAL DESIGN SUBMITTAL

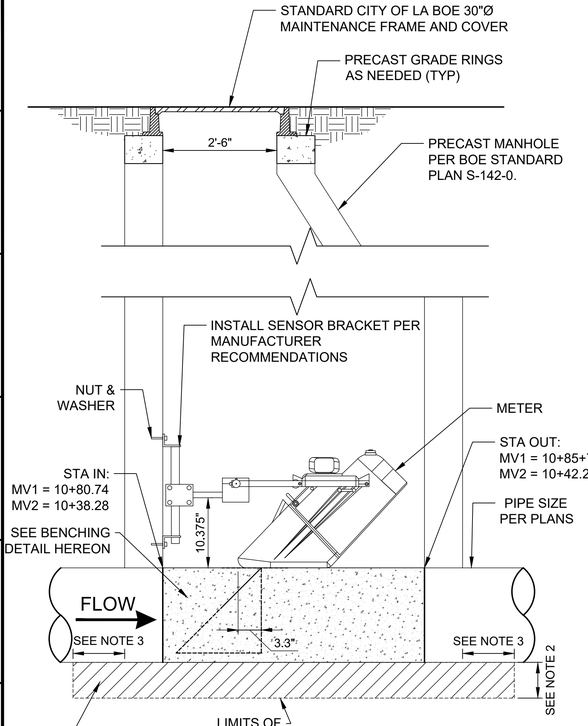

1 CU502 FLOW METER VAULT (MV1, MV2)

SCALE: NO SCALE

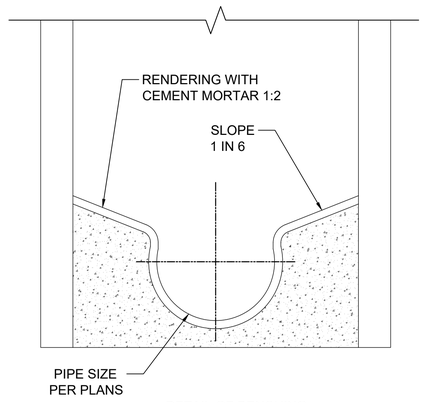

DETAIL OF BENCHING

NOTES:
1. METER TO BE HACH FLO DAR OR APPROVED EQUAL. MOUNTING PER MANUFACTURER'S RECOMMENDATIONS.
2. DEPTH OF OVEREXCAVATION SHALL BE 3' BELOW FOUNDATION OR UNTIL COMPETENT BEDROCK IS ENCOUNTERED, WHICHEVER IS GREATER.
3. LIMITS OF OVEREXCAVATION SHALL EXTEND 3' LATERALLY AWAY FROM OUTSIDE WALL OF STRUCTURE OR TO A DISTANCE EQUAL TO THE DEPTH OF OVEREXCAVATION, WHICHEVER IS GREATER.
4. SUBGRADE SHALL BE SCARIFIED, MOISTURE-CONDITIONED, AND COMPACTED TO A DEPTH OF 8 INCHES.

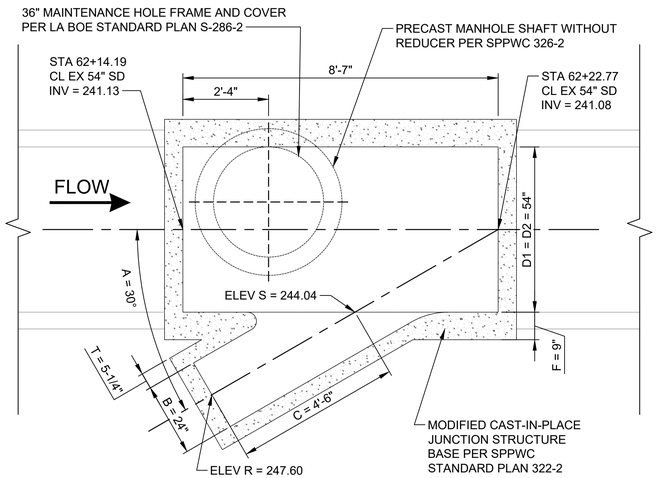

NOTES:
1. SEE SPPWC STANDARD PLAN 322-2 FOR REINFORCING DETAILS.
2. DEPTH OF OVEREXCAVATION SHALL BE 3' BELOW FOUNDATION OR UNTIL COMPETENT BEDROCK IS ENCOUNTERED, WHICHEVER IS GREATER.
3. LIMITS OF OVEREXCAVATION SHALL EXTEND 3' LATERALLY AWAY FROM OUTSIDE WALL OF STRUCTURE OR TO A DISTANCE EQUAL TO THE DEPTH OF OVEREXCAVATION, WHICHEVER IS GREATER.
4. SUBGRADE SHALL BE SCARIFIED, MOISTURE-CONDITIONED, AND COMPACTED TO A DEPTH OF 8 INCHES.

2 CU502 EX 54" SD JUNCTION STRUCTURE (JS1)

SCALE: NO SCALE

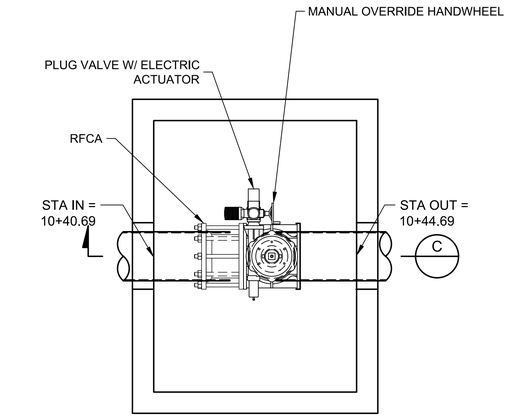

PLAN

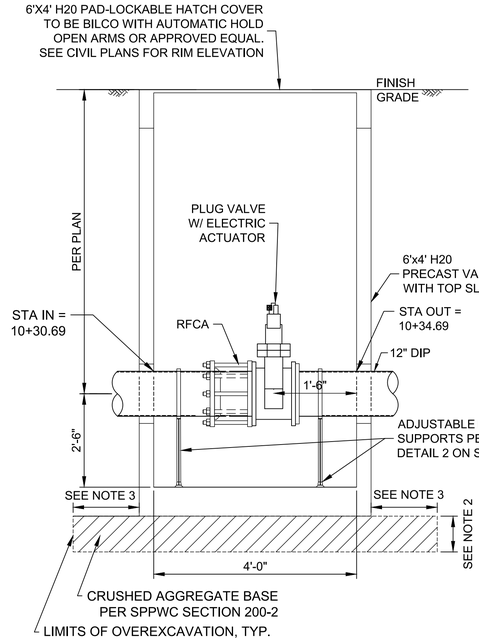

SECTION C-C

NOTES:
1. PIPE SUPPORTS TO BE PLACED AT CENTER OF EACH PIPE SECTION
2. DEPTH OF OVEREXCAVATION SHALL BE 3' BELOW FOUNDATION OR UNTIL COMPETENT BEDROCK IS ENCOUNTERED, WHICHEVER IS GREATER.
3. LIMITS OF OVEREXCAVATION SHALL EXTEND 3' LATERALLY AWAY FROM OUTSIDE WALL OF STRUCTURE OR TO A DISTANCE EQUAL TO THE DEPTH OF OVEREXCAVATION, WHICHEVER IS GREATER.
4. SUBGRADE SHALL BE SCARIFIED, MOISTURE-CONDITIONED, AND COMPACTED TO A DEPTH OF 8 INCHES.
5. PROVIDE 6" MINIMUM CLEARANCE ON ALL SIDES OF MANUAL OVERRIDE HANDWHEEL.
6. PROVIDE 6" DIAMETER RECESSED DRAINAGE SUMP AT CENTER OF VAULT BASE.

3 CU502 12" ACTUATED VALVE VAULT (VV4)

SCALE: NO SCALE

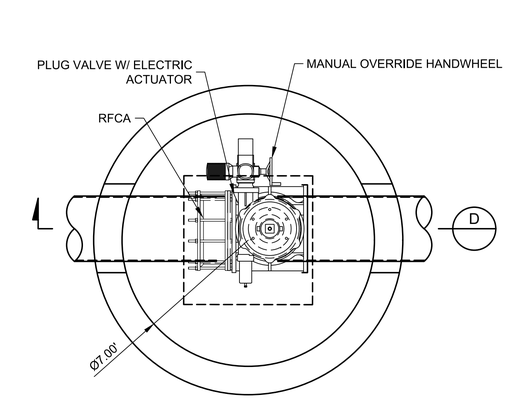

PLAN

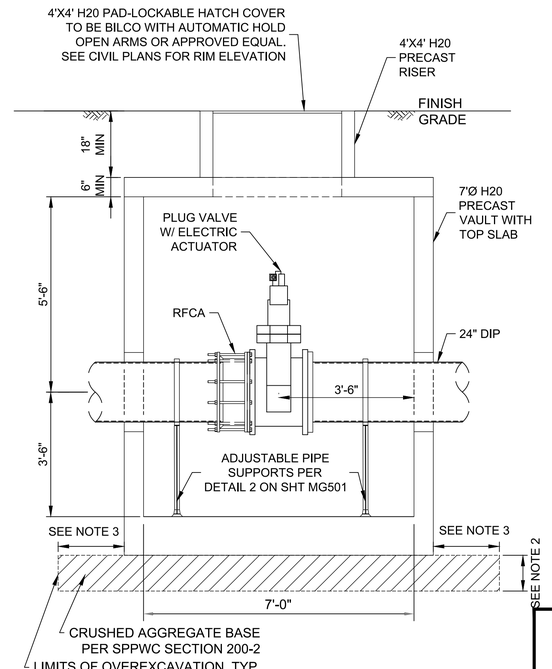

SECTION D-D

NOTES:
1. PIPE SUPPORTS TO BE PLACED AT CENTER OF EACH PIPE SECTION
2. DEPTH OF OVEREXCAVATION SHALL BE 3' BELOW FOUNDATION OR UNTIL COMPETENT BEDROCK IS ENCOUNTERED, WHICHEVER IS GREATER.
3. LIMITS OF OVEREXCAVATION SHALL EXTEND 3' LATERALLY AWAY FROM OUTSIDE WALL OF STRUCTURE OR TO A DISTANCE EQUAL TO THE DEPTH OF OVEREXCAVATION, WHICHEVER IS GREATER.
4. SUBGRADE SHALL BE SCARIFIED, MOISTURE-CONDITIONED, AND COMPACTED TO A DEPTH OF 8 INCHES.
5. PROVIDE 6" MINIMUM CLEARANCE ON ALL SIDES OF MANUAL OVERRIDE HANDWHEEL.
6. PROVIDE 6" DIAMETER RECESSED DRAINAGE SUMP AT CENTER OF VAULT BASE.

4 CU502 24" ACTUATED VALVE VAULT (VV1, VV3)

SCALE: NO SCALE

craft water engineering, inc.

carollo

ENGINEERING
CITY OF LOS ANGELES
Environmental Engineering Design

REGISTERED PROFESSIONAL ENGINEER ROBERT SEMLOW C 94417 CIVIL STATE OF CALIFORNIA

THIS PLAN WAS ELECTRONICALLY SIGNED AND STAMPED

BUREAU OF ENGINEERING

VERTICAL CONTROL:
HORIZONTAL CONTROL:
SHEET TITLE: CIVIL UTILITY DETAILS 2
PROJECT: MACARTHUR LAKE STORMWATER CAPTURE PROJECT
ADDRESS: MACARTHUR PARK 2230 6TH ST LOS ANGELES CA 90057

DEPARTMENT OF PUBLIC WORKS

NO	REVISIONS	DATE	BY

INDEX NO. D-XXXXX

CIP NO. 1920R004

CITY OF LOS ANGELES

DESIGN GROUP
ENGINEER: CS
ARCHITECT:
DESIGNED BY: SS
DRAWN BY: HK
CHECKED BY: RBJJG
APPROVED BY:
DATE

WORK ORDER S33WMLRP, S043MSWC, S343MSWC

SHEET NAME CU502

SHEET 24 OF 108 SHEETS

THE CITY OF LOS ANGELES OR IT'S OFFICERS OR AGENTS SHALL NOT BE RESPONSIBLE FOR THE ACCURACY OR COMPLETENESS OF ELECTRONIC COPIES OF THIS PLAN SHEET.

REVISION DATES (DESIGN STAGE ONLY)

FINAL DESIGN SUBMITTAL

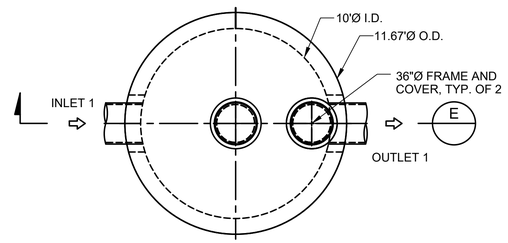

PLAN

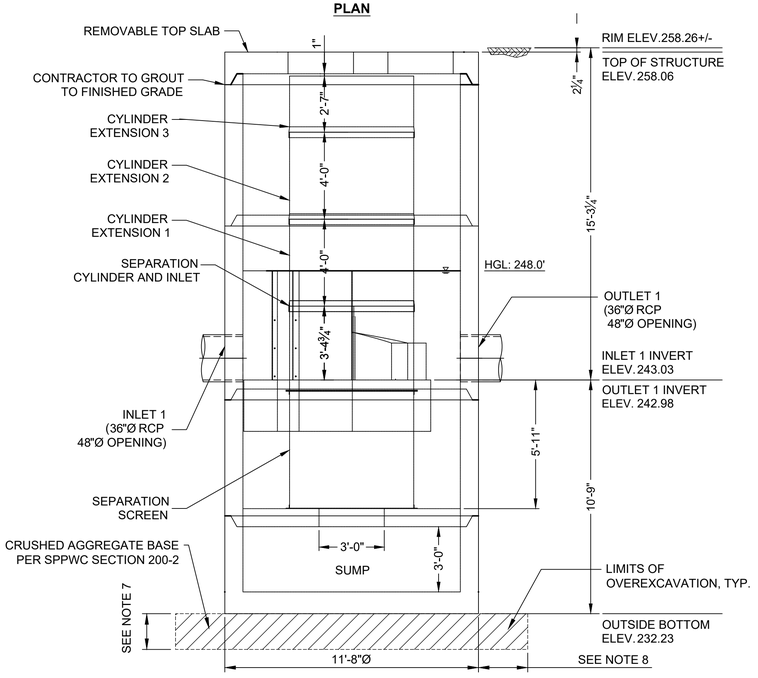

SECTION E-E

MATERIAL LIST (PROVIDED BY VENDOR)		
COUNT	DESCRIPTION	INSTALLED BY
1	5653-10 CONCENTRIC FIBERGLASS INSERT-CUSTOM	CONTRACTOR
1	5653, 4700 micron, 5.71' O.D. x 5.42' SCREEN, GREEN FLANGE UP	CONTRACTOR
1	56 SERIES HARDWARE KIT	CONTRACTOR
1	SEALANT FOR JOINTS	CONTRACTOR
2	36"Ø X 4.5" FRAME AND COVER, EJ #001580008A01, OR EQUIV., CAST-IN	VENDOR
1	36" MOSQUITO INSERT, #335-000003	VENDOR
2	56 SERIES 4' CYLINDER EXTENSION, #325-000823	VENDOR
1	56 SERIES 3' CYLINDER EXTENSION, #325-002758	VENDOR

SITE DESIGN DATA	
WATER QUALITY FLOW RATE, 125 MICRON	12.70 CFS
100% TRASH CAPTURE FLOW RATE	19.6 CFS
RETURN PERIOD OF PEAK FLOW	N/A

NOTES
1. PRETREATMENT UNIT TO BE CDS BY CONTECH OR APPROVED EQUAL.
2. PRETREATMENT UNIT TO BE INSTALLED PER MANUFACTURER'S RECOMMENDATIONS.
3. INTERNAL COMPONENTS TO BE INSTALLED ONSITE.
4. VENDOR TO PROVIDE ALL MATERIALS UNLESS NOTED OTHERWISE.
5. STRUCTURE SHALL MEET HS-25 LOAD RATING. CASTINGS TO MEET AASHTO M306.
6. STRUCTURE SHALL BE PRECAST CONCRETE CONFORMING TO ASTM C-478 AND AASHTO LOAD FACTOR DESIGN METHOD.
7. DEPTH OF OVEREXCAVATION SHALL BE 3' BELOW FOUNDATION OR UNTIL COMPETENT BEDROCK IS ENCOUNTERED, WHICHEVER IS GREATER.
8. LIMITS OF OVEREXCAVATION SHALL EXTEND 3' LATERALLY AWAY FROM OUTSIDE WALL OF STRUCTURE OR TO A DISTANCE EQUAL TO THE DEPTH OF OVEREXCAVATION, WHICHEVER IS GREATER.
9. SUBGRADE SHALL BE SCARIFIED, MOISTURE-CONDITIONED, AND COMPACTED TO A DEPTH OF 8 INCHES.
10. VAULT TO BE PROVIDED WITHOUT STEPS.
11. 36" MANHOLE FRAME AND COVERS TO BE PROVIDED PER CITY OF LOS ANGELES STANDARD PLAN S-286-2.

1 CU503 — PRETREATMENT UNIT (PT1)
SCALE: NO SCALE

SITE DESIGN DATA	
WATER QUALITY FLOW RATE	2 CFS
PEAK FLOW RATE	12.7 CFS
FILTER MEDIA TYPE	PHOSPHOSORB OR APPROVED EQUAL

MATERIAL LIST - PROVIDED BY VENDOR				
COUNT	DESCRIPTION	INSTALLED BY	INSTALLED BY	PROVIDED BY
48	27", PHOSPHOSORB CARTRIDGE	VENDOR	PRECASTER	VENDOR
48	RESTRICTOR DISK (WHT), 18.79 GPM	VENDOR	PRECASTER	VENDOR
1	FLOW KIT (85R-8)	VENDOR	PRECASTER	VENDOR
1	36" X 14" TRANSFER HOLE COVER	VENDOR	PRECASTER	VENDOR
1	JOINT SEALANT	CONTRACTOR	CONTRACTOR	PRECASTER
3 PLCS	GRADE RINGS/RISERS	CONTRACTOR	CONTRACTOR	PRECASTER
3	36"Ø x 4" FRAME AND COVER, EJ #001810119A02, NV	CONTRACTOR	CONTRACTOR	VENDOR
1	STORMFILTER ACTIVATION DISK	VENDOR	PRECASTER	VENDOR

NOTES
1. SECONDARY TREATMENT UNIT TO BE STORMFILTER BY CONTECH OR APPROVED EQUAL.
2. SECONDARY TREATMENT UNIT TO BE INSTALLED PER MANUFACTURER'S RECOMMENDATIONS.
3. VENDOR TO PROVIDE ALL MATERIALS UNLESS NOTED OTHERWISE.
4. STRUCTURE SHALL MEET HS-20 LOAD RATING. CASTINGS TO MEET AASHTO M306.
5. STRUCTURE SHALL BE PRECAST CONCRETE CONFORMING TO ASTM C-857 AND AASHTO LOAD FACTOR DESIGN METHOD.
7. DEPTH OF OVEREXCAVATION SHALL BE 3' BELOW FOUNDATION OR UNTIL COMPETENT BEDROCK IS ENCOUNTERED, WHICHEVER IS GREATER.
8. LIMITS OF OVEREXCAVATION SHALL EXTEND 3' LATERALLY AWAY FROM OUTSIDE WALL OF STRUCTURE OR TO A DISTANCE EQUAL TO THE DEPTH OF OVEREXCAVATION, WHICHEVER IS GREATER.
9. SUBGRADE SHALL BE SCARIFIED, MOISTURE-CONDITIONED, AND COMPACTED TO A DEPTH OF 8 INCHES.
10. VAULT TO BE PROVIDED WITHOUT STEPS.
11. 36" MANHOLE FRAME AND COVERS TO BE PROVIDED PER CITY OF LOS ANGELES STANDARD PLAN S-286-2.

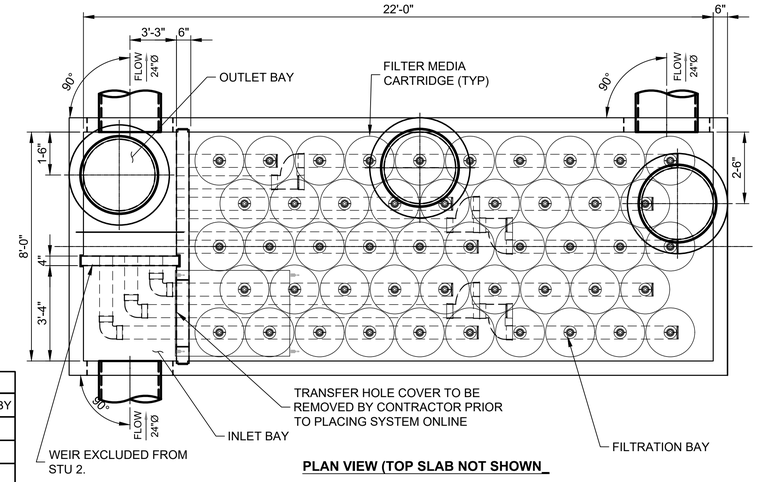

PLAN VIEW (TOP SLAB NOT SHOWN

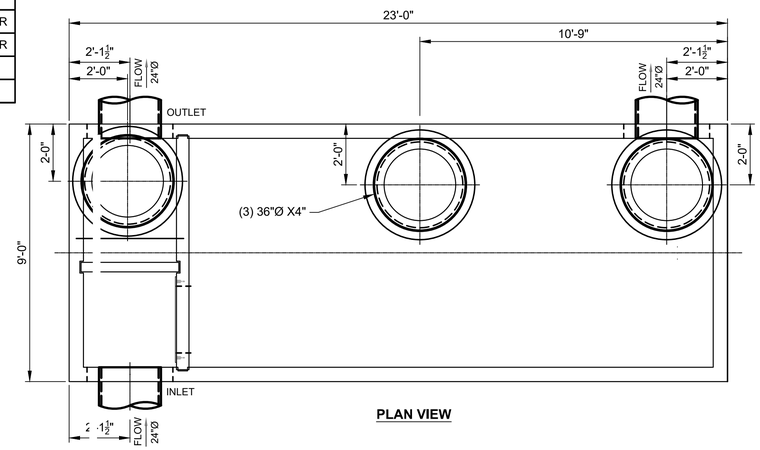

PLAN VIEW

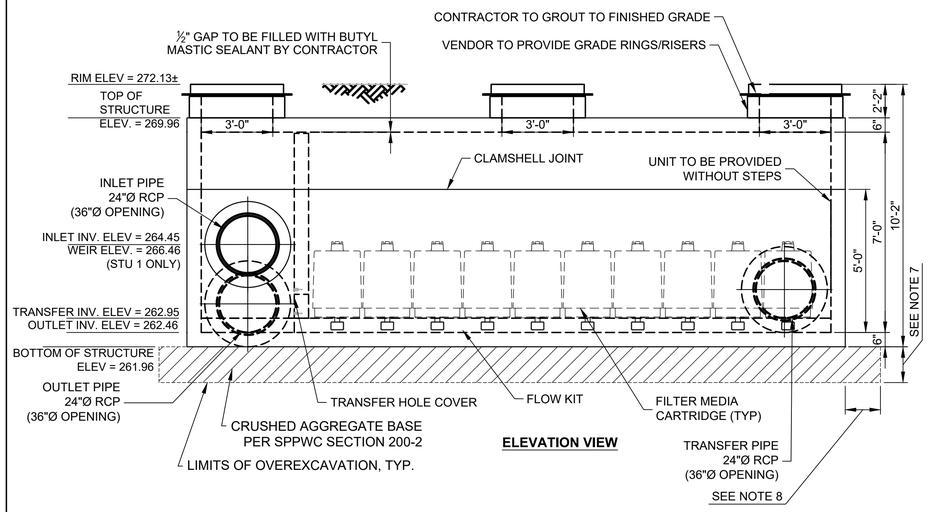

ELEVATION VIEW

2 CU503 — SECONDARY TREATMENT UNIT (STU)
SCALE: NO SCALE

ENGINEERING
CITY OF LOS ANGELES
Environmental Engineering Division

REGISTERED PROFESSIONAL ENGINEER — COLIN INKET SEMLOW — C 94417 — CIVIL — STATE OF CALIFORNIA

• THIS PLAN WAS ELECTRONICALLY SIGNED AND STAMPED •

BUREAU OF ENGINEERING
VERTICAL CONTROL:
HORIZONTAL CONTROL:
SHEET TITLE: CIVIL UTILITY DETAILS 3
PROJECT: MACARTHUR LAKE STORMWATER CAPTURE PROJECT
ADDRESS: MACARTHUR PARK 2230 6TH ST LOS ANGELES CA 90057

DEPARTMENT OF PUBLIC WORKS
CITY OF LOS ANGELES

NO	REVISIONS	DATE	BY

CIP NO. 1920R004
INDEX NO. D-XXXXX

craftwater engineering, inc.
carollo

DESIGN GROUP
ENGINEER: CS
ARCHITECT:
DESIGNED BY: SS
DRAWN BY: HK
CHECKED BY: RBJ/JG
APPROVED BY:

WORK ORDER S33WMLRP, S043MSWC, S343MSWC

SHEET NAME CU503
SHEET 25 OF 108 SHEETS

REVISION DATES (DESIGN STAGE ONLY)

THE CITY OF LOS ANGELES OR ITS OFFICERS OR AGENTS SHALL NOT BE RESPONSIBLE FOR THE ACCURACY OR COMPLETENESS OF ELECTRONIC COPIES OF THIS PLAN SHEET.

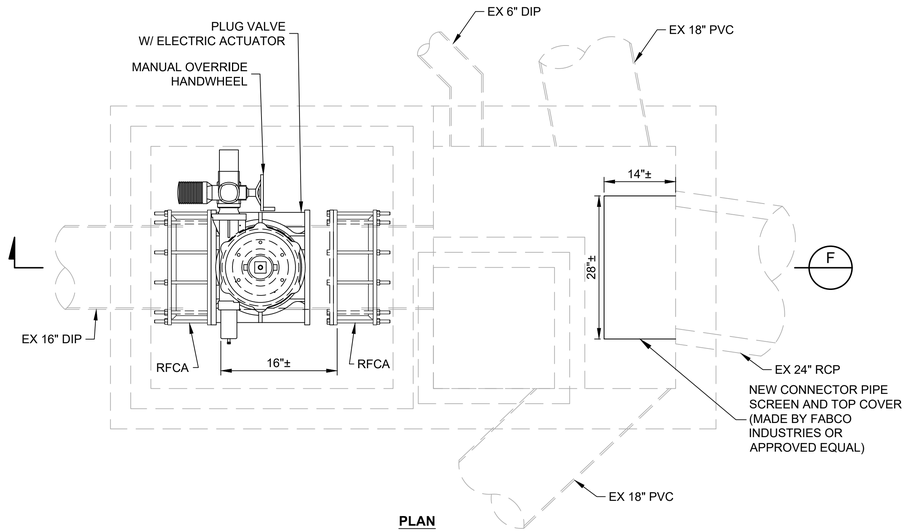

PLAN

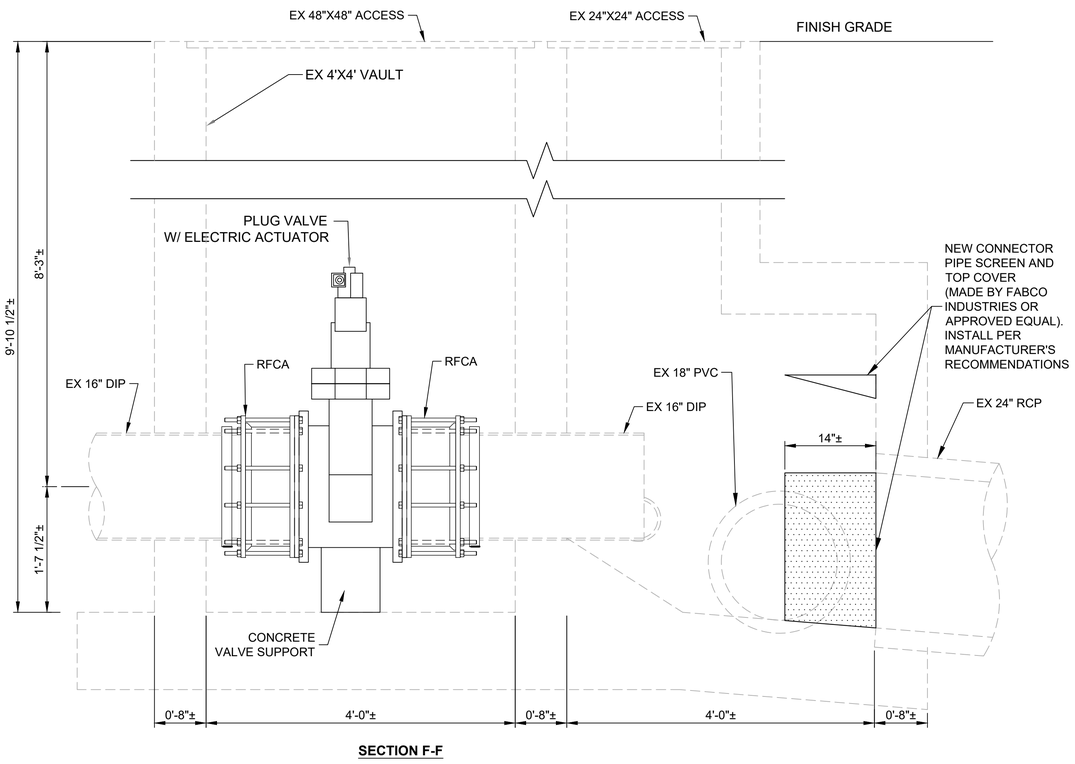

SECTION F-F

NOTES
1. CONTRACTOR TO REMOVE EX 16" RESTRAINER GLANDS AND EX 16" GATE VALVE.
2. CONTRACTOR TO INSTALL NEW 16" RESTRAINED FLANGED COUPLING ADAPTERS AND 16" PLUG VALVE.
3. PROVIDE 6" MINIMUM CLEARANCE ON ALL SIDES OF MANUAL OVERRIDE HANDWHEEL.
4. RESTRAINED FLANGED COUPLING ADAPTERS SHALL BE SERIES 2100 MEGAFLANGE® BY EBAA IRON, INC., OR APPROVED EQUAL.

1 / CU504 — EXISTING LAKE DRAIN VAULT (VV2)
SCALE: NO SCALE

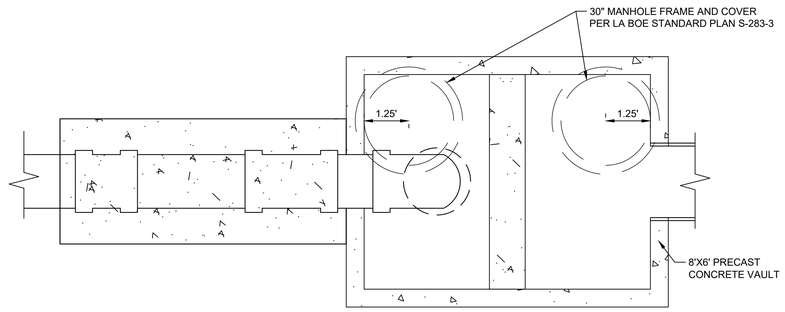

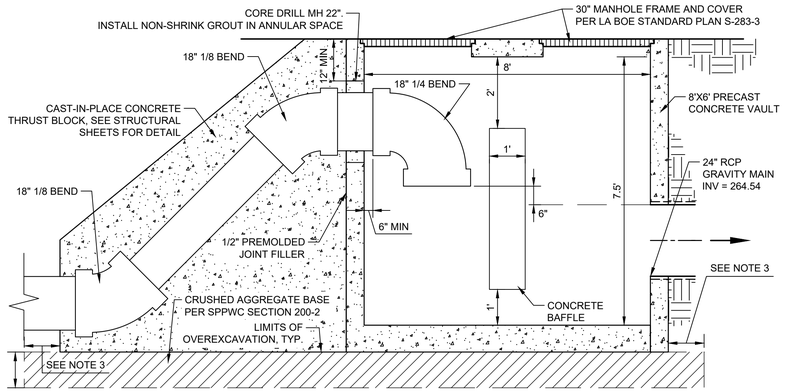

NOTES:
1. COAT INTERIOR OF DIP OR RCP GRAVITY MAIN AND DIP FORCE MAINS PER SPECIFICATION SECTION 09800.
2. DEPTH OF OVEREXCAVATION SHALL BE 3' BELOW FOUNDATION OR UNTIL COMPETENT BEDROCK IS ENCOUNTERED, WHICHEVER IS GREATER.
3. LIMITS OF REMEDIAL GRADING SHALL EXTEND 3' LATERALLY AWAY FROM OUTSIDE WALL OF STRUCTURE OR TO A DISTANCE EQUAL TO THE DEPTH OF OVEREXCAVATION, WHICHEVER IS GREATER.
4. SUBGRADE SHALL BE SCARIFIED, MOISTURE-CONDITIONED, AND COMPACTED TO A DEPTH OF 8 INCHES.
5. PRIOR TO ACCEPTANCE, MANHOLE SHALL UNDERGO HYDROSTATIC TESTING TO 10 PSI AS DESCRIBED IN SECTION 15620 OF THE SPECIFICATIONS.

2 / CU504 — PRESSURE-TO-GRAVITY TRANSITION MANHOLE (TS1) DETAIL
SCALE: NO SCALE

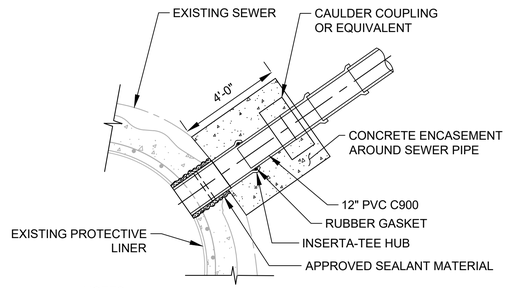

NOTES
1. REQUIRED ACCESS TO CONSTRUCT CONNECTION NOT SHOWN.
2. THE CONTRACTOR SHALL REPAIR THE EXISTING PVC SHEET LINER AT THE POINT OF CONNECTION AFTER THE CONNECTION IS ESTABLISHED.

3 / CU504 — SEWER CONNECTION DETAIL
SCALE: NO SCALE

ENGINEERING
CITY OF LOS ANGELES
Environmental Engineering Division

REGISTERED PROFESSIONAL ENGINEER — COURTNEY T. SEMLOW — 94417 — CIVIL — STATE OF CALIFORNIA
• THIS PLAN WAS ELECTRONICALLY SIGNED AND STAMPED •

BUREAU OF ENGINEERING
VERTICAL CONTROL:
HORIZONTAL CONTROL:
SHEET TITLE: CIVIL UTILITY DETAILS 4
PROJECT: MACARTHUR LAKE STORMWATER CAPTURE PROJECT
ADDRESS: MACARTHUR PARK 2230 6TH ST LOS ANGELES CA 90057

DEPARTMENT OF PUBLIC WORKS
CITY OF LOS ANGELES
NO. | REVISIONS | DATE | BY
DESIGN GROUP
ENGINEER: CS
ARCHITECT:
DESIGNED BY: SS
DRAWN BY: HK
CHECKED BY: RBJ/JG
APPROVED BY:
CIP NO. 1920R004
INDEX NO. D-XXXXX
WORK ORDER S33WMLRP, S043MSWC, S343MSWC
SHEET NAME CU504
SHEET 26 OF 108 SHEETS

craft water engineering, inc.
carollo

REVISION DATES (DESIGN STAGE ONLY)

THE CITY OF LOS ANGELES OR ITS OFFICERS OR AGENTS SHALL NOT BE RESPONSIBLE FOR THE ACCURACY OR COMPLETENESS OF ELECTRONIC COPIES OF THIS PLAN SHEET.

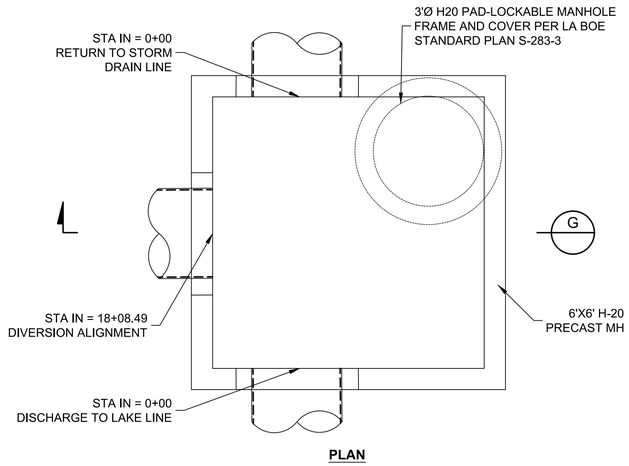

PLAN

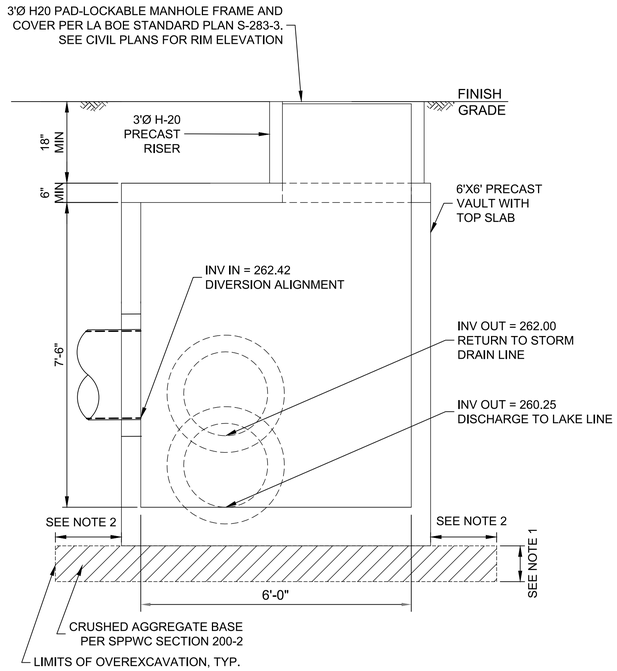

SECTION G-G

NOTES:
1. DEPTH OF OVEREXCAVATION SHALL BE 3' BELOW FOUNDATION OR UNTIL COMPETENT BEDROCK IS ENCOUNTERED, WHICHEVER IS GREATER.
2. LIMITS OF OVEREXCAVATION SHALL EXTEND 3' LATERALLY AWAY FROM OUTSIDE WALL OF STRUCTURE OR TO A DISTANCE EQUAL TO THE DEPTH OF OVEREXCAVATION, WHICHEVER IS GREATER.
3. SUBGRADE SHALL BE SCARIFIED, MOISTURE-CONDITIONED, AND COMPACTED TO A DEPTH OF 8 INCHES.

1 / CU505 — DISTRIBUTION MANHOLE DETAIL
SCALE: NO SCALE

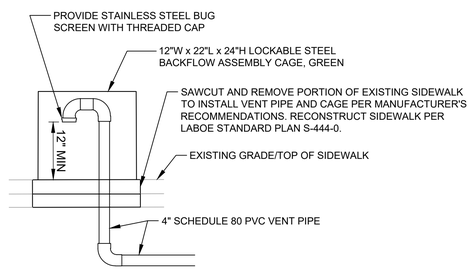

2 / CU505 — VENT PIPE OUTLET DETAIL
SCALE: NO SCALE

craft water engineering, inc.

carollo

ENGINEERING
CITY OF LOS ANGELES
Environmental Engineering Division

REGISTERED PROFESSIONAL ENGINEER — COURTNEY SEMLOW — C 94417 — CIVIL — STATE OF CALIFORNIA

THIS PLAN WAS ELECTRONICALLY SIGNED AND STAMPED

BUREAU OF ENGINEERING
VERTICAL CONTROL:
HORIZONTAL CONTROL:
SHEET TITLE: CIVIL UTILITY DETAILS 5
PROJECT: MACARTHUR LAKE STORMWATER CAPTURE PROJECT
ADDRESS: MACARTHUR PARK 2230 6TH ST LOS ANGELES CA 90057

DEPARTMENT OF PUBLIC WORKS
NO. | REVISIONS | DATE | BY

CIP NO. 1920R004

INDEX NO. D-XXXXX

CITY OF LOS ANGELES
DESIGN GROUP
ENGINEER: CS
ARCHITECT:
DESIGNED BY: SS
DRAWN BY: HK
CHECKED BY: RBJ/JG
APPROVED BY:
DATE

WORK ORDER
S33WMLRP, S043MSWC, S343MSWC

SHEET NAME
CU505
SHEET 26 OF 108 SHEETS

THE CITY OF LOS ANGELES OR ITS OFFICERS OR AGENTS SHALL NOT BE RESPONSIBLE FOR THE ACCURACY OR COMPLETENESS OF ELECTRONIC COPIES OF THIS PLAN SHEET.

REVISION DATES (DESIGN STAGE ONLY)

LANDSCAPING ABBREVIATIONS (FOR LANDSCAPE ARCHITECTURE PURPOSE ONLY)

&	AND
@	AT
#	NUMBER
%	PERCENT
A.C.	ASPHALTIC CONCRETE
AD	AREA DRAIN
ADJ.	ADJACENT
AGG	AGGREGATE
AM	APICAL MERISTEM
APPROX	APPROXIMATE
ARCH.	ARCHITECTURE / ARCHITECT
ASTM	AMERICAN SOCIETY OF TESTING & MATERIALS
ASSY	ASSEMBLY
AVG	AVERAGE
BC	BOTTOM OF CURB
BCR	BEGIN CURB RADIUS
BET	BETWEEN
BFP	BACK FLOW PREVENTER
BLDG.	BUILDING
BS	BOTTOM OF STEP
BTH	BROWN TRUNK HEIGHT
BW	BOTTOM OF WALL
C.I.P.	CAST IN PLACE
C.J.	CONSTRUCTION JOINT
CL	CENTER LINE
CLR	CLEAR
CMB	CRUSHED MISCELLANEOUS BASE
CMU	CONCRETE MASONRY UNIT
CONC.	CONCRETE
CONT.	CONTINUOUS
CORP.	CORPORATION
CY	CUBIC YARD
d	PENNY (NAIL SIZE)
DEG	DEGREE
D.G.	DECOMPOSED GRANITE
D.I.	DRAIN INLET
D,DIA.	DIAMETER
DIAG	DIAGONAL
DIM	DIMENSION
DWGS.	DRAWINGS
(E)	EXISTING
EA.	EACH
E.J.	EXPANSION JOINT
ENGR	ENGINEER
EX.	EXISTING
ETC.	ETCETERA
E.W.	EACH WAY
F.D.C.	FIRE DEPARTMENT CONNECTIONS
FDTN	FOUNDATION
FFE	FINISH FLOOR ELEVATION
FF	FINISH FLOOR
FG	FINISH GRADE
FIN.	FINISH
FS	FINISH SURFACE
FTG.	FOOTING
GA	GAUGE
GAL	GALLON
GALV.	GALVANIZED
GPM	GALLON PER MINUTE
H.B.	HEADERBOARD
HDWR	HARDWARE
H,HT.	HEIGHT
HOR.	HORIZONTAL, HORIZONTALLY
HP	HIGH POINT
HSS	HOLLOW STRUCTURAL STEEL
ID	INSIDE DIAMETER
IRRIG	IRRIGATION
L	LENGTH
LB.	POUND
L.F.	LINEAR FEET
L.O.W.	LIMIT OF WORK
LP	LOW POINT
MAX.	MAXIMUM
M.E.P.	MECHANICAL, ELECTRICAL, PLUMBING
MIN.	MINIMUM
(N)	NEW
NAT.	NATURAL
NOM	NOMINAL
N.I.C.	NOT IN CONTRACT
N.T.E.	NOT TO EXCEED
N.T.S.	NOT TO SCALE
O.C.	ON CENTER
O.D.	OUTSIDE DIAMETER
OF/CI	OWNER FURNISHED/CONTRACTOR INSTALLED
P.A., PA	PLANTING AREA
PERF	PERFORATED
P.O.B.	POINT OF BEGINNING
POC	POINT OF CONNECTION
POT	POINT OF TANGENCY
PP	POWER POLE
PL	PROPERTY LINE
PSI	POUNDS PER SQUARE INCH
PTDF	PRESSURE TREATED DOUGLAS FIR
PT	PRESSURE TREATED
PVC	POLY VINYL CHLORIDE
QCV	QUICK COUPLING VALVE
QTY	QUANTITY
R.	RISER
R, RAD.	RADIUS
RAP	DEPARTMENT OF RECREATION AND PARKS
R.C.B.	ROOT CONTROL BARRIER
RCV	REMOTE CONTROL VALVE
REINF.	REINFORCED
REP.	REPRESENTATIVE
R.O.W.	RIGHT-OF-WAY
S.C.	SAWCUT JOINT
SE	STRUCTURAL ENGINEER
SCH.	SCHEDULE
SF	SQUARE FEET
SIM.	SIMILAR
S.J.	SCORE JOINT
S.L.	SCORELINE
SPECS	CONTRACT SPECIFICATIONS
SQ.	SQUARE
SS	STAINLESS STEEL
STD.	STANDARD
SYM	SYMMETRICAL
S4S	SURFACED FOUR SIDES
T.	TREAD
T.B.D.	TO BE DETERMINED
TC	TOP OF CURB
TF	TOP OF FOOTING
TG	TOP OF GRATE
TS	TUBULAR STEEL
TW	TOP OF WEIR
TYP.	TYPICAL
VERT.	VERTICAL, VERTICALLY
V.I.F.	VERIFY IN FIELD
W	WIDTH
W/	WITH
WL	WATER LEVEL
W.W.M.	WELDED WIRE MESH
W.S.E.	WATER SURFACE ELEVATION

GENERAL NOTES

REFER TO GENERAL CONDITIONS AND GENERAL REQUIREMENTS FOR THE PROJECT.

DIRECT ANY QUESTIONS REGARDING THESE PLANS TO :
STUDIO-MLA
251 S. MISSION RD.
LOS ANGELES, CA 90033
213-384-3844

ATTN: KUSH PAREKH - DESIGN LEAD
IAN MILLER - PROJECT MANAGER

SYMBOLS

PROPERTY LINE
RIGHT-OF-WAY
LIMIT OF WORK LINE
MATCHLINE (MATCHLINE REFER TO LXXX)
CENTER LINE
SECTION
ELEVATION
DETAIL
ALIGN
POINT OF BEGINNING/ ORIGIN POINT OF LAYOUT
DETAIL SECTION
KEYNOTE (A-101)
CALLOUT

SHEET INDEX (FOR LANDSCAPE ARCHITECTURE PURPOSE ONLY)

LEGEND

SHEET NOT ISSUED	
ISSUED FOR INFORMATION AND COORDINATION	●
SHEET DELETED	∅
SHEET SCOPE COMPLETED PREVIOUSLY	□

		50% DESIGN DRAWINGS	90% DESIGN DRAWINGS	100% DESIGN DRAWINGS	
LG001	GENERAL NOTES & SHEET INDEX	●	●	●	
LG002	OVERALL REFERENCE PLAN	●	∅	∅	
LS100	TREE DISPOSITION NOTES & SCHEDULE		●	●	
LS101	LANDSCAPE DEMOLITION & TREE PROTECTION PLAN, SHEET 1		●	●	
LS102	LANDSCAPE DEMOLITION & TREE PROTECTION PLAN, SHEET 2			●	
LS200	CONSTRUCTION NOTES & SCHEDULE	●	●	●	
LS201	LANDSCAPE CONSTRUCTION PLAN	●	●	●	
LS501	ELEVATIONS & SECTIONS	●	●	∅	
LS601	LANDSCAPE CONSTRUCTION DETAILS, SHEET 1	●	●	●	
LS602	LANDSCAPE CONSTRUCTION DETAILS, SHEET 2	●	●	●	
LS603	LANDSCAPE CONSTRUCTION DETAILS, SHEET 3			●	
LI700A	IRRIGATION NOTES	●	●	●	
LI700B	IRRIGATION SCHEDULE & CALCULATIONS	●	●	●	
LI700C	HYDROZONE PLAN			●	
LI701	IRRIGATION PLAN, SHEET 1	●	●	●	
LI702	IRRIGATION PLAN, SHEET 2		●	●	
LI710	IRRIGATION DETAILS, SHEET 1	●	●	●	
LI711	IRRIGATION DETAILS, SHEET 2		●	●	
LI712	IRRIGATION AS-BUILT DRAWINGS			●	
LP800	PLANTING NOTES & SCHEDULE	●	●	●	
LP801	PLANTING PLAN, SHEET 1	●	●	●	
LP802	PLANTING PLAN, SHEET 2		●	●	
LP810	PLANTING DETAILS	●	●	●	

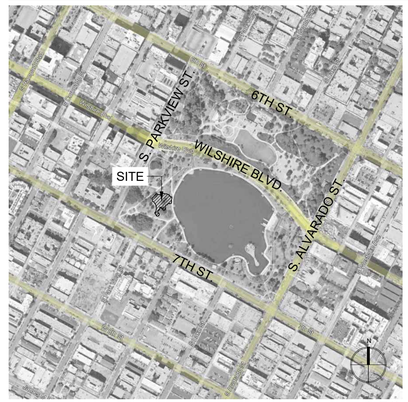

N.T.S.

VICINITY MAP

LADBS APPROVAL

carollo

ENGINEERING
CITY OF LOS ANGELES
Environmental Engineering Division

THIS PLAN WAS ELECTRONICALLY SIGNED AND STAMPED

LICENSED LANDSCAPE ARCHITECT
JAE DYER
5623
11-30-26
11-22-26
STATE OF CALIFORNIA

BUREAU OF ENGINEERING
VERTICAL CONTROL:
HORIZONTAL CONTROL:
SHEET TITLE: GENERAL NOTES & SHEET INDEX
PROJECT: MACARTHUR LAKE STORMWATER CAPTURE PROJECT
ADDRESS: MACARTHUR PARK 2230 6TH ST LOS ANGELES CA 90057

DEPARTMENT OF PUBLIC WORKS
NO. | REVISIONS | DATE | BY

CIP NO. 1920R004

INDEX NO. D-XXXXX

CITY OF LOS ANGELES
DESIGN GROUP | DATE
ENGINEER:
ARCHITECT: KUSH PAREKH
DESIGNED BY: KUSH PAREKH
DRAWN BY: IAN MILLER, AILSA THAI
CHECKED BY:
APPROVED BY:

WORK ORDER
S33WMLRP, S043MSWC, S343MSWC

SHEET NAME
LG001
SHEET 28 OF 108 SHEETS

THE CITY OF LOS ANGELES OR ITS OFFICERS OR AGENTS SHALL NOT BE RESPONSIBLE FOR THE ACCURACY OR COMPLETENESS OF ELECTRONIC COPIES OF THIS PLAN SHEET.

REVISION DATES (DESIGN STAGE ONLY)

SHEET VERSION 4.0.1 FILE PATH: P:\MPR 2021 MACARTHUR PARK REHABILITATION\CAD\PROJECTWISE FILES\10 SHEETS\20213700LG001.DWG PLOT DATE: 1/21/2026 12:05 PM SAVED: 12/19/2025 11:35 AM SAVED BY:AILSA

FINAL DESIGN SUBMITTAL

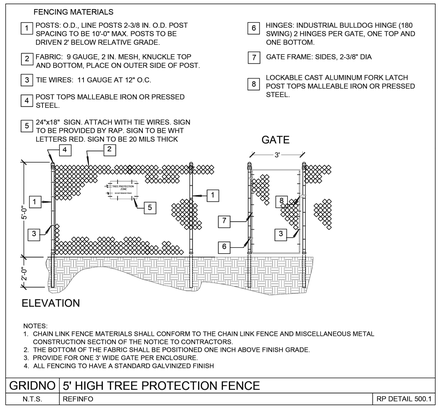

1 RAP TREE PROTECTION FENCING

1" = 1" P-MPR2021-311210-02

TREE PROTECTION

SYMBOL	ITEM/DESCRIPTION
#XXX	EXISTING TREE TO REMAIN
#XXX	EXISTING PALM TO REMAIN
RL	EXISTING TREE TO BE RELOCATED
X #XXX	EXISTING TREE TO BE REMOVED
X	EXISTING PALM TO BE REMOVED
D-101	TREE PROTECTION FENCING, SEE DETAIL 1/LS100
	TREE PROTECTION ZONE
D-102	AREA OF TURF REMOVAL

RAP TREE PROTECTION SPECIFICATIONS

1.01 TREE PROTECTION

I. ALL TREES THAT OCCUR WITHIN THE AREA OF WORK, AS SHOWN ON THE PLANS, AND NOT SPECIFICALLY DESIGNATED FOR REMOVAL, SHALL BE PROTECTED BY THE FOLLOWING MEANS:

A. DETERMINING THE TREE PROTECTION ZONE (TPZ) - THE RADIUS (NOT THE DIAMETER) OF THE TPZ, MEASURED FROM THE OUTSIDE OF THE TREE TRUNK, SHALL BE CALCULATED BY RECREATION AND PARKS (RAP) FORESTRY ACCORDING TO THE FOLLOWING:

1. SINGLE TRUNK TREES - MULTIPLY THE TRUNK DIAMETER IN INCHES, MEASURED 4.5' ABOVE GRADE, BY 1.5 FEET.
2. MULTI TRUNK TREES - MULTIPLY THE SUM OF THE DIAMETERS OF ALL TRUNKS IN INCHES, MEASURED 4.5' ABOVE GRADE, BY 1.5 FEET.
3. PALM TREES - 5' FROM THE BASE OF THE TRUNK.

B. ONCE DETERMINED, THE TPZ IS TO BE CLEARLY SHOWN ON ALL PLANS, INCLUDING CONCEPT PLANS, FOR DISCUSSION PURPOSES, INCLUDING AT THE RAP CAPITAL IMPROVEMENTS MEETINGS.

C. BEYOND THE TPZ, THE CONTRACTOR SHALL ALSO BE RESPONSIBLE FOR PROTECTING ALL TREES WITHIN THE BOUNDARIES OF THE CONSTRUCTION ZONE, INCLUDING VEHICULAR ACCESS AREAS LEADING TO THE CONSTRUCTION ZONE, LAY DOWN AREAS, AND ANY OTHER AREAS IMPACTED BY CONSTRUCTION ACTIVITIES. ANY DAMAGE TO TREES IN THESE AREAS SHALL ALSO BE SUBJECT TO THE SAME MONETARY OR REPLACEMENT REQUIREMENTS SPECIFIED IN SECTION II BELOW. ANY NECESSARY ROOT CUTTING IN THIS AREA MUST BE CONFIRMED WITH EITHER THE RAP OR OTHER APPROVED ARBORIST. SEE ALSO THE GENERAL CONDITIONS FOR ANY DAMAGE DONE BY THE CONTRACTOR TO LANDSCAPING OR OTHER PARK AMENITIES THAT FALL OUTSIDE THE BOUNDARIES OF THE CONSTRUCTION ZONE.

D. WITHIN THE BOUNDARIES OF THE CONSTRUCTION ZONE (INCLUDING THE TPZ), THE CONTRACTOR SHALL BE RESPONSIBLE FOR MITIGATING CONSTRUCTION-RELATED DUST ACCUMULATION ON ALL TREES BY SPRAYING THE TRUNKS, LIMBS, AND FOLIAGE WITH WATER TO A MAXIMUM HEIGHT OF 30 FEET DURING THE MONTHS OF APRIL THROUGH NOVEMBER, AT MONTHLY INTERVALS.

E. WITHIN THE TPZ, THE CONTRACTOR SHALL ADHERE TO THE FOLLOWING REQUIREMENTS, INCLUDING, BUT NOT LIMITED TO:

1. NO STOCKPILING OR STORAGE OF ANY MATERIAL, DEBRIS, OR SOIL.
2. NO STORAGE OF ANY CONSTRUCTION EQUIPMENT.
3. NO VEHICULAR ACCESS.
4. NO CUTTING OF ROOTS.
5. NO DISTURBANCE OF SOIL OR GRADE CHANGES.
6. NO OBJECTS OF ANY KIND TO BE ATTACHED TO TREE TRUNKS.

F. THE CONTRACTOR SHALL INSTALL A 5' HIGH TEMPORARY CHAIN LINK FENCE WITH ONE PEDESTRIAN ACCESS GATE ALONG THE BOUNDARY OF THE TPZ. SEE 5' HIGH TREE PROTECTION FENCE DETAIL ON THIS SHEET.

G. THE CONTRACTOR SHALL PROVIDE ONE SIGN PER EACH 20 LINEAL FT. OF FENCE BORDERING THE TPZ INDICATING THAT FENCING SHALL NOT BE REMOVED. SEE SIGN DETAIL THAT IS INCLUDED AS PART OF THE TEMPORARY CHAIN LINK DETAIL.

H. NO WORK IS PERMITTED WITHIN THE TPZ WITHOUT THE APPROVAL OF EACH OF THE FOLLOWING: 1) THE PROJECT LANDSCAPE ARCHITECT, 2) THE PROJECT MANAGER, AND 3) RAP FORESTRY STAFF. ANY WORK AUTHORIZED WITHIN THE TPZ MUST BE DONE IN ACCORDANCE WITH THE RECOMMENDATIONS OF A RAP ARBORIST AND UNDER THE SUPERVISION OF A MONITORING ARBORIST. A MONITORING ARBORIST MUST BE: 1) AN ISA CERTIFIED ARBORIST OR A REGISTERED CONSULTING ARBORIST, WITH VERIFIABLE EXPERIENCE IN PROTECTING TREES DURING CONSTRUCTION; 2) APPROVED BY RAP FORESTRY. THE MONITORING ARBORIST SHALL BE HIRED AND PAID BY THE CONTRACTOR.

I. IN TPZ AREAS WHERE EXCAVATION HAS BEEN APPROVED, SPECIAL METHODS MAY BE REQUIRED BY RAP FORESTRY TO AVOID DAMAGE TO TREE ROOTS TO REMAIN OUTSIDE OF THE EXCAVATED AREA, INCLUDING HAND TRENCHING TO IDENTIFY AND SAFELY CUT AFFECTED ROOTS BEFORE MACHINE EXCAVATION IS PERFORMED.

J. IRRIGATION TO ALL TREES NOT SPECIFICALLY DESIGNATED FOR REMOVAL SHALL BE KEPT IN OPERATION FOR THE DURATION OF THE PROJECT. CONTRACTOR SHALL BE RESPONSIBLE FOR HAND WATERING ALL IMPACTED TREES IF NECESSITATED BY TEMPORARY SHUTDOWNS TO EXISTING IRRIGATION SYSTEMS. TREES ARE TO BE IRRIGATED DEEPLY AND INFREQUENTLY SO THAT SOIL MOISTURE IS DETECTABLE AT A MINIMUM DEPTH OF 18" USING A SOIL PROBE.

K. UPON JOB COMPLETION, CONTRACTOR SHALL REMOVE ALL ITEMS INSTALLED TO PROTECT TREES DURING THE CONSTRUCTION PROCESS.

L. ANY OF THE FOLLOWING SOUTHERN CALIFORNIA NATIVE TREE SPECIES FALL UNDER ORDINANCE NO.177404 OF THE LOS ANGELES MUNICIPAL CODE:

1. OAKS, INCLUDING VALLEY OAK (QUERCUS LOBATA), CALIFORNIA LIVE OAK (QUERCUS AGRIFOLIA), OR ANY OTHER TREE OF THE OAK GENUS INDIGENOUS TO CALIFORNIA BUT EXCLUDING SCRUB OAK (QUERCUS DUMOSA);
2. SOUTHERN CALIFORNIA BLACK WALNUT (JUGLANS CALIFORNICA VAR. CALIFORNICA);
3. WESTERN SYCAMORE (PLATANUS RACEMOSA);
4. CALIFORNIA BAY (UMBELLULARIA CALIFORNICA).

CONTRACTOR SHALL COMPLY WITH THE REQUIREMENTS OF THE ORDINANCE FOUND AT: HTTP://CITYPLANNING.LACITY.ORG/CODE_STUDIES/OTHER/PROTECTEDTREEORD.PDF.

II. CONSEQUENCES OF VIOLATING THE TREE PROTECTION SPECIFICATIONS:

A. ANY FAILURE BY THE CONTRACTOR TO ADHERE TO THE REQUIREMENTS SPECIFIED WITHIN THESE SPECIFICATIONS WILL RESULT IN THE SUSPENSION OF ALL CONSTRUCTION ACTIVITIES, TO BE DONE AT THE CONTRACTOR'S EXPENSE. THE CONTRACTOR SHALL BE RESPONSIBLE FOR PAYMENT FOR OR REPLACEMENT OF ANY TREES DAMAGED THROUGH NON-COMPLIANCE WITH THESE SPECIFICATIONS.THE CHOICE OF WHETHER THE DAMAGED TREES ARE REPLACED OR PAID FOR WILL BE DETERMINED BY RAP FORESTRY.

1. MONETARY VALUATIONS FOR DAMAGED TREES WILL BE DETERMINED BY RAP FORESTRY.
2. HOW RAP DETERMINES THE QUANTITY, SPECIES, AND LOCATION OF REPLACEMENT TREES:
   A) MEASURING THE DIAMETER OF THE TREE(S) BEING REPLACED:
      1) FOR SINGLE TRUNK TREES, THE DIAMETER (DBH) IS MEASURED 4.5' ABOVE THE GROUND.
      2) FOR MULTI-TRUNK TREES, THE DBH OF EACH OF THE MULTIPLE TRUNKS IS MEASURED 4.5' ABOVE THE GROUND, THEN ALL ARE SUMMED TO ARRIVE AT A SINGLE DIAMETER VALUE.

B.THE RATIO OF THE SUM OF CALIPERS (AS DEFINED BY RAP NURSERY SPECIFICATIONS) OF NEW TREES PLANTED VS. THE SUM OF THE DIAMETERS OF EXISTING TREES REMOVED SHALL BE AT LEAST 1:1. THE SPECIFIC NUMBER OF REPLACEMENT TREES WILL BE DETERMINED BY RAP FORESTRY STAFF AND THE PROJECT LANDSCAPE ARCHITECT.

C. IF THE REPLACEMENT RATIO CANNOT BE ACHIEVED WITHIN THE PROJECT BOUNDARIES,THEN ONE OF THE FOLLOWING SHALL APPLY:

1)DELIVER THE TREES TO RAP FORESTRY.
2)DELIVER THE TREES TO THE NEAREST RAP SERVICE YARD.
3)PLANT THE TREES BEYOND THE PROJECT ON AN APPROVED, AREA-WIDE BASIS.

D. RAP FORESTRY STAFF AND THE PROJECT LANDSCAPE ARCHITECT SHALL DETERMINE THE REPLACEMENT TREE SPECIES/PLANTING LOCATION AND SHALL ALSO ENSURE THE HEALTH/QUALITY OF THE TREES.

TREE DISPOSITION SCHEDULE

PARK TREES

Species	Site ID	Height	Diameter	Trunks
Washingtonia filifera (California fan palm)	235	51 - 75 ft.	31	1
Vacant Site-Large (RAP) (Vacant Site-Large (RAP))	237	N/A	0	0
Brahea edulis (Guadalupe palm)	238	21 - 30 ft.	9	1
Brahea edulis (Guadalupe palm)	239	21 - 30 ft.	13	1
Eucalyptus globulus (blue gum)	895	76+	45	1
Vacant Site-Medium (RAP) (Vacant Site-Medium (RAP))	38986	N/A	0	0
Jacaranda mimosifolia (jacaranda)	38988	31 - 40 ft.	11	1
Jacaranda mimosifolia (jacaranda)	38989	31 - 40 ft.	12	1
Washingtonia robusta (Mexican fan palm)	38991	76+	10	1
Liquidambar styraciflua (sweetgum)	38992	31 - 40 ft.	17	1
Obsolete site (Obsolete site)	38993	N/A	20	1
Liquidambar styraciflua (sweetgum)	38994	31 - 40 ft.	14	1
Tipuana tipu (tipu)	38995	41 - 50 ft.	16	1
Tipuana tipu (tipu)	38996	31 - 40 ft.	15	1
Stump (Stump)	39641	N/A	41	1
Afrocarpus falcatus (African fern pine)	39663	41 - 50 ft.	25	1
Stenocarpus sinuatus (firewheel tree)	39664	11 - 20 ft.	4	1
Phoenix canariensis (Canary Island date palm)	39665	51 - 75 ft.	28	1
Washingtonia filifera (California fan palm)	43281	51 - 75 ft.	32	1
Vacant Site-Medium (RAP) (Vacant Site-Medium (RAP))	43282	N/A	0	0
Vacant Site-Medium (RAP) (Vacant Site-Medium (RAP))	43283	N/A	0	0
Ceiba speciosa (floss silk tree; kapok)	43284	21 - 30 ft.	12	1
Washingtonia filifera (California fan palm)	636511	51 - 75 ft.	31	1
Ceiba speciosa (floss silk tree; kapok)	636512	21 - 30 ft.	15	1
Quercus rubra (northern red oak)	2444174	01 - 10 ft.	1	1
Handroanthus heptaphyllus (pink trumpet tree)	2454264	01 - 10 ft.	1	1
Quercus rubra (northern red oak)	2458827	01 - 10 ft.	1	1
Handroanthus heptaphyllus (pink trumpet tree)	2460353	01 - 10 ft.	1	1
Handroanthus heptaphyllus (pink trumpet tree)	2461618	01 - 10 ft.	1	1
Handroanthus heptaphyllus (pink trumpet tree)	2463105	01 - 10 ft.	1	1
Handroanthus heptaphyllus (pink trumpet tree)	2464216	01 - 10 ft.	1	1
Corymbia ficifolia (red flowering gum)	2466283	01 - 10 ft.	1	1
Unknown spp. (unknown species)	2466284	01 - 10 ft.	1	1
Acacia stenophylla (shoestring acacia)	2466285	01 - 10 ft.	1	1
Acacia stenophylla (shoestring acacia)	2466286	01 - 10 ft.	1	1
Acacia stenophylla (shoestring acacia)	2466287	01 - 10 ft.	1	1
Acacia stenophylla (shoestring acacia)	2466288	01 - 10 ft.	1	1
Lophostemon confertus (Brisbane box)	2466289	01 - 10 ft.	1	1
Lophostemon confertus (Brisbane box)	2466290	01 - 10 ft.	1	1
Lophostemon confertus (Brisbane box)	2466291	01 - 10 ft.	1	1
Lophostemon confertus (Brisbane box)	2466292	01 - 10 ft.	1	1
Lophostemon confertus (Brisbane box)	2466294	01 - 10 ft.	1	1
Handroanthus heptaphyllus (pink trumpet tree)	2466295	01 - 10 ft.	1	1
Handroanthus heptaphyllus (pink trumpet tree)	2466296	01 - 10 ft.	1	1
Handroanthus heptaphyllus (pink trumpet tree)	2466297	01 - 10 ft.	1	1
Handroanthus heptaphyllus (pink trumpet tree)	2466298	01 - 10 ft.	1	1
Parkinsonia x 'Desert Museum' (Desert Museum palo verde)	2466302	01 - 10 ft.	1	1
Parkinsonia x 'Desert Museum' (Desert Museum palo verde)	2466303	01 - 10 ft.	1	1
Parkinsonia x 'Desert Museum' (Desert Museum palo verde)	2466305	01 - 10 ft.	1	1
Phoenix canariensis (Canary Island date palm)	36319	51 - 75 ft.	28	1
Phoenix canariensis (Canary Island date palm)	36320	51 - 75 ft.	34	1
Tipuana tipu (tipu)	36321	21 - 30 ft.	10	1
Tipuana tipu (tipu)	36323	21 - 30 ft.	10	1
Tipuana tipu (tipu)	636513	31 - 40 ft.	13	1

STREET TREES

Species	StreetsLA Site ID	Diameter
Crape Myrtle	1816284	4
Crape Myrtle	1816280	6
Crape Myrtle	1816278	5
Crape Myrtle	1816263	6
Crape Myrtle	1816255	5
Crape Myrtle	1816246	4
Crape Myrtle	1816237	4
Crape Myrtle	1816201	4
Crape Myrtle	1779363	1
Indian Laurel Fig	1809374	14
Indian Laurel Fig	1809380	14
Chitalpa	1809440	10

NOTE: STREET TREE PROTECTION GUIDELINES ARE TO BE VERIFIED BY THE BUREAU OF STREET SERVICES (STREETSLA) URBAN FORESTRY DIVISION.

FOR LADBS APPROVAL

carollo

ENGINEERING
CITY OF LOS ANGELES
Environmental Engineering Design

THIS PLAN WAS ELECTRONICALLY SIGNED AND STAMPED

LICENSED LANDSCAPE ARCHITECT JAY DYER 5623 11-30-26 1-22-26 STATE OF CALIFORNIA

BUREAU OF ENGINEERING
VERTICAL CONTROL:
HORIZONTAL CONTROL:
SHEET TITLE: TREE DISPOSITION NOTES & SCHEDULE
PROJECT: MACARTHUR LAKE STORMWATER CAPTURE PROJECT
ADDRESS: MACARTHUR PARK 2230 6TH ST LOS ANGELES CA 90057

DEPARTMENT OF PUBLIC WORKS
CITY OF LOS ANGELES

NO.	REVISIONS	DATE	BY:

CIP NO. 1920R004
INDEX NO. D-XXXXX

DESIGN GROUP
ENGINEER:
ARCHITECT: KUSH PAREKH
DESIGNED BY: KUSH PAREKH
DRAWN BY: IAN MILLER, AILSA THAI
CHECKED BY:
APPROVED BY:
DATE

WORK ORDER S33WMLRP, S043MSWC, S343MSWC

SHEET NAME
LS100
SHEET 29 OF 108 SHEETS

THE CITY OF LOS ANGELES OR ITS OFFICERS OR AGENTS SHALL NOT BE RESPONSIBLE FOR THE ACCURACY OR COMPLETENESS OF ELECTRONIC COPIES OF THIS PLAN SHEET.

REVISION DATES (DESIGN STAGE ONLY)

SHEET VERSION 4.0.1 FILE PATH: P:\MPR 2021 MACARTHUR PARK REHABILITATION\CAD\PROJECTWISE FILES\10 SHEETS\20213700LS100.DWG PLOT DATE: 1/21/2026 12:05 PM SAVED: 12/19/2025 11:36 AM SAVED BY:AILSA

FINAL DESIGN SUBMITTAL



TREE PROTECTION

SYMBOL	ITEM/DESCRIPTION
#XXX	EXISTING TREE TO REMAIN
#XXXX	EXISTING PALM TO REMAIN
RL	EXISTING TREE TO BE RELOCATED
X #XXX	EXISTING TREE TO BE REMOVED
X	EXISTING PALM TO BE REMOVED
D-101	TREE PROTECTION FENCING, SEE DETAIL 1/LS100
	TREE PROTECTION ZONE
D-102	AREA OF TURF REMOVAL

NOTES:

1. REFER TO TREE DISPOSITION SCHEDULE ON LS200 FOR DIAMETER OF TRUNKS OF ALL IMPACTED TREES.

2. TREE PROTECTION ZONE DIMENSIONS ARE TO BE TAKEN FROM FACE OF TREE TRUNK.

3. ALL TPZ BOUNDARIES ARE TO BE CONFIRMED BY A RAP REPRESENTATIVE IN FIELD PRIOR TO STARTING ANY CONSTRUCTION ACTIVITIES.

4. STREET TREE PROTECTION GUIDELINES ARE TO BE VERIFIED BY THE BUREAU OF STREET SERVICES (STREETSLA) URBAN FORESTRY DIVISION.

FOR LADBS APPROVAL

carollo

ENGINEERING
CITY OF LOS ANGELES
Environmental Engineering Division

• THIS PLAN WAS ELECTRONICALLY SIGNED AND STAMPED

LICENSED LANDSCAPE ARCHITECT
JAY DYER
5623
11-30-26
STATE OF CALIFORNIA

BUREAU OF ENGINEERING

VERTICAL CONTROL:
HORIZONTAL CONTROL:

SHEET TITLE: LANDSCAPE DEMOLITION & TREE PROTECTION PLAN, SHEET 1

PROJECT: MACARTHUR LAKE STORMWATER CAPTURE PROJECT

ADDRESS: MACARTHUR PARK
2230 6TH ST LOS ANGELES CA 90057

DEPARTMENT OF PUBLIC WORKS

NO.	REVISIONS	DATE	BY

CIP NO. 1920R004

INDEX NO. D-XXXXX

CITY OF LOS ANGELES

DESIGN GROUP

ENGINEER:
ARCHITECT: KUSH PAREKH
DESIGNED BY: KUSH PAREKH
DRAWN BY: IAN MILLER, AILSA THAI
CHECKED BY:
APPROVED BY:

WORK ORDER
S33WMLRP, S043MSWC, S343MSWC

SHEET NAME
LS101
SHEET 30 OF 108 SHEETS

REVISION DATES (DESIGN STAGE ONLY)

THE CITY OF LOS ANGELES OR ITS OFFICERS OR AGENTS SHALL NOT BE RESPONSIBLE FOR THE ACCURACY OR COMPLETENESS OF ELECTRONIC COPIES OF THIS PLAN SHEET.

FINAL DESIGN SUBMITTAL



TREE PROTECTION

SYMBOL	ITEM/DESCRIPTION
#XXX	EXISTING TREE TO REMAIN
#XXX	EXISTING PALM TO REMAIN
RL	EXISTING TREE TO BE RELOCATED
X #XXX	EXISTING TREE TO BE REMOVED
X	EXISTING PALM TO BE REMOVED
D-101	TREE PROTECTION FENCING, SEE DETAIL 1/LS100
	TREE PROTECTION ZONE
D-102	AREA OF TURF REMOVAL

NOTES:

1. REFER TO TREE DISPOSITION SCHEDULE ON LS200 FOR DIAMETER OF TRUNKS OF ALL IMPACTED TREES.

2. TREE PROTECTION ZONE DIMENSIONS ARE TO BE TAKEN FROM FACE OF TREE TRUNK.

3. ALL TPZ BOUNDARIES ARE TO BE CONFIRMED BY A RAP REPRESENTATIVE IN FIELD PRIOR TO STARTING ANY CONSTRUCTION ACTIVITIES.

4. STREET TREE PROTECTION GUIDELINES ARE TO BE VERIFIED BY THE BUREAU OF STREET SERVICES (STREETSLA) URBAN FORESTRY DIVISION.

FOR LADBS APPROVAL

carollo

ENGINEERING
CITY OF LOS ANGELES
Environmental Engineering Design

LICENSED LANDSCAPE ARCHITECT
JAY DYER
5623
11-30-26
11-22-26
STATE OF CALIFORNIA

• THIS PLAN WAS ELECTRONICALLY SIGNED AND STAMPED

BUREAU OF ENGINEERING
VERTICAL CONTROL:
HORIZONTAL CONTROL:
SHEET TITLE: LANDSCAPE DEMOLITION & TREE PROTECTION PLAN, SHEET 2
PROJECT: MACARTHUR LAKE STORMWATER CAPTURE PROJECT
ADDRESS: MACARTHUR PARK 2230 6TH ST LOS ANGELES CA 90057

DEPARTMENT OF PUBLIC WORKS
CITY OF LOS ANGELES

NO.	REVISIONS	DATE	BY

CIP NO. 1920R004
INDEX NO. D-XXXXX

DESIGN GROUP
ENGINEER:
ARCHITECT: KUSH PAREKH
DESIGNED BY: KUSH PAREKH
DRAWN BY: IAN MILLER, AILSA THAI
CHECKED BY:
APPROVED BY:

WORK ORDER
S33WMLRP, S043MSWC, S343MSWC

SHEET NAME
LS102
SHEET 31 OF 108 SHEETS

REVISION DATES (DESIGN STAGE ONLY)

THE CITY OF LOS ANGELES OR ITS OFFICERS OR AGENTS SHALL NOT BE RESPONSIBLE FOR THE ACCURACY OR COMPLETENESS OF ELECTRONIC COPIES OF THIS PLAN SHEET.

FINAL DESIGN SUBMITTAL

CONSTRUCTION NOTES
(FOR LANDSCAPE ARCHITECTURE PURPOSE ONLY, PERTAINS TO WORK DESCRIBED IN SHEETS LG001-LP810)

1. CONTRACTOR TO COORDINATE AND SCHEDULE WORK OF ALL TRADES SO AS TO NOT DELAY AT ANY PHASE OF COMPLETION, CONSTRUCTION DUE TO INTERCONNECTING WORK, OR LATE SCHEDULING. IT IS THE RESPONSIBILITY OF THE GENERAL CONTRACTOR TO ENSURE THAT ALL SUB-TRADES ARE FAMILIAR WITH THE COMPLETE CONSTRUCTION DOCUMENTS PACKAGE INCLUDING WORK THAT MAY OR MAY NOT BE PART OF THEIR SCOPE.
2. WORK SHALL BE PERFORMED WITH THE BEST ACCEPTED PRACTICES OF THE RESPECTED TRADES. ALL MATERIALS TO BE NEW (UNLESS OTHERWISE NOTED ON DRAWINGS), FIRST CLASS IN EVERY RESPECT, AND SHALL CONFORM TO CONTRACT DOCUMENTS.
3. DIMENSIONS ARE SUBJECT TO CONVENTIONAL INDUSTRY TOLERANCES EXCEPT WHERE THE REQUIREMENT IS STATED AS A RANGE WITH SPECIFIC MINIMUM AND MAXIMUM END POINTS.
4. NOTIFY DIG-ALERT (800.422.4133) TO OBTAIN AN UNDERGROUND SERVICE ID AT LEAST TWO (2) DAYS PRIOR BEFORE PROCEEDING WITH ANY EXCAVATION. LOCATIONS OF ALL SERVICE UTILITY RUNS, SUCH AS WATER SUPPLY, GAS, FIBER, ELECTRICAL (OVERHEAD AND UNDERGROUND), TELEPHONE, STORM, AND SANITARY SEWER, ETC. SHOULD BE ASCERTAINED BEFORE WORK COMMENCES. WHERE SERVICES MAY BE AFFECTED BY EXCAVATION, OR WHERE MACHINES MAY BE WORKING NEARBY, THEY SHOULD BE CAREFULLY SEALED, PROTECTED, OR DIVERTED. NOTIFY PROJECT ENGINEER OF ANY CONFLICT WITH PROPOSED IMPROVEMENTS.
5. COORDINATE ALL UTILITY RUNS AND INSTALLATIONS (EXISTING AND NEW) PRIOR TO PAVING INSTALLATION. VERIFY ALL SLEEVES AND ELECTRIC SOURCES FOR IRRIGATION CONTROL AND LIGHTING.
6. CLEAN OUT AND ADJUST EXISTING DRAIN INLETS TO ACCOMMODATE PROPOSED SURFACE DRAINAGE. ADJUST LATERAL DRAIN LINES AS NECESSARY TO BEST LINK EXISTING MAIN LINES.
7. OBTAIN INSPECTION AND APPROVAL OF FORM WORK AND REINFORCING BY BCA INSPECTOR PRIOR TO PLACING CONCRETE.
8. TRANSITIONS FROM EXISTING PAVING TO NEW PAVING OR BETWEEN DIFFERENT PAVING TYPES SHALL BE FLUSH, UNLESS OTHERWISE NOTED.
9. GRADIENTS SHALL POSITIVELY SLOPE AWAY FROM FOUNDATION(S) TOWARDS DRAIN INLETS AND DRAINAGE SWALES AT A MINIMUM RATE OF 1/8" PER FOOT. INSTALL CONCRETE FORM WORK WITH LONG, EVEN GRADIENTS TO ELIMINATE DIPS, RIDGES, ABRUPT CHANGES OF GRADE, AND SHARP TRANSITIONS.
10. INSTALL EXPANSION JOINTS (E.J.) AT ALL VERTICAL ELEMENTS. INSTALL CONSTRUCTION CONTROL JOINTS (CCJ) AT MAX. 12'-0". ZIP JOINTS WILL NOT BE ALLOWED. INSTALL E.J.'S AND CCJ'S AT 90° TO THE EDGE OF CONCRETE PAVING. SEE PLANS FOR ADDITIONAL INFORMATION AND LOCATIONS.
11. PRIOR TO PLACING CONCRETE, SUFFICIENTLY MOISTEN THE SUBGRADE AND PROVIDE SUBGRADE PREPARATIONS PER SPECIFICATIONS.
12. INSTALL CONCRETE IMPROVEMENTS THAT OBTAIN A MINIMUM COMPRESSIVE STRENGTH NOTED IN SPECIFICATIONS. CONCRETE TYPE IS ALSO INDICATED IN SPECIFICATIONS; SUBMIT CONCRETE DESIGN MIXES AND REFEREE FINISH SAMPLES TO PROJECT ENGINEER. PREPARE FIELD MOCKUPS AND OBTAIN THEIR APPROVAL PRIOR TO INSTALLATION OF CONCRETE. INSTALL CONCRETE FLAT WORK PER SPECIFICATIONS. IN CASE OF CONFLICT BETWEEN SPECIFICATIONS AND DETAILS, THE MOST STRINGENT REQUIREMENTS WILL APPLY.
13. WATERPROOF, BACKFILL AND COMPACT BEHIND ALL WALLS AND MASONRY STRUCTURES AS REQUIRED ON DRAWINGS. BACKFILL PLANTERS WITH IMPORTED AMENDED SOIL MIXTURE PER SPECIFICATIONS.
14. OWNER SHALL EMPLOY AND PAY FOR SERVICES OF AN INDEPENDENT TESTING LABORATORY TO PERFORM SPECIFIED INSPECTION AND TESTING. IN THE EVENT A TEST AND/OR INSPECTION INDICATES FAILURE OF A MATERIAL OR PROCEDURE TO MEET REQUIREMENTS OF THE CONTRACT DOCUMENTS, COSTS FOR RE-TESTING AND/OR RE-INSPECTION WILL BE PAID BY THE OWNER AND BACK-CHARGED TO THE CONTRACTOR.
15. ADDITIONAL TESTS AND/OR INSPECTIONS NOT HEREIN SPECIFIED BUT REQUESTED BY THE CITY WILL BE PAID BY THE CITY, UNLESS RESULTS OF SUCH TESTS AND/OR INSPECTIONS ARE FOUND TO BE NOT IN COMPLIANCE WITH CONTRACT DOCUMENTS. IN SUCH CASE, OWNER SHALL PAY FOR ALL COSTS FOR INITIAL TESTING AND/OR INSPECTIONS, AND RE-TESTING AND/OR RE-INSPECTIONS, AND BACK-CHARGED TO THE CONTRACTOR.

PAVING

SYMBOL	ITEM/DESCRIPTION	MATERIAL	COLOR	FINISH	MANUFACTURER /SUPPLIER	DIMENSIONS	DETAIL	REMARKS
P-101	PEDESTRIAN CONCRETE PAVING	C.I.P. CONCRETE	INTEGRAL COLOR - SANDSTONE	TOPCAST 05	-	-	1/LS601	-

EDGING

SYMBOL	ITEM/DESCRIPTION	MATERIAL	COLOR	FINISH	MANUFACTURER /SUPPLIER	DIMENSIONS	DETAIL	REMARKS
E-101	C.I.P. CONCRETE MOW STRIP	C.I.P. CONCRETE	NATURAL GRAY	BROOM FINISH	-	-	3/LS602	-

WALL

SYMBOL	ITEM/DESCRIPTION	MATERIAL	COLOR	FINISH	MANUFACTURER /SUPPLIER	DIMENSIONS	DETAIL	REMARKS
W-101	WEIR WALL	C.I.P. CONCRETE	INTEGRAL COLOR - DARK GRAY	TOPCAST 150	-	-	SEE STRUCTURAL DETAILS	-
W-102	WATER FEATURE CONCRETE CURB WALL	C.I.P. CONCRETE	NATURAL GRAY	BROOM FINISH	-	-	2/LS602	-

ROCK SCHEDULE

SYMBOL	ITEM/DESCRIPTION	MATERIAL	COLOR	FINISH	MANUFACTURER /SUPPLIER	DIMENSIONS	DETAIL	REMARKS
K-101	BOULDERS	STEELHEAD	NATURAL	CLEFT	SOUTHWEST BOULDER & STONE	25% 2'W x 2'L x 12"-24"H 25% 2'W x 3'L x 12"-24"H 25% 2'W x 4'L x 12"-24"H 25% 3'W x 4'L x 12"-24"H	2/LS601	BENCH TOP BOULDERS WITH RELATIVELY FLAT TOPS
K-102	COBBLE	CRESTA RUBBLE	NATURAL	-	SOUTHWEST BOULDER & STONE	6" - 9"	3/LS601	CRUSHED/ANGULAR

RAILING

SYMBOL	ITEM/DESCRIPTION	MATERIAL	COLOR	FINISH	MANUFACTURER /SUPPLIER	DIMENSIONS	DETAIL	REMARKS
R-101	BRIDGE GUARDRAIL	METAL	GRAY	POWDERCOAT	-	-	1/LS602	CUSTOM GUARDRAIL DESIGN OVER PREFAB BRIDGE

FOR LADBS APPROVAL

carollo

ENGINEERING
CITY OF LOS ANGELES
Environmental Engineering Design

• THIS PLAN WAS ELECTRONICALLY SIGNED AND STAMPED •

LICENSED LANDSCAPE ARCHITECT — JAY DYER — 5623 — VENTURA — STATE OF CALIFORNIA — 11-30-26 — 1-22-26

BUREAU OF ENGINEERING
VERTICAL CONTROL:
HORIZONTAL CONTROL:
SHEET TITLE: CONSTRUCTION NOTES & SCHEDULE
PROJECT: MACARTHUR LAKE STORMWATER CAPTURE PROJECT
ADDRESS: MACARTHUR PARK 2230 6TH ST LOS ANGELES CA 90057

DEPARTMENT OF PUBLIC WORKS
NO. | REVISIONS | DATE | BY

CIP NO. 1920R004

INDEX NO. D-XXXXX

CITY OF LOS ANGELES
DESIGN GROUP | DATE
ENGINEER:
ARCHITECT: KUSH PAREKH
DESIGNED BY: KUSH PAREKH
DRAWN BY: IAN MILLER, AILSA THAI
CHECKED BY:
APPROVED BY:

WORK ORDER S33WMLRP, S043MSWC, S343MSWC

SHEET NAME
LS200
SHEET 32 OF 108 SHEETS

THE CITY OF LOS ANGELES OR ITS OFFICERS OR AGENTS SHALL NOT BE RESPONSIBLE FOR THE ACCURACY OR COMPLETENESS OF ELECTRONIC COPIES OF THIS PLAN SHEET.

REVISION DATES (DESIGN STAGE ONLY)

SHEET VERSION 4.0.1 FILE PATH: P:\MPR 2021 MACARTHUR PARK REHABILITATION\CAD\PROJECTWISE FILES\10 SHEETS\20213700LS200.DWG PLOT DATE: 1/21/2026 12:05 PM SAVED: 12/19/2025 11:41 AM SAVED BY:AILSA

FINAL DESIGN SUBMITTAL

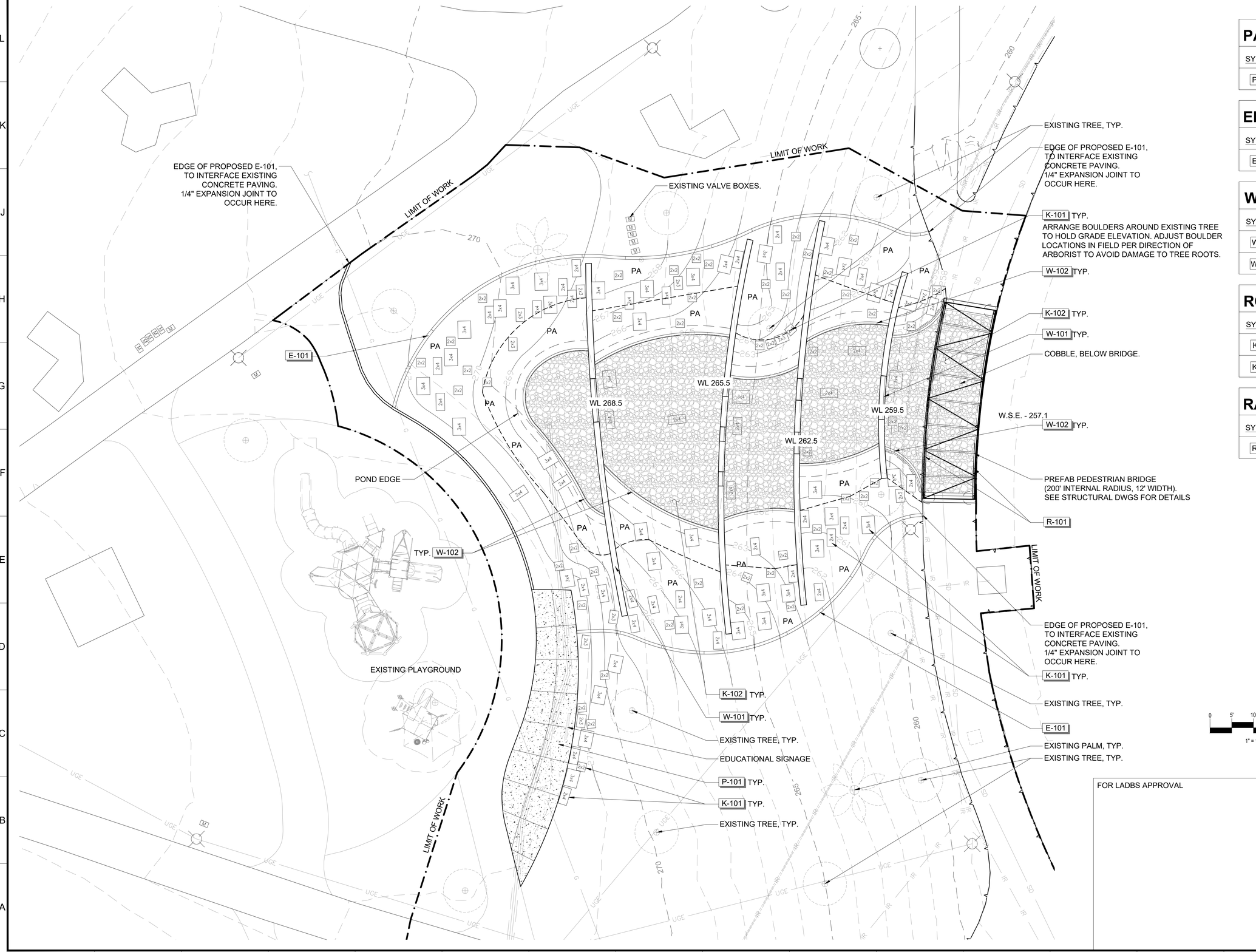

PAVING

SYMBOL	ITEM/DESCRIPTION
P-101	PEDESTRIAN CONCRETE PAVING

EDGING

SYMBOL	ITEM/DESCRIPTION
E-101	C.I.P. CONCRETE MOW STRIP

WALL

SYMBOL	ITEM/DESCRIPTION
W-101	WEIR WALL
W-102	WATER FEATURE CONCRETE CURB

ROCK

SYMBOL	ITEM/DESCRIPTION
K-101	BOULDERS
K-102	COBBLE

RAILING

SYMBOL	ITEM/DESCRIPTION
R-101	BRIDGE GUARDRAIL

FOR LADBS APPROVAL

ENGINEERING
CITY OF LOS ANGELES
Environmental Engineering Design

• THIS PLAN WAS ELECTRONICALLY SIGNED AND STAMPED •

LICENSED LANDSCAPE ARCHITECT
JAY DYER
5623
11-30-26
1-22-26
STATE OF CALIFORNIA

BUREAU OF ENGINEERING
VERTICAL CONTROL:
HORIZONTAL CONTROL:
SHEET TITLE: LANDSCAPE CONSTRUCTION PLAN
PROJECT: MACARTHUR LAKE STORMWATER CAPTURE PROJECT
ADDRESS: MACARTHUR PARK 2230 6TH ST LOS ANGELES CA 90057

DEPARTMENT OF PUBLIC WORKS
CITY OF LOS ANGELES

NO	REVISIONS	DATE	BY

CIP NO. 1920R004
INDEX NO. D-XXXXX

DESIGN GROUP
ENGINEER:
ARCHITECT: KUSH PAREKH
DESIGNED BY: KUSH PAREKH
DRAWN BY: IAN MILLER, AILSA THAI
CHECKED BY:
APPROVED BY:

WORK ORDER
S33WMLRP, S043MSWC, S343MSWC

SHEET NAME
LS201
SHEET 33 OF 108 SHEETS

carollo

THE CITY OF LOS ANGELES OR ITS OFFICERS OR AGENTS SHALL NOT BE RESPONSIBLE FOR THE ACCURACY OR COMPLETENESS OF ELECTRONIC COPIES OF THIS PLAN SHEET.

REVISION DATES (DESIGN STAGE ONLY)

SHEET VERSION 4.0.1 FILE PATH: P:\MPR 2021 MACARTHUR PARK REHABILITATION\CAD\PROJECTWISE FILES\10 SHEETS\20213700LS201.DWG PLOT DATE: 1/21/2026 12:05 PM SAVED: 12/19/2025 11:44 AM SAVED BY:AILSA

FINAL DESIGN SUBMITTAL

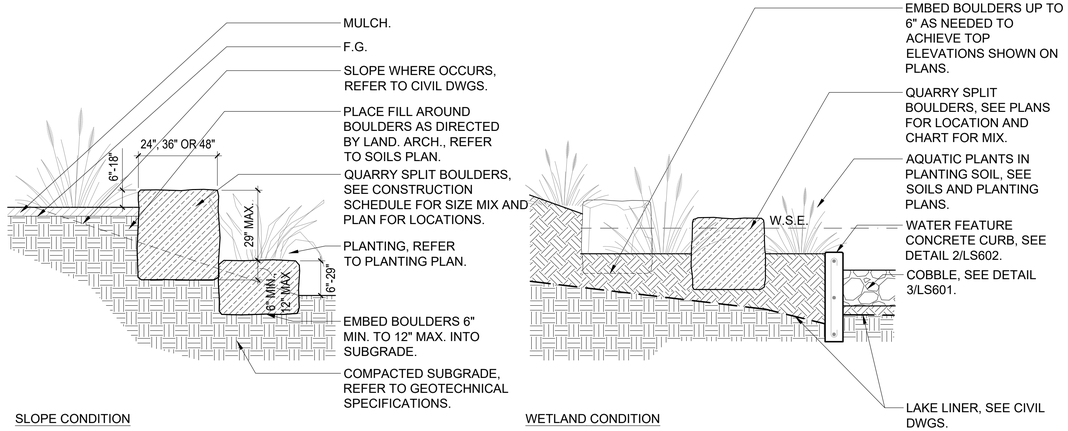

2 LS601 BOULDERS [K-101]
SCALE: 1/2" = 1'-0"
P-MPR2021-323253-23

NOTES:
1. REFER TO PLANS FOR CONCRETE PAVING PATTERN AND JOINT LOCATIONS. THESE LOCATIONS ARE SHOWN FOR DESIGN INTENT ONLY
2. CONTRACTOR TO PROVIDE SHOP DWGS FOR LANDSCAPE ARCHITECT'S REVIEW/APPROVAL PRIOR TO INSTALLATION OF CONCRETE PAVING.
3. REFER TO CIVIL ENGINEERING DRAWINGS FOR ALL CONCRETE PAVING APPLICATIONS FOR THICKNESS, REINFORCEMENT, AND CALCULATIONS.

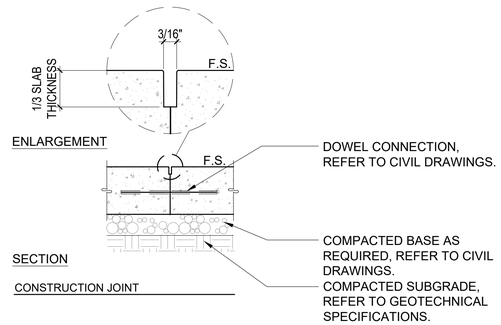

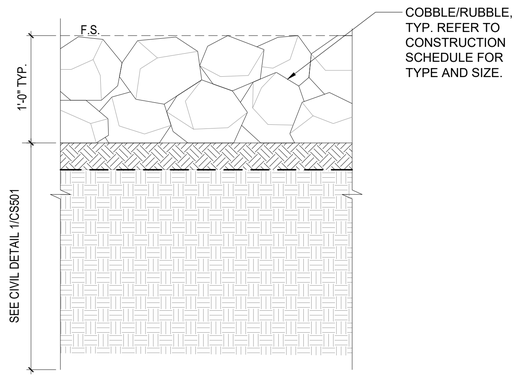

3 LS601 COBBLE [K-102]
SCALE: N.T.S.
P-MPR2021-321543-05

1 LS601 CONCRETE CONTROL JOINTS
SCALE: 1" = 1'-0"
P-MPR2021-033163-04

FOR LADBS APPROVAL

carollo

ENGINEERING
CITY OF LOS ANGELES
Environmental Engineering Division

THIS PLAN WAS ELECTRONICALLY SIGNED AND STAMPED

LICENSED LANDSCAPE ARCHITECT
JAN DYER
5623
11-30-26
1-22-26
STATE OF CALIFORNIA

BUREAU OF ENGINEERING
VERTICAL CONTROL:
HORIZONTAL CONTROL:
SHEET TITLE: LANDSCAPE CONSTRUCTION DETAILS, SHEET 1
PROJECT: MACARTHUR LAKE STORMWATER CAPTURE PROJECT
ADDRESS: MACARTHUR PARK 2230 6TH ST LOS ANGELES CA 90057

DEPARTMENT OF PUBLIC WORKS
NO. | REVISIONS | DATE | BY
CIP NO. 1920R004
INDEX NO. D-XXXXX

CITY OF LOS ANGELES
DESIGN GROUP | DATE
ENGINEER:
ARCHITECT: KUSH PAREKH
DESIGNED BY: KUSH PAREKH
DRAWN BY: IAN MILLER, AILSA THAI
CHECKED BY:
APPROVED BY:

WORK ORDER S33WMLRP, S043MSWC, S343MSWC

SHEET NAME
LS601
SHEET 34 OF 108 SHEETS

THE CITY OF LOS ANGELES OR ITS OFFICERS OR AGENTS SHALL NOT BE RESPONSIBLE FOR THE ACCURACY OR COMPLETENESS OF ELECTRONIC COPIES OF THIS PLAN SHEET.

REVISION DATES (DESIGN STAGE ONLY)

FINAL DESIGN SUBMITTAL

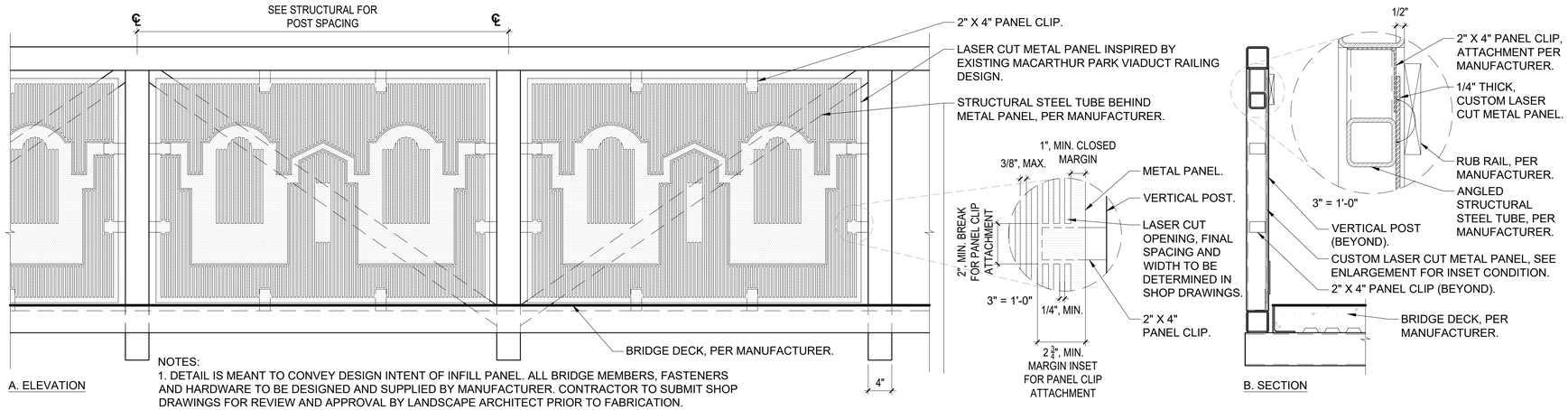

A. ELEVATION

B. SECTION

NOTES:
1. DETAIL IS MEANT TO CONVEY DESIGN INTENT OF INFILL PANEL. ALL BRIDGE MEMBERS, FASTENERS AND HARDWARE TO BE DESIGNED AND SUPPLIED BY MANUFACTURER. CONTRACTOR TO SUBMIT SHOP DRAWINGS FOR REVIEW AND APPROVAL BY LANDSCAPE ARCHITECT PRIOR TO FABRICATION.
2. FINAL THICKNESS OF METAL PANEL TO BE COORDINATED WITH BRIDGE STRUCTURAL REQUIREMENTS.

1 / LS602 BRIDGE GUARDRAIL ELEVATION [R-101]
SCALE: 1" = 1'-0"

P-MPR2021-055213-04

NOTES:
1. SCORE MOW STRIP AT 10' O.C. MAX. AND AT ALL CHANGES IN DIRECTION SIMILAR TO CONCRETE PAVING DETAIL.
2. WHEN MOW STRIP IS INSTALLED ADJACENT TO EXISTING A.C. PAVING, THE EXISTING A.C. PAVING SHALL BE SAW-CUT 12" FROM THE EDGE OF THE MOW STRIP AND NEW ASPHALT CONCRETE PLACED AFTER MOW STRIP IS IN PLACE.

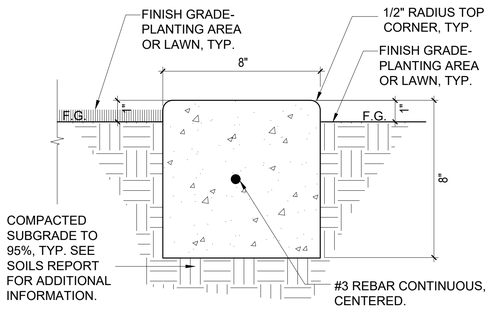

CONDITION A - TURF/PLANTING BORDER

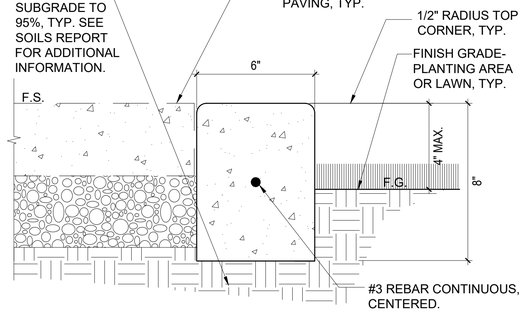

CONDITION B - TURF/PAVING BORDER

3 / NTS C.I.P. CONCRETE MOW STRIP AND HEADER
NTS | BOE VERSION Feb/08 - RF, SD | RP DETAIL L3200

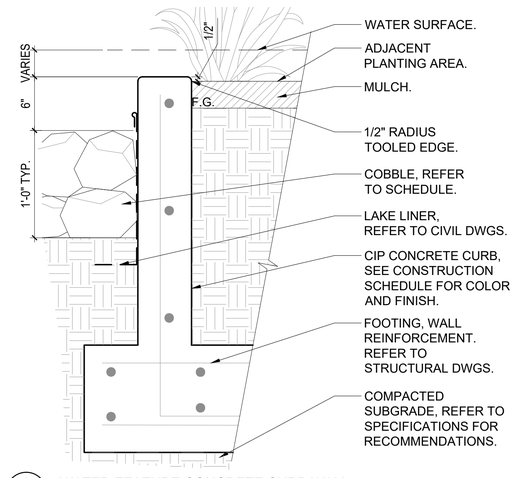

2 / LS602 WATER FEATURE CONCRETE CURB WALL
SCALE: 1-1/2" = 1'-0"

P-MPR2021-321613-23

FOR LADBS APPROVAL

carollo

ENGINEERING
CITY OF LOS ANGELES
Environmental Engineering Design

LICENSED LANDSCAPE ARCHITECT — JAY DYER — 5623 — 11-30-26 — 1-22-26 — STATE OF CALIFORNIA

• THIS PLAN WAS ELECTRONICALLY SIGNED AND STAMPED •

BUREAU OF ENGINEERING
VERTICAL CONTROL:
HORIZONTAL CONTROL:
SHEET TITLE: LANDSCAPE CONSTRUCTION DETAILS, SHEET 2
PROJECT: MACARTHUR LAKE STORMWATER CAPTURE PROJECT
ADDRESS: MACARTHUR PARK 2230 6TH ST LOS ANGELES CA 90057

DEPARTMENT OF PUBLIC WORKS
NO. | REVISIONS | DATE | BY:
CIP NO. 1920R004
INDEX NO. D-XXXXX

CITY OF LOS ANGELES
DESIGN GROUP | DATE
ENGINEER:
ARCHITECT: KUSH PAREKH
DESIGNED BY: KUSH PAREKH
DRAWN BY: IAN MILLER, AILSA THAI
CHECKED BY:
APPROVED BY:

WORK ORDER S33WMLRP, S043MSWC, S343MSWC

SHEET NAME LS602
SHEET 35 OF 108 SHEETS

THE CITY OF LOS ANGELES OR ITS OFFICERS OR AGENTS SHALL NOT BE RESPONSIBLE FOR THE ACCURACY OR COMPLETENESS OF ELECTRONIC COPIES OF THIS PLAN SHEET.

REVISION DATES (DESIGN STAGE ONLY)

SHEET VERSION 4.0.1 FILE PATH: P:\MPR 2021 MACARTHUR PARK REHABILITATION\CAD\PROJECTWISE FILES\10 SHEETS\20213700LS602.DWG PLOT DATE: 1/21/2026 12:05 PM SAVED: 12/19/2025 11:45 AM SAVED BY:AILSA

FINAL DESIGN SUBMITTAL

NOTES
1. CONTRACTOR TO PROVIDE 2 BUILDING CREDIT SIGNS FOR PROJECT.
2. SIGN LOCATIONS TO BE DETERMINED BY THE ENGINEER AND INSPECTOR.

Client Department Logo — 225 mm (9") color logos

[PROJECT TITLE]
[FUNDING SOURCE] — 75 mm (3") Bold Caps; 65 mm (2-1/2") Caps

[NAME], MAYOR — 65 mm (2-1/2") Caps

[NAME]
COUNCILMEMBER, [X] DISTRICT — 55 mm (2-1/4") Caps

[CLIENT NAME]
[TITLE–CLIENT GENERAL MANAGER] — 55 mm (2-1/4") Caps

DEPARTMENT OF PUBLIC WORKS — 55 mm (2-1/4") Caps
[NAME] Board President — 50 mm (2") Caps & LC
[NAME], P.E. City Engineer — 50 mm (2") Caps & LC
[NAME] Inspector of Public Works — 50 mm (2") Caps & LC
["BUREAU OF ENGINEERING" or CONSULTANT FIRM] Design Architect and Engineer — 50 mm (2") Caps & LC
["BUREAU OF ENGINEERING" or CONSULTANT FIRM] Construction Management — 50 mm (2") Caps & LC
For questions, please call the Project Manager at [(XXX) XXX-XXXX] — 45 mm (1-3/4") Caps & LC

BUILDING CREDIT SIGN TYPE III

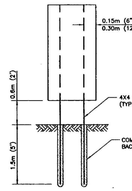

TYPICAL MOUNTING DETAILS

[PROJECT TITLE]
[FUNDING SOURCE]
[NAME], Mayor
[NAME], Councilmember – [X] District
Client Department Logo — Logo: 225mm (9") color

75 mm (3") Bold Caps; 65 mm (2-1/2") Caps; 65 mm (2-1/2") Caps & LC; 55 mm (2-1/4") Caps & LC

DEPARTMENT OF PUBLIC WORKS — 55 mm (2-1/4") Caps
[NAME], Board President — [NAME], [Title/General Manager] — 50 mm (2") Caps & LC
[NAME], P.E., City Engineer — 50 mm (2") Caps & LC
[NAME], Inspector of Public Works — 50 mm (2") Caps & LC
["BUREAU OF ENGINEERING" OR CONSULTANT FIRM], Design Architect and Engineer — 50 mm (2") Caps & LC
["BUREAU OF ENGINEERING" OR CONSULTANT FIRM], Construction Management — 50 mm (2") Caps & LC
For questions, please call the Project Manager at [(XXX) XXX-XXXX] — 45 mm (1-3/4") Caps & LC

BUILDING CREDIT SIGN TYPE IV

NOTES:
1. SIGN BOARD: 1200MM X 2400MM X 19MM (4'X8'X3/4") PLYWOOD (MEDIUM OR HIGH DENSITY OVERLAY, OR MARINE GRADE); PAINT ALL AROUND WITH ONE COAT EXTERIOR PRIMER AND TWO COATS EXTERIOR SEMI-GLOSS WHITE, UNLESS OTHERWISE NOTED, USE TYPE IV.
2. LETTERING: EXTERIOR BLACK PAINT; APPLY BY BRUSH, SILKSCREENING OR EQUIVALENT; DO NOT USE STICKERED, SELF-ADHESIVE OR GLUED LETTERING.
3. LOGOS: OBTAIN SELF-ADHESIVE DECALS FROM ENGINEER; PAINT "CLIENT DEPT. LOGO" PER NOTE 2 UNLESS DECAL IS AVAILABLE.
4. SUBMIT SCALE DRAWING OF SIGN WITH LETTERING TO ENGINEER FOR APPROVAL PRIOR TO FABRICATION.
5. CONTRACTOR OPTION: PAINT NAMES ON 1.5MM (16 GA) ALUMINUM PLACARDS PAINTED PER NOTE 1; SECURELY FASTEN PLACARDS TO SIGN BOARD WITH SCREWS.

BUREAU OF ENGINEERING | DEPARTMENT OF PUBLIC WORKS | CITY OF LOS ANGELES

BUILDING CREDIT SIGNS | STANDARD PLAN S-792-0

SUBMITTED Apr. 4, 2002 — BUREAU OF ENGINEERING DEPUTY CITY ENGINEER
APPROVED 4/8, 2002 — BOARD OF PUBLIC WORKS CITY ENGINEER
DESIGNED P. LEE | DRAWN A. HSU | CHECKED H. LEE

REVISIONS: NO. | DATE | DESCRIPTION | ENGR. OF DESIGN | CITY ENGR.
SUPERSEDES | REFERENCES
VAULT INDEX NUMBER B-4501
SHEET 1 OF 1 SHEETS

2 BOE BUILDING CREDIT SIGN
1" = 1" — P-MPR2021-324123-02

NOTES:
1. CAMERA-READY PRODUCTION GRAPHIC FILES SHALL BE PROVIDED BY THE CITY AT THE TIME OF FABRICATION.
2. EDUCATIONAL SIGNAGE MUST INCLUDE THE FOLLOWING STATEMENT: "FUNDING FOR THIS PROJECT HAS BEEN PROVIDED IN FULL OR IN PART FROM THE LOS ANGELES COUNTY FLOOD CONTROL DISTRICT'S SAFE CLEAN WATER PROGRAM."
3. FINAL SIGNAGE CONTENT AND LOGOS TO BE COORDINATED WITH LASAN OUTREACH TEAM.



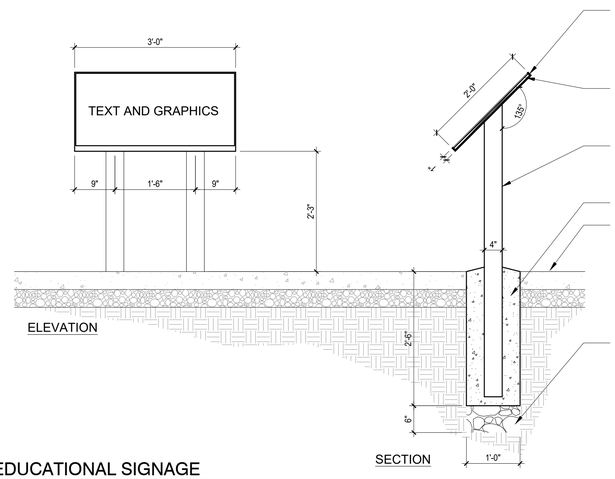

1 EDUCATIONAL SIGNAGE
3/4" = 1'-0" — P-MPR2021-324133-05

FOR LADBS APPROVAL

ENGINEERING
CITY OF LOS ANGELES
Environmental Engineering Division

LICENSED LANDSCAPE ARCHITECT — JAE DYER — 5623 — 11-30-26 — 1-22-26 — STATE OF CALIFORNIA
• THIS PLAN WAS ELECTRONICALLY SIGNED AND STAMPED •

BUREAU OF ENGINEERING
VERTICAL CONTROL:
HORIZONTAL CONTROL:
SHEET TITLE: LANDSCAPE CONSTRUCTION DETAILS, SHEET 3
PROJECT: MACARTHUR LAKE STORMWATER CAPTURE PROJECT
ADDRESS: MACARTHUR PARK 2230 6TH ST LOS ANGELES CA 90057

DEPARTMENT OF PUBLIC WORKS
NO. | REVISIONS | DATE | BY
CIP NO. 1920R004
INDEX NO. D-XXXXX

CITY OF LOS ANGELES
DESIGN GROUP
ENGINEER:
ARCHITECT: KUSH PAREKH
DESIGNED BY: KUSH PAREKH
DRAWN BY: IAN MILLER, AILSA THAI
CHECKED BY:
APPROVED BY:
DATE

WORK ORDER
S33WMLRP, S043MSWC, S343MSWC

SHEET NAME
LS603
SHEET 36 OF 108 SHEETS

carollo

THE CITY OF LOS ANGELES OR ITS OFFICERS OR AGENTS SHALL NOT BE RESPONSIBLE FOR THE ACCURACY OR COMPLETENESS OF ELECTRONIC COPIES OF THIS PLAN SHEET.
REVISION DATES (DESIGN STAGE ONLY)

SHEET VERSION 4.0.1 FILE PATH: P:\MPR 2021 MACARTHUR PARK REHABILITATION\CAD\PROJECTWISE FILES\10 SHEETS\20213700LS603.DWG PLOT DATE: 1/21/2026 12:06 PM SAVED: 12/19/2025 11:46 AM SAVED BY:AILSA

FINAL DESIGN SUBMITTAL

IRRIGATION NOTES

1. CONTRACTOR SHALL VERIFY THE LOCATIONS OF ALL EXISTING AND NEW UTILITIES, STRUCTURES, AND SERVICES PRIOR TO COMMENCING WORK. LOCATIONS OF UTILITY STRUCTURES AND SERVICES AS GRAPHICALLY ILLUSTRATED ON THESE DRAWINGS ARE APPROXIMATE ONLY. ANY DISCREPANCIES EVIDENT BETWEEN THE PLANS AND ACTUAL FIELD CONDITIONS SHALL BE REPORTED TO CONSTRUCTION MANAGER AND BCA INSPECTOR.

2. IRRIGATION SYSTEM AS SHOWN IS A REPRESENTATIONAL DIAGRAM.

3. TECHNICAL SPECIFICATIONS OF THE IRRIGATION SYSTEM (IDENTIFIED AS SECTION 328400 - IRRIGATION SYSTEM) ARE PREPARED TO SUPPLEMENT THE CONTRACT DRAWINGS. CONTRACTOR SHALL BECOME FAMILIAR WITH THE CONTENTS OF BOTH THE DRAWINGS AND SPECIFICATIONS FOR THE INSTALLATION OF THE IRRIGATION SYSTEM.

4. CONTRACTOR SHALL NOT WILLFULLY INSTALL ANY EQUIPMENT AS SHOWN IN THE DRAWINGS WHEN IT IS OBVIOUS THAT UNKNOWN CONDITIONS IN THE FIELD ARE PRESENT WHICH WERE NOT EVIDENT DURING THE TIME WHEN THE IRRIGATION DRAWINGS WERE BEING PREPARED. ANY SUCH DISCREPANCIES FOUND SHALL BE BROUGHT TO THE IMMEDIATE ATTENTION OF THE OWNER'S AUTHORIZED REPRESENTATIVE FOR CLARIFICATION AND RESOLUTION PRIOR TO ANY INSTALLATION. CONTRACTOR SHALL ASSUME ALL RESPONSIBILITY FOR FIELD CHANGES THAT ARE REQUIRED AS A RESULT AND NO ADDITIONAL COST SHALL BE INCURRED BY THE OWNER.

5. INSTALL ALL EQUIPMENT AS SHOWN IN THE DRAWINGS AND TECHNICAL SPECIFICATIONS. CONTRACTOR SHALL BE RESPONSIBLE TO COMPLY WITH APPLICABLE JURISDICTIONAL REQUIREMENTS FOR BOTH EQUIPMENT AND INSTALLATION. WHERE APPLICABLE, INSTALL EQUIPMENT ACCORDINGLY PER MANUFACTURER'S DIRECTIONS.

6. ALL PIPING LOCATED UNDER PAVED AREAS SHALL BE INSTALLED IN PIPE SLEEVING TWICE (2X) THE DIAMETER OF THE PIPE BEING CARRIED. SEE IRRIGATION SCHEDULE FOR TYPE AND SIZE. ALL SYSTEM WIRING UNDER PAVED AREAS SHALL BE INSTALLED IN PVC SCH. 40 PIPING THAT ARE SIZED ACCORDINGLY TO EASILY ACCOMMODATE THE SIZE REQUIRED TO EASILY PULL WIRES THROUGH. ALL SLEEVES TO BE INSTALLED WITH A MINIMUM COVERAGE DEPTH AS SHOWN IN THE DETAILS. SLEEVES SHALL EXTEND AT LEAST TWELVE INCHES (12") BEYOND THE EDGES OF THE PAVING BEING SLEEVED. SEAL ALL SLEEVE ENDS TO PROHIBIT SOIL FROM ENTERING THE BURIED SLEEVE.

7. GROUNDING: CONTRACTOR SHALL USE PROPER GROUNDING TECHNIQUES FOR GROUNDING THE CONTROLLER, TWO (2)-WIRE SYSTEM (AS APPLICABLE), AND ITS RELATED EQUIPMENT PER MANUFACTURER'S SPECIFICATIONS.

8. BEING DIAGRAMMATIC, MAIN LINES, LATERAL LINES, AND/OR RELATED IRRIGATION EQUIPMENT MAY BE ILLUSTRATED ON THE CONTRACT DRAWINGS WITHIN A PAVING AREA; IT IS GRAPHICALLY ILLUSTRATED FOR CLARITY PURPOSES ONLY. THE ACTUAL LOCATION OF MAIN LINES, LATERAL LINES, AND OTHER RELATED IRRIGATION COMPONENTS SHALL BE INSTALLED WITHIN PLANTING AREAS. INSTALL AT A MINIMUM OF EIGHTEEN INCHES (18") FROM ADJACENT PAVED AREAS OR OTHER OBSTACLES. CONTRACTOR SHALL CONFIRM GENERAL SYSTEM LAYOUT IN THE FIELD WITH OWNER'S AUTHORIZED REPRESENTATIVE PRIOR TO STARTING WORK.

9. TREE BUBBLERS, IF SPECIFIED, SHALL BE ALIGNED IN RELATION WITH THE TREES AS SHOWN ON THE PLANTING PLANS. CONFIRM EXACT LAYOUT IN FIELD WITH LANDSCAPE ARCHITECT PRIOR TO INSTALLATION.

10. CONTRACTOR SHALL INSTALL ADDITIONAL CHECK VALVES FOR IRRIGATION HEADS AND LATERALS, AS REQUIRED, TO PREVENT LOW-HEAD DRAINAGE.

11. CONTRACTOR SHALL PROVIDE AN ADDITIONAL TWO (2) PILOT WIRES FROM EACH CONTROLLER ALONG THE ENTIRETY OF THE MAIN LINE ROUTE TO THE LAST AUTOMATIC REMOTE-CONTROL VALVE ON EACH AND EVERY MAIN LINE SEGMENT. LABEL AS TRACER WIRES AT BOTH ENDS.

12. PRIOR TO COMMENCING CONSTRUCTION, CONTRACTOR SHALL SUBMIT SCALED SHOP DRAWINGS FOR REVIEW BY OWNER'S AUTHORIZED REPRESENTATIVE AND LANDSCAPE ARCHITECT, INDICATING THE PROPOSED LOCATIONS OF THE IRRIGATION EQUIPMENT LISTED. SHOP DRAWINGS SHALL INCLUDE:

    - POINTS OF CONNECTION (INCLUDING WATER POC, BACK FLOW PREVENTION DEVICES, MASTER CONTROL VALVES, FLOW SENSORS, ETC.).
    - SYSTEM CONTROL AND ISOLATION VALVES.
    - AUTOMATIC REMOTE-CONTROL VALVES (INDICATE STATION NUMBER).
    - QUICK COUPLING VALVES.
    - IRRIGATION CONTROLLER(S).
    - RELATED EQUIPMENT (AS SPECIFIED ON PLANS) SUCH AS CONTROL WIRES AND SPLICE BOXES.
    - ROUTING OF MAIN LINE PIPING.

13. GRAPHIC SYMBOLS FOR EACH COMPONENT SHALL REPRESENT A SCALED FOOTPRINT OF THE EQUIPMENT OR VALVE BOX ENCLOSURE IN WHICH EQUIPMENT IS INSTALLED. REVIEWED SHOP DRAWINGS ARE A CONDITION TO COMMENCE INSTALLATION OF THE IRRIGATION SYSTEM. CHANGES OR ADJUSTMENTS TO ACCEPTED SHOP DRAWINGS REQUIRE WRITTEN APPROVAL BY OWNER'S AUTHORIZED REPRESENTATIVE OR LANDSCAPE ARCHITECT PRIOR TO ACTUAL INSTALLATION. ANY INSTALLED CHANGES OR ADJUSTMENTS MADE WITHOUT FIRST RECEIVING SHOP DRAWING APPROVAL SHALL BE RELOCATED AS DIRECTED AND AT CONTRACTOR'S SOLE EXPENSE.

14. ALL IRRIGATION HEADS SHALL BE INSTALLED WITH NOZZLE, SCREEN, AND AT COVERAGE ARCS AS SHOWN IN THE DRAWINGS. ADJUST HEAD COVERAGE AS REQUIRED TO PREVENT ANY OVERSPRAY ONTO BUILDINGS, WALLS, WINDOWS, FENCES, SIGNAGE, HARDSCAPE, ETC. THIS MAY INCLUDE NECESSARY ADJUSTMENTS OF DIFFUSER PINS, ADJUSTMENT SCREWS, INCLUSION OR REPLACEMENT OF PRESSURE COMPENSATING SCREENS, REPLACEMENT OF NOZZLES WITH MORE APPROPRIATE FIXED RADIUS OR ADJUSTABLE ARC UNITS.

15. PREPARATION OF IRRIGATION SYSTEM AS-BUILT DRAWINGS BY CONTRACTOR ARE A CONDITION OF THE CONTRACT. THESE DRAWINGS DOCUMENT PROGRESS AS WORK IS PERFORMED DURING THE COURSE OF INSTALLATION. CONTRACTOR SHALL PROVIDE DAILY UPDATES TO THESE DRAWINGS BY NEATLY AND LEGIBLY NOTATING CHANGES FROM THE CONTRACT DRAWINGS CONFIRMING INSTALLATION LOCATION(S), SIZE(S), AND/OR TYPE(S) OF MATERIALS OR EQUIPMENT PER SSPWC. ANY CHANGES SHALL GRAPHICALLY MATCH THE ESTABLISHED SYMBOL NOMENCLATURE ILLUSTRATED IN THE CONTRACT DRAWINGS. AS-BUILTS SHALL BE MADE AVAILABLE AT ALL TIMES FOR REVIEW WHEN REQUESTED BY BCA INSPECTOR.

16. AS A CONDITION OF FINAL ACCEPTANCE, AN IRRIGATION AUDIT REPORT (PREPARED BY A CERTIFIED LANDSCAPE IRRIGATION AUDITOR) IS REQUIRED UPON COMPLETION OF THE IRRIGATION SYSTEM INSTALLATION. AUDITOR ENGAGEMENT IS THE RESPONSIBILITY OF THE CONTRACTOR AND ALL ASSOCIATED COSTS SHALL BE INCLUDED IN THE CONTRACT BID. AUDIT OF THE COMPLETED IRRIGATION SYSTEM SHALL BE PERFORMED IN A MANNER CONSISTENT WITH EITHER THE IRRIGATION ASSOCIATION LANDSCAPE IRRIGATION AUDITOR CERTIFICATION PROGRAM OR THE U.S. ENVIRONMENTAL PROTECTION AGENCY WATERSENSE LABELED PROFESSIONAL CERTIFICATION PROGRAM. PROOF OF AUDITOR'S CERTIFICATION SHALL BE INCLUDED WITH THE SIGNED AND DATED IRRIGATION AUDIT REPORT. THE INSTALLED IRRIGATION SYSTEM SHALL MEET NECESSARY PROGRAM REQUIREMENTS TO ACHIEVE CERTIFICATION.

EXISTING IRRIGATION NOTES:

1. CONTRACTOR SHALL FIELD-VERIFY EXISTING SITE CONDITIONS WITH ENGINEER AND BCA INSPECTOR PRIOR TO COMMENCING DEMOLITION OR OTHER WORK. NOTE LOCATIONS OF STRUCTURES, PROPERTY LINES, EASEMENTS, WORK LIMITS, SETBACKS, ETC. REVIEW AND ACCURATELY DOCUMENT EXISTING METERS, SERVICE LINES, BACKFLOW PREVENTIONS DEVICES, MAIN LINES, REMOTE CONTROL VALVES, ISOLATION AND SYSTEM CONTROL VALVES, QUICK COUPLING VALVES, CONTROLLERS, WIRING, PIPES, SLEEVE LOCATIONS, VALVES, AND OTHER IRRIGATION EQUIPMENT DESIGNATED TO BE PROTECTED IN PLACE. VERIFY DEPTH AND LOCATION OF ALL EXISTING UTILITIES; POTHOLE, AS NEEDED, TO LOCATE BURIED IRRIGATION SYSTEM EQUIPMENT. PROVIDE DIMENSIONS TO ACCURATELY REPRESENT LOCATIONS.

2. CONTRACTOR SHALL VERIFY AS-BUILTS SHOWN AS A PART OF THESE PLANS ON SHEET LI712 AS WELL AS CONTROLLER CHARTS FOR ADJACENT IRRIGATED AREAS PRIOR TO STARTING NEW IRRIGATION WORK. ALL EXISTING IRRIGATION EQUIPMENT LOCATIONS, SIZES, AND CONDITIONS SHALL BE VERIFIED IN FIELD WITH RAP IRRIGATION STAFF AT START OF WORK. PRIOR TO COMMENCING NEW IRRIGATION WORK, THE CONTRACTOR SHALL SUBMIT A LIST OF NECESSARY REPAIRS OR MODIFICATIONS TO THE EXISTING IRRIGATION SYSTEM (INCLUDING CONTROL WIRING) REQUIRED FOR COORDINATION WITH AND SUCCESSFUL OPERATION OF THE ENTIRE IRRIGATION SYSTEM FOLLOWING THE INSTALLATION OF NEW IRRIGATION SYSTEM COMPONENTS TO THE PROJECT MANAGER FOR REVIEW AND APPROVAL.

3. CONTRACTOR SHALL PREPARE AND SUBMIT SCALED SHOP DRAWINGS OF THE EXISTING IRRIGATION SYSTEM PRIOR TO COMMENCING WORK. EXISTING IRRIGATION EQUIPMENT SHALL BE CLEARLY IDENTIFIED, INCLUDING SIZES AND MODEL NUMBERS. REVIEWED AND APPROVED SHOP DRAWINGS OF THE EXISTING IRRIGATION SYSTEM IS A CONDITION FOR COMMENCING WORK ON SITE. NOTIFY THE OWNER'S AUTHORIZED REPRESENTATIVE IMMEDIATELY IF ANY DISCREPANCIES ARE ENCOUNTERED. NO WORK SHALL PROCEED WITHOUT SHOP DRAWING APPROVAL.

4. CONTRACTOR SHALL MAINTAIN EXISTING IRRIGATION MAIN LINES IN WORKING ORDER. MINIMIZE ANY INTERRUPTIONS TO THE OPERATION AND FUNCTION OF THE EXISTING IRRIGATION SYSTEM AND COORDINATE ANY NECESSARY INTERRUPTIONS IN ADVANCE WITH CONSTRUCTION MANAGER AND RAP SITE STAFF. CONTRACTOR SHALL IRRIGATE, THROUGH THE DURATION OF CONSTRUCTION VIA AUTOMATIC PROGRAMMED WATERING SCHEDULES, TEMPORARY HIGHLINE, HAND WATERING, ETC. ALL EXISTING TURF, TREES AND PLANT MATERIAL DESIGNATED TO REMAIN. ANY DAMAGE RESULTING FROM CONSTRUCTION SHALL BE REPAIRED IMMEDIATELY TO PREVENT ANY LAPSE IN IRRIGATION FOR EXISTING PLANT MATERIALS. PLANT MATERIALS AND/OR IRRIGATION DAMAGED AS A RESULT OF CONSTRUCTION SHALL BE REPAIRED IMMEDIATELY TO A LIKE-NEW CONDITION. ANY PLANT MATERIAL WHICH BECOMES STRESSED OR PERISHES DURING CONSTRUCTION SHALL BE REPLACED IN-KIND BY CONTRACTOR AT NO ADDITIONAL COST TO THE OWNER.

5. ANY EXISTING IRRIGATION CONTROL VALVES CONNECTED TO THE EXISTING IRRIGATION SYSTEM/CONTROLLER SHALL BE CONNECTED TO THE NEW CONTROLLER AS REQUIRED. CONFIRM PROPER CONTROLLER OPERATION AND INSTALLATION WITH OWNER'S AUTHORIZED REPRESENTATIVE PRIOR TO STARTING WORK AND UPON COMPLETION OF WORK. CONTRACTOR SHALL USE THE FEWEST SPLICE POINTS NEEDED TO ACHIEVE PROPER CONNECTION. ALL CONTROL WIRE SPLICES SHALL BE LOCATED INSIDE SPLICE BOXES PER SPECIFICATIONS. ALL NEW CONTROL WIRE SHALL BE INSTALLED IN CONDUIT PER DETAILS AND SPECIFICATIONS.

6. CONTRACTOR SHALL RETROFIT ALL BATTERY VALVES LOCATED ON SITE TO THEIR RESPECTIVE MAIN LINE AND CONTROLLER TO MEET FLOW SENSING REQUIREMENTS. CONTRACTOR TO RUN NEW WIRES TO EXISTING BATTERY VALVES OR UTILIZE TWO (2)-WIRE RETROFIT DEVICES.

7. ALL EXISTING IRRIGATION VALVES SHALL BE RE-SEQUENCED TO ACCOMMODATE NEW IRRIGATION VALVES INSTALLED DURING CONSTRUCTION. ANY EXISTING VALVES THAT REQUIRE A NEW STATION NUMBER SHALL BE RE-TAGGED WITH THE CORRECT NUMBER PER THE RCV DETAIL INSIDE THE VALVE BOX, AND RE-LABELED WITH THE NEW STATION NUMBER ON THE VALVE BOX LID.

8. UPON COMPLETION OF ALL NEW IRRIGATION WORK, CONTROLLER SHALL BE REPROGRAMMED WITH A NEW IRRIGATION SCHEDULE PER NEW IRRIGATION PARAMETERS FOR EACH ZONE.

9. CONTRACTOR SHALL BE RESPONSIBLE FOR REPAIR, MODIFICATION, OR REROUTING OF ALL ADJACENT IRRIGATION SYSTEM EQUIPMENT THAT MAY BE AFFECTED BY NEW CONSTRUCTION IMPROVEMENTS. CONTRACTOR SHALL REPAIR SAID SYSTEMS TO A LIKE NEW MANNER, PROVIDING UNIFORM SPACING WITH NO LESS THAN 100% OF HEAD RADIUS COVERAGE IN ALL AREAS WITH SYSTEM LAYOUT AS APPROVED BY ENGINEER AND RAP MAINTENANCE STAFF PRIOR TO COMMENCING SUCH WORK.

10. DAMAGE TO OR ADJUSTMENTS REQUIRED FOR EXISTING IRRIGATION EQUIPMENT OR EXISTING UTILITIES, INCLUDING REPLACING OR RELOCATING IRRIGATION PIPING, HEADS, VALVES, WIRES, THAT OCCURS DUE TO CONSTRUCTION WORK IS THE RESPONSIBILITY OF THE CONTRACTOR AND SHALL BE PERFORMED AT NO ADDITIONAL COST TO THE OWNER. BCA INSPECTOR AND RAP SITE STAFF SHALL REVIEW AND APPROVE ANY REQUIRED MODIFICATIONS TO THESE AREAS PRIOR TO COMMENCING WORK.

11. WHERE NEW IRRIGATION SYSTEM WORK SCOPE PER PLANS DOES NOT INCLUDE SUFFICIENT VALVES TO SERVICE THE EXISTING IRRIGATION VALVE COVERAGE AREA, INCLUDING FOR HYDRO-ZONING PURPOSES DUE TO PLANTING TYPE AND IRRIGATION REQUIREMENTS, CONTRACTOR SHALL FURNISH AND INSTALL ADDITIONAL VALVES AND PIPING FOR COMPLETION OF THE IRRIGATION SYSTEM AND PROVIDING NECESSARY ZONING AND COVERAGE.

12. CONTRACTOR SHALL BE RESPONSIBLE FOR UPSIZING THE EXISTING IRRIGATION CONTROLLER BY FURNISHING AND INSTALLING ADDITIONAL STATION MODULES AS NEEDED TO ACCOMMODATE ALL STATIONS IN THE NEW IRRIGATION SYSTEM AS MODIFIED PER THESE PLANS; INCLUDING NEW 2-WIRE CONDUCTOR IN CONDUIT, SPLICE BOXES AND 2-WIRE DECODERS AS NEEDED, SEE IRRIGATION DETAILS FOR INSTALLATION.

13. CONTRACTOR SHALL BE RESPONSIBLE FOR THE COMPLETE REMOVAL AND DISPOSAL OF ALL EXISTING IRRIGATION EQUIPMENT WHERE REQUIRED BY THE PROPOSED IMPROVEMENTS. VERIFY ALL EQUIPMENT TO BE REMOVED AND DISPOSED OF IN FIELD PRIOR TO COMMENCING WORK AND COORDINATE WITH ENGINEER AND RAP MAINTENANCE STAFF. ANY EXISTING IRRIGATION EQUIPMENT REQUESTED FOR SALVAGE BY RAP STAFF SHALL BE HANDED OVER AFTER REMOVAL. ALL OTHER DEMOLISHED IRRIGATION COMPONENTS SHALL BE DISPOSED OF PROPERLY BY THE CONTRACTOR.

14. AFTER IRRIGATION DEMOLITION, CONTRACTOR SHALL BACKFILL AS NEEDED TO RESTORE GRADE TO ORIGINAL CONDITION WITH LIKE SOIL.

15. CONTRACTOR SHALL BE RESPONSIBLE FOR ALL REPAIRS NECESSARY TO RESTORE EXISTING IRRIGATION, LANDSCAPE PLANTING (INCLUDING PLANTS AND TURF), AND HARDSCAPE THAT HAVE BEEN DAMAGED BY NEW CONSTRUCTION ACTIVITY, INCLUDING LAYDOWN/MATERIAL STORAGE, VEHICULAR PARKING OR OTHER RELATED ACTIVITY. WHERE DAMAGE OCCURS, CONTRACTOR SHALL REMOVE AND REPLACE IN KIND AT THEIR OWN EXPENSE.

16. CONTRACTOR SHALL CONFIRM THAT EXISTING IRRIGATION CONTROLLER IS A SMART CONTROLLER AND SHALL FURNISH AND INSTALL A SMART IRRIGATION CONTROLLER IF NECESSARY. CONTRACTOR SHALL PROVIDE FLOW SENSING FEATURES, RAIN SENSOR, MASTER VALVE, AND FLOW SENSOR, PER THE STATE OF CALIFORNIA'S WATER CONSERVATION IN LANDSCAPING ACT (ASSEMBLY BILL 1881, UPDATED 2015 - MODEL WATER EFFICIENT LANDSCAPE ORDINANCE (M.W.E.L.O.)). ALL EQUIPMENT SHALL BE WIRED AND FULLY OPERATIONAL AT THE TIME OF FINAL ACCEPTANCE.

17. CONTRACTOR SHALL EXERCISE CAUTION WHEN INSTALLING IRRIGATION IMPROVEMENTS INSIDE OR ADJACENT TO DESIGNATED TREE PROTECTION ZONES (SEE TREE PROTECTION REQUIREMENTS ON SHEET LS100). INSIDE TPZ AREAS ONLY CAREFUL MANUAL TRENCHING METHODS OR AIR-SPADE ARE ALLOWED AND MUST BE PERFORMED UNDER THE SUPERVISION OF A CERTIFIED ARBORIST. NO ROOTS OVER 1" DIAMETER SHALL BE CUT. ALL TRENCHES INSIDE THE TPZ SHALL BE DONE IN A RADIAL PATTERN, PERPENDICULAR TO THE TPZ BORDER TO ACHIEVE THE SHORTEST DISTANCE. ALL MINOR ROOT-CUTTING SHALL BE PERFORMED UNDER THE SUPERVISION OF THE ARBORIST AND BE MADE AS A SINGLE CLEAN SHARP CUT. ANY ROOTS EXPOSED BY TRENCHING SHALL BE PROTECTED WITH MOIST BURLAP FABRIC UNTIL SOIL COVER IS REPLACED. FOR LARGE ROOTS OVER 4" DIAMETER ENCOUNTERED OUTSIDE OF TPZ AREA, CONTRACTOR SHALL TAKE MEASURES TO AVOID CUTTING ROOT BY PASSING PIPE UNDERNEATH OR ABOVE ROOT WHERE POSSIBLE. TREATMENT OR CUTTING OF ALL ROOTS OVER 1" DIAMETER SHALL BE SUPERVISED BY ARBORIST.

DIAL BEFORE YOU DIG
1-800-422-4133
DIGALERT
PLAY IT SAFE. DIAL BEFORE YOU DIG!
AT LEAST TWO WORKING DAYS PRIOR TO EXCAVATING
SERVING NINE SOUTHERN CALIFORNIA COUNTIES

FOR LADBS APPROVAL

carollo

REVISION DATES (DESIGN STAGE ONLY)

THE CITY OF LOS ANGELES OR ITS OFFICERS OR AGENTS SHALL NOT BE RESPONSIBLE FOR THE ACCURACY OR COMPLETENESS OF ELECTRONIC COPIES OF THIS PLAN SHEET.

ENGINEERING
CITY OF LOS ANGELES
Environmental Engineering Division

THIS PLAN WAS ELECTRONICALLY SIGNED AND STAMPED

LICENSED LANDSCAPE ARCHITECT
No. 5623
JAMES R. DYER
STATE OF CALIFORNIA
11-30-26
11-22-26

BUREAU OF ENGINEERING
VERTICAL CONTROL:
HORIZONTAL CONTROL:
SHEET TITLE: IRRIGATION NOTES
PROJECT: MACARTHUR LAKE STORMWATER CAPTURE PROJECT
ADDRESS: MACARTHUR PARK 2230 6TH ST LOS ANGELES CA 90057

DEPARTMENT OF PUBLIC WORKS
CITY OF LOS ANGELES

NO.	REVISIONS	DATE	BY

CIP NO. 192OR004
INDEX NO. D-XXXXX

DESIGN GROUP
DATE
ENGINEER:
ARCHITECT: KUSH PAREKH
DESIGNED BY: KUSH PAREKH
DRAWN BY: IAN MILLER, AILSA THAI
CHECKED BY:
APPROVED BY:

WORK ORDER
S33WMLRP, S043MSWC, S343MSWC

SHEET NAME
LI700A
SHEET 37 OF 108 SHEETS

FINAL DESIGN SUBMITTAL

GREEN BUILDING CODE NOTES

PROJECT ADDRESS: 2230 6TH ST. LOS ANGELES, CA 90057

TOTAL LANDSCAPE AREA: 5,198 S.F.

WATER SUPPLY: POTABLE WATER

WATER PURVEYOR: LOS ANGELES DEPARTMENT OF WATER AND POWER

WATER PRESSURE: HIGH-79 PSI, LOW-58 (POTABLE WATER)

IRRIGATION CONTROLLER AND IRRIGATION POINT OF CONNECTION ARE EXISTING. IT IS A 2-WIRE SYSTEM.

FOR PROJECTS THAT INCLUDE LANDSCAPE WORK, FORM GRN 12 SHALL BE COMPLETED PRIOR TO FINAL INSPECTION APPROVAL.

SOILS TEST: REFER TO GEOTECHNICAL REPORT AS PART OF THE ARCHITECTURAL PLAN CHECK SUBMITTAL. AN AGRICULTURAL SUITABILITY REPORT WILL BE FURNISHED TO THE PLANNING DEPARTMENT BY THE CONTRACTOR AS PART OF THE DEFERRED SUBMITTAL PACKAGE.

CERTIFICATION: I AGREE TO COMPLY WITH THE REQUIREMENTS OF THE WATER EFFICIENT LANDSCAPE ORDINANCE AND SUBMIT A COMPLETE LANDSCAPE DOCUMENTATION PACKAGE. I HAVE COMPLIED WITH THE CRITERIA OF THE ORDINANCE AND APPLIED THEM FOR THE EFFICIENT USE OF THE WATER IN LANDSCAPE DESIGN PLANS.

A DIAGRAM OF THE IRRIGATION PLAN SHOWING HYDROZONES SHALL BE KEPT WITH THE IRRIGATION CONTROLLER FOR SUBSEQUENT MANAGEMENT PURPOSES.

A CERTIFICATE OF COMPLETION SHALL BE FILLED OUT AND CERTIFIED BY EITHER THE DESIGNER OF THE LANDSCAPE PLANS, IRRIGATION PLANS, OR THE LICENSED LANDSCAPE CONTRACTOR FOR THE PROJECT.

AN IRRIGATION AUDIT REPORT SHALL BE COMPLETED AT THE TIME OF FINAL INSPECTION.

RECIRCULATING WATER SYSTEMS SHALL BE USED FOR WATER FEATURES.

A MINIMUM 3" LAYER OF MULCH SHALL BE APPLIED ON ALL EXPOSED SOIL SURFACES OF PLANTING AREAS EXCEPT FOR TURF AREAS, CREEPING OR ROOTING GROUNDCOVERS, OR DIRECT SEEDING APPLICATIONS WHERE MULCH IS INDICATED.

FOR SOILS LESS THAN 6% ORGANIC MATTER IN THE TOP 6 INCHES OF SOIL, COMPOST AT A RATE OF A MINIMUM OF FOUR CUBIC YARDS PER 1,000 SQUARE FEET OF PERMEABLE AREA SHALL BE INCORPORATED TO A DEPTH OF SIX INCHES INTO THE SOIL.

PRESSURE REGULATING DEVICES ARE REQUIRED IF WATER PRESSURE IS BELOW OR EXCEEDS THE RECOMMENDED PRESSURE OF THE SPECIFIED IRRIGATION DEVICES.

CHECK VALVES OR ANTI-DRAIN VALVES ARE REQUIRED ON ALL SPRINKLER HEADS WHERE LOW POINT DRAINAGE COULD OCCUR.

VALVE SCHEDULE

NUMBER	MODEL	SIZE	TYPE	GPM	HEADS	PSI	PSI @ POC	PRECIP
70	RAIN BIRD EFB-CP - SPRAY	2"	SHRUB SPRAY	14.27	18	30.6	43.0	1.47 in/h
71	RAIN BIRD EFB-CP - SPRAY	2"	SHRUB SPRAY	8.32	12	30.5	42.9	1.29 in/h
72	RAIN BIRD EFB-CP - SPRAY	2"	SHRUB SPRAY	8.36	13	30.5	43.0	1.57 in/h
73	RAIN BIRD EFB-CP - SPRAY	2"	SHRUB SPRAY	7.52	12	30.5	42.9	1.58 in/h
74	RAIN BIRD EFB-CP - SPRAY	2"	SHRUB SPRAY	13.89	18	30.5	43.0	1.31 in/h
75	RAIN BIRD EFB-CP - SPRAY	2"	SHRUB SPRAY	7.8	12	30.5	42.9	1.38 in/h
76	RAIN BIRD EFB-CP - SPRAY	2"	SHRUB SPRAY	14.36	21	30.6	43.1	1.36 in/h
77	RAIN BIRD EFB-CP - BUBBLER	2"	BUBBLER	1.5	6	20.5	32.9	1.06 in/h
Unknown	RCV (EXISTING)	2"				4.8	17.2	Unknown
Unknown	RCV (EXISTING)	2"				4.8	17.2	Unknown
Unknown	RCV (EXISTING)	2"				4.8	17.2	Unknown
Unknown	RCV (EXISTING)	2"				4.8	17.2	Unknown
Unknown	RCV (EXISTING)	2"				4.8	17.2	Unknown

IRRIGATION SCHEDULE

SYMBOL	MANUFACTURER/MODEL/DESCRIPTION	QTY	DETAIL
(8) (12) (10) (15)	RAIN BIRD 1812-SAM-PRS-U SHRUB SPRAY, 12IN. POP-UP SPRINKLER WITH CO-MOLDED WIPER SEAL. 1/2IN. NPT FEMALE THREADED INLET. WITH SEAL-A-MATIC CHECK VALVE, AND PRESSURE REGULATING DEVICE. NOZZLES ARE HUNTER MP-ROTATOR.	106	2/LI710
1401	RAIN BIRD RWS-M-B-C 1400 SERIES MINI ROOT WATERING SYSTEM WITH 4IN. DIAMETER X 18IN. LONG WITH LOCKING GRATE, SEMI-RIGID MESH TUBE AND RAIN BIRD 1401 0.25 GPM. WITH CHECK VALVE.	6	1/LI710
SYMBOL	MANUFACTURER/MODEL/DESCRIPTION	QTY	DETAIL
	RAIN BIRD EFB-CP - BUBBLER 1IN., 1-1/2IN., 2IN. BRASS REMOTE CONTROL VALVE, THAT IS CONTAMINATION PROOF W/SELF-FLUSHING FILTER SCREEN. GLOBE CONFIGURATION, INCLUDE RAINBIRD - FD101TURF FIELD DECODER - SIGNAL LINE, INDIVIDUAL VALVE.	1	3/LI710
	RAIN BIRD EFB-CP - SPRAY 1IN., 1-1/2IN., 2IN. BRASS REMOTE CONTROL VALVE, THAT IS CONTAMINATION PROOF W/SELF-FLUSHING FILTER SCREEN. GLOBE CONFIGURATION, INCLUDE RAINBIRD - FD101TURF FIELD DECODER - SIGNAL LINE, INDIVIDUAL VALVE.	7	3/LI710
	RCV (EXISTING) FOR REFERENCE ONLY. CONTRACTOR TO CONFIRM IN FIELD.	6	
	RAIN BIRD 44-LRC (NEW) 1IN. BRASS QUICK-COUPLING VALVE, WITH CORROSION-RESISTANT STAINLESS STEEL SPRING, LOCKING THERMOPLASTIC RUBBER COVER, AND 2-PIECE BODY.	2	4/LI710
	NIBCO T-113-K (NEW) CLASS 125 BRONZE GATE SHUT OFF VALVE WITH CROSS HANDLE, SAME SIZE AS MAINLINE PIPE DIAMETER AT VALVE LOCATION. SIZE RANGE - 1/4IN. - 3IN.	3	11/LI710
M	SUPERIOR 3100-PRS (NEW) 3" NORMALLY OPEN BRASS MASTER VALVE THAT PROVIDES DIRTY WATER PROTECTION. AVAILABLE IN 3/4IN., 1IN., 1-1/4IN., 1-1/2IN., 2IN., 2-1/2IN., AND 3IN.. PRESSURE REGULATION FEATURE. INCLUDE RAINBIRD - FD101TURF FIELD DECODER - SIGNAL LINE, INDIVIDUAL VALVE.	1	6/LI710
BF	EXISTING RP BACKFLOW 4" REDUCED PRESSURE BACKFLOW PREVENTER	1	
C	EXISTING CONTROLLER CONTRACTOR TO VERIFY CONTROLLER COMMUNICATION CARD, IF NON-FUNCTIONAL, CONTRACTOR TO INSTALL IQ4G-USA: 4G CELLULAR DATA MODEM WITH ANTENNA CONNECTOR, FOR USE IN USA.	1	
FS	RAIN BIRD FS-200-B (NEW) 2IN. FLOW SENSOR, BRASS MODEL. SUGGESTED OPERATING RANGE 10 GPM TO 100 GPM. SIZE FOR FLOW NOT ACCORDING TO PIPE SIZE. RAIN BIRD COMPATIBLE CONTROLLERS: ESP-LXIVM(P) | LXD | LXME2(P) | ME3, OR CONTROLLERS ACCEPTING CUSTOM K-FACTOR AND OFFSET. INSTALL IN RAIN BIRD VALVE BOX. INCLUDE RAINBIRD - SD211TURF SENSOR DECODER.	1	6/LI710
SM	IRRIGATION SUB-METER RECORDALL 170 DISC SERIES IRRIGATION SUB-METER.	2	5/LI711
SP	RAIN BIRD - LSP1TURF 2-WIRE LINE SURGE PROTECTION.	2	1/LI711
POC	POINT OF CONNECTION 3" CONNECT TO EXISTING RP BACKFLOW.	1	
	IRRIGATION LATERAL LINE: PVC SCHEDULE 40	1,132 LF	4/LI711
	IRRIGATION MAINLINE: PVC CLASS 315 SDR 13.5 (NEW)	478.6 LF	4/LI711
	IRRIGATION MAINLINE: EXISTING MAINLINE	497.2 LF	
	IRRIGATION MAINLINE: EXISTING MAIN LINE TO BE REMOVED.	239.1 LF	
	IRRIGATION MAINLINE: EXISTING MAINLINE (ABANDON IN PLACE)	126.9 LF	
	PIPE SLEEVE: PVC SCHEDULE 40	14.2 LF	4/LI711

VALVE CALLOUT
#• VALVE NUMBER
#• VALVE FLOW
#" • VALVE SIZE

WATER BUDGET CALCULATIONS

Landscape Area (LA)	
Regular	5198.00
Special	
TOTAL	**5,198.00**

Reference Evapotranspiration (ETo)	
Reference Site	Eto
Los Angeles	50.1

Conversion Factor (to Gallons/SF)
0.62

Evapotranspiration Adjustment Factor (ETAF)
0.45

Estimated Total Water Use (ETWU):

REGULAR LANDSCAPE AREAS

Hydrozone No.	Hydrozone Description	Hydrozone Area (FT^2)	Plant Factor (PF)	Irrigation Method	Irrigation Efficiency (IE)	ETAF (PF/IE)	(ETAF x Area)	Estimated Total Water Use (Gallons) (ETWU)
H-101	SHRUBS - LOW	5,123	0.3	Spray	0.75	0.40	2,049.20	63,652.25
H-102	TREES - LOW	75	0.3	Bubbler	0.81	0.37	27.78	862.83
	Total Area	**5,198**			**TOTALS**	**5198**	**2,076.98**	**64,515.08**

SPECIAL LANDSCAPE AREAS - IRRIGATED BY POTABLE WATER

Hydrozone No.	Hydrozone Description	Hydrozone Area (FT^2)	Plant Factor (PF)	Irrigation Method	Irrigation Efficiency (IE)	ETAF (PF/IE)	(ETAF x Area)	Estimated Total Water Use (ETWU)
					1	0.00	0.00	0.00
	Total Area	**0**			**TOTALS**		**0.00**	**0.00**

ETAF Calculations	
Regular Landscape Areas	
Average ETAF	**0.45**
All Landscape Areas	
Sitewide ETAF	**0.45**

ESTIMATED TOTAL WATER USE (ETWU)	**64,515**	**GALLONS**
MAXIMUM ALLOW WATER ALLOWANCE (MAWA)	**72,657**	**GALLONS**

IRRIGATION TRENCHING NOTES:

1. SEE TREE PROTECTION SPECIFICATIONS SHEET L-100A FOR TRENCHING IN THE TREE PROTECTION ZONES.
2. SPECIAL TRENCHING METHODS MAY BE REQUIRED INSIDE TREE PROTECTION ZONES INCLUDING HAND TRENCHING AT THE DISCRETION OF RAP FORESTRY AND/OR CONTRACTORS' MONITORING ARBORIST.
3. PLANS ARE DIAGRAMMATIC - LOCATE LATERAL LINE TRENCHES OUTSIDE OF TPZ AREAS WHENEVER POSSIBLE. CONTRACTOR SHALL OBTAIN APPROVAL OF PROPOSED LATERAL LINE TRENCH LAYOUT FROM PROJECT MANAGER PRIOR TO BEGINNING EXCAVATION.

IRRIGATION LAYOUT NOTE:

1. THE LAYOUT FOR THE NEW IRRIGATION CONSTRUCTION SHOWN ON THEE PLANS IS FOR BIDDING PURPOSES ONLY.
2. FINAL LAYOUT OF ALL NEW IRRIGATION HEADS SHALL BE CONDUCTED IN THE FIELD USING THE SPACING LISTED PER LEGEND AND USING THE LOCATION OF EXISTING ADJACENT HEADS TO REMAIN SO AS TO ACHIEVE STANDARD HEAD-TO-HEAD COVERAGE AND DISTRIBUTION UNIFORMITY.
3. ALL LAYOUT SHALL BE SUBJECT TO THE REVIEW AND APPROVAL BY CITY ENGINEER AND RAP STAFF.
4. CONTRACTOR SHALL BE REQUIRED TO INSTALL ALL REQUIRED NEW MAINLINE, VALVES, HEADS, LATERAL LINE, AND 2-WIRE DECODERS REQUIRED TO ACHIEVE FULL COVERAGE.
5. LARGE TURF AREA ZONES SHALL NOT EXCEED 5 HEADS PER VALVE.
6. LOCATION OF TREE PLANTING AND ASSOCIATED IRRIGATION HEADS MAY BE MODIFIED BY THE CITY AT TIME OF LAYOUT AT NO ADDITIONAL COST TO THE CITY. MAXIMUM CHANGE IN LOCATION SHALL BE LESS THAN 50'.

CRITICAL ANALYSIS

Generated: 2024-05-16 12:13

P.O.C. NUMBER: 01
Water Source Information: CONNECT TO EXISTING RP BACKFLOW.

FLOW AVAILABLE
Point of Connection Size: 3" WATER METER
Flow Available 159.76 GPM

PRESSURE AVAILABLE
Static Pressure at POC: 58 PSI
Pressure Available: 58 PSI

DESIGN ANALYSIS
Maximum Station Flow: 14.36 GPM
Flow Available at POC: 159.76 GPM
Residual Flow Available: 145.4 GPM

Critical Station: 76
Design Pressure: 30 PSI
Friction Loss: 0.13 PSI
Fittings Loss: 0.01 PSI
Elevation Loss: 0 PSI
Loss through Valve: 0.5 PSI
Pressure Req. at Critical Station: 30.6 PSI
Loss for Fittings: 0.0 PSI
Loss for Main Line: 0.03 PSI
Loss for POC to Valve Elevation: 0 PSI
Loss for Backflow: 10 PSI
Loss for Master Valve: 2.38 PSI
Critical Station Pressure at POC: 43.1 PSI
Pressure Available: 58 PSI
Residual Pressure Available: 14.9 PSI

FOR LADBS APPROVAL

carollo

ENGINEERING
CITY OF LOS ANGELES
Environmental Engineering Design

THIS PLAN WAS ELECTRONICALLY SIGNED AND STAMPED

LICENSED LANDSCAPE ARCHITECT JAE DYER 5623 STATE OF CALIFORNIA 11-30-26 1-22-26

BUREAU OF ENGINEERING
VERTICAL CONTROL:
HORIZONTAL CONTROL:
SHEET TITLE: IRRIGATION SCHEDULE & CALCULATIONS
PROJECT: MACARTHUR LAKE STORMWATER CAPTURE PROJECT
ADDRESS: MACARTHUR PARK 2230 6TH ST LOS ANGELES CA 90057

DEPARTMENT OF PUBLIC WORKS
CITY OF LOS ANGELES
NO. | REVISIONS | DATE | BY
INDEX NO. D-XXXXX
CIP NO. 1920R004

DESIGN GROUP | DATE
ENGINEER:
ARCHITECT: KUSH PAREKH
DESIGNED BY: KUSH PAREKH
DRAWN BY: IAN MILLER, AILSA THAI
CHECKED BY:
APPROVED BY:

WORK ORDER S33WMLRP, S043MSWC, S343MSWC

SHEET NAME LI700B
SHEET 38 OF 108 SHEETS

THE CITY OF LOS ANGELES OR ITS OFFICERS OR AGENTS SHALL NOT BE RESPONSIBLE FOR THE ACCURACY OR COMPLETENESS OF ELECTRONIC COPIES OF THIS PLAN SHEET.

REVISION DATES (DESIGN STAGE ONLY)

SHEET VERSION 4.0.1 FILE PATH: P:\MPR 2021 MACARTHUR PARK REHABILITATION\CAD\PROJECTWISE FILES\10 SHEETS\20213700LI700B.DWG PLOT DATE: 1/21/2026 12:06 PM SAVED: 12/19/2025 11:48 AM SAVED BY:AILSA

FINAL DESIGN SUBMITTAL

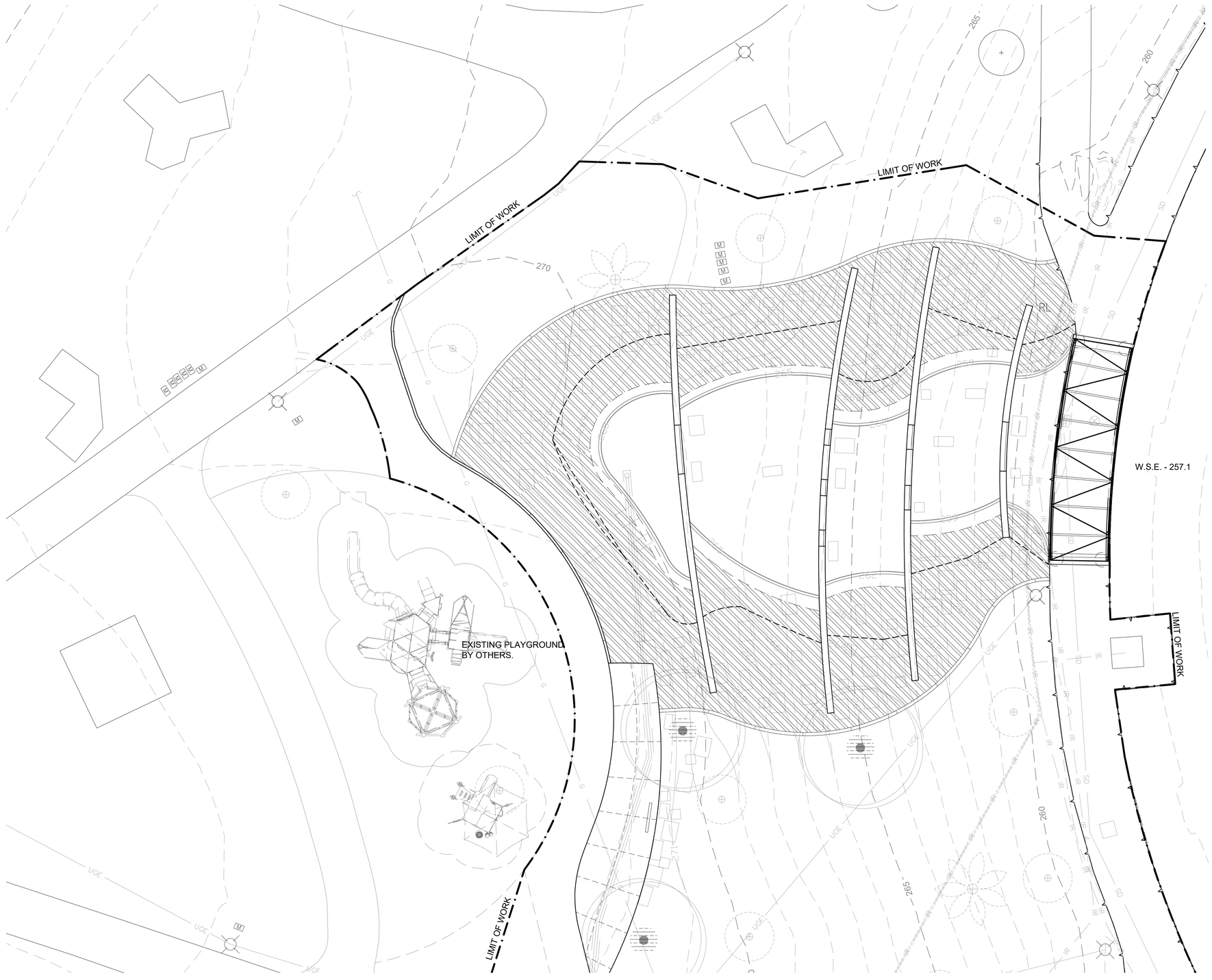

HYDROZONE SCHEDULE

SYMBOL	DESCRIPTION	QTY	PLANT FACTOR	IRRIGATION TYPE	IRRIGATION EFFICIENCY	WATER USE
H-101	SHRUBS - LOW WATER	5,123 SF	0.3	SPRAY	.75	LOW
H-102	TREES - LOW WATER	75 SF	0.3	BUBBLER	.81	LOW

FOR LADBS APPROVAL

carollo

ENGINEERING
CITY OF LOS ANGELES
Environmental Engineering Division

LICENSED LANDSCAPE ARCHITECT
JAY DYER
5623
STATE OF CALIFORNIA
11-30-26
11-22-26

• THIS PLAN WAS ELECTRONICALLY SIGNED AND STAMPED

BUREAU OF ENGINEERING

VERTICAL CONTROL:
HORIZONTAL CONTROL:

SHEET TITLE: HYDROZONE PLAN
PROJECT: MACARTHUR LAKE STORMWATER CAPTURE PROJECT
ADDRESS: MACARTHUR PARK 2230 6TH ST LOS ANGELES CA 90057

DEPARTMENT OF PUBLIC WORKS

NO	REVISIONS	DATE	BY

CIP NO. 1920R004

INDEX NO. D-XXXXX

CITY OF LOS ANGELES

DESIGN GROUP | DATE
ENGINEER:
ARCHITECT: KUSH PAREKH
DESIGNED BY: KUSH PAREKH
DRAWN BY: IAN MILLER, AILSA THAI
CHECKED BY:
APPROVED BY:

WORK ORDER
S33WMLRP, S043MSWC, S343MSWC

SHEET NAME
LI700C
SHEET 39 OF 108 SHEETS

THE CITY OF LOS ANGELES OR ITS OFFICERS OR AGENTS SHALL NOT BE RESPONSIBLE FOR THE ACCURACY OR COMPLETENESS OF ELECTRONIC COPIES OF THIS PLAN SHEET.

REVISION DATES (DESIGN STAGE ONLY)

CONTRACTOR SHALL BRING EXISTING VALVE MANIFOLD INTO COMPLIANCE WITH CURRENT RAP STANDARDS, SEE DETAIL 5/LI710.

SUB-METER INSTALLED TO MEASURE MANIFOLD WATER USAGE.

EXISTING VALVES FOR EXISTING TURF ROTORS. RELOCATE TURF ROTORS TO ENSURE HEAD-TO-HEAD COVERAGE WITH MATCH PRECIPITATION RATE VALVING. CONTRACTOR TO RELOCATE EXISTING VALVES TO SERVICE REVISED TURF AREA PER THE DIRECTION OF RAP.

TIE NEW MAINLINE INTO EXISTING MAINLINE. NEW WIRES TO BE TIED INTO EXISTING WIRE PATH. PROVIDE PULL BOX AT TIE-IN LOCATION.

NOTE:
IN ORDER TO TIE INTO EXISTING IRRIGATION EQUIPMENT IRRIGATION PLANS EXCEED LIMIT OF WORK.

CONTRACTOR TO POTHOLE EXISTING IRRIGATION EQUIPMENT TO PROVIDE LANDSCAPE ARCHITECT SHOP DRAWING OF EXISTING IRRIGATION SYSTEM BEFORE START OF WORK.

TIE EXISTING MAINLINE INTO NEW MAINLINE. EXISTING WIRES TO BE TIED INTO NEW WIRE PATH. PROVIDE PULL BOX AND TIE-IN LOCATION.

LIMIT OF WORK

14.3 70 2"
8.32 71 2"
8.36 72 2"
7.52 73 2"
13.9 74 2"
7.8 75 2"
14.4 76 2"
1.5 77 2"

EXISTING 2-WIRE CONTROLLER LOCATION. CONTRACTOR SHALL UPGRADE CONTROLLER MODULES AS REQUIRED FOR ADDITIONAL VALVES, MASTER VALVE AND FLOW SENSOR.

EXISTING PLAYGROUND BY OTHERS.

EXISTING MAINLINE TO BE REMOVED, SEE CIVIL DEMOLITION SHEETS.

NEW MAINLINE TO BE 4" MIN. OR MATCH EXISTING MAINLINE SIZE IF LARGER.

EXISTING MAINLINE TO BE ABANDONED IN PLACE, SEE CIVIL DEMOLITION SHEETS.

CUT AND CAP EXISTING MAINLINE. EXISTING WIRES TO BE REROUTED ON NEW MAINLINE PATH. PROVIDE PULL BOX AT TIE-IN LOCATION.

ESTIMATED EXISTING EQUIPMENT LOCATION, CONTRACTOR TO VERIFY IN FIELD, TYP.

W.S.E. - 257.1

0GPM 0PSI

MATCHLINE - SEE SHEET LI702

0 5' 10' 20'
1" = 10'

FOR LADBS APPROVAL

carollo

THE CITY OF LOS ANGELES OR ITS OFFICERS OR AGENTS SHALL NOT BE RESPONSIBLE FOR THE ACCURACY OR COMPLETENESS OF ELECTRONIC COPIES OF THIS PLAN SHEET.

REVISION DATES (DESIGN STAGE ONLY)

ENGINEERING
CITY OF LOS ANGELES
Environmental Engineering Division

• THIS PLAN WAS ELECTRONICALLY SIGNED AND STAMPED

LICENSED LANDSCAPE ARCHITECT
JAY DYER
5623
STATE OF CALIFORNIA
11-30-26
11-22-26

DEPARTMENT OF PUBLIC WORKS
BUREAU OF ENGINEERING
CITY OF LOS ANGELES

NO	REVISIONS	DATE	BY

CIP NO. 1920R004

INDEX NO. D-XXXXX

VERTICAL CONTROL:
HORIZONTAL CONTROL:

SHEET TITLE: IRRIGATION PLAN, SHEET 1

PROJECT: MACARTHUR LAKE STORMWATER CAPTURE PROJECT

ADDRESS: MACARTHUR PARK
2230 6TH ST LOS ANGELES CA 90057

DESIGN GROUP

ENGINEER:
ARCHITECT: KUSH PAREKH
DESIGNED BY: KUSH PAREKH
DRAWN BY: IAN MILLER, AILSA THAI
CHECKED BY:
APPROVED BY:

DATE

WORK ORDER
S33WMLRP, S043MSWC, S343MSWC

SHEET NAME
LI701
SHEET 40 OF 108 SHEETS

FINAL DESIGN SUBMITTAL

MATCHLINE - SEE SHEET LI701

ESTIMATED EXISTING EQUIPMENT LOCATION, CONTRACTOR TO VERIFY IN FIELD, TYP.

LIMIT OF WORK

W.S.E

PER 1970 PARK IMPROVEMENT AS-BUILTS, IRRIGATION MAINLINE. CONTRACTOR TO CONFIRM.

PER 1970 PARK IMPROVEMENT AS-BUILTS, IRRIGATION MAINLINE ABANDONED IN PLACE. CONTRACTOR TO CONFIRM.

INSTALL MASTER VALVE AND FLOW SENSOR DIRECTLY DOWNSTREAM OF EXISTING RP BACKFLOW DEVICE TO COMPLY WITH MWELO CODE PER SITE MEETING WITH RAP ON 2/14/2024.

MASTER VALVE AND FLOW SENSOR TO BE TIED INTO EXISTING TWO-WIRE SYSTEM WITH TWO-WIRE DECODERS. PULL BOX TO BE LOCATED AT POINT OF TIE IN.

POC IS DIAGRAMMATIC.

EXISTING 3" WATER METER.

EXISTING RP BACKFLOW DEVICE AND ENCLOSURE.

NOTE:
IN ORDER TO TIE INTO EXISTING IRRIGATION EQUIPMENT IRRIGATION PLANS EXCEED LIMIT OF WORK.

CONTRACTOR TO POTHOLE EXISTING IRRIGATION EQUIPMENT TO PROVIDE LANDSCAPE ARCHITECT SHOP DRAWING OF EXISTING IRRIGATION SYSTEM BEFORE START OF WORK.

0 5' 10' 20'
1" = 10'

FOR LADBS APPROVAL

carollo

THE CITY OF LOS ANGELES OR ITS OFFICERS OR AGENTS SHALL NOT BE RESPONSIBLE FOR THE ACCURACY OR COMPLETENESS OF ELECTRONIC COPIES OF THIS PLAN SHEET.

REVISION DATES (DESIGN STAGE ONLY)

ENGINEERING
CITY OF LOS ANGELES
Environmental Engineering Division

• THIS PLAN WAS ELECTRONICALLY SIGNED AND STAMPED

LICENSED LANDSCAPE ARCHITECT
JAY DYER
5623
STATE OF CALIFORNIA
11-30-26
1-22-26

BUREAU OF ENGINEERING
VERTICAL CONTROL:
HORIZONTAL CONTROL:
SHEET TITLE: IRRIGATION PLAN, SHEET 2
PROJECT: MACARTHUR LAKE STORMWATER CAPTURE PROJECT
ADDRESS: MACARTHUR PARK 2230 6TH ST LOS ANGELES CA 90057

DEPARTMENT OF PUBLIC WORKS

NO	REVISIONS	DATE	BY

CIP NO. 1920R004

INDEX NO. D-XXXXX

CITY OF LOS ANGELES

DESIGN GROUP | DATE
ENGINEER:
ARCHITECT: KUSH PAREKH
DESIGNED BY: KUSH PAREKH
DRAWN BY: IAN MILLER, AILSA THAI
CHECKED BY:
APPROVED BY:

WORK ORDER
S33WMLRP, S043MSWC, S343MSWC

SHEET NAME
LI702
SHEET 41 OF 108 SHEETS

FINAL DESIGN SUBMITTAL

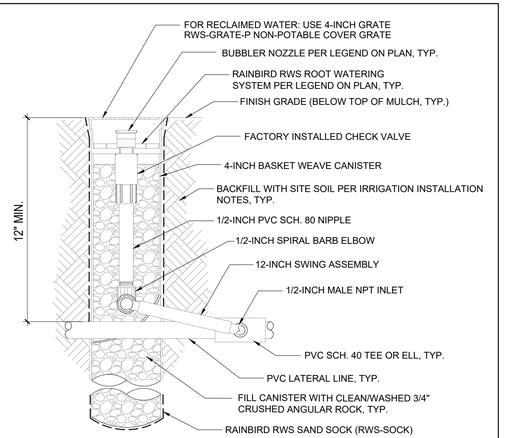

1 ROOT WATERING SYSTEM BUBBLER ASSEMBLY

NTS | BOE VERSION Sep/07 - RF | RP DETAIL L1660

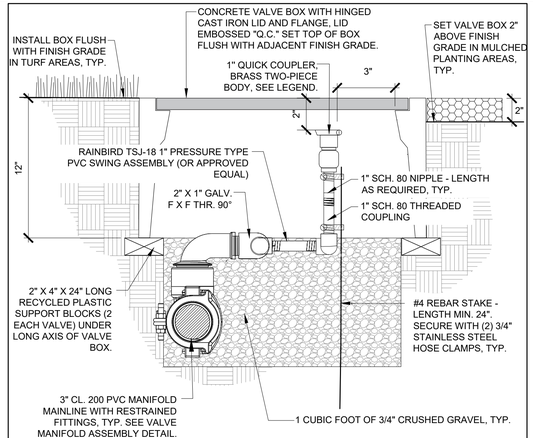

NOTES:
1) SEE RELATED DETAIL FOR MANIFOLD PIPE & FITTINGS.

VERSION 05/16/17 RWF/gm

4 QUICK COUPLING VALVE INSTALLATION DETAIL

NTS | RP DETAIL L1201

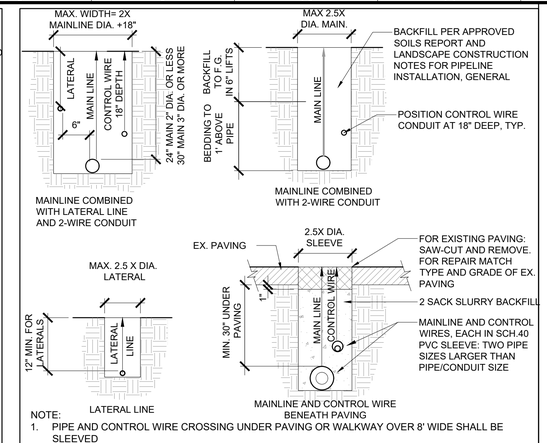

NOTE:
1. PIPE AND CONTROL WIRE CROSSING UNDER PAVING OR WALKWAY OVER 8' WIDE SHALL BE SLEEVED AS INDICATED ABOVE.
2. PIPE BEDDING AND BACKFILL SHALL BE PER APPROVED SOILS REPORT AND LANDSCAPE CONSTRUCTION NOTES, PIPELINE INSTALLATION GENERAL.

7 IRRIGATION TRENCHING DETAIL - 2 WIRE

NTS | BOE VERSION 02/08/18 | RP DETAIL 1350

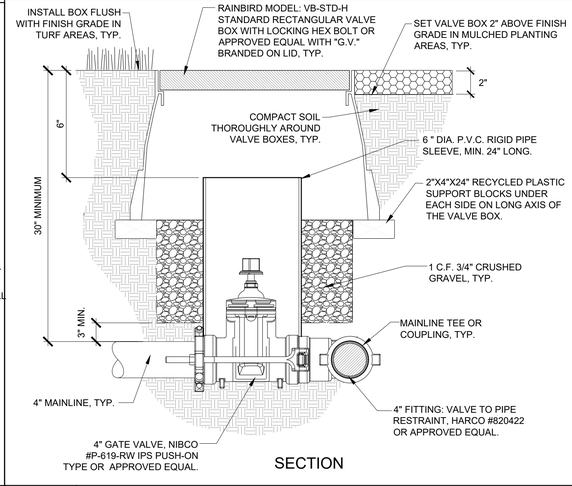

SECTION

10 4" MAINLINE ISOLATION VALVE

N.T.S. | BOE VERSION May/17 - RF/gm | RP DETAIL L1101

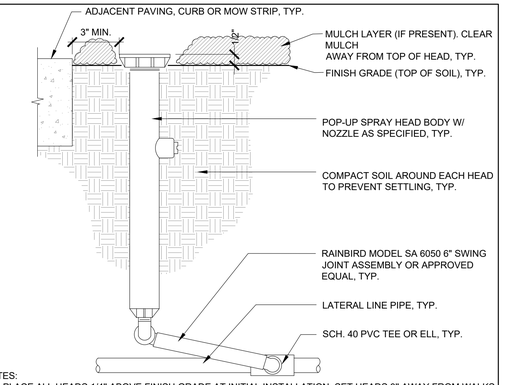

NOTES:
1. PLACE ALL HEADS 1/4" ABOVE FINISH GRADE AT INITIAL INSTALLATION. SET HEADS 3" AWAY FROM WALKS, CURBS, OR MOW STRIPS.
2. INSTALL ALL HEADS PERPENDICULAR TO FINISH GRADE.
3. THOROUGHLY FLUSH ALL LATERAL LINE PIPES TO REMOVE DIRT AND DEBRIS BEFORE INSTALLATION OF NOZZLES.
4. ADJUST ALL HEADS TO PROPER ARC AND RADIUS AS NECESSARY TO ACHIEVE PROPER COVERAGE AND UNIFORMITY. IF PROPER COVERAGE AND UNIFORMITY IS NOT ACHIEVED WITH THE SPECIFIED NOZZLE, CONTRACTOR SHALL CHANGE NOZZLE AS NEEDED UNTIL DESIRED PERFORMANCE IS ACHIEVED.

2 POP-UP SPRAY HEAD INSTALLATION

NTS | BOE VERSION 02/08/18 | RP DETAIL 1401

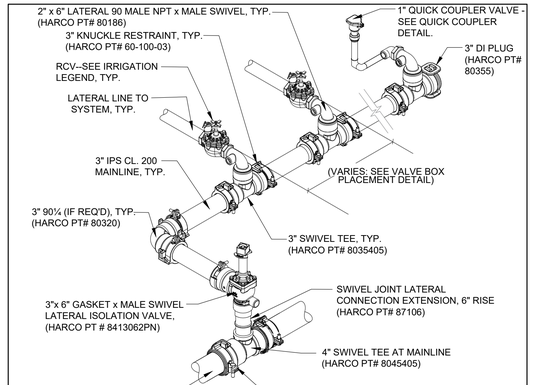

NOTES:
1.) ALL FITTINGS AND RESTRAINTS ARE AS AS MANUFACTURED BY HARCO FITTINGS (www.harcofittings.com) OR APPROVED EQUAL. INSTALL ALL FITTINGS AND RESTRAINTS PER MANUFACTURER'S INSTRUCTIONS.
2.) SEE VALVE BOX PLACEMENT, RCV INSTALLATION, AND QUICK COUPLER INSTALLATION DETAILS FOR ADDITIONAL INFORMATION.

5 VALVE MANIFOLD ASSEMBLY

NTS | BOE VERSION 02/16/18 RWF | RP DETAIL 135

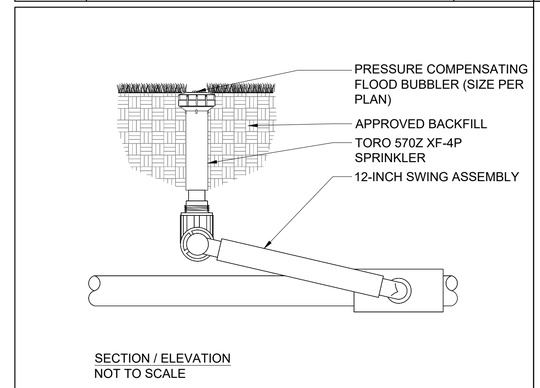

SECTION / ELEVATION
NOT TO SCALE

NOTES:
1. INSTALL SPRINKLER AT FINISHED GRADE.
2. INSTALLATION TO BE COMPLETED IN ACCORDANCE WITH MANUFACTURER'S SPECIFICATIONS.
3. DO NOT SCALE DRAWING.

8 PRESSURE COMPENSATING FLOOD BUBBLER

NTS | BOE VERSION 02/08/18

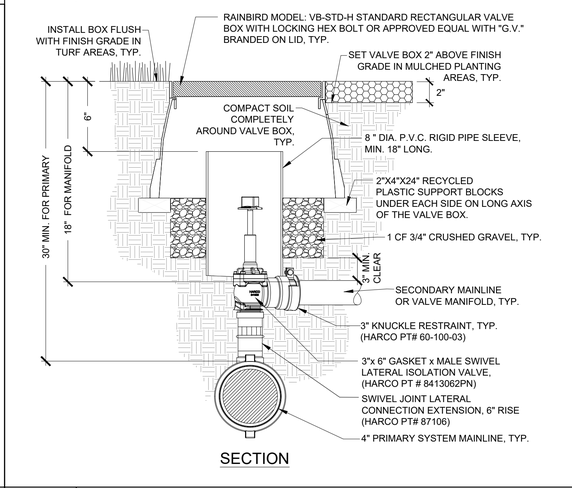

SECTION

11 MANIFOLD GATE VALVE, 3" and Larger Mainline

N.T.S. | BOE VERSION 02/14/18 - RF | RP DETAIL L1102

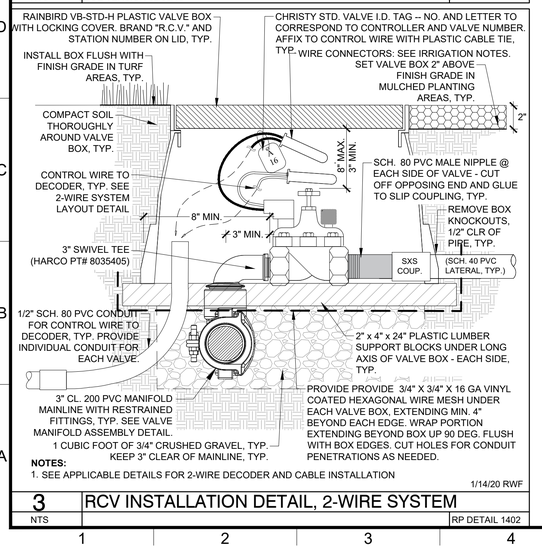

NOTES:
1. SEE APPLICABLE DETAILS FOR 2-WIRE DECODER AND CABLE INSTALLATION

1/14/20 RWF

3 RCV INSTALLATION DETAIL, 2-WIRE SYSTEM

NTS | RP DETAIL 1402

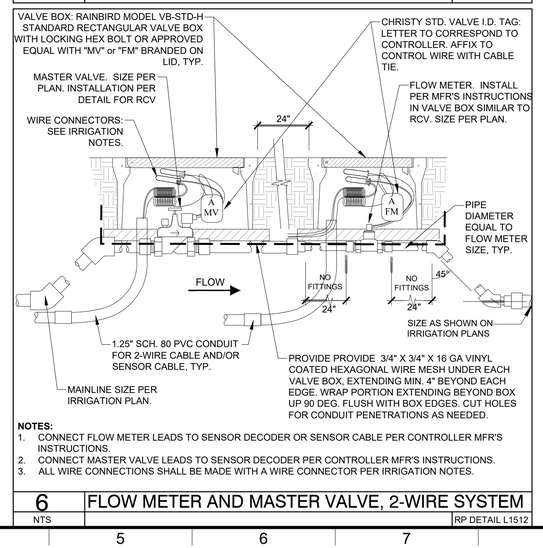

NOTES:
1. CONNECT FLOW METER LEADS TO SENSOR DECODER OR SENSOR CABLE PER CONTROLLER MFR'S INSTRUCTIONS.
2. CONNECT MASTER VALVE LEADS TO SENSOR DECODER PER CONTROLLER MFR'S INSTRUCTIONS.
3. ALL WIRE CONNECTIONS SHALL BE MADE WITH A WIRE CONNECTOR PER IRRIGATION NOTES.

6 FLOW METER AND MASTER VALVE, 2-WIRE SYSTEM

NTS | RP DETAIL L1512

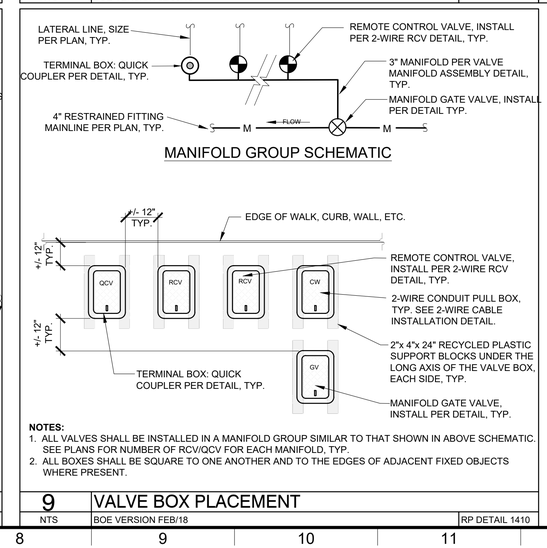

NOTES:
1. ALL VALVES SHALL BE INSTALLED IN A MANIFOLD GROUP SIMILAR TO THAT SHOWN IN ABOVE SCHEMATIC. SEE PLANS FOR NUMBER OF RCV/QCV FOR EACH MANIFOLD, TYP.
2. ALL BOXES SHALL BE SQUARE TO ONE ANOTHER AND TO THE EDGES OF ADJACENT FIXED OBJECTS WHERE PRESENT.

9 VALVE BOX PLACEMENT

NTS | BOE VERSION FEB/18 | RP DETAIL 1410

FOR LADBS APPROVAL

carollo

THE CITY OF LOS ANGELES OR ITS OFFICERS OR AGENTS SHALL NOT BE RESPONSIBLE FOR THE ACCURACY OR COMPLETENESS OF ELECTRONIC COPIES OF THIS PLAN SHEET.

REVISION DATES (DESIGN STAGE ONLY)

ENGINEERING
CITY OF LOS ANGELES
Environmental Engineering Design

LICENSED LANDSCAPE ARCHITECT — JAN DYER — 5623 — 11-30-26 — 1-22-26 — VENTURA — STATE OF CALIFORNIA

• THIS PLAN WAS ELECTRONICALLY SIGNED AND STAMPED

BUREAU OF ENGINEERING
VERTICAL CONTROL:
HORIZONTAL CONTROL:
SHEET TITLE: IRRIGATION DETAILS, SHEET 1
PROJECT: MACARTHUR LAKE STORMWATER CAPTURE PROJECT
ADDRESS: MACARTHUR PARK 2230 6TH ST LOS ANGELES CA 90057

DEPARTMENT OF PUBLIC WORKS
CITY OF LOS ANGELES

NO.	REVISIONS	DATE	BY

DESIGN GROUP
ENGINEER:
ARCHITECT: KUSH PAREKH
DESIGNED BY: KUSH PAREKH
DRAWN BY: IAN MILLER, AILSA THAI
CHECKED BY:
APPROVED BY:

CIP NO. 1920R004
INDEX NO. D-XXXXX
WORK ORDER S33WMLRP, S043MSWC, S343MSWC
SHEET NAME LI710
SHEET 42 OF 108 SHEETS

SHEET VERSION 4.0.1 FILE PATH: P:\MPR 2021 MACARTHUR PARK REHABILITATION\CAD\PROJECTWISE FILES\10 SHEETS\20213700LI710.DWG PLOT DATE: 1/21/2026 12:06 PM SAVED: 12/19/2025 11:56 AM SAVED BY:AILSA

FINAL DESIGN SUBMITTAL

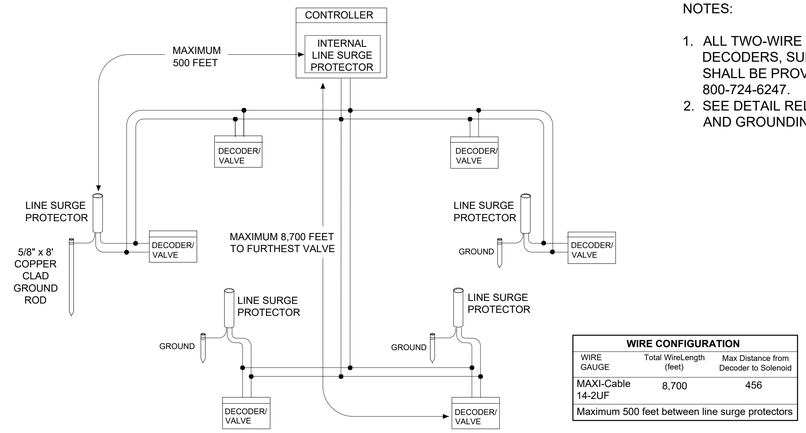

NOTES:

1. ALL TWO-WIRE COMPONENTS (WIRE, DECODERS, SURGE PROTECTORS, ETC.) SHALL BE PROVIDED BY RAINBIRD, 800-724-6247.
2. SEE DETAIL RELATED DETAILS FOR WIRING AND GROUNDING CONNECTIONS.

WIRE CONFIGURATION		
WIRE GAUGE	Total WireLength (feet)	Max Distance from Decoder to Solenoid
MAXI-Cable 14-2UF	8,700	456
Maximum 500 feet between line surge protectors		

1 2-WIRE SYSTEM LAYOUT

NTS | B.O.E. 02/16/18 | RP DETAIL L1372

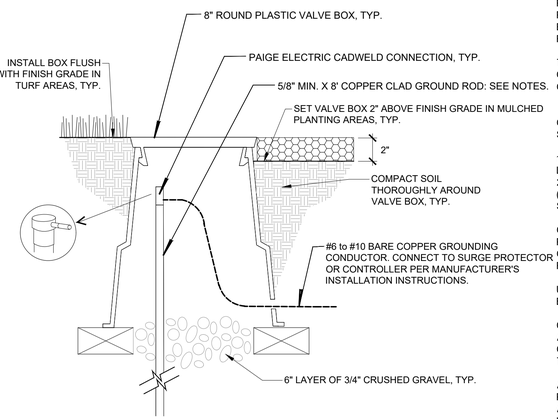

2 2-WIRE SYSTEM GROUNDING ROD

NTS.

TWO-WIRE SYSTEM GROUNDING REQUIREMENTS:

SURGE PROTECTION USING PROPER GROUNDING RODS AND RAINBIRD LINE SURGE PROTECTION, LSP-1 (WHERE IT IS NOT ALREADY BUILT INTO THE DECODER) IS REQUIRED FOR PROTECTION AGAINST SURGE DAMAGE DUE TO LIGHTNING OR OTHER ELECTRICAL SURGE EVENTS. CONFORMANCE TO THIS SURGE SUPPRESSION SPECIFICATION IS NECESSARY TO RETAIN WARRANTY PROTECTION UNDER RAINBIRD WARRANTY TERMS.

THE INSTALLATION SHALL CONFORM TO MANUFACTURER'S INSTRUCTIONS, AND MUST MEET OR EXCEED THE AMERICAN SOCIETY OF IRRIGATION CONSULTANTS (ASIC) EARTH GROUNDING GUIDELINE 100-2002.
HTTP://WWW.ASIC.ORG/UPLOADS/ASSETS/011007_121320_ASIC_GROUNDING_GUIDELINES.DOC

GROUND RODS AS REFERRED TO IN THIS SPECIFICATION SHALL CONFORM TO THE FOLLOWING STANDARDS:

1.) ALL GROUNDING RODS SHALL BE BARE COPPER OF 5/8" DIAMETER OR GREATER, AND 8' LENGTH OR GREATER.
2.) A MEASURED RESISTANCE READING OF LESS THAN 10 OHMS IS NECESSARY AT EACH LSP-1 (OR DECODER WHERE SURGE PROTECTION IS BUILT INTO THE DECODER). ASIC SPEC: SECTION 7.0 - MEASURING RESISTANCE, ITEM A.

GROUND RODS SHALL BE LOCATED AT A MINIMUM DISTANCE TO ASSURE THAT THE TWO-WIRE PATH IS OUTSIDE OF THE ELECTRODE SPHERE OF INFLUENCE FOR THE GROUNDING ROD: THE GROUND ROD MUST BE CONNECTED AT LEAST 8' AWAY FROM THE TWO-WIRE PATH, AT A RIGHT ANGLE TO THE TWO-WIRE PATH.

UNDER NO CIRCUMSTANCES SHOULD A GROUND ROD BE INSTALLED IN OR UNDER A VALVE BOX, METER BOX OR ELECTRICAL BOX.

CONNECTIONS TO GROUNDING RODS
ALL CONNECTIONS TO GROUND RODS SHALL CONFORM TO ASIC EARTH GROUNDING GUIDELINE 100-2002, AND SHALL CONSIST OF EITHER A CADWELD TYPE OR SCREW CLAMP TYPE OF CONNECTION. CADWELD OR EQUIVALENT CONNECTIONS ARE PREFERRED.

ANY WIRE EXTENSIONS REQUIRED TO CONNECT FROM A GROUND ROD TO A SURGE PROTECTOR OR ENCLOSURE GROUND LUG SHALL BE BARE COPPER, AND SHALL NOT HAVE ANY SHARP BENDS OR KINKS. WIRE EXTENSIONS CONNECTED TO SURGE PROTECTORS SHALL USE A CADWELD TYPE OR SCREW CLAMP TYPE CONNECTION WHERE THE BARE COPPER GROUND WIRE MEETS THE GREEN GROUNDING WIRE FROM THE SURGE PROTECTOR.

3 2-WIRE CABLE INSTALLATION AND GROUNDING

N.T.S. | RP DETAIL L1432

NOTE:
1. PIPE AND CONTROL WIRE CROSSING UNDER PAVING OR WALKWAY OVER 8' WIDE SHALL BE SLEEVED AS INDICATED ABOVE.
2. PIPE BEDDING AND BACKFILL SHALL BE PER APPROVED SOILS REPORT AND LANDSCAPE CONSTRUCTION NOTES, PIPELINE INSTALLATION GENERAL.

4 IRRIGATION TRENCHING DETAIL - 2 WIRE

N.T.S. | BOE VERSION FEB/24 | RP DETAIL 1350

NOTE: INLET PIPE ENTERING METER: LENGTH MUST BE A MIN. OF 10 X PIPE DIA.
OUTLET PIPE LEAVING METER: LENGTH MUST BE MIN. OF 5 X PIPE DIA.
INLET AND OUTLET PIPE MUST BE STRAIGHT PIPE WITH NO FITTINGS OR TURNS UNTIL AFTER THESE SPECIFIED LENGTHS. PIPE AND FITTINGS MAY BE SCH 80 PVC SOLVENT WELD, THREADED SCH 80 PVC OR BRASS, AS REQUIRED FOR PROJECT.

DETAIL LEGEND:
1. RECORDALL DISC 170 WITH UNION CONNECTIONS
2. SCH 80 PVC FEMALE ADAPTER (S X T)
3. RECTANGULAR VALVE BOX PER SPECIFICATIONS
4. SCH 80 PVC 45 DEGREE ELBOW (S X S) TO LOWER MAIN LINE TO PROPER DEPTH (SIZE FOR LARGER MAIN LINE AS NEEDED)
5. SCH 80 PVC 45 DEGREE ELBOW (S X S) TO LOWER MAIN LINE TO PROPER DEPTH
6. 2" DIA. (80 mm) MAIN LINE AT INLET & OUTLET
7. MAIN LINE TO SYSTEM (SEE LEGEND AND PLANS FOR TYPE AND SIZE)
8. TWO WIRES TO FLOW SENSOR TERMINALS AT CONTROLLER. MIN. 18 AWG-UF (2.08 mm²) SHIELDED WIRE WITH DIFFERENT COLOR FROM CONTROL/COMMON WIRE.
9. WEATHERPROOF WIRE CONNECTOR
10. FINISH GRADE
11. SPECIFIED SOIL COVER (SEE LEGEND)
12. COMMON BRICK
13. GRAVEL BASE, 6" (15 cm) DEEP

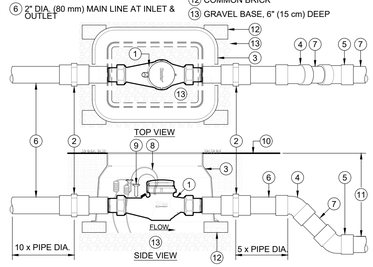

5 IRRIGATION SUB-METER

N.T.S.

TERMINAL OR MANIFOLD BOX

NOTES:

1. ALL CONDUIT AND FITTINGS SHALL BE SCHEDULE 80 PVC. CHANGES IN DIRECTION OF CONDUIT PATH SHALL NOT EXCEED 360 DEG. FOR EACH SECTION BETWEEN PULL BOXES.
2. MAXIMUM DISTANCE BETWEEN PULL BOXES SHALL BE 200 FEET.
3. MAXIMUM LENGTH OF SECONDARY WIRE PATH (14 AWG) FROM FIELD DECODER TO SOLENOID IS 450 FEET.
4. PROVIDE A COIL OF MIN. 24" OF 2-WIRE CABLE AT EACH SPLICE OR DECODER CONNECTION POINT.

TWO-WIRE SYSTEM GROUNDING REQUIREMENTS:

SURGE PROTECTION USING PROPER GROUNDING RODS IS REQUIRED FOR PROTECTION AGAINST SURGE DAMAGE DUE TO LIGHTNING OR OTHER ELECTRICAL SURGE EVENTS. CONFORMANCE TO THIS SURGE SUPPRESSION SPECIFICATION IS NECESSARY TO RETAIN WARRANTY PROTECTION UNDER MANUFACTURER'S WARRANTY TERMS.

THE INSTALLATION SHALL CONFORM TO MANUFACTURER'S INSTRUCTIONS, AND MUST MEET OR EXCEED THE AMERICAN SOCIETY OF IRRIGATION CONSULTANTS (ASIC) EARTH GROUNDING GUIDELINE 100-2002.
HTTP://WWW.ASIC.ORG/UPLOADS/ASSETS/011007_121320_ASIC_GROUNDING_GUIDELINES.DOC

GROUND RODS AS REFERRED TO IN THIS SPECIFICATION SHALL CONFORM TO THE FOLLOWING STANDARDS:

1.) ALL GROUNDING RODS SHALL BE BARE COPPER OF 5/8" DIAMETER OR GREATER, AND 8' LENGTH OR GREATER.

2.) A MEASURED RESISTANCE READING OF NO MORE THAN 10 OHMS IS NECESSARY AT EACH LIGHTNING ARRESTOR. ASIC SPEC: SECTION 7.0 - MEASURING RESISTANCE, ITEM A.

GROUND RODS SHALL BE LOCATED AT A MINIMUM DISTANCE TO ASSURE THAT THE TWO-WIRE PATH IS OUTSIDE OF THE ELECTRODE SPHERE OF INFLUENCE FOR THE GROUNDING ROD: THE GROUND ROD MUST BE CONNECTED AT LEAST 8' AWAY FROM THE TWO-WIRE PATH, AT A RIGHT ANGLE TO THE TWO-WIRE PATH.

UNDER NO CIRCUMSTANCES SHOULD A GROUND ROD BE INSTALLED IN OR UNDER A VALVE BOX, METER BOX OR ELECTRICAL BOX.

CONNECTIONS TO GROUNDING RODS:
ALL CONNECTIONS TO GROUND RODS SHALL CONFORM TO ASIC EARTH GROUNDING GUIDELINE 100-2002, AND SHALL CONSIST OF A SCREW CLAMP TYPE OF CONNECTION.

ANY WIRE EXTENSIONS REQUIRED TO CONNECT FROM A GROUND ROD TO A LIGHTNING ARRESTOR OR ENCLOSURE GROUND LUG SHALL BE BARE COPPER, AND SHALL NOT HAVE ANY SHARP BENDS OR KINKS. WIRE EXTENSIONS CONNECTED TO LIGHTNING ARRESTORS SHALL USE A CADWELD TYPE OR SCREW CLAMP TYPE CONNECTION WHERE THE BARE COPPER GROUND WIRE MEETS THE GREEN GROUNDING WIRE FROM THE LIGHTNING ARRESTOR.

FOR LADBS APPROVAL

ENGINEERING
CITY OF LOS ANGELES
Environmental Engineering Division

THIS PLAN WAS ELECTRONICALLY SIGNED AND STAMPED

LICENSED LANDSCAPE ARCHITECT — JAN DYER — 5623 — 11-30-26 — 1-22-26 — STATE OF CALIFORNIA

BUREAU OF ENGINEERING
VERTICAL CONTROL:
HORIZONTAL CONTROL:
SHEET TITLE: IRRIGATION DETAILS, SHEET 2
PROJECT: MACARTHUR LAKE STORMWATER CAPTURE PROJECT
ADDRESS: MACARTHUR PARK 2230 6TH ST LOS ANGELES CA 90057

DEPARTMENT OF PUBLIC WORKS

NO	REVISIONS	DATE	BY

CIP NO. 1920R004
INDEX NO. D-XXXXX

CITY OF LOS ANGELES
DESIGN GROUP | DATE
ENGINEER:
ARCHITECT: KUSH PAREKH
DESIGNED BY: KUSH PAREKH
DRAWN BY: IAN MILLER, AILSA THAI
CHECKED BY:
APPROVED BY:

WORK ORDER
S33WMLRP, S043MSWC, S343MSWC

SHEET NAME
LI711
SHEET 43 OF 108 SHEETS

carollo

THE CITY OF LOS ANGELES OR ITS OFFICERS OR AGENTS SHALL NOT BE RESPONSIBLE FOR THE ACCURACY OR COMPLETENESS OF ELECTRONIC COPIES OF THIS PLAN SHEET.

REVISION DATES (DESIGN STAGE ONLY)

SHEET VERSION 4.0.1 FILE PATH: P:\MPR 2021 MACARTHUR PARK REHABILITATION\CAD\PROJECTWISE FILES\10 SHEETS\20213700LI711.DWG PLOT DATE: 1/21/2026 12:06 PM SAVED: 12/19/2025 11:57 AM SAVED BY:AILSA

FINAL DESIGN SUBMITTAL

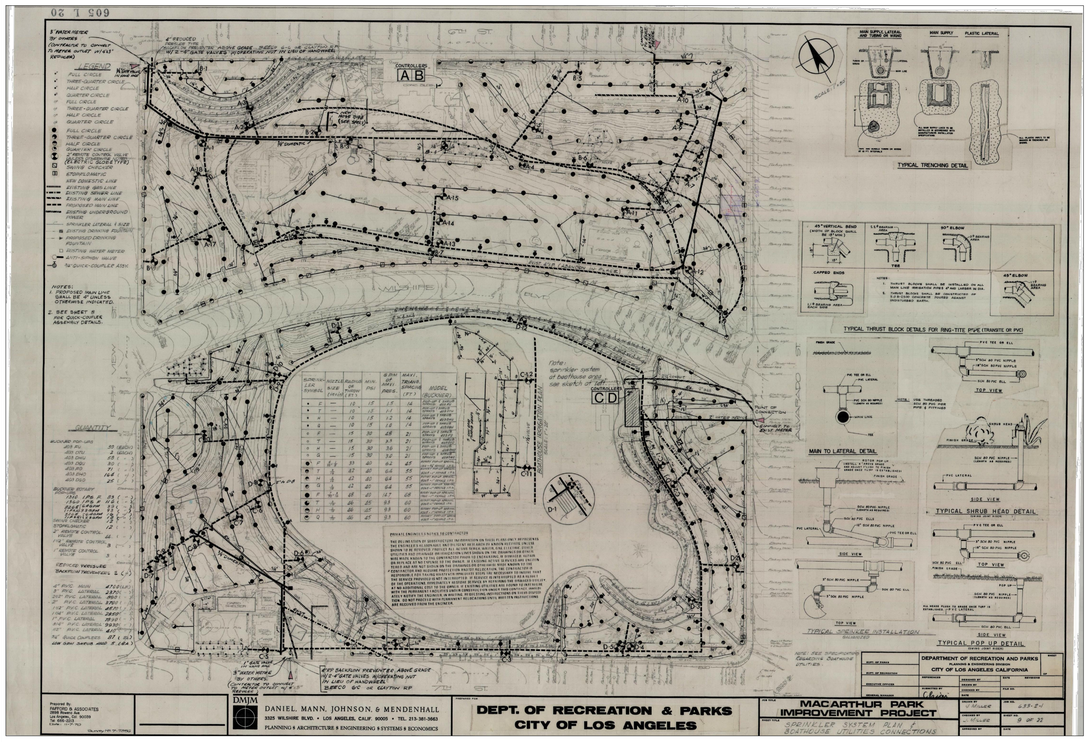

MACARTHUR PARK IMPROVEMENTS - IRRIGATION PLAN
DATE:11/7/1970



CONTRACTOR HAND DRAWN AS-BUILTS
DATE:UNKNOWN

FOR LADBS APPROVAL

carollo

ENGINEERING
CITY OF LOS ANGELES
Environmental Engineering Division

• THIS PLAN WAS ELECTRONICALLY SIGNED AND STAMPED

LICENSED LANDSCAPE ARCHITECT
JAY DYER
5623
11-30-26
11-22-26
STATE OF CALIFORNIA

BUREAU OF ENGINEERING
VERTICAL CONTROL:
HORIZONTAL CONTROL:
SHEET TITLE: IRRIGATION AS-BUILT DRAWINGS
PROJECT: MACARTHUR LAKE STORMWATER CAPTURE PROJECT
ADDRESS: MACARTHUR PARK 2230 6TH ST LOS ANGELES CA 90057

DEPARTMENT OF PUBLIC WORKS
NO | REVISIONS | DATE | BY
INDEX NO. D-XXXXX
CIP NO. 1920R004

CITY OF LOS ANGELES
DESIGN GROUP | DATE
ENGINEER:
ARCHITECT: KUSH PAREKH
DESIGNED BY: KUSH PAREKH
DRAWN BY: IAN MILLER, AILSA THAI
CHECKED BY:
APPROVED BY:

WORK ORDER
S33WMLRP, S043MSWC, S343MSWC

SHEET NAME
LI712
SHEET 44 OF 108 SHEETS

REVISION DATES (DESIGN STAGE ONLY)

THE CITY OF LOS ANGELES OR ITS OFFICERS OR AGENTS SHALL NOT BE RESPONSIBLE FOR THE ACCURACY OR COMPLETENESS OF ELECTRONIC COPIES OF THIS PLAN SHEET.

FINAL DESIGN SUBMITTAL

PLANTING NOTES

1. THE PLAN(S) ARE DIAGRAMMATIC. THE CONTRACTOR SHALL VERIFY EXISTING CONDITIONS AND NOTIFY THE PROJECT ENGINEER/LANDSCAPE ARCHITECT OF ANY DISCREPANCIES PRIOR TO THE START OF WORK.

2. CLEARING AND GRUBBING
THE CONTRACTOR SHALL CLEAR AND GRUB ALL IMPROVEMENT AREAS PRIOR TO THE INSTALLATION OF THE IRRIGATION SYSTEM. SEE SPECIFICATIONS.

3. TOPSOIL/SOILS REPORT
THE CONTRACTOR SHALL OBTAIN AN AGRICULTURAL SUITABILITY REPORT FOR THE ON-SITE SOIL. TAKE A MINIMUM OF 3 TEST SAMPLES AS DIRECTED BY THE ENGINEER, PRIOR TO THE INSTALLATION OF IRRIGATION AND PLANTING. THE RECOMMENDATIONS FOR SOIL AMENDMENTS FROM THE REPORT SHALL BE FOLLOWED IF THEY DIFFER FROM THE ONES GIVEN IN THESE PLANTING NOTES. IF IMPORTED SOIL IS REQUIRED, IT SHALL BE CLASS 'A' SOIL OBTAINED FROM A SOURCE DESIGNATED BY THE CONTRACTOR AND APPROVED BY THE CITY LANDSCAPE ARCHITECT. CONTRACTOR SHALL GUARANTEE THE QUALITY OF THE TOPSOIL WITH AN APPROVED AGRICULTURAL SUITABILITY EVALUATION REPORT. SUBMIT THE EVALUATION REPORT TO THE CONSTRUCTION MANAGER FOR APPROVAL 30 DAYS PRIOR TO ANY SOIL PLACEMENT.

4. PROTECTION OF EXISTING TREES
SEE RAP TREE PROTECTION SPECIFICATIONS, SHEET LS100.

5. WEED ABATEMENT
THE CONTRACTOR SHALL SUBMIT A WEED ABATEMENT PROGRAM TO RAP FORESTRY FOR APPROVAL 30 DAYS PRIOR TO THE START OF PLANTING OPERATIONS. NO PLANTING OPERATIONS WILL BE ALLOWED UNTIL ALL PLANTING AREAS ARE CLEARED OF WEEDS IN ACCORDANCE WITH THE WEED ABATEMENT PROGRAM AND TO THE SATISFACTION OF THE CITY ENGINEER/LANDSCAPE ARCHITECT. MAINTAIN ALL PLANTING AREAS FREE OF WEEDS FOR THE DURATION OF THE CONTRACT. CONTACT TYPE HERBICIDE MAY ONLY BE USED ON WRITTEN PERMISSION FROM RAP. SYSTEMIC HERBICIDES INCLUDING GLYPHOSATE ARE PROHIBITED.

6. PLANT LAYOUT
THE CONTRACTOR SHALL NOTIFY THE ENGINEER 48 HOURS PRIOR TO PLANTING OPERATIONS TO CONFIRM THE LOCATION OF PLANT MATERIALS. LOCATIONS AND QUANTITIES OF PLANT MATERIALS ON THE PLANS ARE APPROXIMATE AND ARE PROVIDED TO SHOW GENERAL INTENT. PLANT LOCATION ADJUSTMENTS SHALL BE PERFORMED BY THE CONTRACTOR AS DIRECTED BY ENGINEER AT NO ADDITIONAL COST TO THE CITY.

7. SOIL CONDITIONING
ALL PLANTING AREAS SHALL HAVE THE FOLLOWING AMENDMENTS TILLED INTO THE TOP 6" OF THE SOIL PER 1000 SQUARE FEET:

   A. THREE (3) CUBIC YARDS OF NITROGEN FORTIFIED WOOD COMPOST (TYPE 1 ORGANIC SOIL AMENDMENT).
   B. TWO (2) CUBIC YARDS OF ORGANIC FERTILIZER (TYPE 2 ORGANIC SOIL AMENDMENT)
   C. 100 POUNDS OF AGRICULTURAL GYPSUM
   D. 20 POUNDS OF 12-12-12 QUICK RELEASE COMMERCIAL FERTILIZER THESE QUANTITIES ARE FOR BID BASIS ONLY. REFER TO SOILS REPORTS FOR FINAL QUANTITIES (SEE SPECIFICATIONS).

8. BACKFILL MIX
ALL PLANTING HOLES, EXCLUDING PLANTING HOLES SMALLER THAN 1 GALLON SHALL HAVE THE FOLLOWING BACKFILL MIXTURE:

   70% EXISTING TOPSOIL
   30% NITROGEN FORTIFIED WOOD COMPOST (TYPE 1 ORGANIC SOIL AMENDMENT)
   (FOR AZALEAS, SUBSTITUTE 30% PEAT MOSS)
   2 POUNDS PER CUBIC YARD OF IRON SULFATE AND THE FOLLOWING AMOUNT OF PLANTING TABLETS:
   15 GAL. PLANT = FIVE (5)TABLETS
   5 GAL. PLANT = THREE (3) TABLETS
   1 GAL. PLANT = ONE (1) TABLET
   ONE(1) TABLET PER 4" BOX SIZE

9. MULCH
APPLY 3" THICK MIN. LAYER OF COMPOSTED GREEN WASTE MULCH SCREENED TO 1" MIN. - 4" MAX. SIZE TO ALL NON-TURF PLANTING AREAS AND TREE CIRCLES, PER BOE/RAP STANDARD PLANTING SPECIFICATIONS.

10. FERTILIZER
THE CONTRACTOR SHALL APPLY AN 8-8-4 COMMERCIAL SLOW RELEASE FERTILIZER TO ALL PLANTING AREAS AT A RATE OF 20 POUNDS PER 1000 SQUARE FEET UPON COMPLETION OF THE GROUND COVER PLANTING AND AT THIRTY DAY INTERVALS THEREAFTER UNTIL THE END OF THE PLANT ESTABLISHMENT PERIOD. THOROUGHLY WATER ALL PLANTING AREAS FOLLOWING THE APPLICATION OF THE FERTILIZER. ALL FERTILIZER APPLICATIONS SHALL BE PERFORMED UNDER INSPECTION BY A REPRESENTATIVE FROM THE BUREAU OF CONTRACT ADMINISTRATION.

11. PLANT REPLACEMENT
THE CONTRACTOR SHALL REPLACE AS SOON AS POSSIBLE, ANY PLANT THAT SHOWS SIGNS OF FAILURE TO GROW AT ANY TIME DURING THE CONTRACT PERIOD OR THOSE PLANTS THAT ARE INJURED OR SO DAMAGED AS TO RENDER THEM UNSUITABLE FOR THE PURPOSE INTENDED. PROVIDE REPLACEMENT PLANTS OF THE SAME TYPE AND SIZE, AND INSTALL THEM PER THE PLANTING SPECIFICATION.

12. PLANT ESTABLISHMENT PERIOD
UPON COMPLETION OF THE PLANT ESTABLISHMENT PERIOD, A FINAL INSPECTION FOR ACCEPTANCE MAY BE REQUESTED BY THE CONTRACTOR, AND WILL BE PERFORMED BY THE BCA INSPECTOR, ENGINEER AND A RAP AUTHORIZED REPRESENTATIVE. THE CONTRACTOR SHALL REQUEST FOR INSPECTION AT LEAST THREE (3) WORKING DAYS PRIOR TO THE ANTICIPATED DATE. FOR THIS INSPECTION, THE SITE MUST BE CLEAN OF ALL WEEDS, DEBRIS AND EXCESS MATERIAL. IF WORK FAILS TO PASS FINAL INSPECTION, ANY SUBSEQUENT INSPECTION MUST BE RESCHEDULED AS PER ABOVE, AND ADDITIONAL TIME WILL BE CHARGED TO THE CONTRACTOR.

13. RESTORATION OF DAMAGED AREAS
THE CONTRACTOR SHALL RESTORE ALL LANDSCAPED AREAS TO THEIR ORIGINAL CONDITION THAT ARE NOT SPECIFICALLY PROVIDED FOR BY THESE PLANS, BUT HAVE BEEN IMPACTED BY CONSTRUCTION. PROVIDE ALL NECESSARY MATERIAL, INCLUDING IRRIGATION EQUIPMENT, SOIL, SOIL AMENDMENTS, PLANTS OF THE SAME SPECIES, KINDS, AND SIZED, ETC. TO THE SATISFACTION OF THE CITY ENGINEER AND THE CITY LANDSCAPE ARCHITECT AT NO ADDITIONAL COST TO THE CITY.

   IN AREAS OF LAWN REPAIR USE THE FOLLOWING:
   TIFWAY II™ HYBRID BERMUDA (A 100% BLENDED HYBRID BERMUDA GRASS MIXTURE) OR EQUAL. DEEP GREEN COLOR, MEDIUM-FINE LEAF TEXTURE, COMPACT GROWTH HABIT, LOW SHADE TOLERANCE, EXCELLENT DISEASE AND WEAR RESISTANCE. REEL MOWER AT 1/2" TO 1-1/2".

14. INSPECTIONS
ALL WORK AND MATERIALS ARE SUBJECT TO INSPECTION AND APPROVAL IN ADDITION TO INSPECTIONS REQUIRED BY THE STANDARD PLANS SPECIFICATIONS. THE FOLLOWING INSPECTIONS ARE REQUIRED:

   -IRRIGATION SYSTEM PRESSURE TESTING
   -IRRIGATION COVERAGE TEST
   -IRRIGATION SYSTEM OPERATIONS TEST
   *TAGGING OF PLANT MATERIAL 15 GALLON AND LARGER AT THEIR SOURCE.
   *APPROVAL OF ALL PLANT MATERIAL AT THE SITE PRIOR TO PLANTING OPERATIONS.
   *CONFIRMATION AND APPROVAL OF PLANT MATERIAL LOCATION AND SPACING PRIOR TO PLANTING.
   *PRE-MAINTENANCE FINAL LANDSCAPE INSPECTION.
   *POST-MAINTENANCE FINAL LANDSCAPE INSPECTION.

15. RECYCLING
THE CONTRACTOR SHALL RECYCLE ON-OR OFF-SITE ALL VEGETATIVE WASTE (PER SECTION 12.43 OF LAMC).

PLANT SCHEDULE

SYMBOL	CODE	BOTANICAL / COMMON NAME	QTY	CONT	PLANT FACTOR	REGIONALITY
TREES						
	ACA STE	ACACIA STENOPHYLLA / SHOESTRING ACACIA MIN. 12' H X 5' W. SYMMETRICAL/MATCHING, STANDARD FORM	4	48" BOX	LOW / .3	AUSTRALIA
	TAB RLP	HANDROANTHUS HEPTAPHYLLUS / PINK TRUMPET TREE MIN. 12' H X 6' W. SYMMETRICAL/MATCHING, STANDARD FORM	3	48" BOX	MODERATE / .5	SOUTH AMERICA
	QUE TOM	QUERCUS TOMENTELLA / ISLAND OAK MIN. 12' H X 6' W. SYMMETRICAL/MATCHING, STANDARD FORM	3	48" BOX	LOW / .3	CALIFORNIA NATIVE
SHRUBS						
	AGA MGN	AGAVE ANGUSTIFOLIA 'MARGINATA' / VARIEGATED CARIBBEAN CENTURY PLANT MIN. 24" H X 24" W. SINGLE HEAD. SYMMETRICAL/MATCHING. SPECIMEN GRADE. WELL ROOTED. FULL CAN. NO STALK.	34	15 GAL	LOW	MEXICO
	BER ACM	BERBERIS AQUIFOLIUM 'COMPACTA' / COMPACT OREGON GRAPE MIN. 18" H X 18" W. SYMMETRICAL/MATCHING. WELL ROOTED. FULL CAN.	49	15 GAL	LOW	CALIFORNIA NATIVE
	DAS LON	DASYLIRION LONGISSIMUM / TOOTHLESS DESERT SPOON MIN. 24" H X 24" W. SINGLE HEAD. SYMMETRICAL/MATCHING. SPECIMEN GRADE. WELL ROOTED. FULL CAN. NO STALK.	63	15 GAL	LOW	MEXICO
	SAL PU3	SALVIA LEUCOPHYLLA / PURPLE SAGE MIN. 12" H X 12" W. SYMMETRICAL/MATCHING. WELL ROOTED. FULL CAN. FULL LEAVES TO THE BASE OF THE CONTAINER.	47	5 GAL	LOW	CALIFORNIA NATIVE
SYMBOL	CODE	BOTANICAL / COMMON NAME	QTY	CONT	PLANT FACTOR	REGIONALITY
GROUND COVERS						
	ANE CAL	ANEMOPSIS CALIFORNICA / YERBA MANSA MIN. 6" H X 12" W. MATCHING, WELL ROOTED. FULL CAN.	194 SF	1 GAL	HIGH	CALIFORNIA NATIVE
	CHO TCS	CHONDROPETALUM TECTORUM 'DWARF' / DWARF CAPE RUSH MIN. 9" H X 9" W. MATCHING, WELL ROOTED. FULL CAN.	456 SF	1 GAL	LOW	SOUTH AFRICA
	ELE MAC	ELEOCHARIS MACROSTACHYA / COMMON SPIKERUSH MIN. 9" H X 9" W. MATCHING, WELL ROOTED. FULL CAN.	333 SF	1 GAL	HIGH	CALIFORNIA NATIVE
	ERY CAR	ERYTHRANTHE CARDINALIS / SCARLET MONKEYFLOWER MIN. 9" H X 9" W. MATCHING, WELL ROOTED. FULL CAN.	243 SF	1 GAL	HIGH	CALIFORNIA NATIVE
	GRE COA	GREVILLEA LANIGERA 'COASTAL GEM' / COASTAL GEM GREVILLEA MIN. 9" H X 9" W. MATCHING, WELL ROOTED. FULL CAN.	252 SF	1 GAL	LOW	AUSTRALIA
	JUN PAT	JUNCUS PATENS / CALIFORNIA GRAY RUSH MIN. 12" H X 9" W. MATCHING, WELL ROOTED. FULL CAN.	380 SF	1 GAL	LOW	CALIFORNIA NATIVE
	LOB CAR	LOBELIA CARDINALIS / CARDINAL FLOWER MIN. 9" H X 9" W. MATCHING, WELL ROOTED. FULL CAN.	140 SF	1 GAL	HIGH	CALIFORNIA NATIVE
	LOM BRE	LOMANDRA LONGIFOLIA 'LM300' / BREEZE™ MAT RUSH MIN. 12" H X 9" W. MATCHING, WELL ROOTED. FULL CAN.	389 SF	1 GAL	LOW	AUSTRALIA

NOTES:

1. USE EARTHWORKS CUSTOM IMPORT WETLAND SOIL MIX AT ALL WETLAND PLANTING AREAS AS SHOWN IN CIVIL SHEET CB103.

2. FINAL AMENDMENTS TO TOPSOIL MIX TO BE CONFIRMED AFTER AGRONOMIC AND LAKE WATER QUALITY RESTING REPORTS ARE OBTAINED.

EarthWorks
SOIL AMENDMENTS, INC.

CUSTOM IMPORT WETLAND SOIL MIX (STPC)

EarthWorks offers a variety of mixes specifically formulated primarily for various planting conditions. This mix is made specifically for a wetland planting situation, where the plant material will be submersed in water most of the time. The sand based mix starts with a sandy loam topsoil, washed sized sand, vermiculite, and a high quality organic humus. The sandy loam and washed sand will help in giving structure to the mix. The pumice will provide aeration for oxygenation to the root zone. The vermiculite and compost help with balanced moisture retention and nutrients to the plant material. Organic nutrients and minerals are added to provide sustained plant health.
This mix is suitable where suitable drainage is desired.

PLANTING RECOMMENDATIONS:

Remove unfavorable existing soil and replace with EarthWorks Custom Import Wetland Soil Mix.

INGREDIENTS:

Sandy loam topsoil, washed sand, pea gravel and high quality organic humus (WCP33).

1725 Agua Mansa Road
Riverside, CA 92509
www.ewsa.com

(951) 782-0260
(888) SOIL 2 YOU
fax (951) 782-0268

FOR LADBS APPROVAL

carollo

ENGINEERING
CITY OF LOS ANGELES
Environmental Engineering Design

THIS PLAN WAS ELECTRONICALLY SIGNED AND STAMPED

LICENSED LANDSCAPE ARCHITECT
JAE DYER
5623
11-30-26
1-22-26
VENTURA
STATE OF CALIFORNIA

BUREAU OF ENGINEERING
VERTICAL CONTROL:
HORIZONTAL CONTROL:
SHEET TITLE: PLANTING NOTES & SCHEDULE
PROJECT: MACARTHUR LAKE STORMWATER CAPTURE PROJECT
ADDRESS: MACARTHUR PARK 2230 6TH ST LOS ANGELES CA 90057

DEPARTMENT OF PUBLIC WORKS
CITY OF LOS ANGELES

NO.	REVISIONS	DATE	BY

CIP NO. 1920R004
INDEX NO. D-XXXXX

DESIGN GROUP
ENGINEER:
ARCHITECT: KUSH PAREKH
DESIGNED BY: KUSH PAREKH
DRAWN BY: IAN MILLER, AILSA THAI
CHECKED BY:
APPROVED BY:
DATE

WORK ORDER
S33WMLRP, S043MSWC, S343MSWC

SHEET NAME
LP800
SHEET 45 OF 108 SHEETS

THE CITY OF LOS ANGELES OR ITS OFFICERS OR AGENTS SHALL NOT BE RESPONSIBLE FOR THE ACCURACY OR COMPLETENESS OF ELECTRONIC COPIES OF THIS PLAN SHEET.

REVISION DATES (DESIGN STAGE ONLY)

SHEET VERSION 4.0.1 FILE PATH: P:\MPR 2021 MACARTHUR PARK REHABILITATION\CAD\PROJECTWISE FILES\10 SHEETS\20213700LP800.DWG PLOT DATE: 1/21/2026 12:06 PM SAVED: 12/19/2025 11:58 AM SAVED BY:AILSA

FINAL DESIGN SUBMITTAL

PLANT SCHEDULE

SYMBOL	CODE	BOTANICAL / COMMON NAME
TREES		
	ACA STE	ACACIA STENOPHYLLA / SHOESTRING ACACIA MIN. 12' H X 5' W. SYMMETRICAL/MATCHING, STANDARD FORM
	TAB RLP	HANDROANTHUS HEPTAPHYLLUS / PINK TRUMPET TREE MIN. 12' H X 6' W. SYMMETRICAL/MATCHING, STANDARD FORM
	QUE TOM	QUERCUS TOMENTELLA / ISLAND OAK MIN. 12' H X 6' W. SYMMETRICAL/MATCHING, STANDARD FORM
SHRUBS		
	AGA MGN	AGAVE ANGUSTIFOLIA 'MARGINATA' / VARIEGATED CARIBBEAN CENTURY PLANT MIN. 24" H X 24" W. SINGLE HEAD. SYMMETRICAL/MATCHING. SPECIMEN GRADE. WELL ROOTED. FULL CAN. NO STALK.
	BER ACM	BERBERIS AQUIFOLIUM 'COMPACTA' / COMPACT OREGON GRAPE MIN. 18" H X 18" W. SYMMETRICAL/MATCHING. WELL ROOTED. FULL CAN.
	DAS LON	DASYLIRION LONGISSIMUM / TOOTHLESS DESERT SPOON MIN. 24" H X 24" W. SINGLE HEAD. SYMMETRICAL/MATCHING. SPECIMEN GRADE. WELL ROOTED. FULL CAN. NO STALK.
	SAL PU3	SALVIA LEUCOPHYLLA / PURPLE SAGE MIN. 12" H X 12" W. SYMMETRICAL/MATCHING. WELL ROOTED. FULL CAN. FULL LEAVES TO THE BASE OF THE CONTAINER.
SYMBOL	CODE	BOTANICAL / COMMON NAME
GROUND COVERS		
	ANE CAL	ANEMOPSIS CALIFORNICA / YERBA MANSA MIN. 6" H X 12" W. MATCHING, WELL ROOTED. FULL CAN.
	CHO TCS	CHONDROPETALUM TECTORUM 'DWARF' / DWARF CAPE RUSH MIN. 9" H X 9" W. MATCHING, WELL ROOTED. FULL CAN.
	ELE MAC	ELEOCHARIS MACROSTACHYA / COMMON SPIKERUSH MIN. 9" H X 9" W. MATCHING, WELL ROOTED. FULL CAN.
	ERY CAR	ERYTHRANTHE CARDINALIS / SCARLET MONKEYFLOWER MIN. 9" H X 9" W. MATCHING, WELL ROOTED. FULL CAN.
	GRE COA	GREVILLEA LANIGERA 'COASTAL GEM' / COASTAL GEM GREVILLEA MIN. 9" H X 9" W. MATCHING, WELL ROOTED. FULL CAN.
	JUN PAT	JUNCUS PATENS / CALIFORNIA GRAY RUSH MIN. 12" H X 9" W. MATCHING, WELL ROOTED. FULL CAN.
	LOB CAR	LOBELIA CARDINALIS / CARDINAL FLOWER MIN. 9" H X 9" W. MATCHING, WELL ROOTED. FULL CAN.
	LOM BRE	LOMANDRA LONGIFOLIA 'LM300' / BREEZE™ MAT RUSH MIN. 12" H X 9" W. MATCHING, WELL ROOTED. FULL CAN.

NOTES:

1. RESTORATION OF DAMAGED AREAS: THE CONTRACTOR SHALL RESTORE ALL LANDSCAPED AREAS TO THEIR ORIGINAL CONDITION THAT ARE NOT SPECIFICALLY PROVIDED FOR BY THESE PLANS, BUT HAVE BEEN IMPACTED BY CONSTRUCTION. PROVIDE ALL NECESSARY MATERIAL, INCLUDING IRRIGATION EQUIPMENT, SOIL, SOIL AMENDMENTS, PLANTS OF THE SAME SPECIES, KINDS, AND SIZED, ETC. TO THE SATISFACTION OF THE CITY ENGINEER AND THE CITY LANDSCAPE ARCHITECT AT NO ADDITIONAL COST TO THE CITY.

2. THE CONTRACTOR SHALL REPLACE SOD WHERE TURF HAS BEEN REMOVED FOR GRADING OR CONSTRUCTION. REPLACEMENT SOD SHOULD BE "BALLPARK BLEND" FROM AG SOD OR APPROVED EQUAL.

3. ALL HATCHED PLANTING AREAS TO BE PLANTED WITH TRIANGULAR SPACING. PLANT SYMBOLS TO BE PLANTED AS SHOWN.

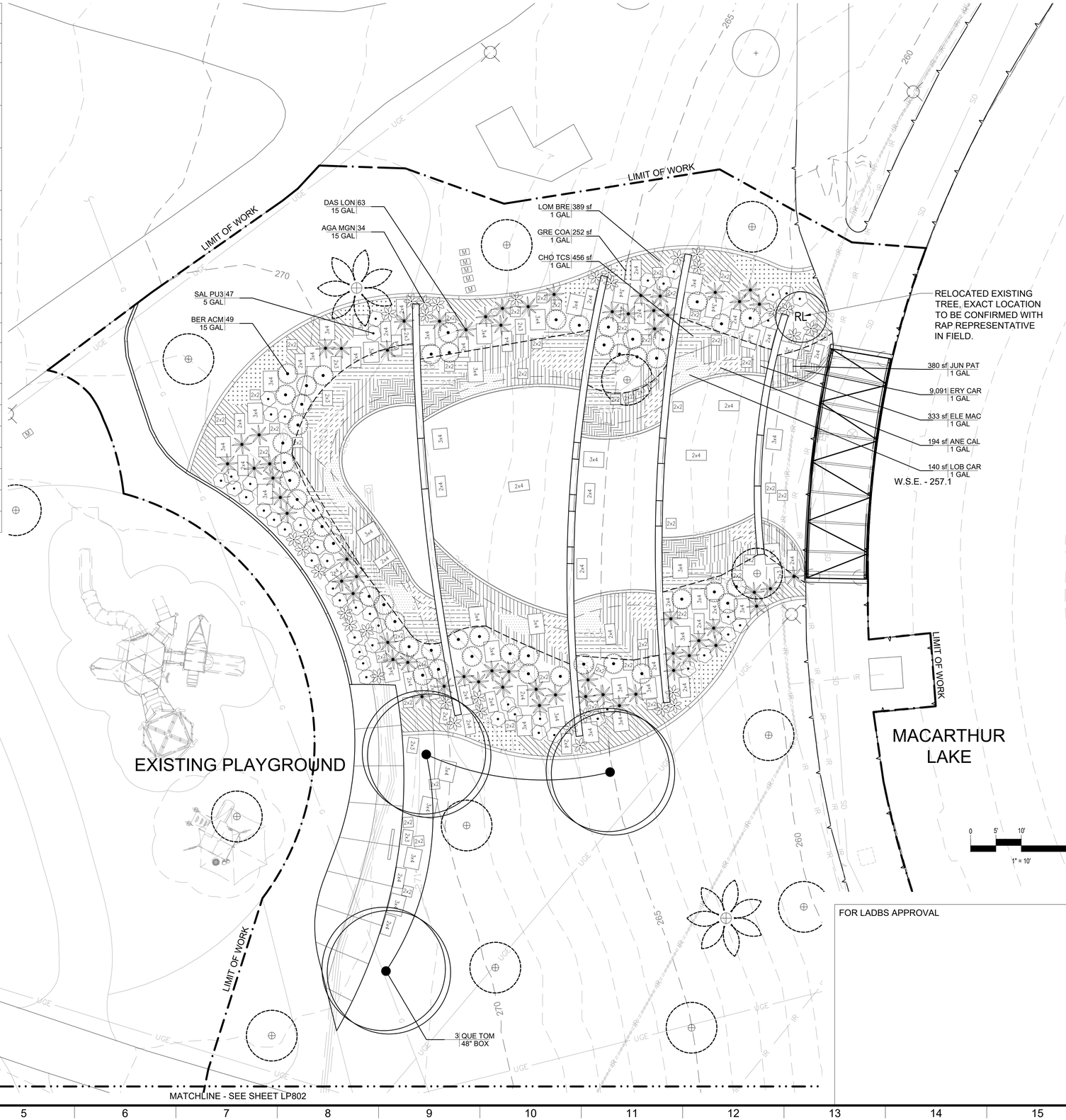

FOR LADBS APPROVAL

carollo

ENGINEERING
CITY OF LOS ANGELES
Environmental Engineering Division

THIS PLAN WAS ELECTRONICALLY SIGNED AND STAMPED

LICENSED LANDSCAPE ARCHITECT
JIN DYER
5623
11-30-26
11-22-26
STATE OF CALIFORNIA

BUREAU OF ENGINEERING
VERTICAL CONTROL:
HORIZONTAL CONTROL:
SHEET TITLE: PLANTING PLAN, SHEET 1
PROJECT: MACARTHUR LAKE STORMWATER CAPTURE PROJECT
ADDRESS: MACARTHUR PARK
2230 6TH ST LOS ANGELES CA 90057

NO.	REVISIONS	DATE	BY

CIP NO. 1920R004
INDEX NO. D-XXXXX

DEPARTMENT OF PUBLIC WORKS
CITY OF LOS ANGELES

DESIGN GROUP
DATE
ENGINEER:
ARCHITECT: KUSH PAREKH
DESIGNED BY: KUSH PAREKH
DRAWN BY: IAN MILLER, AILSA THAI
CHECKED BY:
APPROVED BY:

WORK ORDER
S33WMLRP, S043MSWC, S343MSWC

SHEET NAME
LP801
SHEET 46 OF 108 SHEETS

THE CITY OF LOS ANGELES OR ITS OFFICERS OR AGENTS SHALL NOT BE RESPONSIBLE FOR THE ACCURACY OR COMPLETENESS OF ELECTRONIC COPIES OF THIS PLAN SHEET.

REVISION DATES (DESIGN STAGE ONLY)

SHEET VERSION 4.0.1 FILE PATH: P:\MPR 2021 MACARTHUR PARK REHABILITATION\CAD\PROJECTWISE FILES\10 SHEETS\20213700LP801.DWG PLOT DATE: 1/21/2026 12:06 PM SAVED: 12/19/2025 11:59 AM SAVED BY:AILSA

FINAL DESIGN SUBMITTAL

PLANT SCHEDULE

SYMBOL	CODE	BOTANICAL / COMMON NAME
TREES		
	ACA STE	ACACIA STENOPHYLLA / SHOESTRING ACACIA MIN. 12' H X 5' W. SYMMETRICAL/MATCHING, STANDARD FORM
	TAB RLP	HANDROANTHUS HEPTAPHYLLUS / PINK TRUMPET TREE MIN. 12' H X 6' W. SYMMETRICAL/MATCHING, STANDARD FORM
	QUE TOM	QUERCUS TOMENTELLA / ISLAND OAK MIN. 12' H X 6' W. SYMMETRICAL/MATCHING, STANDARD FORM
SHRUBS		
	AGA MGN	AGAVE ANGUSTIFOLIA 'MARGINATA' / VARIEGATED CARIBBEAN CENTURY PLANT MIN. 24" H X 24" W. SINGLE HEAD. SYMMETRICAL/MATCHING. SPECIMEN GRADE. WELL ROOTED. FULL CAN. NO STALK.
	BER ACM	BERBERIS AQUIFOLIUM 'COMPACTA' / COMPACT OREGON GRAPE MIN. 18" H X 18" W. SYMMETRICAL/MATCHING. WELL ROOTED. FULL CAN.
	DAS LON	DASYLIRION LONGISSIMUM / TOOTHLESS DESERT SPOON MIN. 24" H X 24" W. SINGLE HEAD. SYMMETRICAL/MATCHING. SPECIMEN GRADE. WELL ROOTED. FULL CAN. NO STALK.
	SAL PU3	SALVIA LEUCOPHYLLA / PURPLE SAGE MIN. 12" H X 12" W. SYMMETRICAL/MATCHING. WELL ROOTED. FULL CAN. FULL LEAVES TO THE BASE OF THE CONTAINER.
SYMBOL	CODE	BOTANICAL / COMMON NAME
GROUND COVERS		
	ANE CAL	ANEMOPSIS CALIFORNICA / YERBA MANSA MIN. 6" H X 12" W. MATCHING, WELL ROOTED. FULL CAN.
	CHO TCS	CHONDROPETALUM TECTORUM 'DWARF' / DWARF CAPE RUSH MIN. 9" H X 9" W. MATCHING, WELL ROOTED. FULL CAN.
	ELE MAC	ELEOCHARIS MACROSTACHYA / COMMON SPIKERUSH MIN. 9" H X 9" W. MATCHING, WELL ROOTED. FULL CAN.
	ERY CAR	ERYTHRANTHE CARDINALIS / SCARLET MONKEYFLOWER MIN. 9" H X 9" W. MATCHING, WELL ROOTED. FULL CAN.
	GRE COA	GREVILLEA LANIGERA 'COASTAL GEM' / COASTAL GEM GREVILLEA MIN. 9" H X 9" W. MATCHING, WELL ROOTED. FULL CAN.
	JUN PAT	JUNCUS PATENS / CALIFORNIA GRAY RUSH MIN. 12" H X 9" W. MATCHING, WELL ROOTED. FULL CAN.
	LOB CAR	LOBELIA CARDINALIS / CARDINAL FLOWER MIN. 9" H X 9" W. MATCHING, WELL ROOTED. FULL CAN.
	LOM BRE	LOMANDRA LONGIFOLIA 'LM300' / BREEZE™ MAT RUSH MIN. 12" H X 9" W. MATCHING, WELL ROOTED. FULL CAN.

NOTES:

1. RESTORATION OF DAMAGED AREAS: THE CONTRACTOR SHALL RESTORE ALL LANDSCAPED AREAS TO THEIR ORIGINAL CONDITION THAT ARE NOT SPECIFICALLY PROVIDED FOR BY THESE PLANS, BUT HAVE BEEN IMPACTED BY CONSTRUCTION. PROVIDE ALL NECESSARY MATERIAL, INCLUDING IRRIGATION EQUIPMENT, SOIL, SOIL AMENDMENTS, PLANTS OF THE SAME SPECIES, KINDS, AND SIZED, ETC. TO THE SATISFACTION OF THE CITY ENGINEER AND THE CITY LANDSCAPE ARCHITECT AT NO ADDITIONAL COST TO THE CITY.

2. THE CONTRACTOR SHALL REPLACE SOD WHERE TURF HAS BEEN REMOVED FOR GRADING OR CONSTRUCTION.

3. ALL HATCHED PLANTING AREAS TO BE PLANTED WITH TRIANGULAR SPACING. PLANT SYMBOLS TO BE PLANTED AS SHOWN.

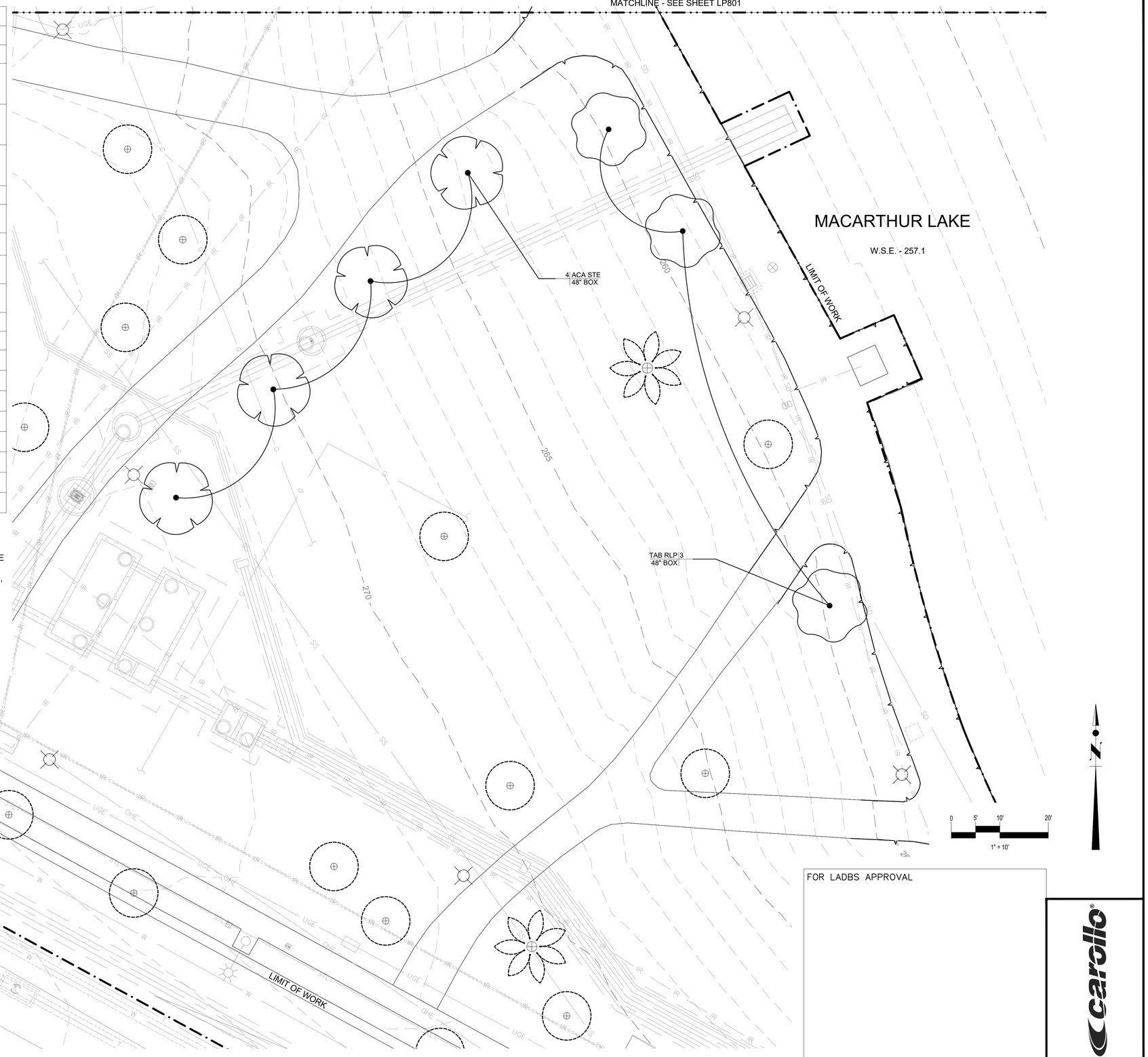

THE CITY OF LOS ANGELES OR ITS OFFICERS OR AGENTS SHALL NOT BE RESPONSIBLE FOR THE ACCURACY OR COMPLETENESS OF ELECTRONIC COPIES OF THIS PLAN SHEET.

REVISION DATES (DESIGN STAGE ONLY)

ENGINEERING
CITY OF LOS ANGELES
Environmental Engineering Division

• THIS PLAN WAS ELECTRONICALLY SIGNED AND STAMPED

LICENSED LANDSCAPE ARCHITECT
JAY DYER
5623
11-30-26
1-22-26
STATE OF CALIFORNIA

DEPARTMENT OF PUBLIC WORKS
CITY OF LOS ANGELES
BUREAU OF ENGINEERING

VERTICAL CONTROL:
HORIZONTAL CONTROL:
SHEET TITLE: PLANTING PLAN, SHEET 2
PROJECT: MACARTHUR LAKE STORMWATER CAPTURE PROJECT
ADDRESS: MACARTHUR PARK
2230 6TH ST LOS ANGELES CA 90057

NO.	REVISIONS	DATE	BY

CIP NO. 1920R004
INDEX NO. D-XXXXX

DESIGN GROUP
ENGINEER:
ARCHITECT: KUSH PAREKH
DESIGNED BY: KUSH PAREKH
DRAWN BY: IAN MILLER, AILSA THAI
CHECKED BY:
APPROVED BY:
DATE

WORK ORDER
S33WMLRP, S043MSWC, S343MSWC

SHEET NAME
LP802
SHEET 47 OF 108 SHEETS

carollo

SHEET VERSION 4.0.1 FILE PATH: P:\MPR 2021 MACARTHUR PARK REHABILITATION\CAD\PROJECTWISE FILES\10 SHEETS\20213700LP802.DWG PLOT DATE: 1/21/2026 12:07 PM SAVED: 12/19/2025 12:00 PM SAVED BY:AILSA

FINAL DESIGN SUBMITTAL

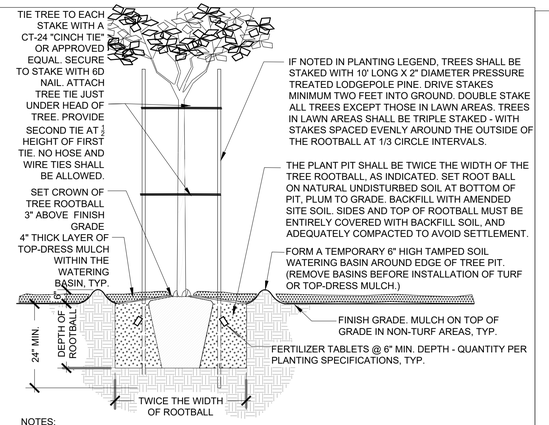

NOTES:
1. ALL TREES PLANTED IN LAWN AREAS SHALL HAVE A 48" DIAMETER UNPLANTED AREA AROUND EACH TREE TRUNK. INSTALL 4" TOP-DRESS MULCH INSIDE CIRCLE.
2. WHEN PLANTING TREES IN AREAS TO RECEIVE SOD, CONTRACTOR SHALL COMPENSATE FOR THE THICKNESS OF THE SOD AND SET TOP OF TREE ROOTBALL APPROPRIATELY TO AVOID A LOW AREA AND PONDING OF WATER.

3 TREE PLANTING AND STAKING
NTS | BOE VERSION DEC/19 | RP DETAIL L2000

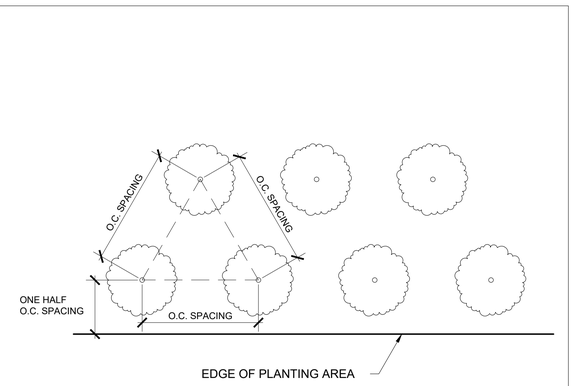

1 ON CENTER TRIANGULAR SPACING
N.T.S. | RP DETAIL 206

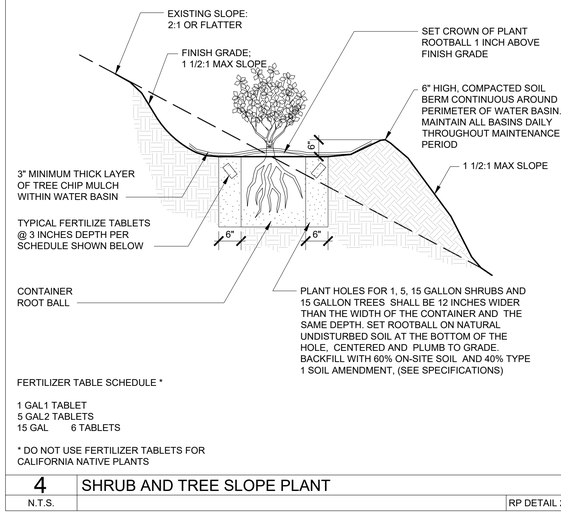

FERTILIZER TABLE SCHEDULE *

1 GAL1 TABLET
5 GAL2 TABLETS
15 GAL 6 TABLETS

* DO NOT USE FERTILIZER TABLETS FOR CALIFORNIA NATIVE PLANTS

4 SHRUB AND TREE SLOPE PLANT
N.T.S. | RP DETAIL 202

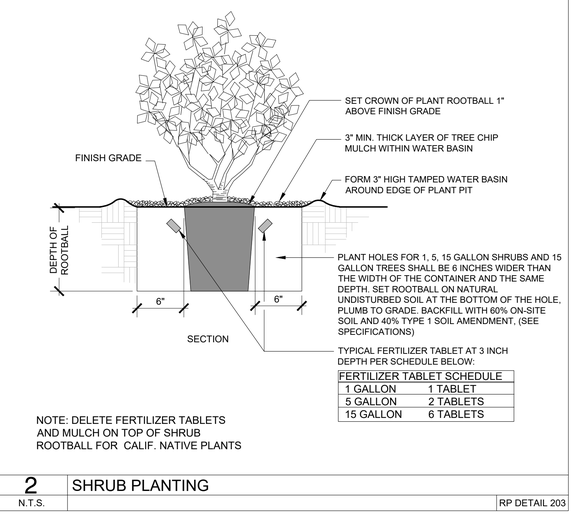

FERTILIZER TABLET SCHEDULE	
1 GALLON	1 TABLET
5 GALLON	2 TABLETS
15 GALLON	6 TABLETS

NOTE: DELETE FERTILIZER TABLETS AND MULCH ON TOP OF SHRUB ROOTBALL FOR CALIF. NATIVE PLANTS

2 SHRUB PLANTING
N.T.S. | RP DETAIL 203

FOR LADBS APPROVAL

carollo

ENGINEERING
CITY OF LOS ANGELES
Environmental Engineering Division

• THIS PLAN WAS ELECTRONICALLY SIGNED AND STAMPED •

LICENSED LANDSCAPE ARCHITECT
JAY DYER
5623
11-30-26
STATE OF CALIFORNIA

BUREAU OF ENGINEERING
VERTICAL CONTROL:
HORIZONTAL CONTROL:
SHEET TITLE: PLANTING DETAILS
PROJECT: MACARTHUR LAKE STORMWATER CAPTURE PROJECT
ADDRESS: MACARTHUR PARK 2230 6TH ST LOS ANGELES CA 90057

DEPARTMENT OF PUBLIC WORKS

NO	REVISIONS	DATE	BY

CIP NO. 1920R004

INDEX NO. D-XXXXX

CITY OF LOS ANGELES
DESIGN GROUP
ENGINEER:
ARCHITECT: KUSH PAREKH
DESIGNED BY: KUSH PAREKH
DRAWN BY: IAN MILLER, AILSA THAI
CHECKED BY:
APPROVED BY:
DATE

WORK ORDER
S33WMLRP, S043MSWC, S343MSWC

SHEET NAME
LP810
SHEET 48 OF 108 SHEETS

THE CITY OF LOS ANGELES OR ITS OFFICERS OR AGENTS SHALL NOT BE RESPONSIBLE FOR THE ACCURACY OR COMPLETENESS OF ELECTRONIC COPIES OF THIS PLAN SHEET.

REVISION DATES (DESIGN STAGE ONLY)

FINAL DESIGN SUBMITTAL

GENERAL NOTES:

1. USE STRUCTURAL DRAWINGS IN CONJUNCTION WITH PROJECT DRAWINGS BY OTHER DISCIPLINES AND WITH THE SPECIFICATIONS.
2. UNLESS DETAILED, SPECIFIED, OR INDICATED OTHERWISE, CONSTRUCTION SHALL BE AS INDICATED IN THE GENERAL NOTES AND TYPICAL DETAILS.
3. PRESENTATION CONVENTIONS FOR STRUCTURAL DRAWINGS:
   - A. SCREENED LINE WORK INDICATES EXISTING CONDITIONS.
   - B. WRITTEN DIMENSIONS TAKE PRECEDENCE OVER SCALED SIZES.
   - C. PLANS ARE TREATED AS HORIZONTAL SECTIONS. (I.E.: "PLAN AT ELEVATION 110" SHOWS CONSTRUCTION AT AND BELOW ELEVATION 110.)
4. VERIFY DIMENSIONS AND CONDITIONS BEFORE BEGINNING WORK. ADVISE ENGINEER IMMEDIATELY OF DISCREPANCIES BETWEEN EXISTING CONDITIONS AND DIMENSIONS, AND INFORMATION SHOWN ON THESE DRAWINGS. CONFIRM THE FOLLOWING BEFORE PREPARATION AND SUBMITTAL OF SHOP DRAWINGS:
   - A. DIMENSIONS AND WEIGHTS FOR EQUIPMENT SELECTED.
   - B. SIZES AND LOCATIONS OF EQUIPMENT PADS FOR EQUIPMENT SELECTED.
5. TYPICAL DETAILS ARE INCLUDED ON THE "SG" DRAWINGS.
   - A. TYPICAL DETAILS ARE INTENDED TO APPLY AT LOCATIONS DESCRIBED BY THEIR TITLES, EVEN WHEN NOT SPECIFICALLY REFERENCED ON THE DRAWINGS.
   - B. IN STRUCTURAL TYPICAL DETAILS, ORIENTATION OF BARS IN EACH MAT OF REINFORCEMENT (WHETHER "LINES" OR "DOTS"ARE CLOSER TO THE FACE OF THE CONCRETE) IS GENERALLY ARBITRARY. SEE DRAWINGS OF EACH STRUCTURE FOR ORIENTATION REQUIRED AT THAT STRUCTURE.
6. SEE CIVIL DRAWINGS FOR STRUCTURE COORDINATES. POINTS ON THE STRUCTURES TO WHICH SITE COORDINATES REFER ARE SHOWN ON THE STRUCTURAL PLANS.
7. DRAWINGS PREPARED BY OTHER DISCIPLINES INCLUDE OPENINGS, ANCHORS, PIPES, CONDUITS, AND OTHER ITEMS THAT ARE EMBEDDED INTO OR PASS THROUGH STRUCTURES.
   - A. CONFIRM SIZE AND LOCATIONS OF OPENINGS, PENETRATIONS AND EMBEDMENT FOR ITEMS AND EQUIPMENT FURNISHED.
   - B. IN GENERAL, OPENINGS, EMBEDMENTS, AND PENETRATIONS LESS THAN 12 INCHES IN DIAMETER ARE NOT SHOWN ON THE STRUCTURAL DRAWINGS.
   - C. SEE MECHANICAL DRAWINGS FOR DETAILS OF PIPE PENETRATIONS, PIPE SUPPORTS, AND ASSOCIATED STRUCTURAL REQUIREMENTS.
   - D. SEE MECHANICAL DRAWINGS FOR EQUIPMENT PADS AND PIPE SUPPORTS.

STRUCTURAL DESIGN CRITERIA - GENERAL:

SEE DRAWINGS OF INDIVIDUAL STRUCTURES FOR SPECIFIC DESIGN CRITERIA BASED ON THESE OVERALL CRITERIA FOR THE SITE.

1. BUILDING CODE:
   - A. 2022 CALIFORNIA BUILDING CODE (CBC 2022).
   - B. LOCAL AMENDMENTS: CITY OF LOS ANGELES, CA.
2. STRUCTURE RISK CATEGORY: III.
3. DEAD LOADS: CALCULATED FOR STRUCTURE SELF-WEIGHT.
4. LIVE LOADS: SEE PLANS
5. FLUID PRESSURE LOADS: 63 PSF/FT (UNO).
6. WIND DESIGN DATA:
   - A. SPECIAL WIND REGION: NO
   - B. WIND-BORNE DEBRIS REGION: NO
   - C. BASIC WIND SPEED (3 SEC GUST, 33 FEET ABOVE GROUND): 101 MPH.
7. EARTHQUAKE DESIGN DATA:

		0.2 SECOND	*1.0 SECOND
A.	SITE CLASS: D.		
B.	MAPPED SPECTRAL RESPONSE ACCELERATIONS:	Ss = 1.98 g	S1 = 0.70 g
C.	SITE COEFFICIENTS:	Fa = 1.0	Fv = 1.7
D.	MAXIMUM CONSIDERED ACCELERATIONS:*	Sms = 1.98 g	Sm1 = 1.20 g
E.	DESIGN SPECTRAL RESPONSE ACCELERATIONS:* (* 5% DAMPED)	Sds = 1.32 g	Sd1 = 0.80 g

8. FLOOD LOADS:
   - A. FLOOD HAZARD AREA: YES
     1) REFERENCE MAP ("FIRM"): 06037C1617G
     2) COASTAL HAZARD ZONE: A
9. RAIN LOADS:
   - A. DESIGN RAINFALL INTENSITY: i = 1.7 INCHES / HOUR. (100 YEAR/1 HOUR EVENT)
10. CONSTRUCTION LOADS:
    STRUCTURES HAVE BEEN DESIGNED FOR OPERATING LOADS ON COMPLETED FACILITIES. UNTIL CONSTRUCTION IS COMPLETE AND MEMBERS HAVE ACHIEVED THEIR DESIGN STRENGTH, PROTECT STRUCTURES AS REQUIRED BY SHORING, BRACING, AND BALANCING.

GEOTECHNICAL REPORT / FOUNDATION DESIGN CRITERIA:

1. GEOTECHNICAL INVESTIGATION REPORT:

   TITLE: MACARTHUR LAKE REHABILITATION PROJECT SAFE CLEAN WATER PROGRAM.
   PREPARED BY: NINYO & MOORE.
   REPORT NO: 211019003 DATED: JULY 29, 2022.
2. FOUNDATION DESIGNS ARE BASED ON RECOMMENDATIONS IN THE GEOTECHNICAL INVESTIGATION REPORT.
   - A. NET ALLOWABLE BEARING PRESSURE 2000 PSF @ 2'-0".
   - B. LATERAL EARTH PRESSURE (UNO):
     SURCHARGE: EQUIVALENT TO 2 FEET OF SOIL ABOVE FINISHED GRADE.

	STATIC	SEISMIC
ACTIVE (PSF/FT):	37	29
AT REST (PSF/FT):	56	29
PASSIVE (PSF/FT):	300	300
SLIDING COEFFICIENT OF FRICTION:	0.30	0.30

   - C. GROUNDWATER EL VARIES.

TYPICAL STRUCTURAL MATERIALS:

1. MATERIALS SHALL CONFORM TO THE FOLLOWING REQUIREMENTS UNLESS OTHERWISE INDICATED ON THE DRAWINGS.
2. SEE PROJECT SPECIFICATIONS AND NOTES ON DRAWINGS OF SPECIFIC STRUCTURES FOR DETAILED AND LOCATION-SPECIFIC REQUIREMENTS.

REINFORCING STEEL:

1. DEFORMED BARS:
   - A. TYPICAL: ASTM A 615, GRADE 60.
   - B. WHERE INDICATED ON THE DRAWINGS: ASTM A 706.
2. WELDED WIRE FABRIC: ASTM A 1064.

CONCRETE:

1. NORMAL DENSITY.
2. MINIMUM SPECIFIED CONCRETE COMPRESSIVE STRENGTH, f'c (AT 28 DAYS UNO).
   - A. STRUCTURES: f'c = 4500 PSI.
   - B. FILL AND THRUST BLOCKS: f'c = 2500 PSI.
   - C. PIPE ENCASEMENT: f'c = 2500 PSI.
   - D. ELECTRICAL DUCT ENCASEMENT: f'c = 2500 PSI.
   - E. PRECAST AND PRECAST-PRESTRESSED MEMBERS: f'c = 5000 PSI.

STRUCTURAL STEEL:

1. SECTIONS
   - A. SHAPES W, WT: ASTM A 992 (Fy = 50 KSI)
   - B. SHAPES S, ST, M, MT, HP, C, MC, L: ASTM A 36 (Fy = 36 KSI)
   - C. PLATES AND BARS: ASTM A 36 (Fy = 36 KSI)
   - D. PIPES: ASTM A 53, GRADE B (Fy = 35 KSI)
   - E. HOLLOW STRUCTURAL SECTIONS:
     ROUND: ASTM A 500, GRADE B (Fy = 42 KSI)
     SQUARE AND RECTANGULAR: ASTM A 500, GRADE B (Fy = 46 KSI)
2. CONNECTIONS:
   - A. BOLTS - STEEL TO-STEEL:
     ASTM F 3125 GRADE A325 HIGH-STRENGTH BOLTS, WITH LOAD INDICATOR WASHERS.
   - B. BOLTS - STEEL TO CONCRETE OR MASONRY:
     ANCHOR BOLTS WITH HEX FORGED HEAD.
     ASTM F 593, STAINLESS TYPE 316 (304)
     ASTM F 1554, GRADE 36 GALVANIZED.
   - C. WELDS - SHIELDED METAL ARC PROCESS USING E70-XX ELECTRODES.

STAINLESS STEEL:

1. ANSI TYPE 316/316L EXCEPT WHERE TYPE 304/304L IS INDICATED ON THE DRAWINGS.
2. SECTIONS: SHAPES AND BARS: ASTM A 276.
3. BOLTED CONNECTIONS - BOLTS AND ANCHOR BOLTS:
   - A. MATCH ALLOY OF THE STRUCTURAL MEMBERS CONNECTED.
   - B. TYPE 316/316L: ASTM F 593, GRADE B8M, CLASS 1, HEAVY HEX.
   - C. TYPE 304/304L: ASTM F 593, GRADE B8, CLASS 1, HEAVY HEX.
4. WELDED CONNECTIONS:
   - A. TYPE 316L: E316L-15 ELECTRODES.
   - B. TYPE 304L: E304L-15 ELECTRODES.

STRUCTURAL ALUMINUM:

1. SECTIONS
   - A. SHAPES: ASTM B 308, ALLOY 6061-T6.
   - B. SHEET AND PLATE: ASTM B 209, ALLOY 6061-T6.
2. BOLTED CONNECTIONS - BOLTS AND ANCHOR BOLTS:
   - A. STAINLESS STEEL - TYPE 316, ASTM F 593, GRADE B8M, CLASS 1, HEAVY HEX.
3. WELDED CONNECTIONS:
   - A. GAS METAL ARC (MIG) OR GAS TUNGSTEN ARC (TIG) PROCESS USING FILLER ALLOY 4043 ELECTRODES.

CONSTRUCTION:

CONFORM TO THE FOLLOWING REQUIREMENTS UNLESS OTHERWISE INDICATED ON THE DRAWINGS.

EXCAVATION AND BACKFILLING:

1. EXPOSE AND PREPARE SUBGRADE AS SHOWN ON THE DRAWINGS AND SPECIFIED. OBTAIN ENGINEER'S OBSERVATION OF SUBGRADE SURFACES, AS EXPOSED AND AS PREPARED, BEFORE PROCEEDING WITH FOUNDATION CONSTRUCTION.
2. DO NOT PLACE BACKFILL AGAINST WALLS UNTIL STRUCTURES SUPPORTING THE TOP OF THE WALL ARE IN PLACE, ARE COMPLETE, AND (IN THE CASE OF CONCRETE) HAVE CURED TO THEIR MINIMUM SPECIFIED 28-DAY COMPRESSIVE STRENGTH.
3. WHERE BACKFILL MUST BE PLACED AGAINST WALLS BEFORE STRUCTURES ABOVE ARE COMPLETE, PROVIDE BRACING FOR WALLS. KEEP BRACING IN PLACE UNTIL THE STRUCTURE ABOVE IS COMPLETE AND (IN THE CASE OF CONCRETE) HAS CURED TO ITS MINIMUM SPECIFIED 28-DAY COMPRESSIVE STRENGTH.

CONCRETE:

1. SEE DETAIL 1 ON DRAWING SG-02 FOR CONCRETE NOTES, INCLUDING CLEAR COVER AND LAP SPLICE LENGTH REQUIREMENTS FOR REINFORCING.
2. SUBMIT LOCATIONS OF CONSTRUCTION JOINTS NOT SHOWN ON THE DRAWINGS FOR ACCEPTANCE BY THE ENGINEER BEFORE FORM LAYOUT.
3. PROVIDE 3/4-INCH CHAMFER AT EXPOSED EDGES OF CAST-IN-PLACE CONCRETE.
4. PROVIDE REINFORCING:
   - A. AT CORNERS AND JUNCTIONS - AS INDICATED IN DETAIL 6 ON DRAWING SG-02, SUPPLEMENT WITH ADDED BARS WHERE INDICATED ON THE DRAWINGS.
   - B. AT OPENINGS - AS INDICATED IN DETAIL 8 ON DRAWING SG-03.
5. WELDING OF REINFORCING IS NOT PERMITTED UNLESS DETAILED ON THE DRAWINGS OR ACCEPTED IN ADVANCE BY THE ENGINEER.
6. MAINTAIN MINIMUM 3 INCHES CLEAR CONCRETE COVER BETWEEN REINFORCING AND EMBEDMENTS.
7. FINISH CONCRETE AS SPECIFIED IN SECTION 03300.

STEEL, STAINLESS STEEL, AND ALUMINUM - CONNECTIONS:

1. BOLTED:
   - A. MADE USING 3/4-INCH DIAMETER BOLTS.
   - B. HAVING A MINIMUM OF 2 BOLTS, SPACED NOT CLOSER THAN 3 INCHES ON CENTER.
   - C. WITH A DISTANCE OF AT LEAST 1 1/2 INCHES FROM CENTER OF BOLT TO ANY EDGE OF A PLATE OR STRUCTURAL ELEMENT.
2. WELDED:
   - A. FILLET WELDS: PER AWS CODE BASED ON THE THICKNESS OF THE MATERIALS BEING JOINED, AND FULL LENGTH OF THE JOINT.
3. INTERFACE BETWEEN MATERIALS:
   - A. AT BOLTED CONNECTIONS THAT INCLUDE DIFFERENT METALS (E.G.: STEEL AND STAINLESS STEEL, OR ALUMINUM AND STEEL) PROVIDE ISOLATING SLEEVES AND WASHERS.
   - B. WHERE ALUMINUM IS IN CONTACT WITH CONCRETE, COAT ALUMINUM SURFACES AS SPECIFIED IN SECTION 09800.
4. POST-INSTALLED ANCHORS IN CONCRETE:
   - A. INSTALL IN FULL COMPLIANCE WITH ACCEPTED BUILDING CODE EVALUATION REPORT AND MANUFACTURER'S INSTRUCTIONS.
   - B. DO NOT CUT, DAMAGE, OR INTERRUPT EXISTING REINFORCEMENT TO INSTALL ANCHORS. USE NON-DESTRUCTIVE TESTING EQUIPMENT TO IDENTIFY LOCATIONS OF REINFORCEMENT IN MEMBERS BEFORE DRILLING HOLES FOR ANCHORS.

METAL FABRICATIONS:

1. HANDRAILS AND GUARDRAILS:
   - A. ALUMINUM, EXCEPT WHERE OTHER MATERIALS ARE NOTED.
2. GRATING:
   - A. ALUMINUM WITH TYPE 316 STAINLESS STEEL FASTENERS, UNLESS OTHERWISE NOTED.
   - B. GRATING AND ITS SEATS OR SUPPORTS SHALL BE OF THE SAME MATERIAL.
   - C. UNLESS INDICATED ON THE DRAWINGS AS "REMOVABLE GRATING", SECURELY FASTEN GRATING TO SUPPORTS.
3. COVER PLATES:
   - A. ALUMINUM WITH TYPE 316 STAINLESS STEEL FASTENERS, UNLESS OTHERWISE NOTED.
   - B. COVER PLATE AND ITS SEATS OR SUPPORTS SHALL BE OF THE SAME MATERIAL.

SPECIAL INSPECTION:

1. SPECIAL INSPECTION IS REQUIRED FOR THE FOLLOWING STRUCTURAL MATERIALS AND CONSTRUCTION.
2. DIVISION 2 SITE CONSTRUCTION (EARTHWORK)
   - A. EXCAVATION DEPTH.
   - B. ADEQUACY OF EXPOSED SURFACE TO PROVIDE REQUIRED SUPPORT.
   - C. PREPARATION OF SOILS/SURFACES SUPPORTING CONSTRUCTION.
   - D. FILL AND BACKFILL.
   - E. DEEP FOUNDATIONS - PILES DRILLED PIERS.
3. DIVISION 3 CONCRETE:
   - A. LOCATIONS.
   - B. FORMWORK AND MEMBER SIZES.
   - C. REINFORCING STEEL.
   - D. ANCHORS: CAST-IN AND POST-INSTALLED.
   - E. CONCRETE MIX AND PLACEMENT.
   - F. PROTECTION AND CURING PROCEDURES.
   - G. PRECAST CONCRETE.
5. DIVISION 5 METALS
   - A. GENERAL ALL METALS:
     1) MEMBER LOCATIONS.
     2) MEMBER SIZES/TYPES.
     3) ANCHORS - CAST-IN AND BUILT-IN ANCHOR BOLTS.
     4) ANCHORS - POST-INSTALLED MECHANICAL AND ADHESIVE.
   - B. STRUCTURAL STEEL (CARBON AND STAINLESS).
     1) HIGH-STRENGTH BOLTING.
     2) WELDING.
   - C. STRUCTURAL ALUMINUM.
     1) BOLTING.
     2) WELDING.

STRUCTURAL SYMBOLS:

1. SEE DRAWING GI04 FOR KEY TO DRAWING TITLES AND SECTION CUTS, AND FOR DEFINITION OF MATERIALS SHADING PATTERNS.
2. WELDING: SYMBOLS: IN ACCORDANCE WITH AMERICAN WELDING SOCIETY (AWS) A2.4.

STRUCTURAL ABBREVIATIONS:

1. SEE DRAWING GI03 FOR GENERAL LIST OF ABBREVIATIONS USED ON DRAWINGS.
2. ABBREVIATIONS FOR NAMES OF TECHNICAL GROUPS MAY BE FOUND IN THE PROJECT SPECIFICATIONS.
3. STRUCTURAL MEMBERS:
   - A. STEEL: ABBREVIATIONS AND DESIGNATIONS ARE IN ACCORDANCE WITH THE AMERICAN INSTITUTE OF STEEL CONSTRUCTION'S STEEL CONSTRUCTION MANUAL, CURRENT EDITION.
   - B. ALUMINUM: ABBREVIATIONS AND DESIGNATIONS ARE IN ACCORDANCE WITH THE ALUMINUM ASSOCIATION'S ALUMINUM DESIGN MANUAL, CURRENT EDITION.

DEFERRED DESIGN SUBMITTALS

AS DEFINED IN THE BUILDING CODE, DEFERRED DESIGN SUBMITTALS ARE PORTIONS OF THE DESIGN THAT ARE NOT SUBMITTED AT THE TIME OF PERMIT APPLICATION, AND THAT ARE TO BE REVIEWED BY THE REGISTERED DESIGN PROFESSIONAL AND SUBSEQUENTLY SUBMITTED TO THE BUILDING OFFICIAL.

DEFERRED DESIGN SUBMITTALS FOR THIS PROJECT INCLUDE:

1. DIVISION 2 SITE WORK.
   - A. 02839 - PREFABRICATED HALF THROUGH TRUSS PEDESTRIAN BRIDGE.
2. DIVISION 5 METALS.
   - A. 05500 - HANDRAILS AND GUARDRAILS.

THE CITY OF LOS ANGELES OR ITS OFFICERS OR AGENTS SHALL NOT BE RESPONSIBLE FOR THE ACCURACY OR COMPLETENESS OF ELECTRONIC COPIES OF THIS PLAN SHEET.

REVISION DATES (DESIGN STAGE ONLY)

ENGINEERING
CITY OF LOS ANGELES
Environmental Engineering Division

THIS PLAN WAS ELECTRONICALLY SIGNED AND STAMPED

REGISTERED PROFESSIONAL ENGINEER VINCENT M. DUOSE No. 69495 CIVIL STATE OF CALIFORNIA

BUREAU OF ENGINEERING
VERTICAL CONTROL:
HORIZONTAL CONTROL:
SHEET TITLE: GENERAL STRUCTURAL NOTES
PROJECT: MACARTHUR LAKE STORMWATER CAPTURE PROJECT
ADDRESS: MACARTHUR PARK 2230 6TH ST LOS ANGELES CA 90057

DEPARTMENT OF PUBLIC WORKS

NO.	REVISIONS	DATE	BY

CIP NO. 1920R004
INDEX NO. D-XXXXX

CITY OF LOS ANGELES

DESIGN GROUP	DATE
ENGINEER: CAROLLO ENGINEERS	09/27/2023
ARCHITECT:	09/27/2023
DESIGNED BY: CAROLLO ENGINEERS	09/27/2023
DRAWN BY: CAROLLO ENGINEERS	03/14/2024
CHECKED BY: KWASI DUOSE	07/16/2024
APPROVED BY: KWASI DUOSE	

WORK ORDER
S33WMLRP, S043MSWC, S343MSWC

SHEET NAME
SG001
SHEET 49 OF 108 SHEETS

carollo

FINAL DESIGN SUBMITTAL

1. SEE DIVISION 03 SPECIFICATION FOR REQUIREMENTS FOR CONCRETE CONSTRUCTION.
2. UNLESS OTHERWISE INDICATED ON THE DRAWINGS, MINIMUM REINFORCEMENT OF CONCRETE WALLS OR SLABS SHALL BE AS FOLLOWS. CONTACT ENGINEER FOR LOCATIONS INSIDE CONCRETE.
   10" THICK OR LESS: .....#5 @ 12" EACH WAY.
   MORE THAN 10" THICK: .....#5 @ 12" EACH WAY, EACH FACE.
3. WALL REINFORCEMENT AT CORNERS OR JUNCTIONS OF WALLS SHALL BE CONTINUOUS, LAP SPLICED, OR TERMINATED IN AN ACI STANDARD 90 DEGREE HOOK. SEE DETAIL 3 ON DRAWING SG002.
4. UNLESS OTHERWISE INDICATED ON THE DRAWINGS, DOWELS BETWEEN ADJACENT CONCRETE PLACEMENTS SHALL BE THE SAME SIZE AND SPACING AS THE REINFORCEMENT WHICH IS SPLICED TO THE DOWELS.
5. SLAB, BEAM AND COLUMN REINFORCING BARS SHALL HAVE A MINIMUM EXTENSION OR ANCHORAGE INTO SUPPORTS IN ACCORDANCE WITH ACI 318 AND ACI 350.
6. PROVIDE STIRRUP SUPPORT BARS SHALL BE TO SECURE TOP BARS AGAINST DISPLACEMENT AS REQUIRED.
7. UNLESS OTHERWISE INDICATED ON THE DRAWINGS, CONCRETE COVER OVER #11 AND SMALLER REINFORCING BARS SHALL BE AS FOLLOWS:

A. SLABS AND JOISTS:
   FORMED CONCRETE SURFACES AND UNFORMED TOP SURFACES FOR DRY CONDITIONS
   #7 BARS AND SMALLER.....1"
   #8 BARS AND LARGER.....1 1/2"
   FORMED CONCRETE SURFACES AND UNFORMED TOP SURFACES EXPOSED TO WEATHER, IN CONTACT WITH SOIL OR FLUIDS, OR LOCATED OVER FLUIDS.....2"

B. BEAMS AND COLUMNS:
   FORMED CONCRETE SURFACES FOR DRY CONDITIONS:
   STIRRUPS, SPIRALS, AND TIES.....1 1/2"
   PRINCIPAL REINFORCEMENT.....2"
   FORMED CONCRETE SURFACES EXPOSED TO WEATHER, IN CONTACT WITH SOIL OR FLUIDS, OR IN BEAMS LOCATED OVER FLUIDS:
   STIRRUPS AND TIES.....2"
   PRINCIPAL REINFORCEMENT.....2 1/2"

C. WALLS:
   FORMED CONCRETE SURFACES FOR DRY CONDITIONS:
   #7 BARS AND SMALLER.....1"
   #8 BARS AND LARGER.....1 1/2"
   FORMED CONCRETE SURFACES EXPOSED TO WEATHER, OR IN CONTACT WITH SOIL OR FLUIDS.....2"

D. FOOTINGS AND SLABS ON GRADE:
   FORMED VERTICAL CONCRETE SURFACES.....2"
   AT UNFORMED CONCRETE SURFACES CAST AGAINST SOIL, ROCK, OR CONCRETE WORK MATS.....3"
   TOP SURFACE OF FOOTINGS AND SLABS.....SAME AS SLABS

8. WATERSTOPS:
   A. PROVIDE WATERSTOPS AT JOINTS IN SLABS AND WALLS OF LIQUID-CONTAINING STRUCTURES, AND PORTIONS OF STRUCTURES BELOW THE DESIGN GROUNDWATER LEVEL. MAKE WATERSTOPS CONTINUOUS THROUGH STRUCTURE, SPLICING WATERSTOPS IN SLABS WITH WATERSTOPS IN WALLS.
   B. END WATERSTOPS 3" BELOW TOP OF WALLS. WHERE TOP OF WALL IS COVERED BY A SLAB WITHOUT WATERSTOPS, CONTINUE WATERSTOP TO WALL/SLAB JOINT. WHERE TOP OF WALL IS COVERED BY A SLAB WITH WATERSTOPS, MAKE WATERSTOPS CONTINUOUS, SPLICING WATERSTOPS IN WALLS WITH WATERSTOPS IN SLAB.
9. CURE CONCRETE IN ACCORDANCE WITH THE CONTRACT DOCUMENTS. WHERE WATER CURING IS SPECIFIED, MEMBRANE CURING IS NOT ALLOWED.
   A. THE CONTRACTOR IS WARNED THAT WATER CURING IS DIFFICULT AT TIMES DUE TO WIND AND DRY CONDITIONS. STUDY SPECIFICATION REQUIREMENTS AND FURNISH ADEQUATE SYSTEMS TO PROVIDE WATER CURING WHERE REQUIRED.
   B. KEEP WATER CURED SURFACES VISIBLY MOIST AT ALL TIMES. FLOOD TOPS OF WALLS NOT LESS THEN 3 TIMES DAILY.
10. DO NOT PLACE BACKFILL AGAINST WALLS UNTIL:
   A. WALLS HAVE BEEN CAST TO FULL HEIGHT OF STRUCTURE AND CONCRETE HAS REACHED THE MINIMUM SPECIFIED COMPRESSIVE STRENGTH (f'c).
   B. CONNECTING SLABS AND BEAMS HAVE BEEN CAST AND CONCRETE IN THOSE ELEMENTS HAS REACHED THE MINIMUM SPECIFIED COMPRESSIVE STRENGTH (f'c).
11. LAP SPLICES:
   A. SEE TABLE 1 OF THIS DETAIL FOR LAP SPLICE LENGTHS.
   B. WHEN MULTIPLE BARS ARE SPLICED AT THE SAME SECTION, THE "CLEAR BAR SPACING" IS DEFINED AS THE MINIMUM CLEAR DISTANCE BETWEEN THE BARS OUTSIDE THE SPLICE LENGTH MINUS ONE BAR DIAMETER.
   C. UNLESS OTHERWISE INDICATED ON THE DRAWINGS, BARS AT A LAP SPLICE SHALL BE IN CONTACT WITH EACH OTHER.
   D. "TOP BARS" ARE HORIZONTAL REINFORCEMENT AT LOCATIONS WHERE MORE THAN 12 INCHES OF FRESH CONCRETE IS CAST IN THE MEMBER BELOW THE BAR.
12. FORM EXPOSED CONCRETE CORNERS AND EDGES WITH 3/4" CHAMFER UNLESS OTHERWISE INDICATED ON THE DRAWINGS.

REINFORCED CONCRETE NOTES 1 OF 3 | 1

TABLE 1: REINFORCING BAR LAP SPLICES: f'c = 4000 PSI, Fy = 60,000 PSI

BAR SIZE	MINIMUM COVER (BAR DIA)	MINIMUM CLEAR BAR SPACING (BAR DIA)	LAP SPLICE LENGTH (INCHES)	
			TOP BARS	OTHER BARS
#4	MORE THAN 1	MORE THAN 2	32 ★	25 ★
	MORE THAN 2	MORE THAN 4	20	16
#5	MORE THAN 1	MORE THAN 2	40 ★	31 ★
	MORE THAN 2	MORE THAN 4	26	20
#6	MORE THAN 1	MORE THAN 2	48 ★	37 ★
	MORE THAN 2	MORE THAN 4	30	24
#7	MORE THAN 1	MORE THAN 2	70 ★	54 ★
	MORE THAN 2	MORE THAN 4	43	33
#8	MORE THAN 1	MORE THAN 2	81 ★	62 ★
	MORE THAN 2	MORE THAN 4	50	38
#9	MORE THAN 1	MORE THAN 2	90 ★	70 ★
	MORE THAN 2	MORE THAN 4	56	42
#10	MORE THAN 1	MORE THAN 2	104 ★	81 ★
	MORE THAN 2	MORE THAN 4	62	48
#11	MORE THAN 1	MORE THAN 2	114 ★	88 ★
	MORE THAN 2	MORE THAN 4	69	54

REINFORCING BAR LAP SPLICE TABLE NOTES:

1. TABULATED SPLICE LENGTHS ARE APPLICABLE ONLY WHEN BOTH REQUIREMENTS FOR MINIMUM COVER AND FOR MINIMUM CLEAR BAR SPACING ARE SATISFIED.
2. ★ = IF THE CLEAR BAR SPACING IS LESS THAN OR EQUAL TO TWO BAR DIAMETERS, OR THE COVER IS LESS THAN OR EQUAL TO ONE BAR DIAMETER, THE LAP SPLICE LENGTH SHALL BE INCREASED BY 50 PERCENT.

REINFORCED CONCRETE NOTES 3 OF 3 | 1

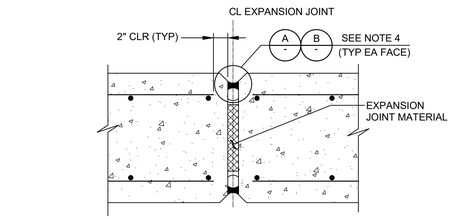

NON-WATER BEARING SLAB OR WALL

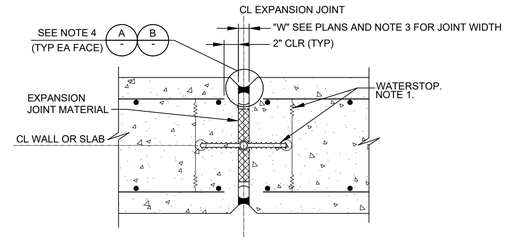

WATER BEARING SLAB OR WALL

EXPANSION JOINT 1 OF 2 | 2

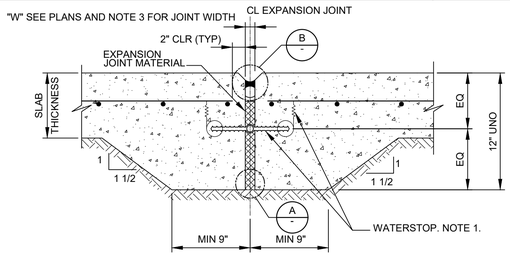

WATER BEARING SLAB LESS THAN 12" THICK

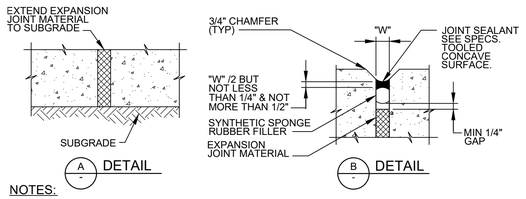

NOTES:

1. 9" WATERSTOP WITH CENTER BULB CENTERED ON JOINT - SEE DETAIL 8 ON DRAWING SG003. PROVIDE WIRE TIES MAX 2'-0" OC. HOG RINGS MAY BE USED IN LIEU OF WIRE LOOPS. THOROUGHLY CLEAN WATERSTOP BEFORE PLACING CONCRETE IN SECOND POUR.
2. JOINT EDGES:
   A. FOR WALLS AND BOTTOM OF EXPOSED SLABS: FORM EDGES WITH 3/4" CHAMFER.
   B. FOR SLABS: EDGE TOP AND ENDS WITH 1/4" RADIUS.
3. "W"=1" UNLESS OTHERWISE INDICATED ON PLANS. (MIN JOINT WIDTH = 3/8", MAX JOINT WIDTH = 2")
4. USE DETAIL A ONLY AT SOIL SIDE OF SLABS ON GRADE. USE DETAIL B AT ALL OTHER LOCATIONS.

EXPANSION JOINT 2 OF 2 | 2

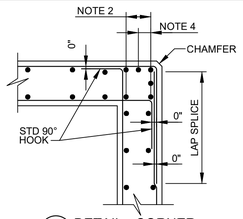

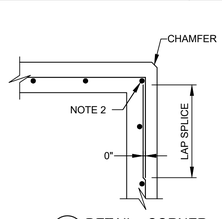

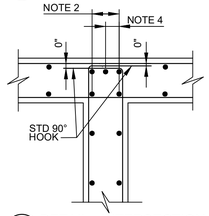

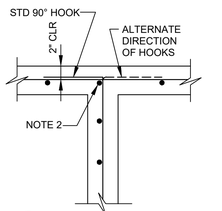

NOTES:

1. BAR SIZE, SPACING, AND ORIENTATION OF BAR LAYERS SHALL BE AS INDICATED ON THE DRAWINGS.
2. AT INTERSECTION, MAKE BAR SIZE THE LARGER OF BAR SIZES IN CONNECTING WALLS. PLACE BARS IN SAME LAYERS AS AT CONNECTING WALLS (TYP).
3. BAR TAILS: 12 BAR DIAMETERS PLUS 12".
4. EXTERIOR VERTICAL BARS SHALL BE PROVIDED AT A SPACING THAT DOES NOT EXCEED THE SPACING SPECIFIED ON THE DRAWINGS REGARDLESS OF THE WALL THICKNESS.

WALL REINFORCEMENT AT CORNERS AND INTERSECTIONS 1 OF 2 | 3

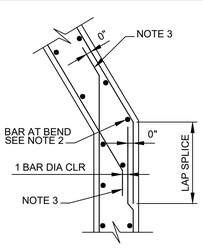

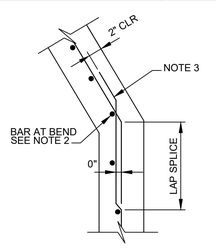

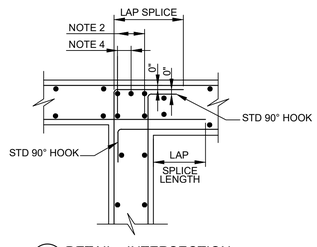

WALL REINFORCEMENT AT CORNERS AND INTERSECTIONS 2 OF 2 | 3

THE CITY OF LOS ANGELES OR ITS OFFICERS OR AGENTS SHALL NOT BE RESPONSIBLE FOR THE ACCURACY OR COMPLETENESS OF ELECTRONIC COPIES OF THIS PLAN SHEET.

REVISION DATES (DESIGN STAGE ONLY)

ENGINEERING
CITY OF LOS ANGELES
Environmental Engineering Division

THIS PLAN WAS ELECTRONICALLY SIGNED AND STAMPED

REGISTERED PROFESSIONAL ENGINEER KWASI M. DUOSE No. 69496 CIVIL STATE OF CALIFORNIA
Date: 03/14/2024
Document Not Valid Unless Signed, Dated and Sealed by Author

BUREAU OF ENGINEERING
VERTICAL CONTROL:
HORIZONTAL CONTROL:
SHEET TITLE: TYPICAL STRUCTURAL DETAILS 1
PROJECT: MACARTHUR LAKE STORMWATER CAPTURE PROJECT
ADDRESS: MACARTHUR PARK 2230 6TH ST LOS ANGELES CA 90057

DEPARTMENT OF PUBLIC WORKS

NO	REVISIONS	DATE	BY

CIP NO. 1920R004
INDEX NO. D-XXXXX

CITY OF LOS ANGELES

DESIGN GROUP	DATE
ENGINEER: CAROLLO ENGINEERS	09/27/2023
ARCHITECT:	
DESIGNED BY: CAROLLO ENGINEERS	09/27/2023
DRAWN BY: CAROLLO ENGINEERS	09/27/2023
CHECKED BY: KWASI DUOSE	03/14/2024
APPROVED BY: KWASI DUOSE	03/14/2024

WORK ORDER
S33WMLRP, S043MSWC, S343MSWC

SHEET NAME
SG002
SHEET 50 OF 108 SHEETS

carollo

SHEET VERSION 4.0.1 FILE PATH: C:\ICS\PW_RENDITION\D0225910\203818_SG002.DWG PLOT DATE: 1/21/2026 5:19 AM SAVED: 12/6/2025 5:42 AM SAVED BY:TDIETZ

FINAL DESIGN SUBMITTAL

THE CITY OF LOS ANGELES OR ITS OFFICERS OR AGENTS SHALL NOT BE RESPONSIBLE FOR THE ACCURACY OR COMPLETENESS OF ELECTRONIC COPIES OF THIS PLAN SHEET.

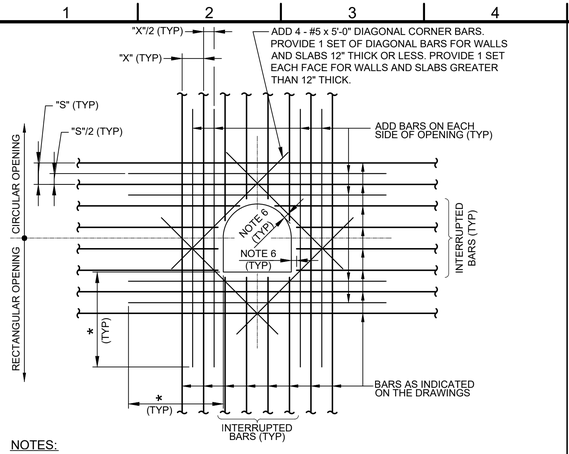

NOTES:

1. AREA OF ADD BARS AT EACH EDGE OF OPENING IN EACH DIRECTION SHALL BE EQUAL TO OR GREATER THAN 1/2 THE CROSS SECTIONAL AREA OF THE INTERRUPTED BARS.
2. PROVIDE STANDARD ACI HOOKS ON BARS IF STRAIGHT EXTENSION PAST THE OPENING, CANNOT BE ACHIEVED.
3. PLACE ADD BARS IN SAME PLANES AS INTERRUPTED REINFORCING.
4. PLACE #5 DIAGONAL BARS ON INSIDE OF INTERRUPTED REINFORCING.
5. * DIMENSION EQUALS OPENING DIMENSION MEASURED PERPENDICULAR TO ADD BARS PLUS LAP SPLICE LENGTH.
6. 2" CLEAR TO CONCRETE OPENINGS OR OUTSIDE FACE OF PIPES AND PIPE SLEEVES. DO NOT OVERCUT REINFORCEMENT FOR EASIER PLACEMENT OF WEEP RINGS AND FLANGES.
7. ADD BARS ARE NOT REQUIRED AT SIDES OF OPENINGS PARALLEL TO AND WITHIN 6" OF A WALL OR BEAM.

ADDITIONAL REINFORCING AT OPENINGS IN CONCRETE SLABS OR WALLS | 4

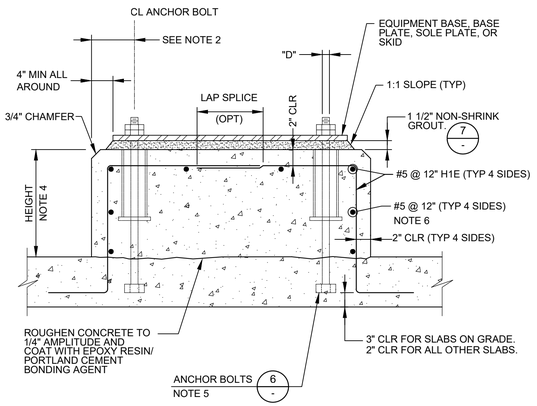

NOTES:

1. "D" = DIAMETER OF ANCHOR BOLT.
2. THE EDGE DISTANCE ON THE ANCHOR BOLTS SHALL NOT BE LESS THAN 6" OR 8 x "D".
3. PAD DIMENSIONS AND ANCHOR BOLT SIZE SHALL CONFORM TO EQUIPMENT MANUFACTURER'S REQUIREMENTS.
4. HEIGHT TO SUIT EQUIPMENT FURNISHED OR AS INDICATED ON THE DRAWINGS.
5. WHERE CONCRETE SLAB OR BEAM THICKNESS WILL NOT ACCOMMODATE THE ANCHOR BOLT, PROVIDE EXTRA THICKNESS FOR SLAB OR BEAM.
6. PROVIDE HOOPS OR CORNERS PER DETAIL 6 ON DRAWING SG002.

EQUIPMENT BASE | 5

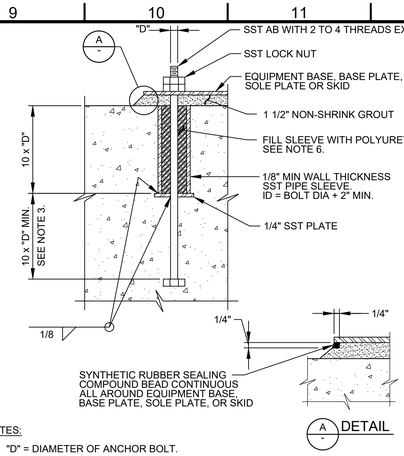

NOTES:

1. "D" = DIAMETER OF ANCHOR BOLT.
2. ANCHOR BOLT DIAMETER AS INDICATED ON THE DRAWINGS. IF NOT INDICATED ON THE DRAWINGS, THE ANCHOR BOLT SIZE SHALL BE AS RECOMMENDED BY THE EQUIPMENT MANUFACTURER.
3. WHERE CONCRETE SLAB OR BEAM THICKNESS WILL NOT ACCOMMODATE THE ANCHOR BOLT, PROVIDE EXTRA THICKNESS OF SLAB OR BEAM.
4. PREFABRICATED PLASTIC ANCHOR BOLT SLEEVE OPTIONAL.
5. DO NOT USE ALL THREAD RODS AS A SUBSTITUTE FOR BOLTS WITH A BOLT HEAD. SMOOTH RODS THREADED AT THE ENDS MAY BE USED IF ACCEPTABLE TO THE ENGINEER. DO NOT WELD NUTS TO THE THREADED RODS.
6. COMPLETELY REMOVE ANY POLYURETHANE FOAM FROM CONCRETE, EQUIPMENT BASE, BASE PLATE, SOLE PLATE, OR SKID, AND ANCHOR BOLTS ABOVE TOP OF CONCRETE.
7. DO NOT USE LEVELING NUTS TO SUPPORT AND LEVEL EQUIPMENT BASE, BASE PLATE, SOLE PLATE, OR SKID.

ANCHOR BOLT - EMBED AND SLEEVE | 6

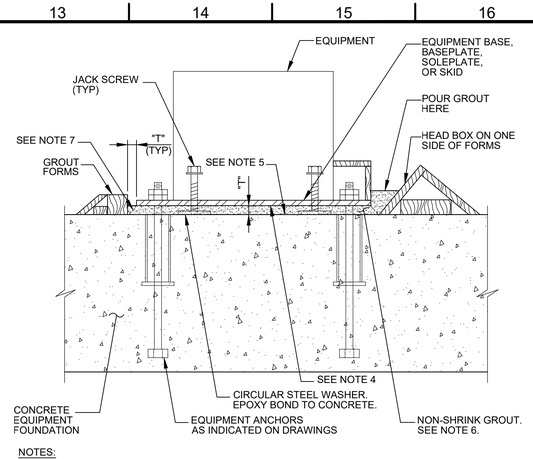

NOTES:

1. "T" = EQUALS GROUT THICKNESS INDICATED ON THE DRAWING. 1" MINIMUM GROUT THICKNESS.
2. FILL ANCHOR SLEEVES WITH POLYURETHANE FOAM BEFORE GROUTING.
3. DO NOT USE LEVELING NUTS ON EQUIPMENT ANCHORS.
4. PREPARE SURFACE OF EQUIPMENT BASES, BASE PLATES, SOLE PLATES, AND SKIDS IN CONTACT WITH GROUT AS SPECIFIED IN SECTION 15050.
5. PREPARE SURFACES OF CONCRETE FOUNDATION IN CONTACT WITH GROUT AS SPECIFIED IN SECTION 15050.
6. PLACE NON-SHRINK GROUT AS SPECIFIED IN SECTION 15050.
7. AFTER GROUT SETS, TRIM GROUT TO 45 DEGREE CHAMFER.

EQUIPMENT GROUTING WITH NON-SHRINK GROUT | 7

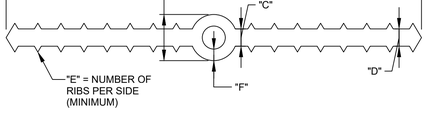

TYPE	"A"	"B"	"C"	"D"	"E"	"F"	APPLICATION
W/O CENTER BULB	6"	-	3/8"	3/8"	7	-	CONSTRUCTION AND CONTROL JOINTS
CENTER BULB	6"	7/8"	3/8"	3/8"	7	9/32"	
CENTER BULB	9"	1"	3/8"	3/8"	7	1/4"	EXPANSION JOINTS 1" AND NARROWER
CENTER BULB	9"	2"	3/8"	3/8"	7	1/4"	EXPANSION JOINTS WIDER THAN 1" AND TENSION/COMPRESSION RING BEAM AT DIGESTERS

NOTES:

1. SEE SPECIFICATIONS FOR MATERIAL REQUIREMENTS.
2. DIMENSIONS ARE MINIMUM, UNLESS OTHERWISE NOTED.

PVC WATERSTOP SCHEDULE | 8

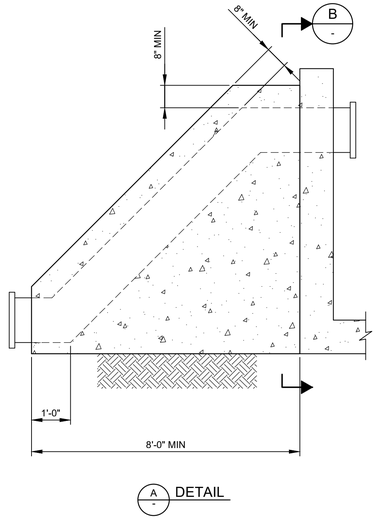

THRUST BLOCK 1 OF 2 | 9

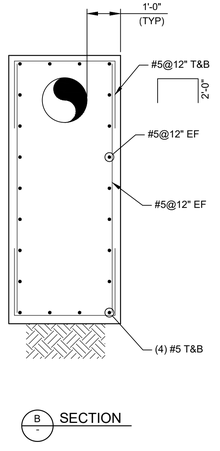

THRUST BLOCK 2 OF 2 | 9

REVISION DATES (DESIGN STAGE ONLY)

BUREAU OF ENGINEERING
VERTICAL CONTROL:
HORIZONTAL CONTROL:
SHEET TITLE: TYPICAL STRUCTURAL DETAILS 2
PROJECT: MACARTHUR LAKE STORMWATER CAPTURE PROJECT
ADDRESS: MACARTHUR PARK 2230 6TH ST LOS ANGELES CA 90057

DEPARTMENT OF PUBLIC WORKS
NO. | REVISIONS | DATE | BY

CITY OF LOS ANGELES
DESIGN GROUP | DATE
ENGINEER: CAROLLO ENGINEERS | 09/27/2023
ARCHITECT:
DESIGNED BY: CAROLLO ENGINEERS | 09/27/2023
DRAWN BY: CAROLLO ENGINEERS | 09/27/2023
CHECKED BY: KWASI DUOSE | 03/14/2024
APPROVED BY: KWASI DUOSE | 07/16/2024

ENGINEERING
CITY OF LOS ANGELES
Environmental Engineering Division

THIS PLAN WAS ELECTRONICALLY SIGNED AND STAMPED
REGISTERED PROFESSIONAL ENGINEER KWASI M. DUOSE No. 69496 CIVIL STATE OF CALIFORNIA
Digitally signed by Kwasi Duose
Date: 2026.01.21 17:19:04 -08'00'

CIP NO. 1920R004
INDEX NO. D-XXXXX
WORK ORDER S33WMLRP, S043MSWC, S343MSWC
SHEET NAME SG003
SHEET 51 OF 108 SHEETS

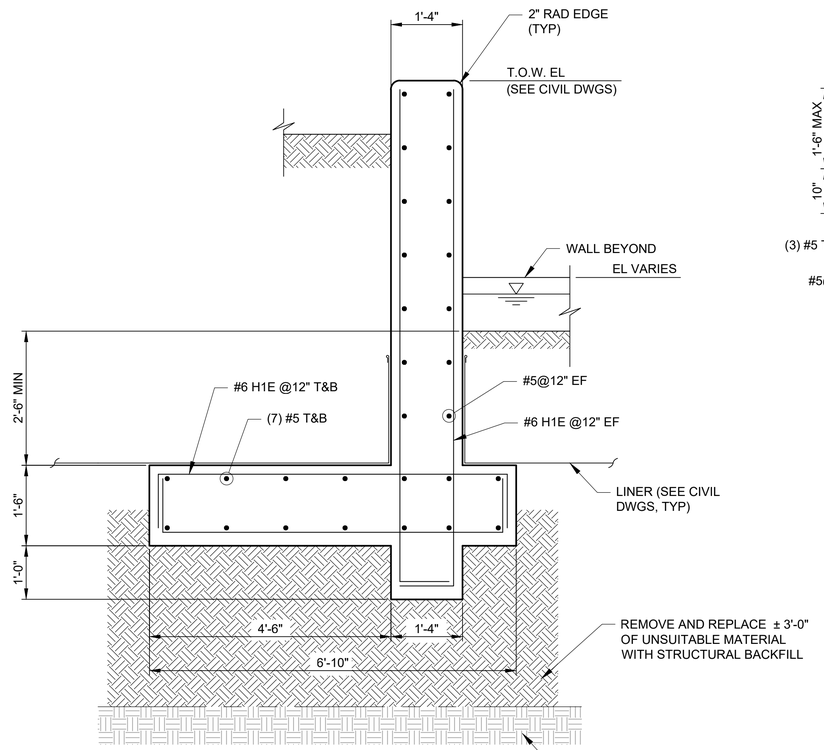

1 WEIR WALL DETAIL
- SCALE: 3/4" = 1'-0"

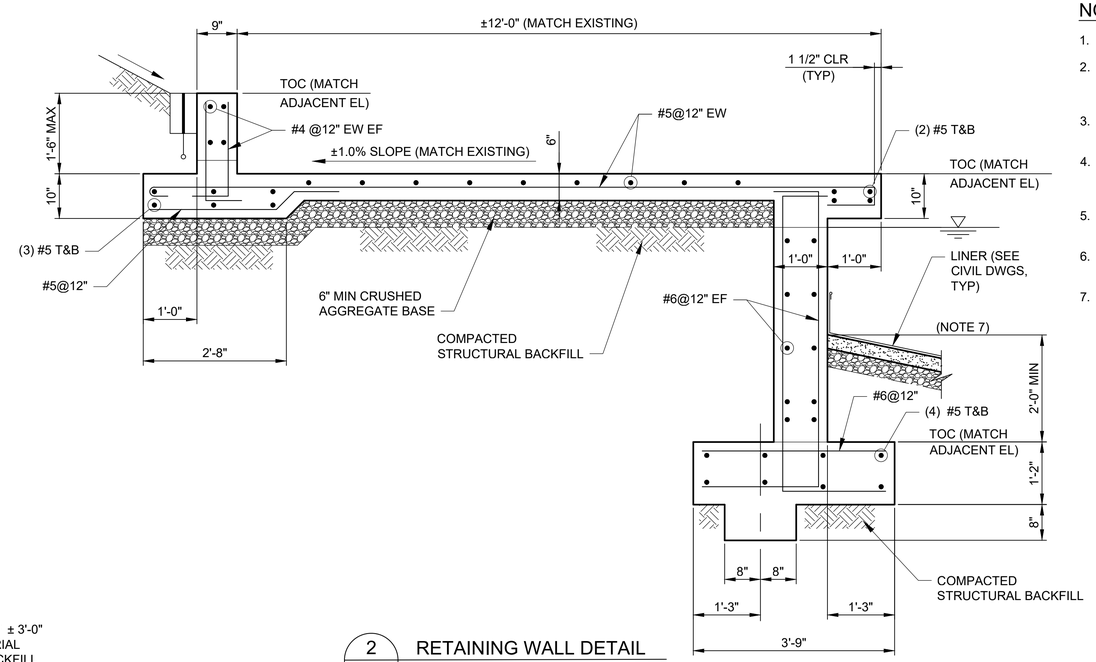

2 RETAINING WALL DETAIL
SB502 SCALE: 3/4" = 1'-0"

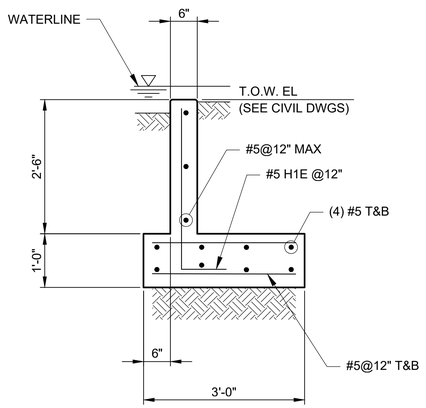

5 TERRACE GARDEN CONCRETE CURB DETAIL
LS601 SCALE: 3/4" = 1'-0"

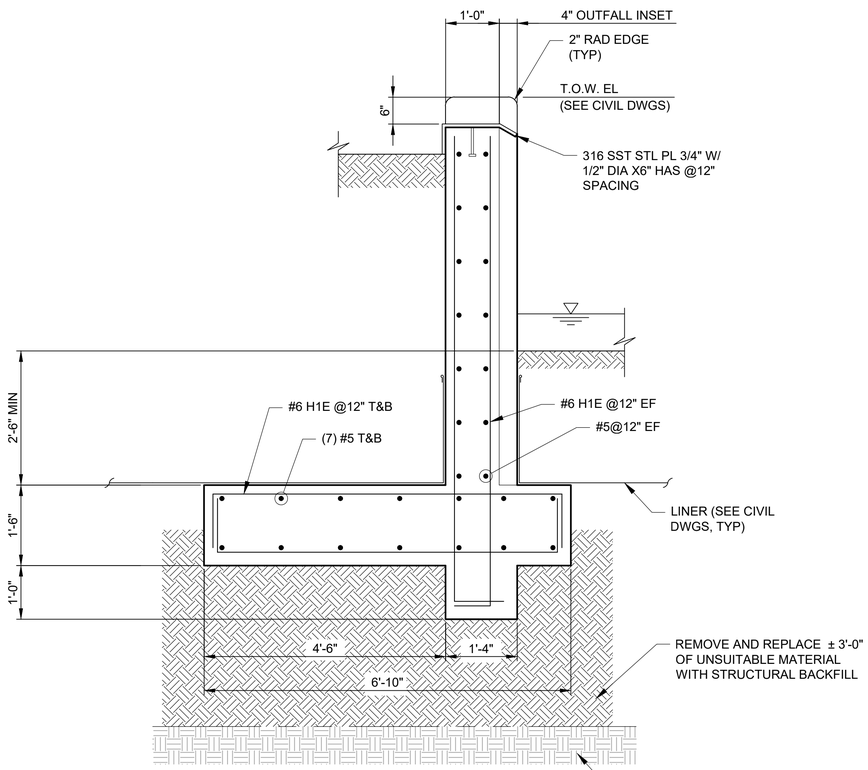

6 WEIR WALL OUTFALL DETAIL
- SCALE: 3/4" = 1'-0"

NOTES:

1. FOR GENERAL STRUCTURAL NOTES SEE DRAWING SG001.
2. ELEVATIONS AND DIMENSIONS ARE APPROXIMATE. CONTRACTOR TO VERIFY IN FIELD PRIOR TO CONSTRUCTION.
3. COORDINATE WITH CIVIL DRAWINGS FOR INVERT ELEVATIONS.
4. PLACE CONSTRUCTION JOINTS IN WALLS AT 30'-0" MAX. ALLOW 3 DAYS BETWEEN ADJACENT CONCRETE PLACEMENTS.
5. AT WALL INTERSECTIONS PROVIDE HORIZONTAL REINFORCING PER DETAIL 6 ON DRAWING SG002.
6. PROVIDE TOOLED JOINTS IN SIDEWALK AT SPACING TO MATCH EXISTING.
7. ELEVATION OF BOTTOM OF BRIDGE GRADE BEAM. SEE DETAIL 3 ON DRAWING SB502.

THE CITY OF LOS ANGELES OR ITS OFFICERS OR AGENTS SHALL NOT BE RESPONSIBLE FOR THE ACCURACY OR COMPLETENESS OF ELECTRONIC COPIES OF THIS PLAN SHEET.

REVISION DATES (DESIGN STAGE ONLY)

ENGINEERING
CITY OF LOS ANGELES
Environmental Engineering Division

THIS PLAN WAS ELECTRONICALLY SIGNED AND STAMPED

REGISTERED PROFESSIONAL ENGINEER VINCENT M. DUOSE No. 69495 CIVIL STATE OF CALIFORNIA

BUREAU OF ENGINEERING
VERTICAL CONTROL:
HORIZONTAL CONTROL:
SHEET TITLE: STRUCTURAL DETAILS
PROJECT: MACARTHUR LAKE STORMWATER CAPTURE PROJECT
ADDRESS: MACARTHUR PARK 2230 6TH ST LOS ANGELES CA 90057

DEPARTMENT OF PUBLIC WORKS

NO	REVISIONS	DATE	BY

CIP NO. 1920R004
INDEX NO. D-XXXXX

CITY OF LOS ANGELES

DESIGN GROUP	DATE
ENGINEER: DAVID GEISLER	09/27/2023
ARCHITECT:	
DESIGNED BY: DAVID GEISLER	09/27/2023
DRAWN BY: TIM DIETZ	09/27/2023
CHECKED BY: KWASI DUOSE	03/14/2024
APPROVED BY: KWASI DUOSE	07/16/2024

Carollo

WORK ORDER S33WMLRP, S043MSWC, S343MSWC

SHEET NAME SB501
SHEET 52 OF 108 SHEETS

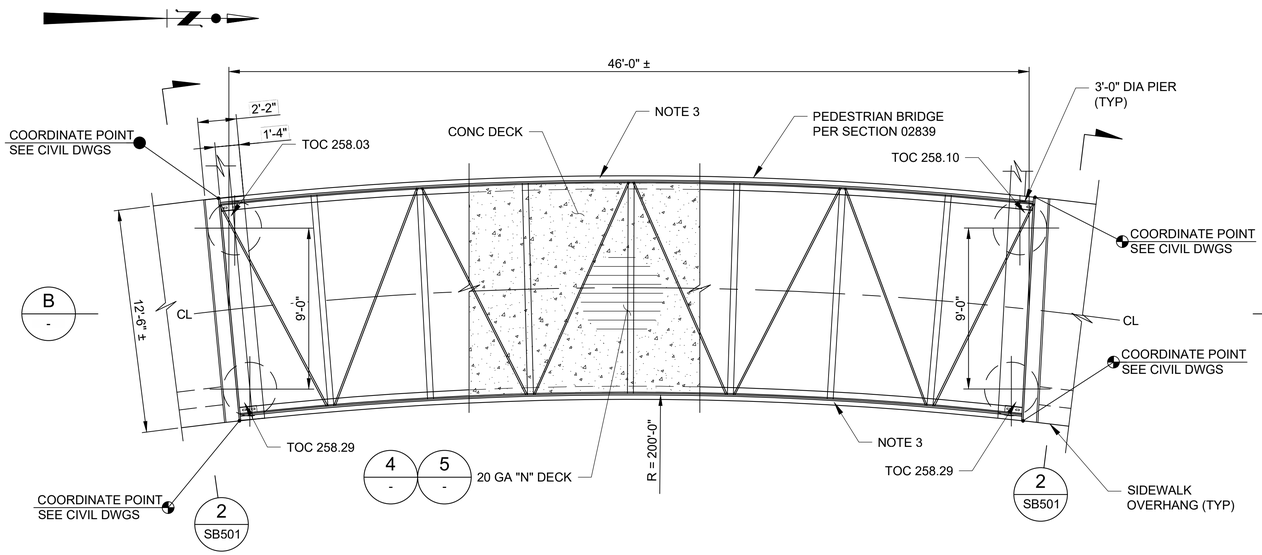

A PLAN
SCALE: 1/4" = 1'-0"

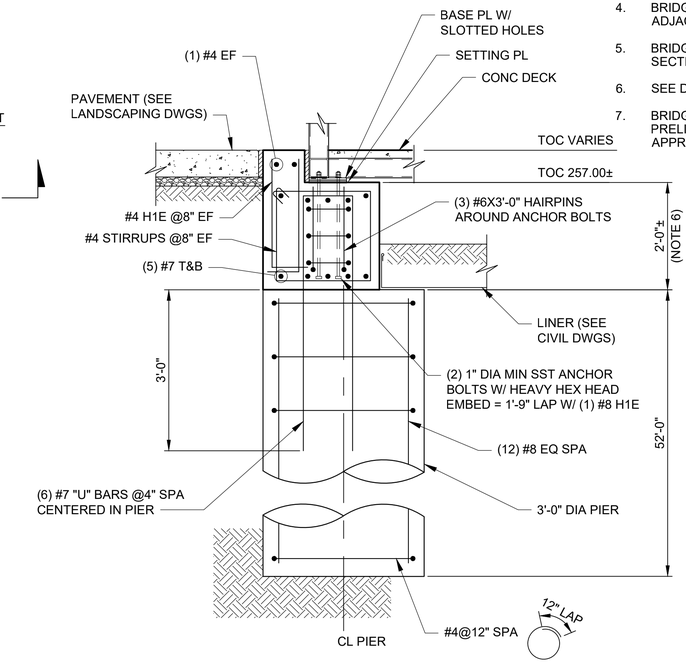

3 DETAIL
SCALE: 3/4" = 1'-0"

NOTES:

1. FOR GENERAL STRUCTURAL NOTES SEE DRAWING SG001.
2. BRIDGE DESIGN LIVE LOAD = H10 (90 PSF).
3. ARCHITECTURAL METAL PANEL AND ASSOCIATED TREATMENT. SEE LANDSCAPING DRAWINGS.
4. BRIDGE TOC ELEVATIONS ARE APPROXIMATE. MATCH ADJACENT GRADES. SEE CIVIL DRAWINGS.
5. BRIDGE TOP DECK DESIGN BY BRIDGE SUPPLIER PER SECTION 02839.
6. SEE DETAIL 2 ON DRAWING SB501.
7. BRIDGE GRADE BEAM AND PIER DESIGNS ARE PRELIMINARY UNTIL FINAL BRIDGE LOADS ARE APPROVED.

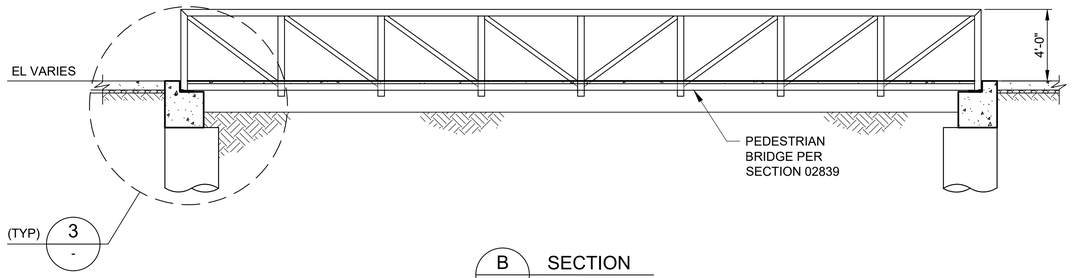

B SECTION
SCALE: 1/4" = 1'-0"

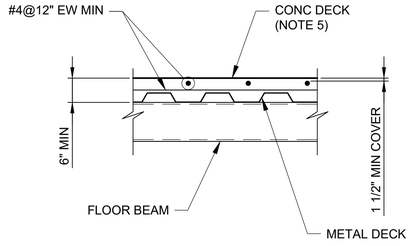

4 DETAIL
SCALE: NO SCALE

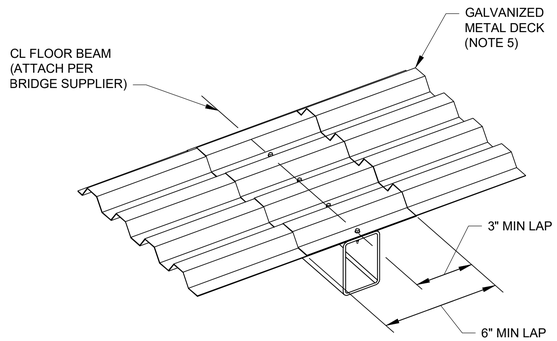

5 DETAIL
SCALE: NO SCALE

THE CITY OF LOS ANGELES OR ITS OFFICERS OR AGENTS SHALL NOT BE RESPONSIBLE FOR THE ACCURACY OR COMPLETENESS OF ELECTRONIC COPIES OF THIS PLAN SHEET.

REVISION DATES
(DESIGN STAGE ONLY)

ENGINEERING
CITY OF LOS ANGELES
Environmental Engineering Division

THIS PLAN WAS ELECTRONICALLY SIGNED AND STAMPED

REGISTERED PROFESSIONAL ENGINEER
VINH M. DUOSE
No. 69495
CIVIL
STATE OF CALIFORNIA

BUREAU OF ENGINEERING
VERTICAL CONTROL:
HORIZONTAL CONTROL:
SHEET TITLE: BRIDGE PLAN, SECTIONS AND DETAILS
PROJECT: MACARTHUR LAKE STORMWATER CAPTURE PROJECT
ADDRESS: MACARTHUR PARK 2230 6TH ST LOS ANGELES CA 90057

DEPARTMENT OF PUBLIC WORKS
CIP NO. 1920R004
INDEX NO. D-XXXXX

NO.	REVISIONS	DATE	BY

CITY OF LOS ANGELES

DESIGN GROUP	DATE
ENGINEER: DAVID GEISLER	09/27/2023
ARCHITECT:	
DESIGNED BY: DAVID GEISLER	09/27/2023
DRAWN BY: TIM DIETZ	09/27/2023
CHECKED BY: KWASI DUOSE	03/14/2024
APPROVED BY: KWASI DUOSE	07/16/2024

WORK ORDER
S33WMLRP, S043MSWC, S343MSWC

SHEET NAME
SB502
SHEET 53 OF 108 SHEETS

carollo

FINAL DESIGN SUBMITTAL

PIPING SYMBOLS

DOUBLE LINE	SINGLE LINE	DESCRIPTION
		WELDED JOINT
		GROOVED END JOINT
		FLANGED JOINT
		HUB & SPIGOT JOINT (RUBBER GASKET)
		PUSH-ON JOINT (RESTRAINED)
		ADAPTER SIDE GROOVED END ADAPTER FLANGE
		FLANGED COUPLING ADAPTER
		FLANGED COUPLING ADAPTER WITH THRUST TIES
		FLEXIBLE COUPLING
		FLEXIBLE COUPLING WITH THRUST TIES
		METAL BELLOWS EXP JOINT
		ELASTOMER BELLOWS EXP JOINT
		FLEXIBLE COUPLING ADAPTER
		DISMANTLING JOINT
		EXPANSION COMPENSATOR
		ELBOW UP
		ELBOW DOWN
		TEE UP
		TEE DOWN
		LATERAL UP
		LATERAL DOWN
		CONCENTRIC REDUCER
		ECCENTRIC REDUCER (FOT. FOB)
		UNION
		CAP
		ANCHOR
		ELBOW, 90 DEGREE
		CROSS
		TEE
		ELBOW, 45 DEGREE
		ELBOW, 22.5 DEGREE
		ELBOW, 11.25 DEGREE
		LATERAL

DOUBLE LINE	SINGLE LINE	DESCRIPTION
		GATE VALVE
	K	KNIFE GATE VALVE
		BUTTERFLY VALVE
V	V	CHARACTERIZED BALL CONTROL VALVE
		BALL VALVE
		GLOBE VALVE
		3-WAY GLOBE TYPE MIXING VALVE
		FOUR WAY VALVE
		DIAPHRAGM VALVE
		PLUG VALVE
		LUBRICATED PLUG VALVE
		ECCENTRIC PLUG VALVE
		CONCENTRIC PLUG VALVE
		SWING CHECK VALVE
		WAFER CHECK VALVE
		PINCH VALVE
		BALL CHECK VALVE
		DUAL CHECK VALVE
		SILENT CHECK VALVE
		MUD VALVE (PLAN VIEW)
		NEEDLE VALVE
		CHECK BACKFLOW PREVENTER
		PIPE MATERIAL CHANGE

MECHANICAL SYMBOLS

SINGLE LINE	DESCRIPTION
	AIR OR CHEMICAL DIFFUSER
	QUICK DISCONNECT HIGH PRESSURE AIR OR FLUSHING
	BATCHMETER
	AIR VENT
	BASKET STRAINER
	BLOWER
	CALIBRATION COLUMN
	COMPRESSOR/TURBINE
	COMPRESSOR: RECIPROCATING
	DIAPHRAGM SEAL
	DRAIN
	EJECTOR OR EDUCTOR
M	ELECTRIC MOTOR
	EQUIPMENT DRAIN
	EXPANSION JOINT, FLEXIBLE VIBRATION JOINT
	FAN: EXHAUST/SUPPLY
	FILTER
	FIRE HYDRANT
	FLAME ARRESTER
	FLAME ARRESTER WITH THERMALLY OPERATED VALVE
	FLOOR DRAIN
	FLOW SWITCH
	GAUGE: PRESSURE
	GAUGE: DIFFERENTIAL PRESSURE
	WEIR
	MIXER
	OIL OR MOISTURE TRAP
	PRIMARY LEVEL ELEMENT: BUBBLER
	PRIMARY LEVEL ELEMENT: ELECTRODE
	PRIMARY LEVEL ELEMENT: FLOAT SWITCH
	PRIMARY LEVEL ELEMENT: FLUID
	PRIMARY LEVEL ELEMENT: INVERTED COLUMN

SINGLE LINE	DESCRIPTION
	PRIMARY LEVEL ELEMENT: RADAR
	PRIMARY LEVEL ELEMENT: ULTRASONIC
	PRIMARY FLOW ELEMENT: FLUME
X	PRIMARY FLOW ELEMENT: X = C - CORIOLIS X = M - MAGNETIC X = P - PROPELLER X = PT - PITOT TUBE X = R - ROTAMETER X = T - TURBINE X = TH - THERMAL X = U - ULTRASONIC X = D - DENSITY
	PRIMARY FLOW ELEMENT: ORIFICE PLATE
	PRIMARY FLOW ELEMENT: VENTURI TUBE
	PRIMARY FLOW ELEMENT: WEIR
	PULSATION DAMPENER
	PUMP: CENTRIFUGAL
	PUMP: DIAPHRAGM
	PUMP: METERING
	PUMP: PLUNGER
	PUMP: PERISTALTIC TUBE METERING
	PUMP: PROGRESSIVE CAVITY
	PUMP: RECIPROCATING
	PUMP: ROTARY
	PUMP: SCREW
	PUMP: SUBMERSIBLE
	PUMP: VERTICAL LIFT
	PIPE REDUCER: CONCENTRIC
	PIPE REDUCER: ECCENTRIC (FOT, FOB)
	ROTARY CHEMICAL FEEDER
	RUPTURE DISK
	SAMPLE PORT
	SIGHT GLASS
	SLIDE GATE
	SLUICE GATE
	STRAINER: WYE TYPE

SINGLE LINE	DESCRIPTION
	STRAINER: WYE TYPE WITH BLOWOFF
	THERMOMETER
	VALVE: ANGLE
	VALVE: AIR RELIEF
	VALVE: CONE
	VALVE: FLAPPER CHECK
	VALVE: FOUR WAY
	VALVE: HOSE
	VALVE: PLUG CONCENTRIC
	VALVE: PRESSURE RELIEF PRESSURE-REDUCING REGULATOR
	VALVE: TELESCOPING
	VALVE: THREE WAY AIR OPERATED
M	VALVE: THREE WAY MOTOR OPERATED
S	VALVE: THREE WAY SOLENOID OPERATED
	VALVE: VACUUM
	BACKPRESSURE REGULATOR SELF-CONTAINED
	BACKPRESSURE REGULATOR W/ EXTERNAL PRESSURE TAP
	PRESSURE-REDUCING REGULATOR: SELF-CONTAINED
	PRESSURE-REDUCING REGULATOR W/EXTERNAL PRESSURE TAP

IDENTIFICATION SYMBOLS

CHEMICAL INJECTION POINT — CHEMICAL / DWG NO.

PIPE DESIGNATOR — PIPE SIZE — FLOW STREAM — X" XXX

UNIQUE IDENTIFIER — CONTINUATION FROM DWG NO. — CONTINUATION TO DWG NO.

CONTINUATION TAG — A / B C

EQUIPMENT / VALVE TAG — XXX-XX-XXXX

KEY TAG — X

LINE SYMBOLS

PIPE ABOVE OR BELOW GROUND

PIPE UNDERNEATH SLAB OR STRUCTURE

FUTURE

EXISTING

DEMO

PROCESS LINE SYMBOLS

PRIMARY PROCESS FLOW IN PIPE

SECONDARY PROCESS FLOW IN PIPE

PRIMARY PROCESS FLOW IN CHANNEL

SECONDARY PROCESS FLOW IN CHANNEL

GENERAL PIPING NOTES

1. LAY PIPE TO UNIFORM GRADE BETWEEN INDICATED ELEVATION POINTS.
2. SIZE OF FITTINGS SHOWN ON PLANS SHALL CORRESPOND TO ADJACENT STRAIGHT RUN OF PIPE, UNLESS OTHERWISE INDICATED. TYPE OF JOINT AND FITTING MATERIAL SHALL BE THE SAME AS SHOWN FOR ADJACENT STRAIGHT RUN OF PIPE.
3. LOCATION AND NUMBER OF PIPE HANGERS AND PIPE SUPPORTS SHOWN IS ONLY APPROXIMATE. THE CONTRACTOR SHALL COORDINATE THE SUPPORT SYSTEMS LAYOUT IN ACCORDANCE WITH THE SPECIFICATIONS. MAXIMUM SPACING SHALL BE AS SPECIFIED.
4. ALL JOINT SHALL BE WATERTIGHT. WALL PIPES WITH THRUST COLLARS AS SPECIFIED SHALL BE USED WHEREVER PIPING PASSES FROM A STRUCTURE TO BACKFILL.
5. ALL FLEXIBLE CONNECTORS OR FLANGED COUPLING ADAPTERS SHALL BE PROVIDED WITH THRUST TIES, BLOCKS, OR ANCHORS, UNLESS OTHERWISE NOTED. THRUST PROTECTION SHALL BE ADEQUATE FOR TEST PRESSURES SPECIFIED.
6. SYMBOLS, LEGENDS, AND PIPE USE IDENTIFICATION SHOWN SHALL BE FOLLOWED THROUGHOUT THE PLANS, WHEREVER APPLICABLE, NOT ALL OF THE VARIOUS PIPING COMPONENTS ARE NECESSARILY USED IN THE PROJECT.
7. ALL BURIED PIPING SPECIFIED TO BE PRESSURE TESTED. BURIED PIPING SHALL BE FLANGED, WELDED, SCREWED PIPING, OR RESTRAINED BELL AND SPIGOT UNLESS OTHERWISE NOTED.
8. NUMBER AND LOCATION OF UNIONS SHOWN ON PLANS IS ONLY APPROXIMATE. PROVIDE ALL UNIONS NECESSARY TO FACILITATE CONVENIENT REMOVAL OF VALVES AND MECHANICAL EQUIPMENT.
9. WHERE A GROOVED END COUPLING IS SHOWN, IT SHALL BE THE RIGID JOINT TYPE, UNLESS OTHERWISE SPECIFIED. WHERE A FLANGED COUPLING ADAPTER IS SHOWN, A STANDARD FLANGE SHALL BE JOINED TO THE COUPLING ADAPTER.
10. FOR ALL BURIED PIPING, PROVIDE INSULATING FLANGE SETS OR INSULATING COUPLINGS WHENEVER THE PIPING EXISTS OR ENTERS A STRUCTURE, WHERE NEW PIPE CONNECTS TO EXISTING PIPE, OR WHERE PIPE OR FITTINGS OF DIFFERENT MATERIAL ARE CONNECTED.
11. INSTALL TEST STATION WHERE INSULATING FLANGE SETS OR INSULATING COUPLINGS ARE INSTALLED BELOW GRADE.
12. BURIED DUCTILE IRON PIPE VALVES AND FITTINGS SHALL BE WRAPPED IN TWO LAYERS OF LOOSE POLYETHYLENE PER AWWA STANDARD C105.
13. ENCASE ALL PIPING UNDER SLABS OR STRUCTURES. EXTEND ENCASEMENT ONE FOOT BEYOND THE EDGE OF FOOTING OR SLAB. ENCASEMENT SHALL BE PER DETAIL 2 ON DRAWING MG501 AND DETAIL 3 ON DRAWING MG501.
14. WHENEVER PIPING ENTERS OR EXITS A STRUCTURE PROVIDE A FLEXIBLE CONNECTION AS INDICATED BY CIVIL DETAILS.
15. ALL WALL AND FLOOR PIPE PENETRATION SHALL HAVE SLEEVES OR WALL PIPES AS INDICATED IN THE TYPICAL DETAILS.
16. ALL DRAIN PIPING SHALL SLOPE 1/4" PER FT UNLESS OTHERWISE NOTED.
17. WITH THE EXCEPTION OF OVERFLOWING PIPING, ALL EXPOSED PROCESS AND WATER PIPING SHALL BE HEAT TRACED AND INSULATED. CHEMICAL PIPING SHALL BE HEAT TRACED AND INSULATED AS INDICATED ON PROCESS AREA MECHANICAL DRAWINGS.
18. NO FIELD WELDING OF STAINLESS STEEL PIPE WILL BE ALLOWED.

carollo

ENGINEERING
CITY OF LOS ANGELES
Environmental Engineering Division

THIS PLAN WAS ELECTRONICALLY SIGNED AND STAMPED

REGISTERED PROFESSIONAL ENGINEER — JULIA CHRISTINE SCHMITT — No. 84039 — CIVIL — STATE OF CALIFORNIA — Digitally signed by Julia Christine Schmitt — Date: 2024.07.16 15:29:30 -07'00'

BUREAU OF ENGINEERING

VERTICAL CONTROL:
HORIZONTAL CONTROL:

SHEET TITLE: GENERAL MECHANICAL LEGEND AND SYMBOLS

PROJECT: MACARTHUR LAKE STORMWATER CAPTURE PROJECT

ADDRESS: MACARTHUR PARK 2230 6TH ST LOS ANGELES CA 90057

DEPARTMENT OF PUBLIC WORKS

NO.	REVISIONS	DATE	BY

CIP NO. 1920R004

INDEX NO. D-XXXXX

CITY OF LOS ANGELES

DESIGN GROUP	DATE
ENGINEER: CAROLLO ENGINEERS	09/27/2023
ARCHITECT:	
DESIGNED BY: CAROLLO ENGINEERS	09/27/2023
DRAWN BY: CAROLLO ENGINEERS	09/27/2023
CHECKED BY: KIRK GARDINER	03/14/2024
APPROVED BY: JULIA C. SCHMITT	07/16/2024

WORK ORDER S33WMLRP, S043MSWC, S343MSWC

SHEET NAME MG001

SHEET 54 OF 108 SHEETS

THE CITY OF LOS ANGELES OR ITS OFFICERS OR AGENTS SHALL NOT BE RESPONSIBLE FOR THE ACCURACY OR COMPLETENESS OF ELECTRONIC COPIES OF THIS PLAN SHEET.

REVISION DATES (DESIGN STAGE ONLY)

SHEET VERSION 4.0.1 FILE PATH: C:\ICS\PW_RENDITION\D0225921\203818MG001.DWG PLOT DATE: 1/21/2026 5:20 AM SAVED: 12/29/2025 10:20 AM SAVED BY:CHARLEY

FINAL DESIGN SUBMITTAL

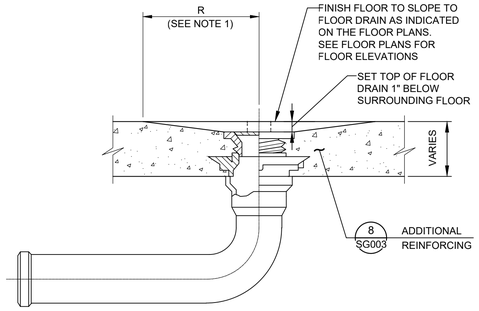

NOTE:

1. PROVIDE 12" RADIUS SLOPE TO EQUIPMENT DRAINS WHERE FLOOR DOES NOT SLOPE TO DRAIN.

DRAIN WITHOUT TRAP - FLOOR | 1

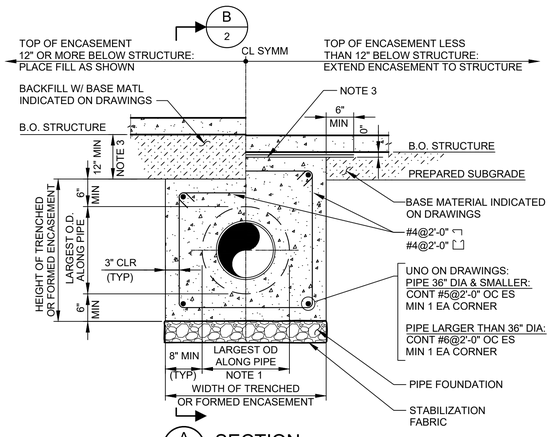

NOTE:

1. PIPE MATERIAL AND PIPE JOINTS / COUPLERS AS INDICATED ON THE DRAWINGS.
2. TERMINATE CONCRETE ENCASEMENT AT A PIPE JOINT OUTSIDE OF THE STRUCTURE.
3. WHERE DISTANCE BETWEEN BOTTOM OF STRUCTURE AND TOP OF TYPICAL ENCASEMENT SECTION IS LESS THAN 12", EXTEND ENCASEMENT UPWARD TO UNDERSIDE OF SLAB. STEEL TROWEL TOP SURFACE AND SEPARATE ENCASEMENT FROM STRUCTURE WITH 2 LAYERS 6 MIL POLYETHYLENE SHEETING.
4. ENCASEMENT CONCRETE: CLASS A-NA.
5. SPLICE PERIMETER REINFORCEMENT OUTSIDE INTERSECTION OF ENCASEMENT WHERE POSSIBLE.

CONCRETE ENCASEMENT - BELOW STRUCTURE 1 OF 2 | 2

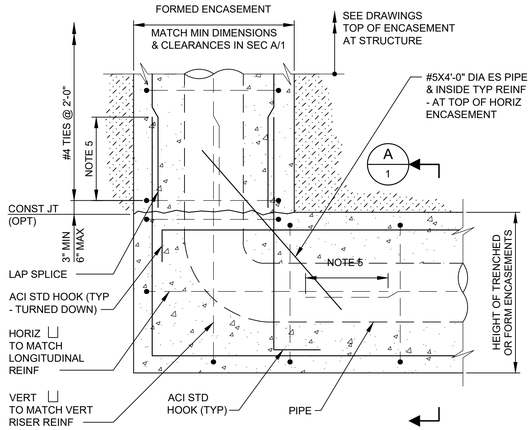

CONCRETE ENCASEMENT - BELOW STRUCTURE 2 OF 2 | 2

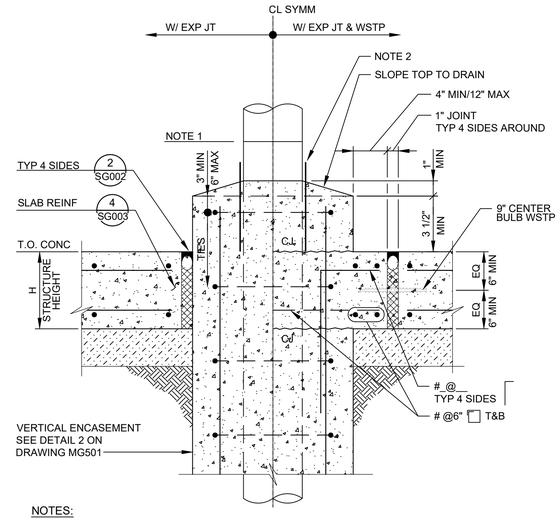

NOTES:

1. SEE MECHANICAL DRAWINGS FOR PIPE JOINT AND COUPLER.
2. WRAP PIPE TO 2" ABOVE TOP OF CONCRETE WITH 2 LAYERS 6 MIL POLYETHYLENE SHEETING. CUT SHEETING TO TOP OF CONCRETE AFTER PLACEMENT AND CURING.

PIPE ENCASEMENT - CONNECTION AT SLAB - EXPANSION JOINT | 3

ADJUSTABLE PIPE SADDLE SUPPORT SCHEDULE (INCHES)					
SIZE OF SUPPORTED PIPE **	PIPE SIZE "A"	PIPE SIZE "B"	"C"	"D"	
				MINIMUM	MAXIMUM
2 1/2 *	2 1/2	1 1/2	12	8	13
3	2 1/2	1 1/2	12	8 1/2	13 1/2
3 1/2	2 1/2	1 1/2	12	8 1/2	13 1/2
4	3	2 1/2	12	9 1/2	14
6	3	2 1/2	12	10 1/2	15 1/2
8	3	2 1/2	12	11 1/2	16 1/2
10	3	2 1/2	12	13 1/2	18 1/2
12	3	2 1/2	12	15	19 1/2
14	4	3	12	16 1/2	20 1/2
16	4	3	12	17 1/2	22 1/2
18	6	3 1/2	14	19 1/2	24
20	6	3 1/2	14	21	25 1/2
24	6	4	14	23 1/2	28 1/2
30	6	4	14	27	31 1/2
32	6	4	14	28 1/2	32 1/2
36	6	4	14	30 1/2	34 1/2

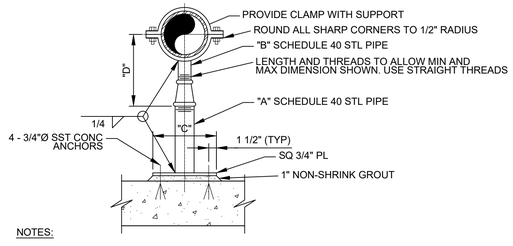

NOTES:

1. HOT-DIP GALVANIZED SUPPORT AFTER FABRICATION.
2. * = USE 2 1/2" SUPPORTS FOR PIPES LESS THEN 2 1/2"Ø.
3. ** = NOMINAL PIPE SIZE.

PIPE SUPPORT - POST ON CONCRETE: ADJUSTABLE HEIGHT STEEL W/ TOP SADDLE | 4

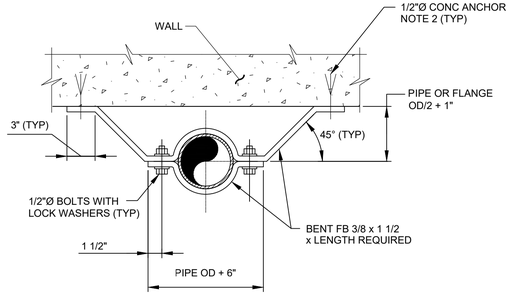

NOTE:

1. IF SUPPORT IS SUBMERGED OR LOCATED BELOW THE TOP OF WALL IN WATER BEARING STRUCTURE, ALL MATERIAL SHALL BE STAINLESS STEEL. IN ALL OTHER AREAS, ALL MATERIAL SHALL BE HOT-DIP GALVANIZED STEEL UNLESS OTHERWISE INDICATED ON THE DRAWINGS.
2. CONCRETE ANCHOR TO BE SPECIFIED BY CONTRACTOR IN ACCORDANCE TO SPECIFICATION SECTION 03250.
3. PRECAST MANUFACTURER TO DESIGN VAULT FOLLOWING ASTM C957 USING MIN WALL THICKNESS OF 5" AND CONCRETE MINIMUM STRENGTH OF 5000 PSI FOR H35 LOADING.

PIPE SUPPORT - WALL - VERTICAL PIPE ON CLAMP SWAY BRACE | 5

carollo

ENGINEERING
CITY OF LOS ANGELES
Environmental Engineering Division

REGISTERED PROFESSIONAL ENGINEER CHRISTINE SCHMITT No. 84039 CIVIL STATE OF CALIFORNIA JULIA
Digitally signed by Julia Christine Schmitt Date: 2025.07.30 15:30:30 -07'00'

THIS PLAN WAS ELECTRONICALLY SIGNED AND STAMPED

BUREAU OF ENGINEERING

VERTICAL CONTROL:
HORIZONTAL CONTROL:

SHEET TITLE: MECHANICAL DETAILS 1

PROJECT: MACARTHUR LAKE STORMWATER CAPTURE PROJECT

ADDRESS: MACARTHUR PARK 2230 6TH ST LOS ANGELES CA 90057

DEPARTMENT OF PUBLIC WORKS

NO	REVISIONS	DATE	BY

CIP NO. 1920R004

INDEX NO. D-XXXXX

CITY OF LOS ANGELES

DESIGN GROUP	DATE
ENGINEER: CAROLLO ENGINEERS	09/27/2023
ARCHITECT:	
DESIGNED BY: CAROLLO ENGINEERS	09/27/2023
DRAWN BY: CAROLLO ENGINEERS	09/27/2023
CHECKED BY: KIRK GARDINER	03/14/2024
APPROVED BY: JULIA C. SCHMITT	07/16/2024

WORK ORDER
S33WMLRP, S043MSWC, S343MSWC

SHEET NAME
MG501

SHEET 55 OF 108 SHEETS

THE CITY OF LOS ANGELES OR ITS OFFICERS OR AGENTS SHALL NOT BE RESPONSIBLE FOR THE ACCURACY OR COMPLETENESS OF ELECTRONIC COPIES OF THIS PLAN SHEET.

REVISION DATES (DESIGN STAGE ONLY)

FINAL DESIGN SUBMITTAL

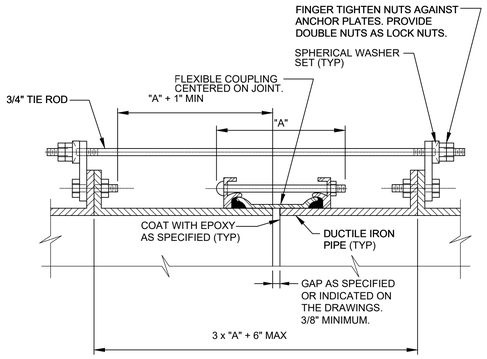

ROD SCHEDULE		
PIPE THRUST. SEE NOTE 2.	TYPE OF CONNECTION	NO. OF RODS
0-6,000#	I	2
6,001 - 12,000#	II	2
12,001 - 18,000#	II	3
18,001 - 24,000#	II	4
24,001 - 30,000#	II	5

PIPE JOINT - DIP - FLEXIBLE COUPLING - RESTRAINED 1 OF 2 | 6

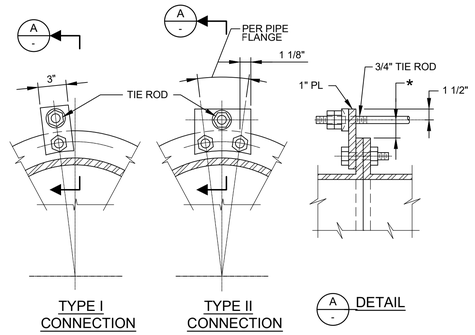

NOTES:

1. ALL EXPOSED FLEXIBLE COUPLINGS SHALL HAVE TIE RODS UNLESS SPECIFICALLY INDICATED OTHERWISE ON THE DRAWINGS.
2. PIPE THRUST SHALL BE BASED ON TEST PRESSURE.
3. PIPE THRUST = 0.7854 x D^2 x TEST PRESSURE, WHERE "D" IS PIPE OD.
4. MINIMUM TIE ROD YIELD = 48,000 PSI.
5. FOR THRUSTS GREATER THAN 30,000 POUNDS, ADD ONE 3/4 INCH DIAMETER TIE ROD FOR EVERY 6,000 POUNDS INCREASE IN THRUST.
6. ALL ROD CONNECTIONS SHALL BE TYPE II FOR THRUSTS GREATER THAN 30,000 POUNDS.
7. GRIND ALL CORNERS SMOOTH.
8. * = AS REQUIRED TO CLEAR FLEXIBLE COUPLING. 3/4" MINIMUM AND 1 1/2" MAXIMUM.

PIPE JOINT - DIP - FLEXIBLE COUPLING - RESTRAINED 2 OF 2 | 6

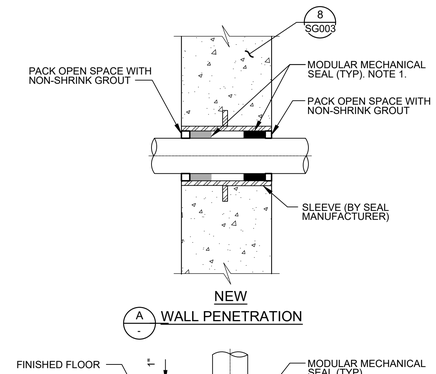

NOTES:

1. WALLS THICKER THAN 12" INSTALL MODULAR MECHANICAL SEAL AT BOTH ENDS OF WALL SLEEVE.
2. INSTALL MODULAR MECHANICAL SEALS WITH 316 STAINLESS STEEL BOLTS

WALL PENETRATION - CAST-IN SLEEVE W/ BARRIER SEALS 1 OF 2 | 7

WALL PENETRATION - CAST-IN SLEEVE W/ BARRIER SEALS 2 OF 2 | 7

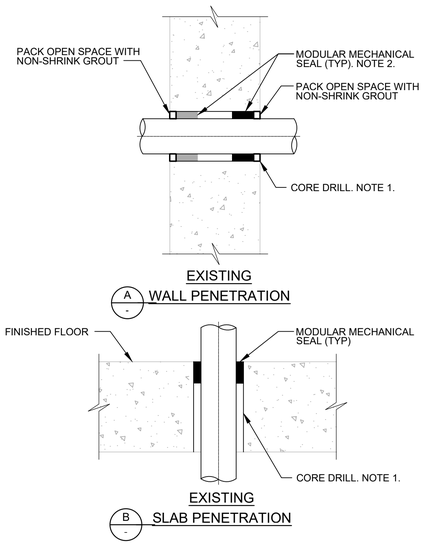

NOTES:

1. CORE DRILL DIAMETER, PROCEDURES, AND POST -DRILLING SURFACE PREPARATION PER MODULAR MECHANICAL SEAL MANUFACTURER'S RECOMMENDATIONS FOR SPECIFIC PIPE OD.
2. WALLS 12" OR THICKER INSTALL MODULAR MECHANICAL SEAL AT BOTH ENDS OF PENETRATION.
3. INSTALL MODULAR MECHANICAL SEALS WITH 316 STAINLESS STEEL BOLTS

PIPING - VALVE - VACUUM AND AIR RELEASE: 3" AND SMALLER VALVE | 8

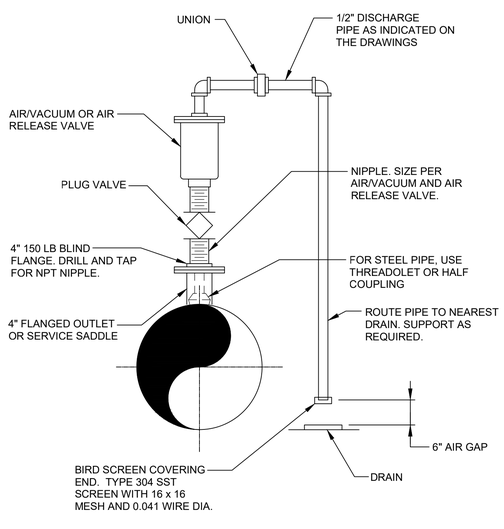

NOTES:

1. VALVE SIZE SHALL BE AS INDICATED ON THE DRAWINGS.
2. SERVICE TAP AND PLUG VALVE SHALL MATCH VALVE INLET SIZE.

PRESSURE INSTRUMENT MOUNTING DETAIL | 9

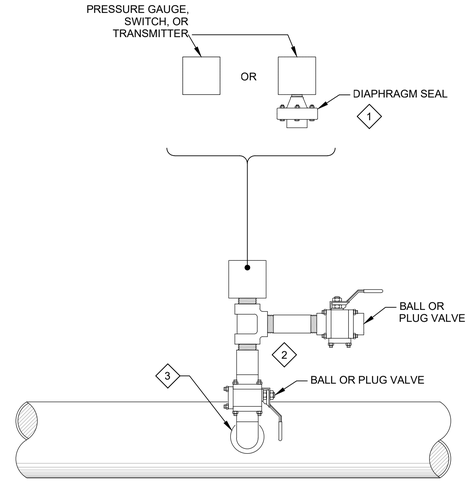

KEY NOTES:

1. USE THE INSTRUMENT DATA SHEETS IN DIVISION 17 OR DIVISIONS 40 SPECS TO IDENTIFY INDIVIDUAL REQUIREMENTS FOR DIAPHRAGM SEALS.
2. ALL VALVE AND PIPE MATERIAL SHALL BE COMPATIBLE WITH PROCESS FLUID.
3. THREADED TAP OR SADDLE CONNECTION FOR DUCTILE IRON PIPE. WELD-O-LET OR THREAD-O-LET FOR WELDED PIPE. TEE OR REDUCING TEE FOR NON-METALLIC PIPE.

carollo

ENGINEERING
CITY OF LOS ANGELES
Environmental Engineering Division

THIS PLAN WAS ELECTRONICALLY SIGNED AND STAMPED

REGISTERED PROFESSIONAL ENGINEER JULIA CHRISTINE SCHMITT No. 84039 CIVIL STATE OF CALIFORNIA 07-31-26

BUREAU OF ENGINEERING

VERTICAL CONTROL:
HORIZONTAL CONTROL:
SHEET TITLE: MECHANICAL DETAILS 2
PROJECT: MACARTHUR LAKE STORMWATER CAPTURE PROJECT
ADDRESS: MACARTHUR PARK 2230 6TH ST LOS ANGELES CA 90057

DEPARTMENT OF PUBLIC WORKS

NO	REVISIONS	DATE	BY

CIP NO. 1920R004

INDEX NO. D-XXXXX

CITY OF LOS ANGELES

DESIGN GROUP	DATE
ENGINEER: CAROLLO ENGINEERS	09/27/2023
ARCHITECT:	
DESIGNED BY: CAROLLO ENGINEERS	09/27/2023
DRAWN BY: CAROLLO ENGINEERS	09/27/2023
CHECKED BY: KIRK GARDINER	03/14/2024
APPROVED BY: JULIA C. SCHMITT	07/16/2024

WORK ORDER S33WMLRP, S043MSWC, S343MSWC

SHEET NAME MG502

SHEET 56 OF 108 SHEETS

THE CITY OF LOS ANGELES OR ITS OFFICERS OR AGENTS SHALL NOT BE RESPONSIBLE FOR THE ACCURACY OR COMPLETENESS OF ELECTRONIC COPIES OF THIS PLAN SHEET.

REVISION DATES (DESIGN STAGE ONLY)

SHEET VERSION 4.0.1 FILE PATH: C:\ICS\PW_RENDITION\D0225921\203818MG502.DWG PLOT DATE: 1/21/2026 5:20 AM SAVED: 12/29/2025 10:21 AM SAVED BY:CHARLEY

FINAL DESIGN SUBMITTAL

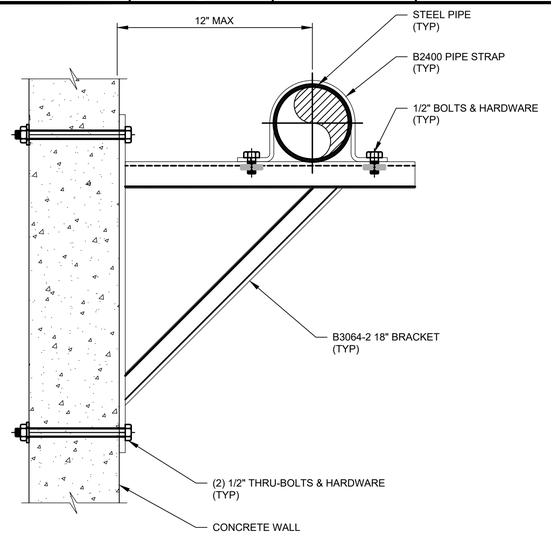

NOTES:

1. WALLS THICKER THAN 12" INSTALL MODULAR MECHANICAL SEAL AT BOTH ENDS OF WALL SLEEVE.
2. INSTALL MODULAR MECHANICAL SEALS WITH 316 STAINLESS STEEL BOLTS
3. PIPE SUPPORT AND MOUNTING HARDWARE SHALL BE HOT-DIP GALVANIZED.

PIPE SUPPORT - WALL - HORIZONTAL PIPE ON CLAMP W/ UNISTRUT WALL BRACKET — 10

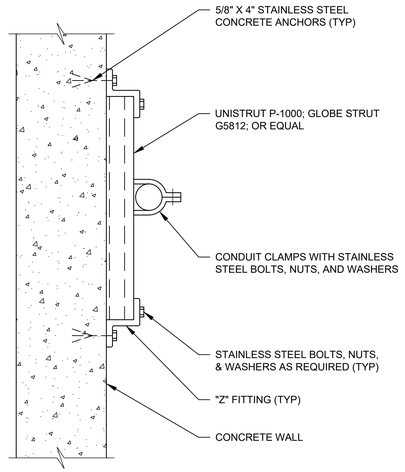

NOTES:

1. THIS DETAIL TYPICAL FOR BOTH VERTICAL AND HORIZONTAL MOUNTING - FOR HORIZONTAL MOUNTING, PLACE 1"± NON-SHRINK GROUT UNDER THE SUPPORT.
2. PREFORMED CHANNEL, FITTINGS AND CLAMPS SHALL BE HOT-DIP GALVANIZED STEEL. FIELD COAT ALL CUTS.
3. CHANNELS TO BE SPACED AT 5'-0" OC MAXIMUM.

PIPE SUPPORT - WALL - WALL MOUNT UNISTRUT W/ PIPE CLAMPS — 11

ProjectLine
Technical Services, Inc

carollo

ENGINEERING
CITY OF LOS ANGELES
Environmental Engineering Division

THIS PLAN WAS ELECTRONICALLY SIGNED AND STAMPED

REGISTERED PROFESSIONAL ENGINEER ROBERT D. GETTER No. M 30352 EXP. 09-30-25 MECHANICAL

BUREAU OF ENGINEERING

VERTICAL CONTROL:
HORIZONTAL CONTROL:

SHEET TITLE: MECHANICAL DETAILS 3
PROJECT: MACARTHUR LAKE STORMWATER CAPTURE PROJECT
ADDRESS: MACARTHUR PARK 2230 6TH ST LOS ANGELES CA 90057

DEPARTMENT OF PUBLIC WORKS

NO.	REVISIONS	DATE	BY

CIP NO. 1920R004

INDEX NO. D-XXXXX

CITY OF LOS ANGELES

	DESIGN GROUP	DATE
ENGINEER:	ROBERT GETTER	01/22/2026
ARCHITECT:		
DESIGNED BY:	HENRY LUONG	01/22/2026
DRAWN BY:	CHARLEY KHUU / PAVEL PETIN	01/22/2026
CHECKED BY:	ROBERT GETTER ROBERT MORRONI	01/22/2026
APPROVED BY:	ROBERT GETTER	01/22/2026

WORK ORDER
S33WMLRP, S043MSWC, S343MSWC

SHEET NAME
MG503

SHEET 57 OF 108 SHEETS

REVISION DATES (DESIGN STAGE ONLY)

THE CITY OF LOS ANGELES OR ITS OFFICERS OR AGENTS SHALL NOT BE RESPONSIBLE FOR THE ACCURACY OR COMPLETENESS OF ELECTRONIC COPIES OF THIS PLAN SHEET.

FINAL DESIGN SUBMITTAL

PIPE SCHEDULE										
PROCESS ABBREVIATION	SERVICE	NOMINAL DIAMETER (INCHES)	MATERIAL	CLASS	SPEC SECTION	JOINT/FITTINGS	TEST PRESSURE	LINING	COATING	SPEC
DR	DRAIN	-	-	-	-	-	-	-	-	
-	UNDERGROUND	1 - 4	PVC	SCH 80	15640	SOLVENT WELD	50 PSIG	NONE	NONE	15640
SW	STORM WATER	-	-	-	-	-	-	-	-	
-	ABOVEGROUND	4 - 18	DIP	CL 53	15700	FLANGED	150 PSIG	CEMENT MORTAR	EPOXY POLYURETHANE COATING	15700
-	UNDERGROUND	4 - 18	DIP	150	15700	MECHANICAL RESTRAINED JOINT	150 PSIG	CEMENT MORTAR	2 LAYERS OF POLYETHYLENE ENCASEMENT	15700
-	UNDERGROUND	36	RCP	-	-	BELL AND SPIGOT	20 FT	NONE	-	
-	LAKE RECIRCULATION	4	STEEL	-	15720	WELDED FITTING	25 PSIG	-	ALIPHATIC POLYURETHANE SYSTEM - SYSTEM 4	09800

PUMP SCHEDULE								
PUMP #	DESCRIPTION	TYPE	DESIGN FLOW	TDH (FT)	HP	VFD	MAX SPEED	SPEC
P-101	PUMP NO.1	SUBMERSIBLE. NON-CLOG	600 GPM	35	11	NO	1800	11510
P-102	PUMP NO.2	SUBMERSIBLE. NON-CLOG	3000 GPM	42	60	YES	1170	11510
P-103	PUMP NO.3	SUBMERSIBLE. NON-CLOG	3000 GPM	42	60	YES	1170	11510
P-104	PUMP NO. 4	SUBMERSIBLE. NON-CLOG	325 GPM	24	5	NO	1800	-

MISC. EQUIPMENT				
EQUIPMENT #	DESCRIPTION	LOCATION	SIZE	SPEC
FM-101	MAGNETIC FLOWMETER	VMV1	18"	17160
FM-303	AREA VELOCITY FLOWMETER	MV2	12"	17240
FM-505	AREA VELOCITY FLOWMETER	MV1	24"	17240

VALVE SCHEDULE (4" OR LARGER)								
VALVE #	DESCRIPTION	LOCATION	TYPE	SIZE	CLASS	OPERATOR	REMARKS	SPEC
MOV-010	PLUG VALVE	(E) VV2	PLUG	16"	150	MOTORIZED AC REVERSING	OPEN / CLOSE	15700
-	GATE VALVE	(E) IRRIGATION PIPE	GATE	6"	150	MANUAL	QUANTITY OF 2 ON (E) IRRIGATION LINE	15700
MOV-220	GATE VALVE	VV1	GATE	24"	150	MOTORIZED AC REVERSING	OPEN / CLOSE	15700
MOV-303	PLUG VALVE	VV4	PLUG	12"	150	MOTORIZED AC REVERSING	OPEN / CLOSE	15700
MOV-330	PLUG VALVE	VV3	PLUG	24"	150	MOTORIZED AC REVERSING	OPEN / CLOSE	15700
GV-111	GATE VALVE	VMV1	GATE	6"	150	MANUAL	-	15700
GV-112	GATE VALVE	VMV1	GATE	12"	150	MANUAL	-	15700
GV-113	GATE VALVE	VMV1	GATE	12"	150	MANUAL	-	15700
CV-111	CHECK VALVE	VMV1	CHECK	6"	150	SWING CHECK	-	15700
CV-112	CHECK VALVE	VMV1	CHECK	12"	150	SWING CHECK	-	15700
CV-113	CHECK VALVE	VMV1	CHECK	12"	150	SWING CHECK	-	15700
CRF-303	CHECK VALVE	VMV2	CHECK	18"	150	SPRING ASSIST RUBBER FLAP	-	15700
-	GATE VALVE	BLOW OFF VAULT	GATE	6"	150	MANUAL	-	15700

THE CITY OF LOS ANGELES OR ITS OFFICERS OR AGENTS SHALL NOT BE RESPONSIBLE FOR THE ACCURACY OR COMPLETENESS OF ELECTRONIC COPIES OF THIS PLAN SHEET.

REVISION DATES (DESIGN STAGE ONLY)

ENGINEERING
CITY OF LOS ANGELES
Environmental Engineering Division

THIS PLAN WAS ELECTRONICALLY SIGNED AND STAMPED

REGISTERED PROFESSIONAL ENGINEER JULIA CHRISTINE SCHMITT No. 84039 CIVIL STATE OF CALIFORNIA
Digitally signed by Julia Christine Schmitt
DN: cn=Julia Christine Schmitt, o=Bureau of Engineering, ou=Civil, email=julia.schmitt@lacity.org, c=US
Date: 2024.07.16 15:29:30 -07'00'

BUREAU OF ENGINEERING
VERTICAL CONTROL:
HORIZONTAL CONTROL:
SHEET TITLE: MECHANICAL PIPING, PUMP FLOW METER AND MISC SCHEDULES
PROJECT: MACARTHUR LAKE STORMWATER CAPTURE PROJECT
ADDRESS: MACARTHUR PARK 2230 6TH ST LOS ANGELES CA 90057

DEPARTMENT OF PUBLIC WORKS
CITY OF LOS ANGELES

NO.	REVISIONS	DATE	BY

CIP NO. 1920R004
INDEX NO. D-XXXXX

DESIGN GROUP	DATE
ENGINEER: RYLEE MOWRER	09/27/2023
ARCHITECT:	
DESIGNED BY: RYLEE MOWRER	09/27/2023
DRAWN BY: PERRY CHESEBRO	09/27/2023
CHECKED BY: KIRK GARDINER	03/14/2024
APPROVED BY: JULIA C. SCHMITT	07/16/2024

carollo

WORK ORDER S33WMLRP, S043MSWC, S343MSWC

SHEET NAME
MG601
SHEET 58 OF 108 SHEETS

SHEET VERSION 4.0.1 FILE PATH: C:\ICS\PW_RENDITION\D0225921\203818MG601.DWG PLOT DATE: 1/23/2026 5:44 AM SAVED: 12/29/2025 12:48 PM SAVED BY:CHARLEY

FINAL DESIGN SUBMITTAL

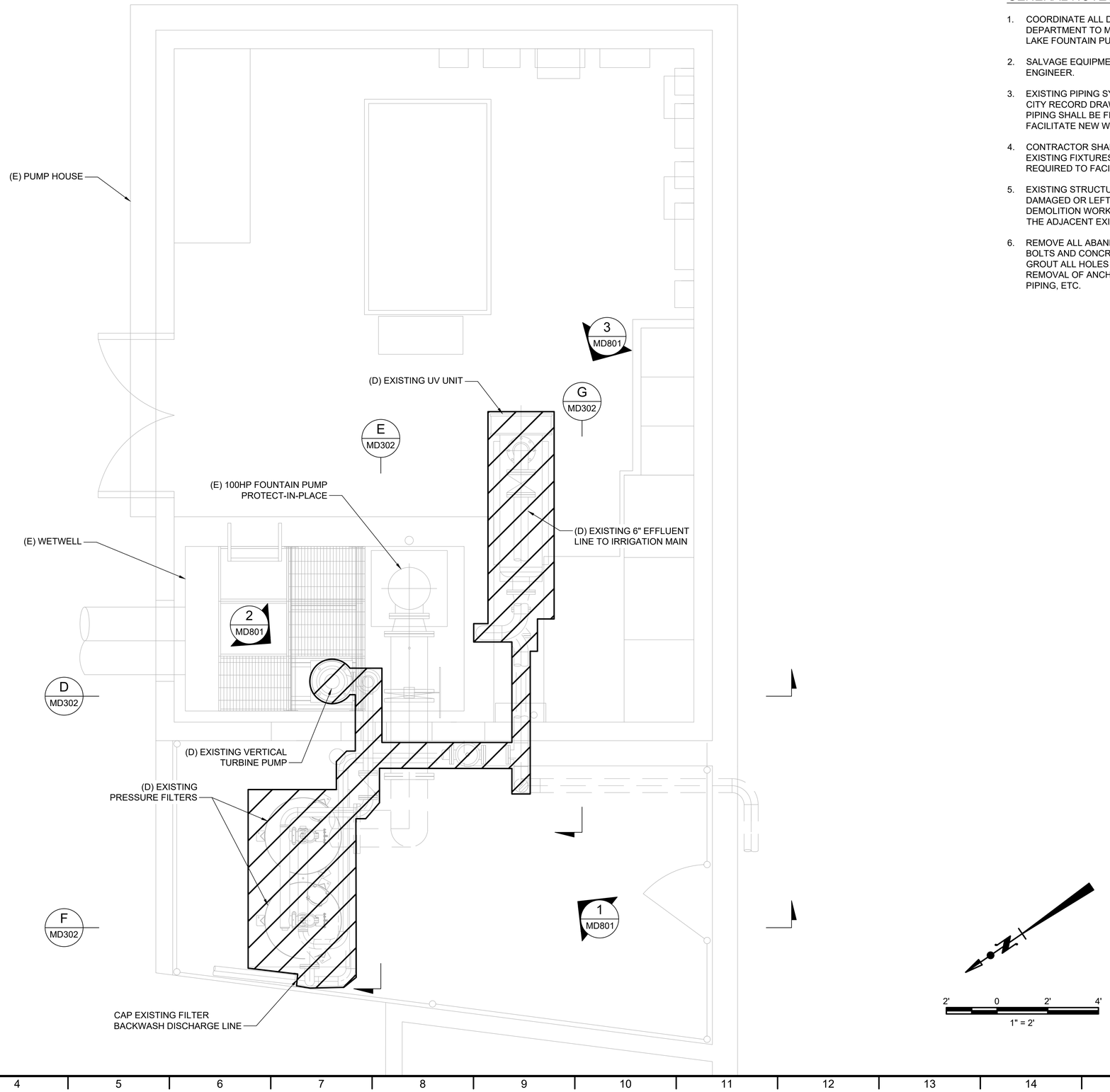

GENERAL NOTES:

1. COORDINATE ALL DEMO WORK CITY RAP DEPARTMENT TO MAINTAIN OPERATION OF EXISTING LAKE FOUNTAIN PUMP, AND WITH NEW WORK.
2. SALVAGE EQUIPMENT AS DIRECTED BY THE ENGINEER.
3. EXISTING PIPING SYSTEMS ARE SHOWN BASED ON CITY RECORD DRAWINGS. LOCATION AND SIZE OF PIPING SHALL BE FIELD VERIFIED AS REQUIRED TO FACILITATE NEW WORK.
4. CONTRACTOR SHALL FIELD VERIFY LOCATION OF EXISTING FIXTURES, SUPPORTS AND EQUIPMENT AS REQUIRED TO FACILITATE NEW WORK.
5. EXISTING STRUCTURES WHICH ARE CUT, REMOVED, DAMAGED OR LEFT WITH OPENINGS BY THE DEMOLITION WORK SHALL BE REPAIRED TO MATCH THE ADJACENT EXISTING STRUCTURE.
6. REMOVE ALL ABANDONED PIPE SUPPORTS, ANCHOR BOLTS AND CONCRETE ANCHORS PATCH WITH EPOXY GROUT ALL HOLES AND PENETRATIONS LEFT BY REMOVAL OF ANCHOR BOLTS, CONCRETE ANCHORS, PIPING, ETC.

ENGINEERING
CITY OF LOS ANGELES
Environmental Engineering Division

THIS PLAN WAS ELECTRONICALLY SIGNED AND STAMPED

REGISTERED PROFESSIONAL ENGINEER ROBERT D. GETTER No. M 30752 EXP. 09-30-26 MECHANICAL STATE OF CALIFORNIA

BUREAU OF ENGINEERING

VERTICAL CONTROL:
HORIZONTAL CONTROL:

SHEET TITLE: DEMOLITION PUMP HOUSE PLAN
PROJECT: MACARTHUR LAKE STORMWATER CAPTURE PROJECT
ADDRESS: MACARTHUR PARK 2230 6TH ST LOS ANGELES CA 90057

DEPARTMENT OF PUBLIC WORKS

NO.	REVISIONS	DATE	BY

CIP NO. 1920R004

INDEX NO. D-XXXXX

CITY OF LOS ANGELES

	DESIGN GROUP	DATE
ENGINEER:	ROBERT GETTER	01/22/2026
ARCHITECT:		
DESIGNED BY:	HENRY LUONG	01/22/2026
DRAWN BY:	CHARLEY KHUU / PAVEL PETIN	01/22/2026
CHECKED BY:	ROBERT GETTER ROBERT MORRONI	01/22/2026
APPROVED BY:	ROBERT GETTER	01/22/2026

ProjectLine Technical Services, Inc

carollo

WORK ORDER S33WMLRP, S043MSWC, S343MSWC

SHEET NAME
MD102
SHEET 59 OF 108 SHEETS

THE CITY OF LOS ANGELES OR ITS OFFICERS OR AGENTS SHALL NOT BE RESPONSIBLE FOR THE ACCURACY OR COMPLETENESS OF ELECTRONIC COPIES OF THIS PLAN SHEET.

REVISION DATES (DESIGN STAGE ONLY)

SHEET VERSION 4.0.1 FILE PATH: C:\PW_WORKING\CAROLLO_200000\D0225921\203818MD102.DWG PLOT DATE: 1/15/2026 3:57 PM SAVED: 1/15/2026 3:50 PM SAVED BY:CHARLEY

FINAL DESIGN SUBMITTAL

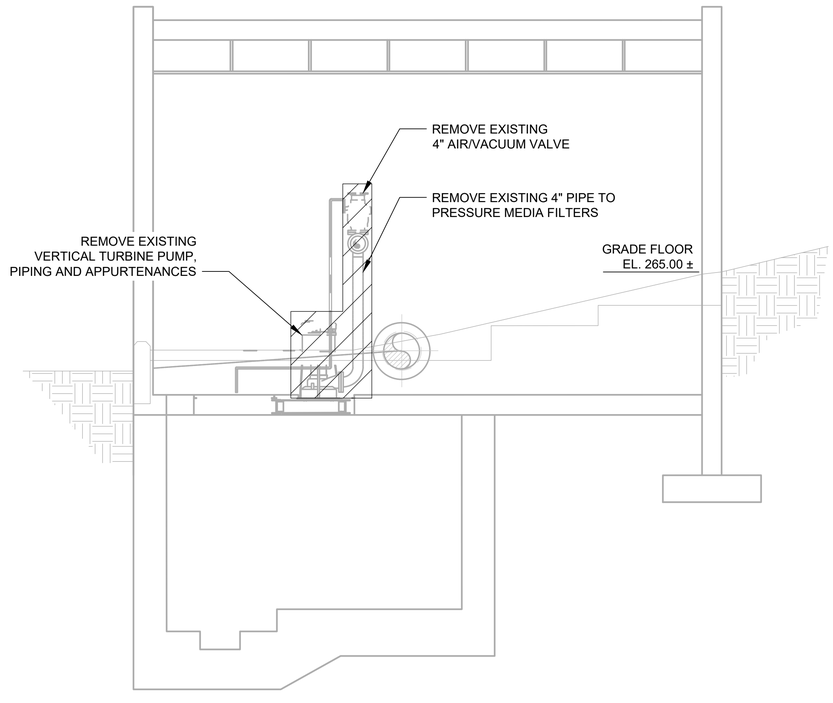

D SECTION
MD102 SCALE: 3/8" = 1'-0"

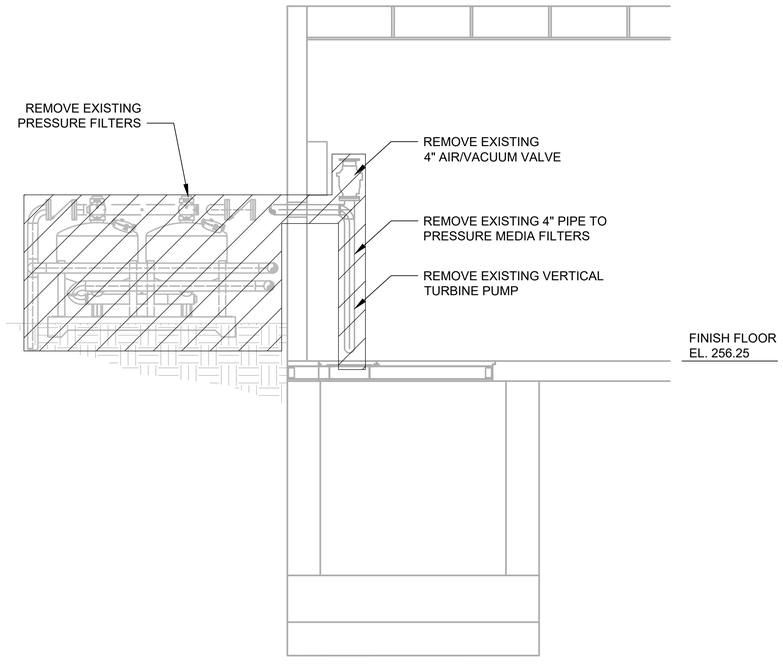

E SECTION
MD102 SCALE: 3/8" = 1'-0"

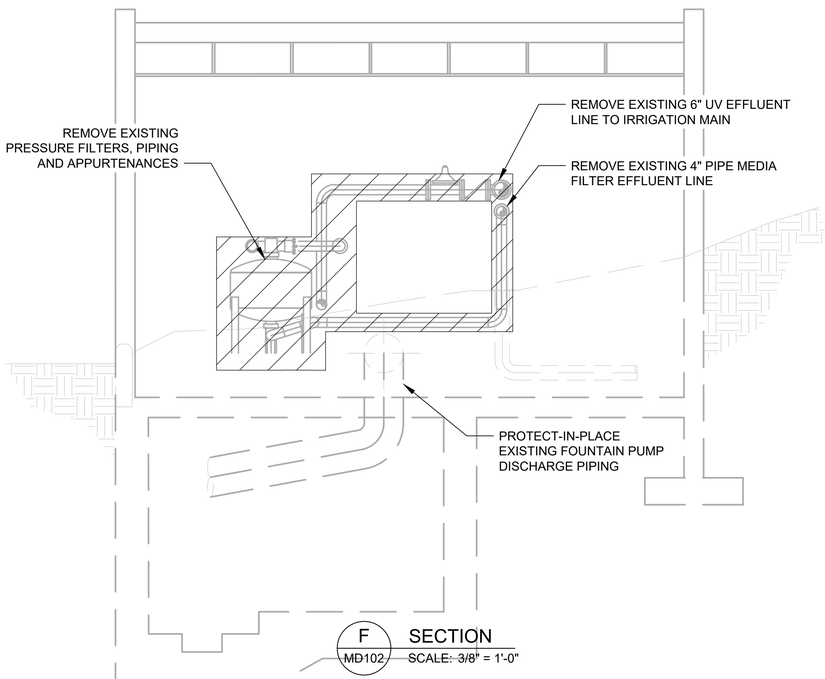

F SECTION
MD102 SCALE: 3/8" = 1'-0"

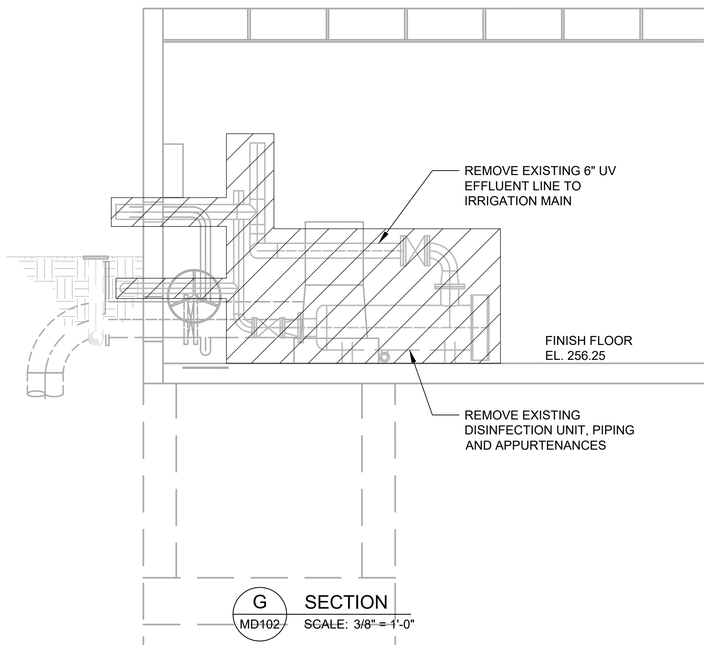

G SECTION
MD102 SCALE: 3/8" = 1'-0"

GENERAL NOTES:

1. COORDINATE ALL DEMO WORK CITY RAP DEPARTMENT TO MAINTAIN OPERATION OF EXISTING LAKE FOUNTAIN PUMP, AND WITH NEW WORK.
2. SALVAGE EQUIPMENT AS DIRECTED BY THE ENGINEER.
3. EXISTING PIPING SYSTEMS ARE SHOWN BASED ON CITY RECORD DRAWINGS. LOCATION AND SIZE OF PIPING SHALL BE FIELD VERIFIED AS REQUIRED TO FACILITATE NEW WORK.
4. CONTRACTOR SHALL FIELD VERIFY LOCATION OF EXISTING FIXTURES, SUPPORTS AND EQUIPMENT AS REQUIRED TO FACILITATE NEW WORK.
5. EXISTING STRUCTURES WHICH ARE CUT, REMOVED, DAMAGED OR LEFT WITH OPENINGS BY THE DEMOLITION WORK SHALL BE REPAIRED TO MATCH THE ADJACENT EXISTING STRUCTURE.
6. REMOVE ALL ABANDONED PIPE SUPPORTS, ANCHOR BOLTS AND CONCRETE ANCHORS PATCH WITH EPOXY GROUT ALL HOLES AND PENETRATIONS LEFT BY REMOVAL OF ANCHOR BOLTS, CONCRETE ANCHORS, PIPING, ETC.

THE CITY OF LOS ANGELES OR ITS OFFICERS OR AGENTS SHALL NOT BE RESPONSIBLE FOR THE ACCURACY OR COMPLETENESS OF ELECTRONIC COPIES OF THIS PLAN SHEET.

REVISION DATES (DESIGN STAGE ONLY)

ENGINEERING
CITY OF LOS ANGELES
Environmental Engineering Division

THIS PLAN WAS ELECTRONICALLY SIGNED AND STAMPED

REGISTERED PROFESSIONAL ENGINEER ROBERT D. GETTER No. M 30752 EXP. 09-30-26 MECHANICAL STATE OF CALIFORNIA

BUREAU OF ENGINEERING

VERTICAL CONTROL:
HORIZONTAL CONTROL:

SHEET TITLE: DEMOLITION PUMP HOUSE SECTIONS
PROJECT: MACARTHUR LAKE STORMWATER CAPTURE PROJECT
ADDRESS: MACARTHUR PARK 2230 6TH ST LOS ANGELES CA 90057

DEPARTMENT OF PUBLIC WORKS

NO.	REVISIONS	DATE	BY

CIP NO. 1920R004

INDEX NO. D-XXXXX

ProjectLine Technical Services, Inc

carollo

CITY OF LOS ANGELES

	DESIGN GROUP	DATE
ENGINEER:	ROBERT GETTER	01/22/2026
ARCHITECT:		
DESIGNED BY:	HENRY LUONG	01/22/2026
DRAWN BY:	CHARLEY KHUU / PAVEL PETIN	01/22/2026
CHECKED BY:	ROBERT GETTER ROBERT MORRONI	01/22/2026
APPROVED BY:	ROBERT GETTER	01/22/2026

WORK ORDER
S33WMLRP, S043MSWC, S343MSWC

SHEET NAME
MD302

SHEET 60 OF 108 SHEETS

SHEET VERSION 4.0.1 FILE PATH: C:\PW_WORKING\CAROLLO_200000\D0225921\203818MD302.DWG PLOT DATE: 1/15/2026 3:57 PM SAVED: 1/15/2026 3:50 PM SAVED BY:CHARLEY

FINAL DESIGN SUBMITTAL



1 MD102 PRESSURE FILTERS DEMOLITION

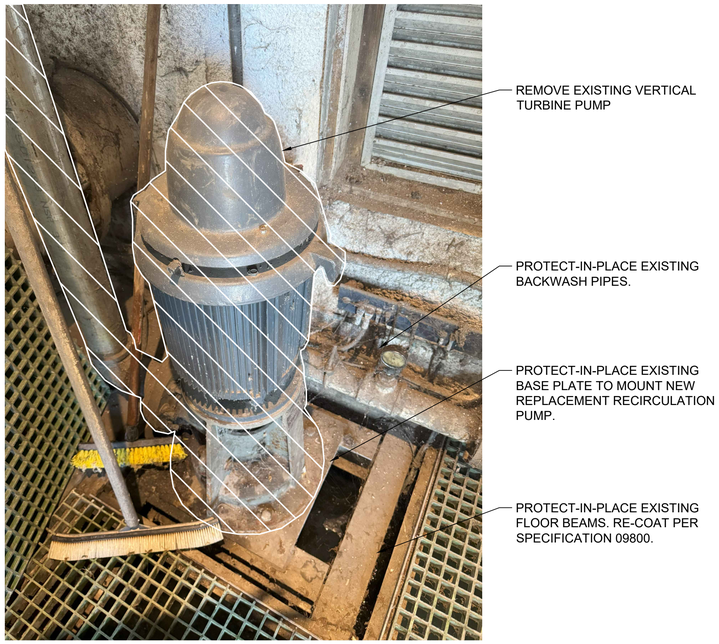

2 MD102 IRRIGATION PUMP DEMOLITION



3 MD102 DISINFECTION UNIT DEMOLITION

NOTES:

1. REMOVE ALL CONCRETE PADS AND ANCHOR BOLTS FOR EQUIPMENT BEING DEMOLISHED. SUBMIT REPAIR PLAN FOR LEAVING SMOOTH CONCRETE SLAB WALKING SURFACES, TYP.
2. REPAIR SURFACES AS NEEDED AFTER DEMO TO MATCH EXISTING ADJACENT SURFACES.

ENGINEERING
CITY OF LOS ANGELES
Environmental Engineering Division

THIS PLAN WAS ELECTRONICALLY SIGNED AND STAMPED

REGISTERED PROFESSIONAL ENGINEER ROBERT D. GETTER No. M 30752 EXP. 09-30-26 MECHANICAL CALIFORNIA

BUREAU OF ENGINEERING

VERTICAL CONTROL:
HORIZONTAL CONTROL:

SHEET TITLE: DEMOLITION PUMP HOUSE PHOTO DETAILS
PROJECT: MACARTHUR LAKE STORMWATER CAPTURE PROJECT
ADDRESS: MACARTHUR PARK 2230 6TH ST LOS ANGELES CA 90057

DEPARTMENT OF PUBLIC WORKS

NO.	REVISIONS	DATE	BY

CIP NO. 1920R004

INDEX NO. D-XXXXX

CITY OF LOS ANGELES

	DESIGN GROUP	DATE
ENGINEER:	ROBERT GETTER	01/22/2026
ARCHITECT:		
DESIGNED BY:	HENRY LUONG	01/22/2026
DRAWN BY:	CHARLEY KHUU / PAVEL PETIN	01/22/2026
CHECKED BY:	ROBERT GETTER ROBERT MORRONI	01/22/2026
APPROVED BY:	ROBERT GETTER	01/22/2026

WORK ORDER S33WMLRP, S043MSWC, S343MSWC

SHEET NAME MD801

SHEET 61 OF 108 SHEETS

ProjectLine Technical Services, Inc

carollo

THE CITY OF LOS ANGELES OR ITS OFFICERS OR AGENTS SHALL NOT BE RESPONSIBLE FOR THE ACCURACY OR COMPLETENESS OF ELECTRONIC COPIES OF THIS PLAN SHEET.

REVISION DATES (DESIGN STAGE ONLY)

SHEET VERSION 4.0.1 FILE PATH: C:\PW_WORKING\CAROLLO_200000\D0225921\203818MD801.DWG PLOT DATE: 1/15/2026 3:57 PM SAVED: 1/15/2026 3:50 PM SAVED BY:CHARLEY

FINAL DESIGN SUBMITTAL

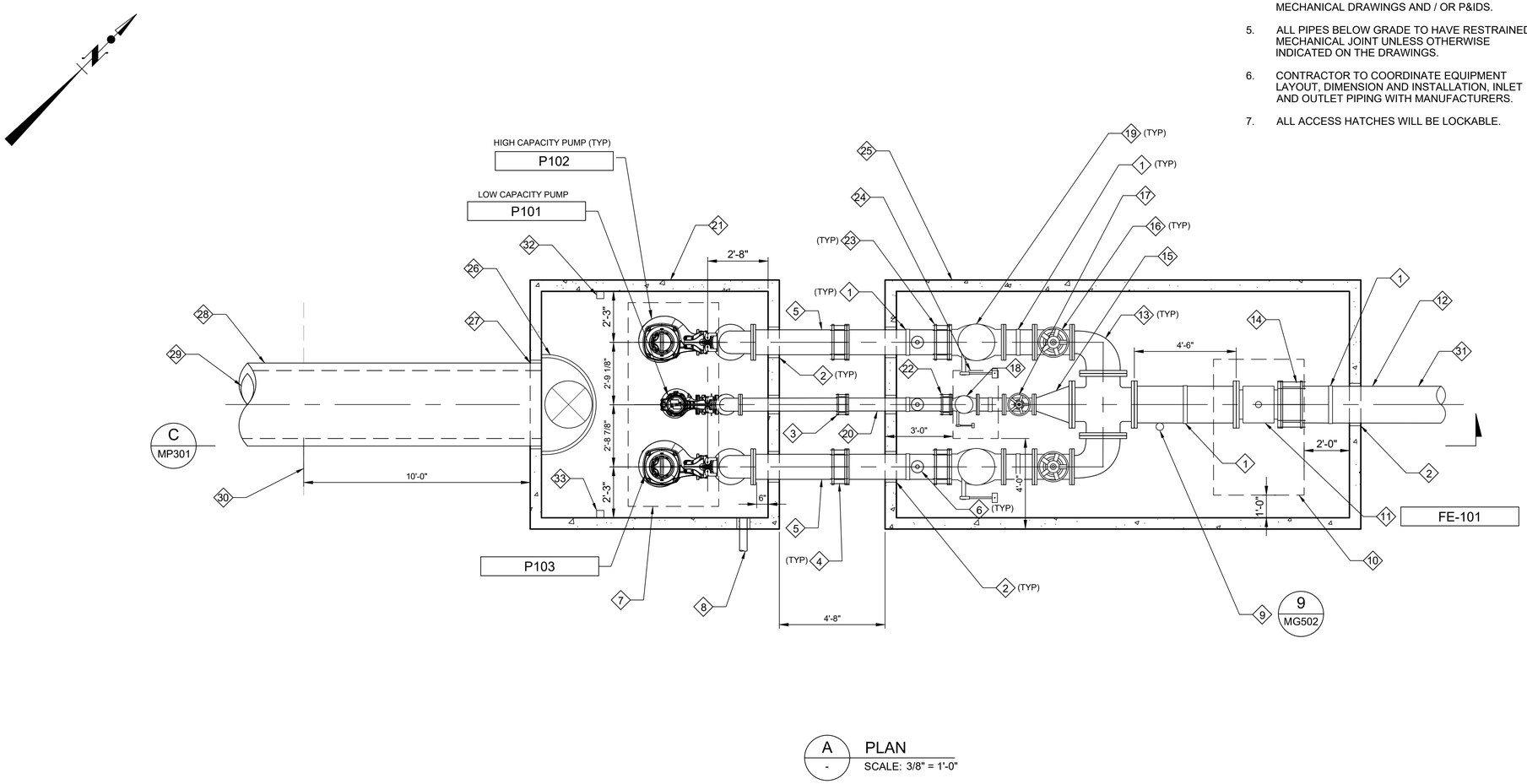

A
-
PLAN
SCALE: 3/8" = 1'-0"

NOTES:

1. SEE CIVIL DRAWINGS FOR CONTINUATION OF YARD PIPING.
2. SEE P&ID DRAWING FOR INSTRUMENTATION DETAILS.
3. NOT ALL REQUIRED PIPE SUPPORTS ARE SHOWN. SEE SPECIFICATION FOR ADDITIONAL PIPE SUPPORT REQUIREMENTS.
4. CONTRACTOR IS RESPONSIBLE FOR PROVIDING ALL GAUGES, INSTRUMENTATION, SAMPLE, OR OTHER PENETRATIONS AS REQUIRED BY THE MECHANICAL DRAWINGS AND / OR P&IDS.
5. ALL PIPES BELOW GRADE TO HAVE RESTRAINED MECHANICAL JOINT UNLESS OTHERWISE INDICATED ON THE DRAWINGS.
6. CONTRACTOR TO COORDINATE EQUIPMENT LAYOUT, DIMENSION AND INSTALLATION, INLET AND OUTLET PIPING WITH MANUFACTURERS.
7. ALL ACCESS HATCHES WILL BE LOCKABLE.

KEY NOTES:

1. PIPE SUPPORT PER DETAIL 4 ON DRAWING MG501.
2. WALL PENETRATION PER DETAIL 7 ON DRAWING MG502.
3. 6" RESTRAINED FLEXIBLE COUPLING WITH STAINLESS STEEL HARDWARE AND WRAPPED PER DETAIL 6 ON DRAWING MG502.
4. 12" RESTRAINED FLEXIBLE COUPLING WITH STAINLESS STEEL HARDWARE AND WRAPPED PER DETAIL 6 ON DRAWING MG502.
5. 12" SW (DIP), SEE PIPE SCHEDULE ON SHEET MG601.
6. 2" AIR/VAC VALVE PER DETAIL 8 ON DRAWING MG502.
7. 9'-0" X 4'-0" ACCESS HATCH WITH 4'-6" X 4'-0" HINGED DOORS, H35 TRAFFIC RATED. INTEGRATED HINGED SAFETY GRATING FALL PROTECTION BENEATH EACH DOOR, PER USF FABRICATORS OR EQUAL.
8. 4" SCH 80 PVC VENT PIPE, SEE CIVIL DRAWING FOR CONTINUATION.
9. PRESSURE TRANSMITTER.
10. 6'-0" X 4'-0" H35 TRAFFIC RATED HATCH COVER PER BILCO OR APPROVED EQUAL, SEE CIVIL PLANS FOR ELEVATION.
11. 18" MAGNETIC FLOW METER.
12. 18" SW (SIP), SEE PIPE SCHEDULE ON DRAWING MG601.
13. 18" X 12" REDUCING 90° BEND.
14. 18" RESTRAINED FLANGE COUPLING ADAPTER.
15. 18" X 6" ECCENTRIC REDUCER.
16. 12" GATE VALVE.
17. 6" GATE VALVE.
18. 6" SWING CHECK VALVE.
19. 12" SWING CHECK VALVE.
20. 6" SW (DIP), SEE PIPE SCHEDULE ON DRAWING MG601.
21. H20 RATED PRECAST WETWELL AND PUMP STATION VAULT 10'-0" X 10'-0" INTERIOR PER JENSEN PRECAST OR EQUAL.
22. 6" RESTRAINED FLANGE COUPLING ADAPTER.
23. 12" RESTRAINED FLANGE COUPLING ADAPTER.
24. 2'-0" X 3'-0" H35 TRAFFIC RATED HATCH COVER BILCO OR APPROVED EQUAL, SEE CIVIL PLANS FOR RIM ELEVATION.
25. H20 RATED PRECAST VALVE AND METER VAULT, 10'-0 X 20'-0" INTERIOR PER JENSEN PRECAST OR EQUAL.
26. 48" DROP BOWL WITH FORCE LINE HOOD PER RELINER-DURAN INC OR APPROVED EQUAL. DROP BOWL TO BE INSTALLED PER MANUFACTURER'S RECOMMENDATIONS.
27. WALL PENETRATION TO BE COORDINATED WITH PRECAST VAULT MANUFACTURER.
28. 36" SW (RCP), SEE PIPE SCHEDULE ON DRAWING MG601.
29. FROM PRE-TREATMENT UNIT, SEE CIVIL DRAWINGS FOR PIPING CONTINUATION.
30. 10'-0" MINIMUM PIPE DISTANCE BETWEEN PRE-TREATMENT UNIT AND PUMP STATION.
31. FOR PIPING CONTINUATION SEE CIVIL DRAWINGS.
32. FOR FLOAT SWITCH MOUNTING SEE DETAIL E-19 ON DRAWING EP016.
33. FOR ULTRASONIC LEVEL TRANSMITTER SEE DETAIL E-20 ON DRAWING EP017.

carollo

ENGINEERING
CITY OF LOS ANGELES
Environmental Engineering Division

THIS PLAN WAS ELECTRONICALLY SIGNED AND STAMPED

REGISTERED PROFESSIONAL ENGINEER CHRISTINE SCHMITT No. 84039 CIVIL STATE OF CALIFORNIA JULIA

BUREAU OF ENGINEERING

VERTICAL CONTROL:
HORIZONTAL CONTROL:

SHEET TITLE: LAKE STREET DIVERSION STRUCTURES PUMP STATION PLAN

PROJECT: MACARTHUR LAKE STORMWATER CAPTURE PROJECT

ADDRESS: MACARTHUR PARK 2230 6TH ST LOS ANGELES CA 90057

DEPARTMENT OF PUBLIC WORKS

NO	REVISIONS	BY	DATE

CIP NO. 1920R004

INDEX NO. D-XXXXX

CITY OF LOS ANGELES

DESIGN GROUP	DATE
ENGINEER: RYLEE MOWRER	09/27/2023
ARCHITECT:	
DESIGNED BY: RYLEE MOWRER	09/27/2023
DRAWN BY: PERRY CHESEBRO	09/27/2023
CHECKED BY: KIRK GARDINER	03/14/2024
APPROVED BY: JULIA C. SCHMITT	07/16/2024

WORK ORDER
S33WMLRP, S043MSWC, S343MSWC

SHEET NAME
MP101

SHEET 62 OF 108 SHEETS

REVISION DATES (DESIGN STAGE ONLY)

THE CITY OF LOS ANGELES OR ITS OFFICERS OR AGENTS SHALL NOT BE RESPONSIBLE FOR THE ACCURACY OR COMPLETENESS OF ELECTRONIC COPIES OF THIS PLAN SHEET.

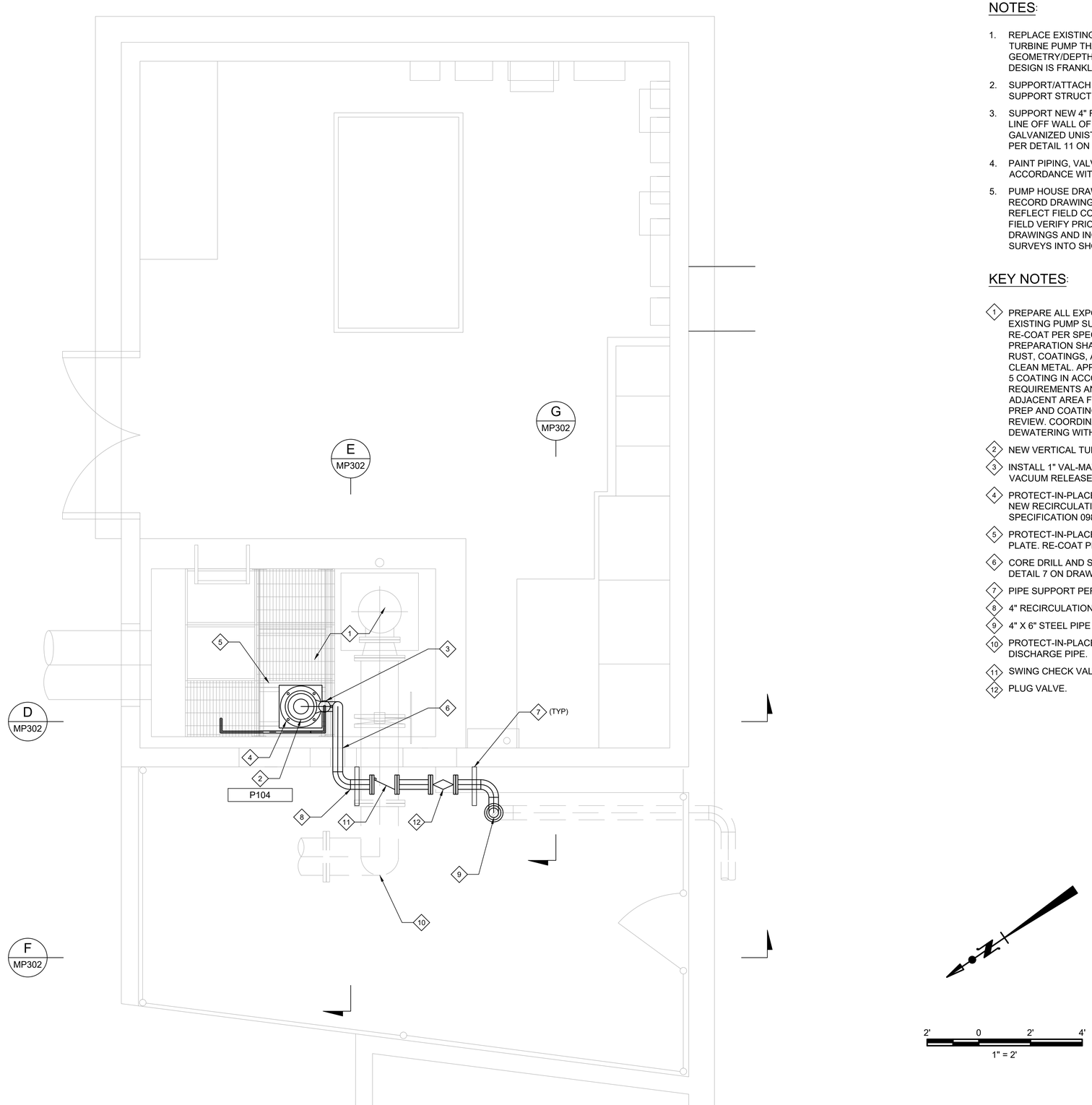

NOTES:

1. REPLACE EXISTING PUMP WITH NEW VERTICAL TURBINE PUMP THAT MATCHES EXISTING PUMP GEOMETRY/DEPTH FROM PLATFORM. BASIS FOR DESIGN IS FRANKLIN WATER PUMP MODEL FVT-8FHC.
2. SUPPORT/ATTACH NEW PUMP TO EXISTING PUMP SUPPORT STRUCTURAL STEEL OVER WETWELL.
3. SUPPORT NEW 4" RECIRCULATION PUMP DISCHARGE LINE OFF WALL OF PUMP HOUSE ON HOT-DIP GALVANIZED UNISTRUT AND MOUNTING HARDWARE PER DETAIL 11 ON DRAWING MG503.
4. PAINT PIPING, VALVES, AND PIPE SUPPORTS IN ACCORDANCE WITH SECTION 09800.
5. PUMP HOUSE DRAWINGS ARE BASED ON CITY RECORD DRAWINGS AND MAY NOT ACCURATELY REFLECT FIELD CONDITIONS. CONTRACTOR SHALL FIELD VERIFY PRIOR TO SUBMITTING SHOP DRAWINGS AND INCORPORATE RESULTS OF FIELD SURVEYS INTO SHOP DRAWINGS.

KEY NOTES:

1. PREPARE ALL EXPOSED METAL SURFACES OF EXISTING PUMP SUPPORT BEAMS AND BASEPLATE RE-COAT PER SPECIFICATION 09800. SURFACE PREPARATION SHALL REMOVE ALL MILL SCALE, RUST, COATINGS, AND FOREIGN MATTER TO EXPOSE CLEAN METAL. APPLY SPECIFICATION 09800 SYSTEM 5 COATING IN ACCORDANCE WITH MANUFACTURER'S REQUIREMENTS AND RECOMMENDATIONS. PROTECT ADJACENT AREA FROM DAMAGE DURING SURFACE PREP AND COATING. SUBMIT DETAILED PLAN FOR REVIEW. COORDINATE WETWELL ISOLATION AND DEWATERING WITH RAP CITY STAFF.
2. NEW VERTICAL TURBINE PUMP. SEE SECTION 11430.
3. INSTALL 1" VAL-MATIC #101ST OR EQUAL AIR/ VACUUM RELEASE VALVE.
4. PROTECT-IN-PLACE BASE PLATE FOR MOUNTING NEW RECIRCULATION PUMP P-104. RE-COAT PER SPECIFICATION 09800.
5. PROTECT-IN-PLACE BEAMS SUPPORTING BASE PLATE. RE-COAT PER SPECIFICATION 09800.
6. CORE DRILL AND SEAL WALL PENETRATIONS PER DETAIL 7 ON DRAWING MG502.
7. PIPE SUPPORT PER DETAIL 10 ON DRAWING MG503.
8. 4" RECIRCULATION PUMP DISCHARGE LINE.
9. 4" X 6" STEEL PIPE REDUCER.
10. PROTECT-IN-PLACE EXISTING 16" FOUNTAIN PUMP DISCHARGE PIPE.
11. SWING CHECK VALVE.
12. PLUG VALVE.

ENGINEERING
CITY OF LOS ANGELES
Environmental Engineering Division

THIS PLAN WAS ELECTRONICALLY SIGNED AND STAMPED

REGISTERED PROFESSIONAL ENGINEER ROBERT D. GETTER No. M 30752 EXP. 09-30-26 MECHANICAL STATE OF CALIFORNIA

BUREAU OF ENGINEERING

VERTICAL CONTROL:
HORIZONTAL CONTROL:

SHEET TITLE: PUMP HOUSE MECHANICAL PIPING PLAN
PROJECT: MACARTHUR LAKE STORMWATER CAPTURE PROJECT
ADDRESS: MACARTHUR PARK 2230 6TH ST LOS ANGELES CA 90057

DEPARTMENT OF PUBLIC WORKS

NO.	REVISIONS	DATE	BY

CIP NO. 1920R004

INDEX NO. D-XXXXX

CITY OF LOS ANGELES

	DESIGN GROUP	DATE
ENGINEER:	ROBERT GETTER	01/22/2026
ARCHITECT:		
DESIGNED BY:	HENRY LUONG	01/22/2026
DRAWN BY:	CHARLEY KHUU / PAVEL PETIN	01/22/2026
CHECKED BY:	ROBERT GETTER ROBERT MORRONI	01/22/2026
APPROVED BY:	ROBERT GETTER	01/22/2026

ProjectLine Technical Services, Inc

carollo

WORK ORDER S33WMLRP, S043MSWC, S343MSWC

SHEET NAME
MP102
SHEET 63 OF 108 SHEETS

THE CITY OF LOS ANGELES OR ITS OFFICERS OR AGENTS SHALL NOT BE RESPONSIBLE FOR THE ACCURACY OR COMPLETENESS OF ELECTRONIC COPIES OF THIS PLAN SHEET.

REVISION DATES (DESIGN STAGE ONLY)

SHEET VERSION 4.0.1 FILE PATH: C:\PW_WORKING\CAROLLO_200000\D0225921\203818MP102.DWG PLOT DATE: 1/15/2026 3:57 PM SAVED: 1/15/2026 3:50 PM SAVED BY:CHARLEY

FINAL DESIGN SUBMITTAL

THE CITY OF LOS ANGELES OR ITS OFFICERS OR AGENTS SHALL NOT BE RESPONSIBLE FOR THE ACCURACY OR COMPLETENESS OF ELECTRONIC COPIES OF THIS PLAN SHEET.

NOTES:

1. SEE CIVIL DRAWINGS FOR CONTINUATION OF YARD PIPING.
2. SEE P&ID DRAWING FOR INSTRUMENTATION DETAILS.
3. NOT ALL REQUIRED PIPE SUPPORTS ARE SHOWN. SEE SPECIFICATION FOR ADDITIONAL PIPE SUPPORT REQUIREMENTS.
4. CONTRACTOR IS RESPONSIBLE FOR PROVIDING ALL GAUGES, INSTRUMENTATION, SAMPLE, OR OTHER PENETRATIONS AS REQUIRED BY THE MECHANICAL DRAWINGS AND / OR P&IDS.
5. ALL PIPES BELOW GRADE TO HAVE RESTRAINED MECHANICAL JOINT UNLESS OTHERWISE INDICATED ON THE DRAWINGS.
6. CONTRACTOR TO COORDINATE EQUIPMENT LAYOUT, DIMENSION AND INSTALLATION, INLET AND OUTLET PIPING WITH MANUFACTURERS.

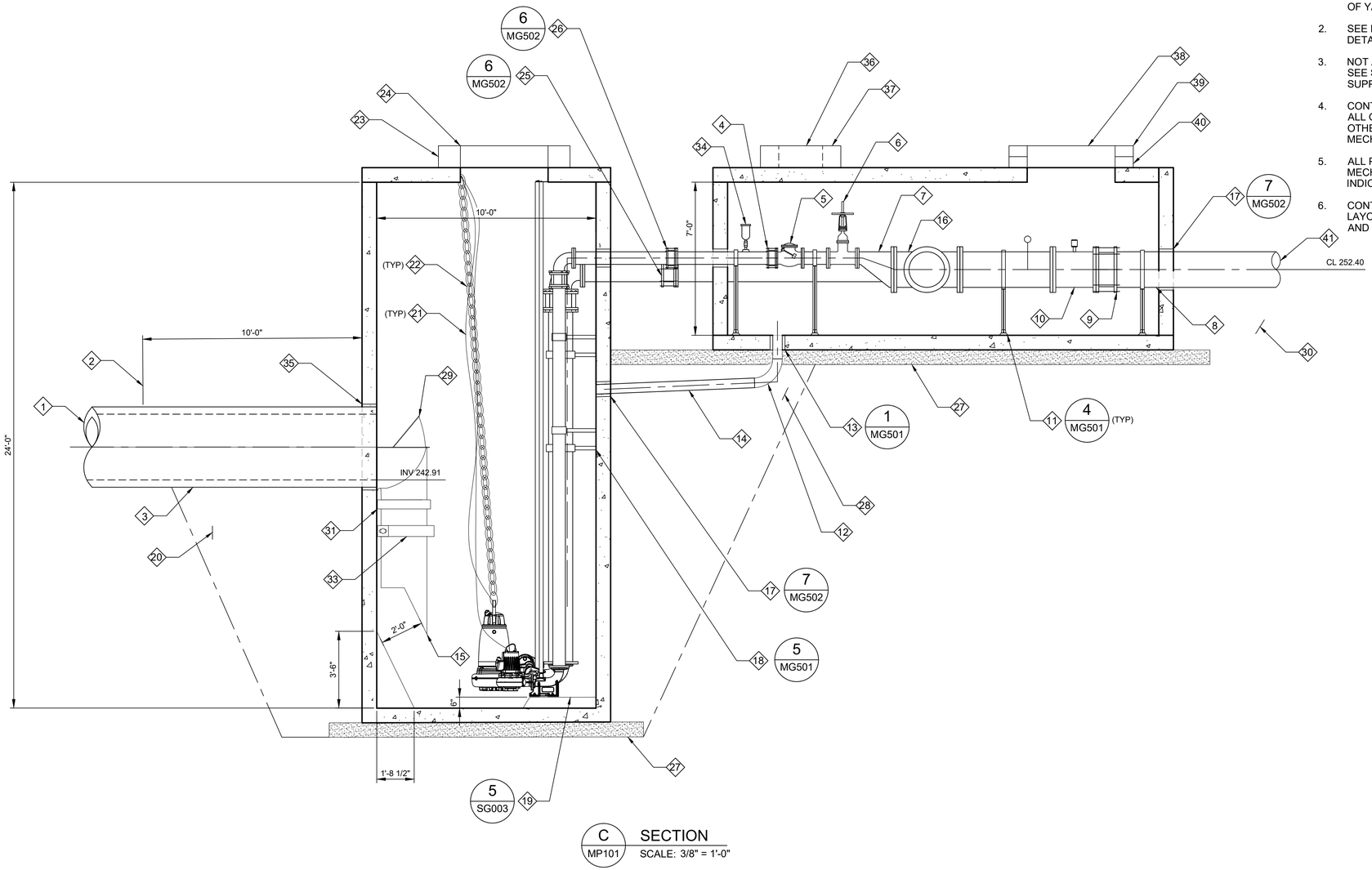

C MP101 SECTION
SCALE: 3/8" = 1'-0"

KEY NOTES:

1. FROM PRE-TREATMENT UNIT, SEE CIVIL DRAWINGS FOR PIPING CONTINUATION.
2. 10'-0" MINIMUM PIPE DISTANCE BETWEEN PRE-TREATMENT UNIT AND PUMP STATION MANHOLE.
3. 36" SW (RCP).
4. 6" RESTRAINED FLANGE COUPLING ADAPTER.
5. 6" SWING CHECK VALVE.
6. 6" GATE VALVE, NON-RISING STEM.
7. 18" X 6" ECCENTRIC REDUCER.
8. 18" SW (DIP).
9. 18" RESTRAINED FLANGE COUPLING ADAPTER.
10. 18" MAGNETIC FLOW METER.
11. PIPE SUPPORT.
12. 4" - 90° LONG RADIUS ELBOW. BELL AND SPIGOT CONNECTIONS ON ALL DRAIN LINE CONNECTIONS.
13. DRAIN.
14. 4" DR (PVC) PIPE TO PUMP WETWELL. MIN 2% SLOPE.
15. 24" SDR 36 PVC DROP PIPE. CUT PIPE TO FOLLOW ANGLE OF FILLET.
16. 18" X 18" CROSS.
17. WALL PENETRATION.
18. PIPE SUPPORT.
19. EQUIPMENT PEDESTAL WITH ADHESIVE DOWELS.
20. SLURRY BACKFILL WITH LIMITS OF EXCAVATION TO SPRINGLINE.
21. POWER CABLE.
22. 316 STAINLESS STEEL LIFTING CHAIN.
23. 1'-0" HATCH RISER PER JENSEN PRECAST OR EQUAL FOR 9'-0 X 4'-0" HATCH.
24. 9'-0" X 4'-0" ACCESS HATCH WITH 4'-6" X 4'-0" HINGED DOORS, H20 TRAFFIC RATED. INTEGRATED HINGED SAFETY GRATING FALL PROTECTION BENEATH EACH DOOR, PER USF FABRICATORS OR EQUAL.
25. 12" RESTRAINED FLEXIBLE COUPLING WITH STAINLESS STEEL HARDWARE AND WRAPPED.
26. 6" RESTRAINED FLEXIBLE COUPLING WITH STAINLESS STEEL HARDWARE AND WRAPPED.
27. 6" CRUSHED AGGREGATE BASE, COMPACT PER SPEC 2310.
28. SLURRY BACKFILL WITH LIMITS OF EXCAVATION BELOW VAULT.
29. 48" DROP BOWL WITH FORCE LINE HOOD PER RELINER-DURAN INC OR APPROVED EQUAL. DROP BOWL TO BE INSTALLED PER MANUFACTURER'S RECOMMENDATIONS.
30. STRUCTURAL BACKFILL PER SPEC 2310.
31. FLEXIBLE PIPE COUPLING PER FERNCO, FLEXIBLE COUPLING OR EQUAL.
32. 6'-0" X 4'-0" H20 TRAFFIC RATED HATCH COVER PER BILCO OR APPROVED EQUAL, SEE CIVIL PLANS FOR RIM ELEVATION.
33. 316 STAINLESS STEEL STRAPS WITH STAINLESS STEEL FASTENERS PER RELINE-DURAN INC OR EQUAL.
34. 2" AIR/VAC VALVE.
35. PIPE PENETRATION TO BE COORDINATED WITH PRECAST VAULT MANUFACTURER.
36. 2'-0" X 3'-0" H20 TRAFFIC RATED HATCH COVER BILCO OR APPROVED EQUAL. SEE CIVIL PLANS FOR RIM ELEVATION.
37. 1'-0" HATCH RISER FOR 2'-0" X 3'-0" HATCH PER JENSEN PRECAST OR EQUAL.
38. 6'-0" X 4'-0" H20 TRAFFIC RATED HATCH COVER BILCO OR APPROVED EQUAL. SEE CIVIL PLANS FOR ROM ELEVATION.
39. 1'-0" HATCH RISER FOR 6'-0" X 4'-0" HATCH PER JENSEN PRECAST OR EQUAL.
40. 6" HATCH RISER FOR 6'-0" X 4'-0" HATCH PER JENSEN PRECAST OR EQUAL.
41. FOR PIPING CONTINUATION SEE CIVIL DRAWINGS.

REVISION DATES (DESIGN STAGE ONLY)

ENGINEERING
CITY OF LOS ANGELES
Environmental Engineering Division

THIS PLAN WAS ELECTRONICALLY SIGNED AND STAMPED

REGISTERED PROFESSIONAL ENGINEER JULIA SCHMITT No. 84039 CIVIL STATE OF CALIFORNIA
JULIA C. SCHMITT
Digitally signed by Julia Christine Schmitt
DN: cn=Julia Christine Schmitt, o=City of Los Angeles, ou=Bureau of Engineering, email=julia.schmitt@lacity.org, c=US
Date: 2024.07.16 14:37:04 -07'00'

BUREAU OF ENGINEERING
VERTICAL CONTROL:
HORIZONTAL CONTROL:
SHEET TITLE: LAKE STREET DIVERSION STRUCTURES PUMP STATION SECTION
PROJECT: MACARTHUR LAKE STORMWATER CAPTURE PROJECT
ADDRESS: MACARTHUR PARK 2230 6TH ST LOS ANGELES CA 90057

DEPARTMENT OF PUBLIC WORKS
CITY OF LOS ANGELES

NO	REVISIONS	DATE	BY

CIP NO. 1920R004
INDEX NO. D-XXXXX

DESIGN GROUP	DATE
ENGINEER: RYLEE MOWRER	09/27/2023
ARCHITECT:	
DESIGNED BY: RYLEE MOWRER	09/27/2023
DRAWN BY: PERRY CHESEBRO	09/27/2023
CHECKED BY: KIRK GARDINER	03/14/2024
APPROVED BY: JULIA C. SCHMITT	07/16/2024

WORK ORDER S33WMLRP, S043MSWC, S343MSWC

SHEET NAME
MP301
SHEET 64 OF 108 SHEETS

carollo

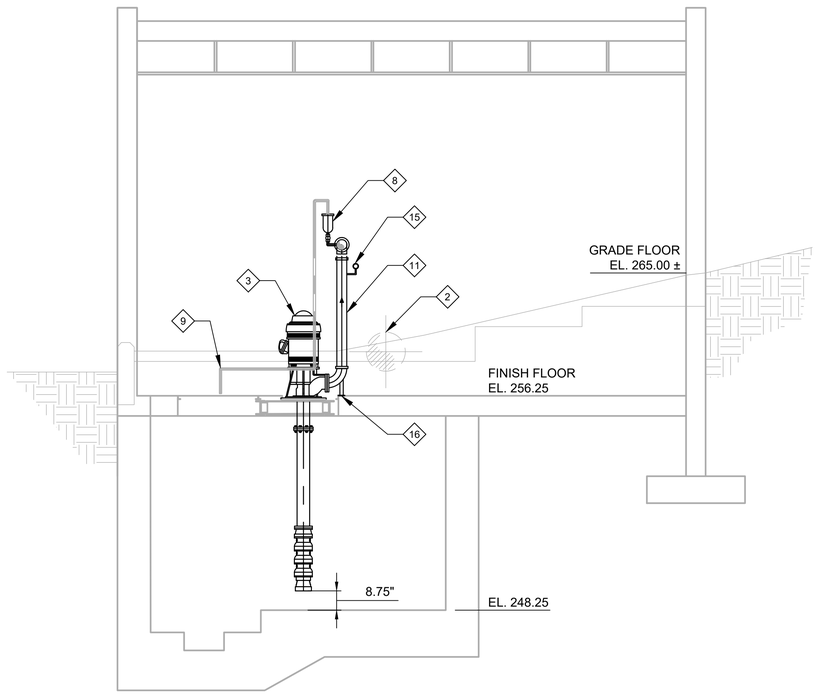

D MP102 SECTION
SCALE: 3/8" = 1'-0"

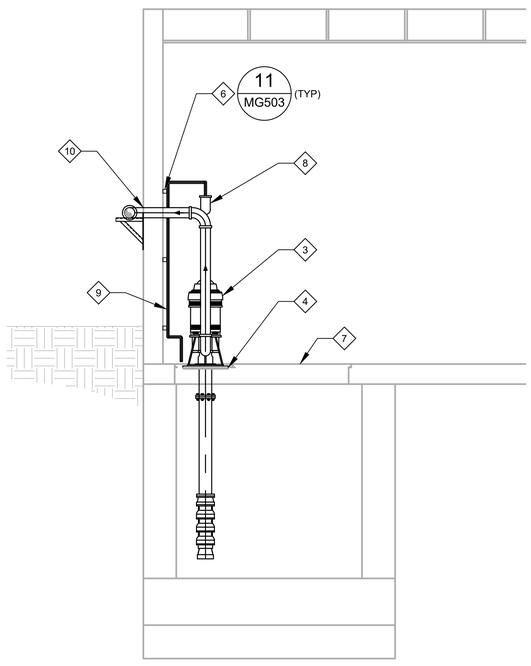

E MP102 SECTION
SCALE: 3/8" = 1'-0"

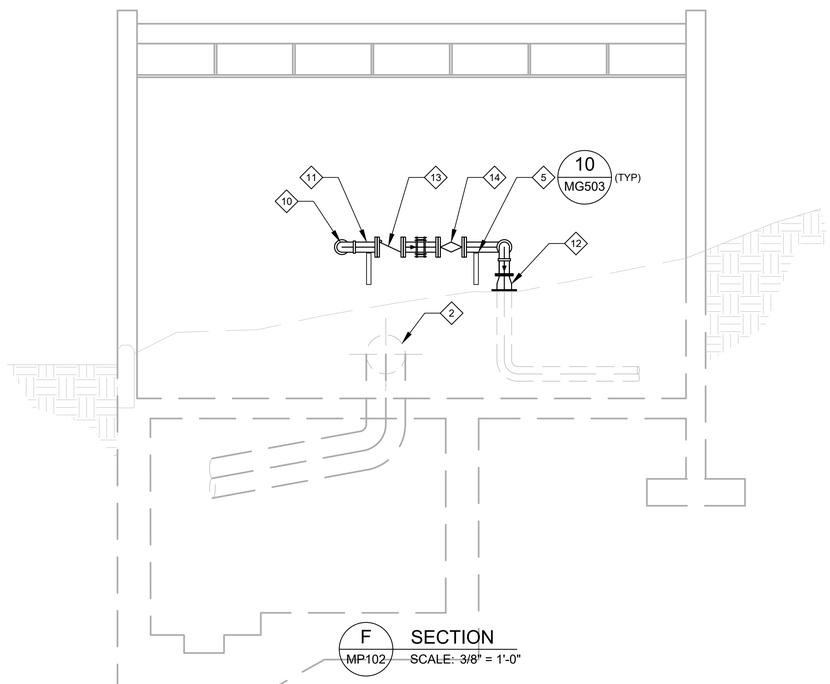

F MP102 SECTION
SCALE: 3/8" = 1'-0"

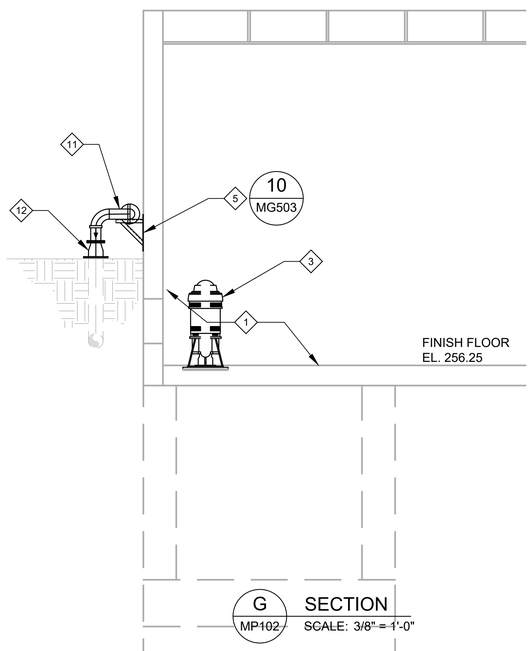

G MP102 SECTION
SCALE: 3/8" = 1'-0"

NOTES:

1. REPLACE EXISTING PUMP WITH NEW VERTICAL TURBINE PUMP THAT MATCHES EXISTING PUMP GEOMETRY/DEPTH FROM PLATFORM. BASIS FOR DESIGN IS FRANKLIN WATER PUMP MODEL FVT-8FHC.
2. SUPPORT/ATTACH NEW PUMP TO EXISTING PUMP SUPPORT STRUCTURAL STEEL OVER WETWELL.
3. SUPPORT NEW 1" RECIRCULATION PUMP DISCHARGE LINE OFF WALL OF PUMP HOUSE ON HOT-DIP GALVANIZED UNISTRUT AND MOUNTING HARDWARE PER DETAIL 11 ON DRAWING MG503.
4. INSTALL 1" VAL-MATIC #101ST OR EQUAL AIR RELEASE VALVE.
5. NOT ALL REQUIRED PIPE SUPPORTS ARE SHOWN SEE SPECIFICATION FOR ADDITIONAL PIPE SUPPORT REQUIREMENTS.
6. CONTRACTOR IS RESPONSIBLE FOR PROVIDING ALL GAUGES, INSTRUMENTATION, AND APPURTENANCES AS REQUIRED BY THE MECHANICAL DRAWINGS AND SPECIFICATIONS.

KEY NOTES:

1. PREPARE ALL EXPOSED METAL SURFACES FOR RE-COATING PER SPECIFICATION 09800. SURFACE PREPARATION SHALL REMOVE ALL MILL SCALE, RUST, COATINGS, AND FOREIGN MATTER TO EXPOSE CLEAN METAL. APPLY SPECIFICATION 09800 SYSTEM 5 COATING IN ACCORDANCE WITH MANUFACTURER'S REQUIREMENTS AND RECOMMENDATIONS. PROTECT ADJACENT AREA FROM DAMAGE DURING SURFACE PREP AND COATING.
2. CONTRACTOR SHALL POTHOLE TO VERIFY LOCATION OF EXISTING 18" FOUNTAIN PIPE PRIOR TO CONSTRUCTION, AND PROTECT-IN-PLACE.
3. NEW VERTICAL TURBINE PUMP.
4. EXISTING BASE PLATE TO MOUNT TURBINE PUMP.
5. WALL BRACKET PIPE SUPPORT.
6. WALL MOUNTED UNISTRUT PIPE SUPPORT.
7. EXISTING GRATE TO WETWELL.
8. 1" AIR/VAC VALVE PER DETAIL 8 ON DRAWING MG502.
9. 1" DRAIN PIPE.
10. WALL PENETRATION PER DETAIL 8 ON DRAWING MG502.
11. 4" PIPE CONNECTING TO EXISTING 6" TERRACE GARDEN PIPE.
12. 4" X 6" STEEL REDUCER.
13. SWING CHECK VALVE.
14. PLUG VALVE.
15. PRESSURE GAUGE.
16. CONTRACTOR SHALL PROVIDE ELBOW PIPE BASE SUPPORT. FIELD VERIFY ALL DIMENSIONS, ELEVATIONS, AND SITE CONDITIONS PRIOR TO FABRICATION. SUBMIT SHOP DRAWING FOR REVIEW PRIOR TO FABRICATION AND INSTALLATION.

ProjectLine
Technical Services, Inc

carollo

ENGINEERING
CITY OF LOS ANGELES
Environmental Engineering Division

• THIS PLAN WAS ELECTRONICALLY SIGNED AND STAMPED •

REGISTERED PROFESSIONAL ENGINEER
ROBERT D. GETTER
No. M 30352
EXP. 09-30-25
MECHANICAL

BUREAU OF ENGINEERING

VERTICAL CONTROL:
HORIZONTAL CONTROL:

SHEET TITLE: PUMP HOUSE SECTIONS
PROJECT: MACARTHUR LAKE STORMWATER CAPTURE PROJECT
ADDRESS: MACARTHUR PARK
2230 6TH ST LOS ANGELES CA 90057

DEPARTMENT OF PUBLIC WORKS

NO.	REVISIONS	DATE	BY

CIP NO. 1920R004
INDEX NO. D-XXXXX

CITY OF LOS ANGELES

DESIGN GROUP	DATE
ENGINEER: ROBERT GETTER	01/22/2026
ARCHITECT:	01/22/2026
DESIGNED BY: HENRY LUONG	01/22/2026
DRAWN BY: CHARLEY KHUU / PAVEL PETIN	01/22/2026
CHECKED BY: ROBERT GETTER	ROBERT MORRONI 01/22/2026
APPROVED BY: ROBERT GETTER	01/22/2026

WORK ORDER
S33WMLRP, S043MSWC, S343MSWC

SHEET NAME
MP302
SHEET 65 OF 108 SHEETS

THE CITY OF LOS ANGELES OR ITS OFFICERS OR AGENTS SHALL NOT BE RESPONSIBLE FOR THE ACCURACY OR COMPLETENESS OF ELECTRONIC COPIES OF THIS PLAN SHEET.

REVISION DATES (DESIGN STAGE ONLY)

SHEET VERSION 4.0.1 FILE PATH: C:\PW_WORKING\CAROLLO_200000\D0225921\203818MP302.DWG PLOT DATE: 1/15/2026 3:57 PM SAVED: 1/15/2026 3:50 PM SAVED BY:CHARLEY

FINAL DESIGN SUBMITTAL

A	AMPERE, AUTO, AMMETER	LACEC	LOS ANGELES CITY ELECTRICAL CODE
AC	ALTERNATING CURRENT		
AF	AMPERE FRAME SIZE OF CIRCUIT BREAKERS	M	MOTOR
AFF	ABOVE FINISHED FLOOR	MA	MILLIAMPERE
AMP	AMPERES, AMPERAGE	MAX	MAXIMUM
APPROX	APPROXIMATE	MCC	MOTOR CONTROL CENTER
ASYM	ASYMMETRIC, ASYMMETRICAL	MCP	MOTOR CIRCUIT PROTECTOR
AT	AMPERE TRIP	MECH	MECHANICAL
ATS	AUTOMATIC TRANSFER SWITCH	MR	MULTIPLE RATIO
AUTO	AUTOMATIC	MFR	MANUFACTURER
AUX	AUXILIARY	MH+	MOUNTING HEIGHT
AWG	AMERICAN WIRE GAUGE	MH	MAINTENANCE HOLE
		MIN	MINUTES, MINIMUM
BC	BARE COPPER	MISC	MISCELLANEOUS
BKR	BREAKER	MLO	MAIN LUGS ONLY
BLDG	BUILDING	MOV	MOTOR OPERATED VALVE
		MPC	MINI POWER CENTER
C	CONDUIT, CLOSED, CLOSING RELAY OR CONTACTOR	MS	MANUAL MOTOR STARTER
		MSDA	MAIN DISTRIBUTION SWITCHBOARD "A"
CAB	CABINET		
CAP	CAPACITOR, CAPACITY	MTG	MOUNTING
CAT	CATEGORY	MTR	MOTOR
CB	CIRCUIT BREAKER	(N)	NEW
CKT	CIRCUIT	N	NEUTRAL
CO	CONDUIT ONLY	NA	NON-AUTOMATIC
COAX	COAXIAL (CABLE)	NC	NORMALLY CLOSED, OR NEW CONDUIT
COMM	COMMUNICATION		
CONN	CONNECTION, CONNECTOR	NF	UNFUSED, NON-FUSED
CONT.	CONTINUATION	NO, NOS	NUMBER, NUMBERS
CP	CONTROL PANEL	NIC	NOT IN CONTRACT
CPT	CONTROL POWER TRANSFORMER	NTS	NOT TO SCALE
CR	CONTROL RELAY	NW	NEW WIRE
CS	CONTROL SWITCH		
CSI	CONTROL SYSTEM INTERFACE	OC	ON CENTER
CT	CONTROL TRANSFORMER	OD	OUTSIDE DIAMETER
CU	COPPER	OL	OVERLOAD RELAY
DBS	DEPARTMENT OF BUILDING AND SAFETY	P	POLE, POWER OR PRESSURE
		PB	PULL BOX, PUSHBUTTON
DC	DIRECT CURRENT	PB STA	PUSHBUTTON STATION
DIA	DIAMETER	PCM	PROCESS CONTROL MODULE
DIAG	DIAGRAM	PH,Ø	PHASE
DIM	DIMENSION	P & ID	PROCESS & INSTRUMENTATION DIAGRAM
DISC	DISCONNECT		
DISTR	DISTRIBUTION	PNL	PANEL
DN	DOWN	POS	POSITIVE
DS	DISCONNECT SWITCH	PM	POWER MONITOR
DWG	DRAWING	PMM	PROCESS MONITORING MODULE
		PS	PRESSURE SWITCH
EA	EACH	PSPDP	PARKING STRUCTURE POWER DISTRIBUTION PANEL
EG	ENGINE GENERATOR		
EL	ELEVATION (HEIGHT)	PT	POTENTIAL TRANSFORMER
ELEV	ELEVATION (VIEW)	PV	PHOTOVOLTAIC
EM	EMERGENCY	PVC	POLYVINYL CHLORIDE
EMLA	EMERGENCY LIGHTING PANEL "A"	PWR	POWER
EMT	ELECTRICAL METALLIC TUBING		
ENCL	ENCLOSURE	R	REACTOR OR RECTIFIER
EP	EXPLOSION PROOF	REC	RECEPTACLE
EQPT	EQUIPMENT	RECPTS	RECEPTACLES
ER	CONDUCTANCE LEVEL RELAY	REF	REFERENCE
EXIST		REQ'D	REQUIRED
ESM	ELECTRIC SERVICE REQUIREMENTS MANUAL	REV	REVERSE CONTACTOR COIL
		RGS	RIGID GALVANIZED STEEL
OR (E)	EXISTING	RM	ROOM
FA	FIRE ALARM	SBDB	STANDBY DISTRIBUTION BOARD
FACP	FIRE ALARM CONTROL PANEL	SEC	SECOND OR SECONDARY
FC	FOOT CANDLE	SC	SHORT CIRCUIT
FDR	FEEDER	SCH	SCHEDULE
FIG	FIGURE	SEC	SECONDS, SECONDARY
FIN	FINISHED	SECT	SECTION
FIXT	FIXTURE	SEL SW	SELECTOR SWITCH
FLEX	FLEXIBLE	SEQ	SEQUENCE
FLA	FULL LOAD AMPS	SHLD	SHIELDED
FT	FOOT	SHT	SHEET
FTG	FOOTING	SN	SOLID NEUTRAL
FUT	FUTURE	SOL	SOLENOID
		SP	SPARE
GALV	GALVANIZED	SPECS	SPECIFICATIONS
GEN	GENERATOR	SST	STAINLESS STEEL, TYPE 316
GFCI	GROUND FAULT CIRCUIT INTERRUPTERS	STA	STATION
		STD	STANDARD
GRD, GND	GROUND	STL	STEEL
		SV	SOLENOID VALVE
HOA	HAND - OFF - AUTOMATIC	SW	SWITCH
HP	HORSEPOWER	SWBD	SWITCHBOARD
HZ	HERTZ	SWGR	SWITCHGEAR
HGT	HEIGHT	SYMM	SYMMETRICAL
HV	HIGH VOLTAGE	SYS	SYSTEM
HS	HANDSWITCH		
		TB	TERMINATION BOX
IC	INTERRUPTING CAPACITY	TEMP	TEMPERATURE
ID	INSIDE DIAMETER	TERM	TERMINAL
I/O	INPUT/OUTPUT	TR	TRANSFORMER
INSTR	INSTRUMENT	TX	TRANSMITTER
		TYP	TYPICAL
JB	JUNCTION BOX		
		UG	UNDERGROUND
KCMIL	KILO-CIRCULAR MILS	UPS	UNINTERRUPTABLE POWER SUPPLY
KHZ	KILOHERTZ		
KV	KILOVOLT	UNO	UNLESS NOTED OTHERWISE
KVA	KILO VOLT AMPERE	UST	UNIT SUBSTATION
KVAR	KILOVAR		TRANSFORMER
KW	KILOWATT	V	VOLTAGE, VOLTS
		VA	VOLT-AMPS
LCP	LOCAL CONTROL PANEL	VD	VOLTAGE DROP
LOC	LOCAL	VFD	VARIABLE FREQUENCY DRIVE
LOS	LOCKOUT STOP	VSD	VARIABLE SPEED DRIVE
LFMC	LIQUID-TIGHT FLEXIBLE METAL CONDUIT	W	WATTS, WIRE
		WP	WEATHERPROOF
LS	LEVEL SWITCH	XFMR	TRANSFORMER
LTG	LIGHTING		

GENERAL NOTES

RACEWAYS

1. CONDUIT RUNS WHERE SHOWN ARE DIAGRAMMATIC, AND SHOULD BE RUN TO SUIT SITE CONDITIONS EXCEPT WHERE SHOWN DIMENSIONED ON THE DRAWINGS. THE RACEWAY SYSTEM SHALL COMPLY WITH ALL CODES, INCLUDING BUT NOT LIMITED TO:
   a. GROUNDING PER NEC ARTICLE 250
   b. CITY OF LA ELECTRICAL CODES, LA BUILDING CODES, AND PLAN CHECK REQUIREMENTS.
2. CONTRACTOR SHALL PROVIDE AND INSTALL ALL NECESSARY CONDUITS, FITTINGS, JUNCTION BOXES AND ALL NECESSARY COMPONENTS WHETHER SHOWN OR NOT ON THE DRAWINGS. TO MAKE ELECTRICAL INSTALLATION COMPLETE AND OPERATIONAL.
3. ELECTRICAL PANEL AND EQUIPMENT LOCATIONS SHALL BE PLACED TO SUIT FIELD CONDITIONS.
4. CONTRACTOR TO LIMIT THE NUMBER OF 90° BENDS BETWEEN PULL POINTS TO COMPLY WITH THE REQUIREMENTS OF THE CALIFORNIA ELECTRICAL SAFETY ORDERS, THE NATIONAL ELECTRICAL CODE AND THE LOS ANGELES CITY ELECTRICAL CODE.
5. PROVIDE 30" (MAXIMUM) LENGTH OF FLEXIBLE CONDUIT WHERE RIGID CONDUIT TERMINATES AT EQUIPMENT SUBJECT TO MOVEMENT FROM VIBRATION, EXPANSION AND CONTRACTION.
6. ELECTRICAL CONTRACTOR SHALL PROVIDE 316 SST STEEL SUPPORTS FOR ALL ELECTRICAL WORK (CONDUIT, PANELS, BOXES ETC.)
7. CONDUITS TERMINATED AT MOTOR CONTROL CENTER, SWITCHGEAR, CONTROL CABINETS, ETC. SHALL BE EQUIPPED WITH GROUNDING BUSHINGS AND SHALL BE EFFECTIVELY BONDED TO GROUNDING BUSES.
8. ALL OUTDOOR ELECTRICAL DEVICES AND ENCLOSURES SHALL BE WEATHERPROOF AND CORROSION RESISTANT (NEMA 4X OR 3R) ALL INDOOR DEVICES AND ENCLOSURES SHALL BE NEMA 12.
9. SWITCHGEAR, MOTOR CONTROL CENTERS, AND ALL OUTDOOR FREE STANDING CABINETS/PANELS SHALL BE SET ON A 4" HIGH MINIMUM CONCRETE PAD.
10. ALL SWITCHES, PULLBOXES, ETC. SHALL BE MOUNTED 48" ABOVE FLOOR SURFACES UNLESS NOTED OTHERWISE.
11. ALL BENDS IN CABLES SHALL BE MADE SO THAT THE PROTECTIVE COVERING OF THE CABLE WILL NOT BE INJURED. NO BEND SHALL HAVE A RADIUS LESS THAN THE MINIMUM RECOMMENDED BY THE CABLE MANUFACTURER.
12. MINIMUM SIZE OF CONDUIT INSTALLED ABOVE GRADE SHALL BE 3/4" UNLESS OTHERWISE NOTED.
13. ALL LIGHTING AND RECEPTACLE CIRCUITS SHALL INCLUDE 1#12 GROUND WIRE, UNLESS BRANCH CIRCUIT VOLTAGE DROP EXCEEDS 3%, GROUNDING WILL BE SIZED ACCORDINGLY PER PLAN.
14. ALL INDOOR CONDUITS AND FITTINGS SHALL BE RIGID GALVANIZED STEEL. USE RIGID STEEL CONDUIT, INCLUDING BUSHINGS, COUPLINGS, ELBOWS, NIPPLES, AND OTHER FITTINGS, GALVANIZED BY HOT-DIPPING, AND MEETING THE REQUIREMENTS OF ANSI C80.1, ANSI C80.4, UL, AND THE LAEC. DO NOT USE SETSCREW TYPE COUPLINGS, BUSHINGS, BENDS, NIPPLES, AND OTHER FITTINGS, UNLESS APPROVED BY THE ENGINEER OR THE INSPECTOR. FACTORY BENDS ARE NOT PERMITTED UNLESS APPROVED BY THE ENGINEER OR THE INSPECTOR.
15. REQUIRE ALL INSTALLED UNDERGROUND CONDUITS, ENCASED IN CONCRETE SHALL BE PVC SCHEDULE 40, AS A MINIMUM. ALL UNDERGROUND CONDUIT SHALL BE BURIED A MINIMUM OF 30 INCHES BELOW GRADE WITH TRACEABLE WARNING TAPE 12" ABOVE CONDUIT. SEE TYPICAL CONDUIT PLACEMENT IN TRENCH DETAIL.
16. ALL OUTDOOR CONDUITS AND FITTINGS, AND IN WETWELL, SHALL BE PVC-COATED RIGID CONDUIT.

CONDUCTORS

1. PROVIDE CONDUCTORS WITH TYPE THW OR TYPE THHN/THWN INSULATION, EXCEPT FOR SIZES NO. 6 AND LARGER SHALL HAVE WITH XHHW INSULATION.
2. ALL POWER AND CONTROL CABLES SHALL BE COPPER. NETWORK CABLES SHALL BE FIBER OPTIC CABLE WHERE SPECIFIED.
3. PROVIDE CABLE THAT IS UL LISTED TYPE TC AND CONFORMS TO THE REQUIREMENTS OF UL 1277 AND NEC ARTICLE 340, OR UL LISTED POWER LIMITED CIRCUIT CABLE THAT CONFORMS TO THE REQUIREMENTS OF ARTICLE 725 OF THE LAEC. PROVIDE CABLES PERMANENTLY AND LEGIBLY MARKED WITH THE MANUFACTURER'S NAME, THE MAXIMUM WORKING VOLTAGE FOR WHICH THE CABLE WAS TESTED, THE TYPE OF CABLE, AND LABELED UL (OR SUBMIT EVIDENCE OF UL LISTING).
4. ACCEPTABLE MANUFACTURERS: SOUTHWIRE, HOUSTON WIRE AND CABLE COMPANY, BELDEN ALPHA WIRE COMPANY, GENERAL CABLE OR EQUAL.

TYPE 1 (600 V, MULTICONDUCTOR CONTROL CABLE, A TWO-CONDUCTOR CABLE WITH GREEN GROUND CAN BE PROVIDED AS A POWER CABLE TO BRING POWER TO INSTRUMENTS, TYPE TC UV-RESISTANT):

1. GENERAL: MULTICONDUCTOR CONTROL CIRCUIT (OR INSTRUMENT POWER) INTERCONNECTION CABLE WITH GROUND SHALL BE SUITABLE FOR INSTALLATION IN OPEN AIR, IN CABLE TRAYS, CONDUIT OR OTHER RACEWAYS ACCEPTED BY THE ENGINEER. MAXIMUM CABLE TEMPERATURE RATING SHALL BE 90 DEGREES C DRY LOCATIONS, 75 DEGREES C WET LOCATIONS. CABLE SHALL PASS VERTICAL TRAY FLAME TEST.
2. INDIVIDUAL CONDUCTORS: 14 AWG, CLASS B STRANDED COATED OR UNCOATED COPPER.
3. INSULATION AND JACKETS: PROVIDE CONDUCTORS HAVING 15-MIL PVC INSULATION WITH 4MIL NYLON JACKET, AND UL-LISTED AS TYPE THHN/THWN. COLOR CODE THE CONDUCTOR GROUP IN ACCORDANCE WITH ICEA S-95-658, METHOD 1, TABLE E-2. INCLUDE ONE FULL SIZE GREEN EQUIPMENT GROUNDING CONDUCTOR. BIND CONDUCTOR GROUP WITH A SPIRAL WRAP OF BARRIER TAPE. PROVIDE CABLE WITH OVERALL OUTER PVC JACKET WHICH IS FLAME-RETARDANT, SUNLIGHT-AND OIL-RESISTANT.
4. 600V TWISTED PAIR CONTROL/ INSTRUMENT CABLE: MULTI TWISTED PAIR CABLE WITH OVER-ALL SHIELD. TYPE TC, 16 AWG STRANDED COPPER CONDUCTORS WITH OUTER PVC JACKET.

TYPE 2 (600 V, MULTICONDUCTOR POWER CABLE, TYPE TC):

1. GENERAL: 3 OR 4-CONDUCTOR, 12 AWG TO 4/0 AWG WITH GROUND AND OVERALL JACKET. SUITABLE FOR INSTALLATION IN OPEN AIR, IN CABLE TRAYS, CONDUIT, OR OTHER RACEWAYS ACCEPTED BY THE ENGINEER. MAXIMUM CABLE TEMPERATURE RATING SHALL BE 90 DEGREES C DRY LOCATIONS, 75 DEGREES C WET LOCATIONS.
2. INDIVIDUAL CONDUCTORS: CLASS B STRANDED, COATED, OR UNCOATED COPPER.
3. INSULATION AND JACKET: PROVIDE CONDUCTORS INSULATED WITH CROSS-LINKED POLYETHYLENE OR ETHYLENE-PROPYLENE, UL RATED VW-1. PROVIDE SUNLIGHT-AND OIL-RESISTANT PVC OUTER JACKET. PROVIDE PHASE CONDUCTORS COLOR-CODED RED, BLACK, AND BLUE. PROVIDE NEUTRAL CONDUCTOR COLOR-CODED WHITE WITH BLACK TRACER.

TYPE 3 (600 V, 16 AWG, TWISTED, SHIELDED PAIR INSTRUMENTATION CABLE, TYPE TC) (UL 62 AND UL 1277):

1. GENERAL: SINGLE-PAIR INSTRUMENTATION CABLE DESIGNED FOR PROCESS CONTROL, COMPUTER, OR DATA LOG APPLICATIONS. SUITABLE FOR INSTALLATION IN CABLE TRAYS, CONDUIT, OR OTHER RACEWAYS ACCEPTED BY THE ENGINEER. MAXIMUM CABLE TEMPERATURE RATING SHALL BE 90 DEGREES C DRY LOCATIONS, 75 DEGREES C WET LOCATIONS.
2. INDIVIDUAL CONDUCTORS: BARE SOFT ANNEALED COPPER, 7 CONDUCTOR, CLASS B STRANDED; 20 AWG, STRANDED, AND TINNED COPPER DRAIN WIRE.
3. INSULATION AND JACKET: EACH CONDUCTOR SHALL HAVE 15-MIL NOMINAL PVC AND 4-MIL NYLON INSULATION. PAIR CONDUCTORS SHALL BE PIGMENTED AS SHOWN IN THE CHART BELOW. JACKET SHALL BE FLAME-RETARDANT AND SUNLIGHT-AND OIL-RESISTANT PVC WITH 45-MIL NOMINAL THICKNESS. SHIELD SHALL BE 1.35-MIL ALUMINUM/MYLAR OVERLAPPED TO PROVIDE 100 PERCENT COVERAGE.

TYPE 4 (600 V, 16 AWG, TWISTED, SHIELDED TRIAD INSTRUMENTATION CABLE, TYPE TC) (UL 62 AND UL 1277):

1. GENERAL: SINGLE-TRIAD INSTRUMENTATION CABLE DESIGNED FOR PROCESS CONTROL, COMPUTER, OR DATA LOG APPLICATIONS. SUITABLE FOR INSTALLATION IN CABLE TRAY, CONDUIT, OR OTHER RACEWAYS ACCEPTED BY THE ENGINEER. MAXIMUM CABLE TEMPERATURE RATING SHALL BE 90 DEGREES C DRY LOCATIONS, 75 DEGREES C WET LOCATIONS.
2. CONDUCTORS: BARE SOFT ANNEALED COPPER, CLASS B STRANDED; 20 AWG, STRANDED, AND TINNED COPPER DRAIN WIRE.
3. INSULATION AND JACKET: EACH CONDUCTOR SHALL HAVE 15-MIL NOMINAL PVC AND 4-MIL NYLON INSULATION. TRIAD CONDUCTORS SHALL BE PIGMENTED BLACK, RED AND WHITE. JACKET SHALL BE FLAME-RETARDANT AND SUNLIGHT-AND OIL-RESISTANT PVC WITH 45-MIL NOMINAL THICKNESS. SHIELD SHALL BE 1.35-MIL ALUMINUM/MYLAR, OVERLAPPED TO PROVIDE 100 PERCENT COVERAGE.

GROUNDING

1. ALL METALLIC STRUCTURES AND EQUIPMENT SUCH AS STRUCTURAL STEEL, GENERATOR AND MOTOR FRAMES, ENCLOSURES, CABINETS FOR SWITCHGEAR AND OTHER ELECTRIC EQUIPMENT, METALLIC CONDUITS, CABLE TRAYS, STAIRS, FENCES AND HANDRAILS SHALL BE PERMANENTLY AND EFFECTIVELY GROUNDED. THE GROUND CONNECTION SHALL BE MADE TO THE PLANT GROUND GRID. REFER TO STANDARD DETAILS.
2. ALL GROUNDING CONDUCTORS SHALL BE BARE STRANDED SOFT DRAWN COPPER, CLASS B, UNLESS OTHERWISE NOTED.
3. THE GROUND CABLE SHALL BE INSTALLED, WHERE POSSIBLE, BENEATH SLABS, ATTACHED TO BUILDING STEEL OR RUN IN RACEWAYS AS SHOWN.
4. BURIED GROUND CABLES SHALL BE A MINIMUM OF 18" BELOW GRADE EXCEPT UNDER BUILDINGS WHERE THEY SHALL BE A MINIMUM OF 6" BELOW BOTTOM OF SLAB.
5. CONDUIT RUNS SHALL BE BONDED TOGETHER TO FORM A CONTINUOUS ELECTRICAL CONDUCTOR.
6. WHERE SEAL-TIGHT FLEXIBLE CONDUIT FOR MOTOR CONNECTION IS USED, PROVIDE GROUNDING JUMPER BETWEEN THE RIGID STEEL CONDUIT (MOTOR FEEDER) AND THE MOTOR BOX OR FRAME.
7. GENERATOR CASINGS, EXCITERS, SWITCHGEARS, MOTOR CONTROL CENTERS, LARGE METAL TANKS, TRANSFORMER CORES, AND MOTOR FRAMES LARGER THAN 150HP SHALL BE GROUNDED AT TWO POINTS.
8. THE FRAMES OF MOTORS SMALLER THAN 150HP SHALL BE GROUNDED DIRECTLY TO THE GROUND GRID OR TO THE STEEL COLUMN CONNECTED TO THE GROUND LOOP WITH COPPER WIRE OF SIZE AS REQUIRED BY THE LOS ANGELES CITY ELECTRICAL CODE.
9. ALL EQUIPMENT GROUND TERMINAL LUGS SHALL BE OF THE MECHANICAL TYPE.
10. BENDS IN GROUND CABLE SHALL BE GREATER THAN 12 TIMES THE CABLE OUTSIDE DIAMETER.
11. GROUNDING CONDUCTOR PIGTAIL AND INSERT LOCATIONS ARE APPROXIMATE ONLY. CONTRACTOR SHALL VERIFY IN THE FIELD AND LOCATE THEM CLOSE TO MOTOR, EQUIPMENT, GENERATOR, OR METAL STRUCTURE SERVED.
12. GROUNDING PIGTAIL SHALL BE THE SAME SIZE AS THE PHASE WIRE BUT NO LESS THAN NUMBER 8 AWG.
13. WHERE BARE GROUND CONDUCTORS ARE EXPOSED, CONTRACTOR SHALL PROVIDE PVC SCHEDULE 80 CONDUITS WITH ULTRA-VIOLET LIGHT PROTECTION.
14. ALL FLEXIBLE MOTOR CONDUITS SHALL HAVE OUTER GROUND CONDUCTOR.

EQUIPMENT AND DEVICES

1. ALL EQUIPMENT DIMENSIONS SHOWN ON PLANS AND ELEVATIONS ARE APPROXIMATE ONLY. THE CONTRACTOR SHALL USE THE SHOP DRAWINGS FOR PROPER FOUNDATION AND PAD LAYOUT, ETC. FOR FINAL INSTALLATION WITHOUT ANY ADDITIONAL COST TO THE CITY.
2. IT IS INCUMBENT UPON THE CONTRACTOR TO COORDINATE WITH HIS SUBCONTRACTORS TO MAKE SURE THAT EQUIPMENT SUPPLIERS PROVIDE ALL NECESSARY ELECTRICAL INFORMATION TO THE ELECTRICAL SUBCONTRACTOR FOR INCLUSION OF COSTS IN BID PACKAGE, ALL NECESSARY MATERIALS AND LABOR TO COMPLETE ELECTRICAL INSTALLATION SHALL BE PROVIDED WHETHER SHOWN OR NOT SHOWN ON THE DRAWINGS. ALL ELECTRICAL WORK SHALL BE IN ACCORDANCE WITH ALL CODES AND STANDARDS PER SPECIFICATION.
3. SWITCHGEARS, SWITCHBOARDS, MOTOR CONTROL CENTERS AND ALL FREE STANDING PANELS SHALL BE SET WITH LEVELING CHANNELS UNLESS OTHERWISE NOTED.
4. CONTRACTOR TO PROVIDE DESIGNS AND DETAILS FOR ALL MOUNTING AND ANCHORAGE OF EQUIPMENT IN ACCORDANCE WITH CHAPTER 23 OF THE LATEST EDITION OF THE UNIFORM BUILDING CODE AND LOS ANGELES BUILDING CODE.

MISCELLANEOUS

1. THE CONTRACTOR SHALL CONFIRM EXISTING CONDITIONS INCLUDING CONDUIT RUNS. ELECTRICAL DESIGN UPGRADE IS BASED ON CITY-PROVIDED, EXISTING "AS-BUILT" DRAWINGS WHICH MAY NOT BE ENTIRELY ACCURATE.
2. IN CASE OF INTERFERENCE BETWEEN ELECTRICAL EQUIPMENT AND OTHER EQUIPMENT THE CONTRACTOR SHALL NOTIFY THE ENGINEER IN WRITING AND THE ENGINEER SHALL REVIEW PROPOSED CHANGES BEFORE THEY ARE MADE.
3. ALL RECEPTACLES SHALL BE MOUNTED 18" ABOVE FLOOR SURFACE, UNLESS OTHERWISE NOTED ON THE DRAWINGS.
4. ALL RECEPTACLES IN OUTDOOR AND ANTICIPATED WET AREAS SHALL BE GROUND FAULT INTERRUPTER TYPE RECEPTACLES WITH WEATHER PROOF COVER PLATES.
5. SEE MECHANICAL DRAWINGS FOR INFORMATION ON EQUIPMENT TO BE WIRED.
6. PROVIDE MAINTENANCE HOLES OR PULL BOXES WHEREVER THEY ARE REQUIRED TO MAKE A WORKABLE INSTALLATION.
7. CIRCUITS OF DIFFERENT SERVICE VOLTAGE RANGES SHALL BE INSTALLED IN SEPARATE RACEWAYS, PULLBOXES AND JUNCTION BOXES. THE VOLTAGE AND SERVICE LEVELS ARE:
   1. 120V-480VOLT
   2. INSTRUMENTATION AND CONTROL LESS THAN 50VDC
      a) ANALOG
      b) SIGNAL
   3. TELEPHONE AND COMMUNICATIONS.
   4. FIBER OPTICS
8. RECEPTACLES, LIGHTING AND CONTROL CIRCUITS SHALL BE TYPE THHN/THWN SOLID WIRE.
9. ALL ELECTRICAL EQUIPMENT AND DEVICES SHALL BE UL APPROVED OR OTHER INDEPENDENT AGENCIES APPROVED BY THE CITY OF LOS ANGELES.
10. NO PIPING, DUCTS OR FOREIGN EQUIPMENT SHALL BE PERMITTED TO BE LOCATED WITHIN THE DEDICATED SPACE ABOVE THE ELECTRICAL EQUIPMENT.

MINIMUM SUBMITTAL REQUIREMENTS FOR SCHEMATIC DIAGRAMS:

1. ALL CONTROLS SHOWN DE-ENERGIZED.
2. CONTRACTOR SHALL INCORPORATE NECESSARY FUNCTIONS FOR PROPER OPERATIONS AND PROTECTION OF SYSTEMS.
3. SLAVE OR INTERPOSING RELAYS SHALL BE ADDED WHERE REQUIRED TO PROVIDE ALL NECESSARY CONTACTS REQUIRED FOR THE SCHEMATIC DIAGRAM SHOWN.
4. ALL DEVICES SHOWN ON MOTOR STARTER SCHEMATIC DIAGRAMS SHALL BE MOUNTED IN MOTOR STARTER CUBICLES, UNLESS OTHERWISE NOTED.

ELECTRICAL STUDIES

1. CONTRACTOR IS RESPONSIBLE FOR PREPARING A POWER SYSTEM ANALYSIS REPORT INCLUDING SHORT CIRCUIT CALCULATIONS, A HARMONIC ANALYSIS, A PROTECTIVE DEVICE COORDINATION STUDY AND AN ARC-FLASH STUDY. THE STUDY SHALL BEGIN WITH THE UTILITY COMPANY'S FEEDER PROTECTIVE DEVICE AND INCLUDE ALL OF THE ELECTRICAL DISTRIBUTION EQUIPMENT DOWN TO AND INCLUDING LOW VOLTAGE MOTOR CONTROL CENTERS, POWER DISTRIBUTION PANEL BOARDS AND LIGHTING PANELS AND TRANSFORMERS.
2. ALL INFORMATION REQUIRED TO PERFORM THE STUDY SHALL BE OBTAINED BY THE ENTITY PERFORMING THE STUDY. ALL COSTS FOR THIS WORK INCLUDING FIELD SETTINGS OF DEVICES, ADJUSTMENTS, AND MODIFICATIONS TO EQUIPMENT THAT ARE REQUIRED FOR CONFORMANCE WITH THE APPROVED STUDY SHALL BE INCLUDED IN THE CONTRACTOR BID PROPOSAL AND IS NOT REIMBURSABLE BY THE CITY.
3. PROVIDE AND INSTALL ARC-FLASH AWARENESS WARNING LABELS ON EACH ELECTRICAL EQUIPMENT PANEL AS REQUIRED BY NEC.

ELECTRIC MOTORS

1. UNLESS OTHERWISE SPECIFIED, ALL 3-PHASE MOTORS SHALL BE TEFC, SQUIRREL-CAGE INDUCTION, CONSTANT SPEED, HAVE ANTI-FRICTION BEARINGS AND CLASS F INSULATION, AND BE IN ACCORDANCE WITH ALL NEMA STANDARDS. MOTORS SHALL HAVE A MINIMUM SERVICE FACTOR OF 1.15 AT 40°C AMBIENT, AND STAINLESS STEEL AUTOMATIC BREATHER-DRAINS AT THE LOWEST POINT OF THE MOTOR ENCLOSURE.
2. ALL SINGLE-PHASE MOTORS, UNLESS OTHERWISE SPECIFIED, SHALL MEET ALL NEMA STANDARDS, BE TEFC, WITH ANTI-FRICTION BEARINGS, CLASS F INSULATION, AND HAVE A 1.15 SERVICE FACTOR AT 40°C AMBIENT.
3. ALL MOTORS LARGER THAN 3 HORSEPOWER SHALL BE PREMIUM EFFICIENCY, CAST IRON, CORROSIVE RESISTANT, HOSTILE ENVIRONMENT DESIGN, BALDOR "ECP", RELIANCE "XE", U. S. MOTORS "CORRO-DUTY", OR EQUAL. MOTORS LESS THAN 3 HORSEPOWER SHALL BE OF CAST IRON, STEEL OR ALUMINUM CONSTRUCTION, PREMIUM EFFICIENCY, AND CORROSIVE RESISTANT, HOSTILE ENVIRONMENT DESIGN.
4. MOTORS AND CONTROLS SHALL BE ADEQUATELY SIZED SO THE NAMEPLATE RATING WILL NOT BE EXCEEDED UNDER THE MAXIMUM DESIGN CAPACITY OF THE EQUIPMENT SUPPLIED.
5. ALL MOTOR NAMEPLATES SHALL BE STAINLESS STEEL, PERMANENTLY SECURED TO THE MOTOR, AND PROVIDE THE FOLLOWING INFORMATION: (1) NEMA DESIGN LETTER, (2) VOLTAGE, (3) PHASES, (4) FREQUENCY, (5) HORSEPOWER, (6) FULL LOAD CURRENT, (7) CLASS OF INSULATION, (8) FULL LOAD RPM, (9) AMBIENT TEMPERATURE/SERVICE FACTOR, (10) TIME RATING, (11) KVA CODE, (12) FRAME SIZE, (13) MFG. TYPE OR MODEL, (14) MFG. CATALOG NUMBER WITH DATE CODE, AND (15) SERIAL NUMBER.

VFDS

1. VFDS SHALL BE COMPLETE ALTERNATING CURRENT ELECTRIC DRIVE SYSTEMS INCLUDING HARDWARE AND SOFTWARE NECESSARY FOR VARIABLE SPEED OPERATION OF INDUCTION MOTOR AND LOAD COMBINATION.
2. VFD SUPPLIERS SHALL BE RESPONSIBLE FOR THE SUCCESSFUL APPLICATION AND OPERATION OF THE DRIVE COMBINED WITH THE MOTOR AND DRIVEN EQUIPMENT. THIS INCLUDES THE RESPONSIBILITY FOR DETERMINING DRIVEN EQUIPMENT LOAD, TORQUE, SPEED, AND PERFORMANCE REQUIREMENTS.
3. VFD SYSTEMS SHALL BE SUITABLE FOR OPERATION AS PART OF A 480 VOLT ALTERNATING CURRENT, 3 PHASE, 60 HERTZ POWER DISTRIBUTION SYSTEM. VFD SYSTEMS SHALL BE DESIGNED TO WITHSTAND MECHANICAL FORCES EXERTED DURING SHORT CIRCUIT CONDITIONS. IN THE EVENT THAT THE RESULTS OF THE SHORT CIRCUIT FAULT ANALYSIS SUBMITTED DURING THE SHOP DRAWINGS PERIOD, AS ACCEPTED BY THE ENGINEER, INDICATE THAT A HIGHER SHORT CIRCUIT DUTY RATING OF THE VFD SYSTEM IS REQUIRED, THE CONTRACTOR SHALL FURNISH THE VFD SYSTEM WITH THAT HIGHER RATING.
4. ALL NECESSARY MOTOR AND DRIVE PARAMETERS TOGETHER WITH SPECIFIC CONTROL AND PROTECTION FUNCTIONS SHALL BE PROGRAMMABLE VIA A KEYPAD. CONTROL AND SEQUENCE LOGIC SHALL BE DESIGNED SUCH THAT THE MOTOR-LOAD COMBINATION CAN BE OPERATED IN THE MANUAL MODE UPON CONTROL AND SEQUENCE LOGIC FAILURE, AND THAT ALL NECESSARY PERSONNEL AND EQUIPMENT SAFETY INTERLOCKS WILL REMAIN EFFECTIVE.
5. VFDS SHALL NOT RESULT IN HARMONIC TRANSIENTS THAT EXCEED IEEE STANDARDS, AS DETERMINED BY CONTRACTOR'S HARMONIC ANALYSIS. CONTRACTOR SHALL PROVIDE HARMONIC FILTERS AS REQUIRED TO LIMIT HARMONIC DISTORTION WITHIN IEEE STANDARDS. PROVIDE MINIMUM 18 PULSE VFDS.

ProjectLine
Technical Services, Inc

carollo

ENGINEERING
CITY OF LOS ANGELES
Environmental Engineering Division

THIS PLAN WAS ELECTRONICALLY SIGNED AND STAMPED

ROBERT D. GETTER
No. E 19384
Exp. 06-30-27
REGISTERED PROFESSIONAL ENGINEER
ELECTRICAL
CALIFORNIA

BUREAU OF ENGINEERING
VERTICAL CONTROL:
HORIZONTAL CONTROL:
SHEET TITLE: ELECTRICAL GENERAL NOTES
PROJECT: MACARTHUR LAKE STORMWATER CAPTURE PROJECT
ADDRESS: MACARTHUR PARK 2230 6TH ST LOS ANGELES CA 90057

DEPARTMENT OF PUBLIC WORKS
CITY OF LOS ANGELES

NO.	REVISIONS	DATE	BY

CIP NO. 1920R004
INDEX NO. D-XXXXX

	DESIGN GROUP	DATE
ENGINEER:	ROBERT GETTER	01/22/2026
ARCHITECT:		
DESIGNED BY:	HENRY LUONG	01/22/2026
DRAWN BY:	CHARLEY KHUU / PAVEL PETIN	01/22/2026
CHECKED BY:	ROBERT GETTER ROBERT MORRONI	01/22/2026
APPROVED BY:	ROBERT GETTER	01/22/2026

WORK ORDER
S33WMLRP, S043MSWC, S343MSWC

SHEET NAME
EG001
SHEET 66 OF 108 SHEETS

REVISION DATES (DESIGN STAGE ONLY)

THE CITY OF LOS ANGELES OR ITS OFFICERS OR AGENTS SHALL NOT BE RESPONSIBLE FOR THE ACCURACY OR COMPLETENESS OF ELECTRONIC COPIES OF THIS PLAN SHEET.

SHEET VERSION 4.0.1 FILE PATH: C:\PW_WORKING\CAROLLO_200000\D0225944\I203818EG001.DWG PLOT DATE: 1/15/2026 3:57 PM SAVED: 1/15/2026 3:48 PM SAVED BY:CHARLEY

FINAL DESIGN SUBMITTAL

E L E C T R I C A L S Y M B O L S

P L A N

- BURIED CONDUIT
- CONCRETE ENCASED DUCTBANK
- CONDUIT RUN EXPOSED
- CONDUIT RUN, UNDERGROUND
- CONDUIT RUN, CONCEALED IN CEILING OR WALL.
- CONDUIT RUN, CHANGE IN ELEVATION
- CONDUIT BENDS UP OR TOWARD OBSERVER
- CONDUIT BENDS DOWN OR AWAY FROM OBSERVER
- T — CONDUIT CONTAINING: T=TELEPHONE, FA=FIRE ALARM, S=SIGNAL, ET=EMERGENCY TELEPHONE, PA=PUBLIC ADDRESS
- FLEXIBLE CONDUIT
- CONDUIT FITTING
- CONDUIT CAPPED
- CONDUIT SEAL
- 4"C WITH 8 NO.12 WIRES MAX, AS SHOWN, NO CIRCUIT # NOTED. CONDUIT RUNS NOT MARKED ARE 4"C WITH 2#12 WIRES ONLY. WIRE SIZES OTHER THAN #12 ARE MARKED. PROVIDE 1#12 WIRE FOR GROUNDING
- LPA-1/3/5, 2/4,7 — CROSS MARKS ON CONDUIT WITH CKT # NOTED INDICATE NUMBER OF NO. 12 WIRES IN 4"C HOMERUN ONLY.3/4" CONDUIT WITH 9 NO.12 WIRES SHOWN, CIRCUITS 1,3 & 5 WITH COMMON NEUTRAL CIRCUITS 2 & 4 WITH COMMON NEUTRAL & CIRCUIT 7 WITH SEPARATE NEUTRAL HOMERUN TO PANEL `LPA'.
- P15 — CONDUIT NUMBER, SEE CONDUIT SCHEDULE P = POWER, C = CONTROL, S = SIGNAL; 15 =ARBITRARY SEQUENTIAL NUMBER
- 3/4"C- 2#10 — CONDUIT RUNS NOT LISTED IN CONDUIT SCHEDULE ARE NOTED AS SHOWN.
- J — JUNCTION BOX
- GROUND INSERT
- GROUND WIRE, MAIN LOOP (UNDERGROUND)
- GROUND WIRE, TAP EXPOSED
- UNDERGROUND TAP
- GROUND ROD
- GROUND WELL AND ROD FOR PAVED AREAS
- GROUND WELL AND ROD FOR UNPAVED AREAS
- GROUNDING CONDUCTOR PIGTAILED ABOVE FINISHED FLOOR
- LIGHTNING PROTECTION SYS., AIR TERMINAL
- 2A — CEILING OR PENDANT MTD. LTG. FIXTURE "2" INDICATES CIRCUIT NUMBER. "a" INDICATES FIXTURE CONTROLLED BY SW "a".
- 2 — CEILING OR PENDANT MTD. LED LTG. FIXTURE "2" INDICATES CIRCUIT NO.
- WALL MOUNTED LED LTG. FIXTURE
- EMERGENCY LED LIGHTING FIXTURE
- 1 — LIGHTING FIXTURE CONNECTED TO EMERGENCY CIRCUIT "1" INDICATES CIRCUIT NO.
- LED STRIP LIGHTING FIXTURE
- LED STRIP EMERGENCY LIGHTING FIXTURE
- LED STRIP LIGHTING FIXTURE TANDEM WIRED
- WALL MOUNTED LIGHTING FIXTURE
- FLOODLIGHT
- STREETLIGHT
- EMERGENCY LIGHTING WITH EXIT COMBO UNIT, SELF CHARGING BATTERY TYPE WITH LOW VOLTAGE SEALED LAMPS
- RE — RECESSED EXIT LIGHT
- A, 2/40, ±8'-6", 3 — LTG. FIXTURE TYPE `A', 2-40 WATT LAMPS, 3=NUMBER OF FIXTURES; 8'-6"=ACTUAL MOUNTING HEIGHT
- 3/4"C-(2)TSP#16, 3/4"C-2#12 + 1#12 GND; 3/4"C-(2)TSP#16, 3/4"C-2#12 + 1#12 GND — (2)JUNCTION BOXES AND CORRESPONDING CONDUITS AS SHOWN

- T — THERMOSTAT
- C — CLOCK HANGER, RECEPTACLE
- 120V, 1Ø ELECTRIC MOTOR
- HORIZONTAL MOTOR
- VERTICAL MOTOR
- H — HEATER
- SS — PUSHBUTTON STATION; "SS"=START-STOP, LOS=LOCK-OUT-STOP, "SLOS"=START-LOCK-OUT-STOP
- H-O-A — SELECTOR SWITCH H-O-A=HAND, OFF, AUTOMATIC, L-O-R=LOCAL OFF REMOTE
- TELEPHONE OUTLET, PUBLIC
- TELEPHONE OUTLET, PRIVATE
- BELL
- BUZZER
- P — H=HORN, S=SPEAKER, SN=SIREN, P=PUBLIC ADDRESS
- S — SPEAKER, CEILING MOUNTED - SURFACE MOUNTED
- LIGHTING PANEL/POWER PANEL
- CONTROL PANEL
- MOTOR CONTROL CENTER
- TC — TERMINAL CABINET
- MH — MAINTENANCE HOLE
- HH — HANDHOLE
- PB — PULLBOX
- FA — FIRE ALARM MANUAL STATION
- T — TRANSFORMER
- MAGNETIC MOTOR STARTER
- MAGNETIC CONTACTOR
- F — DISCONNECT SWITCH, N=NON FUSIBLE, F=FUSIBLE
- EMERGENCY TELEPHONE STATION
- TC — TELEPHONE TERMINAL CABINET
- $_a — SINGLE POLE SWITCH. "a" INDICATES CIRCUIT CONTROLLED
- $_3 — THREE-WAY SWITCH
- $_P — SWITCH AND PILOT LIGHT
- $_MC — MANUAL MOTOR STARTER
- $_WP — WEATHERPROOF SWITCH

WALL FLOOR

- 120V SINGLE RECEPTACLE, NEMA CONFIGURATION 5-20.
- 120V DUPLEX RECEPTACLE, NEMA CONFIGURATION 5-20
- SPECIAL PURPOSE RECEPTACLE (INDICATE RATING)
- WP, VP — POWER RECEPTACLE, XP=EXPLOSION PROOF, WP=WEATHERPROOF, VP=VAPORTIGHT
- LS(T) — DEVICE AS IDENTIFIED ON P&ID:
  LS (T) = LEVEL SWITCH (TRANSMITTER)
  TS (T) = TEMPERATURE SWITCH (TRANSMITTER)
  FS (T) = FLOW SWITCH (TRANSMITTER)
  PS (T) = PRESSURE SWITCH (TRANSMITTER)
  TE = THERMAL ELEMENT (THERMOCOUPLE)
  LMS = LIMIT SWITCH
  SV = SOLENOID VALVE
  TI = TEMPERATURE INDICATOR
  LX = TRANSDUCER
  :OR REFER TO THE I&C LEGEND AND SYMBOLS.
- 1 / 0-E-3 — DETAIL #1, ON DWG. 0-E-3
- DELTA-WYE CONNECTION
- ZIG-ZAG CONNECTION FOR GRD. XFMR
- B — "B" DENOTES SECTION LETTER 0-E-3 DENOTES REFERENCE TO DRAWING ON WHICH DETAIL IS SHOWN.

O N E L I N E D I A G R A M

- N — NETWORK
- BUS
- POWER CONDUCTOR
- CONTROL METERING, SIGNAL OR INDICATING LIGHT CONDUCTOR
- ELECTRIC INPUT (OR FUTURE)
- K — INTERLOCK (K=MECHANICAL KEY)
- E — ELECTRIC INTERLOCK
- BUS-DUCT, AMPERE RATING & NO. OF CONDUCTOR SHOWN
- CROSSING OF CONDUCTOR NOT CONNECTED
- CONNECTION OF CONDUCTORS
- CABLE TERMINATION
- SEPARABLE CONNECTOR (DRAW-OUT TYPE)
- THERMAL OVERLOAD
- GROUND CONNECTION
- LIGHTNING ARRESTOR
- SURGE CAPACITOR
- M — HIGH OR LOW VOLTAGE DISCONNECT SWITCH, AIR BREAK M=MOTOR OPERATED
- FUSE
- FUSED DISCONNECT SWITCH
- RECTIFIER
- RES — RESISTOR
- SPACE HEATER
- RHEOSTAT, ADJUSTABLE RESISTOR
- BATTERY (MULTICELL)
- CONTACT, NORMALLY OPEN
- CONTACT, NORMALLY CLOSED
- POWER RECEPTACLE
- 400AF / 600AT, E — AIR CIRCUIT BREAKER AF=AMPERE FRAME RATING, AT=AMPERE TRIP RATING E=ELECTRIC OPERATED, ST=SHUNT TRIP, NO=NORMALLY OPEN, NC=NORMALLY CLOSED WITHOUT CIRCLE = MANUALLY OPERATED.
- 1200A, 52, NA — AIR OR VACUUM CIRCUIT BREAKER (GENERAL) HIGH OR MEDIUM VOLTAGE 34.5KV, 13.8KV OR 4.8KV (DEVICE NO. 52) NA=NON AUTOMATIC AC=AMPERE CAPACITY, IC=INTERRUPTING CAPACITY.
- STC, 3 — 3=QUANTITY REQUIRED (INDICATE CURRENT RATIO), STC=SATURATED CURRENT XFMR.
- 3 — POTENTIAL TRANSFORMER 3=QUANTITY REQ'D. CPT=CONTROL POWER TRANSFORMER, PPT=POTENTIAL POWER TRANSFORMER, PST=PHASE SHIFT TRANSFORMER
- ZERO SEQUENCE CURRENT TRANSFORMER
- 1200 / 5 / MR, 3 — BUSHING TYPE CURRENT TRANSFORMER 3=QUANTITY REQUIRED. 1200/5 SIGNIFIES CT RATIO MR SIGNIFIES MULTIPLE RATIOS OF CT
- POWER TRANSFORMER TWO WINDINGS.
- WINDING , GENERAL SYMBOL OR REACTOR
- WYE CONNECTION SYMBOL WITH SOLID GROUNDING NEUTRAL.
- WYE CONNECTION SYMBOL WITH NEUTRAL GROUNDING RESISTOR
- WYE CONNECTION SYMBOL WITH NEUTRAL GROUNDING TRANSFORMER AND SEC. SHUNT RESISTOR.
- ▲ — WIRED EQUIPMENT OR DEVICE

- GENERATOR, WITH SEPARATE EXCITER
- 10 / 2S — 3Ø INDUCTION MOTOR, 10 HORSEPOWER, 2S=2 SPEED WINDING, 2S2W=2 SPEED 2 WINDINGS
- 30 — 3Ø WOUND ROTOR INDUCTION MOTOR 10 HORSEPOWER.
- 51 — PROTECTIVE RELAY FUNCTION NUMBERS PER ANSI STANDARD C37.2 51 = AC TIME OVERCURRENT RELAY.
- 50 / 51 — MULTI-FUNCTION PROTECTIVE RELAY 50 = INSTANTANEOUS OVERCURRENT RELAY 51 = TIME OVERCURRENT RELAY.
- A — INSTRUMENT A=AMMETER, V=VOLTMETER, W=WATTMETER, KWH=KILOWATT HOUR METER, PF=POWER FACTOR METER, VAR=VARMETER, mA= MILLIAMPERE, AH=AMPERE-HOUR, uA=MICROAMMETER, FM=FREQUENCY METER SI=SPEED INDICATOR ETM=ELAPSED TIME METER AR=RECORDER, AMPS VR=RECORDER, VOLTS WR=RECORDER, WATTS WHD=WATT-HOUR DEMAND METER
- A / VAR — TRANSDUCER, A=CURRENT, W=WATT F=FREQUENCY, V=VOLTAGE, VAR=VAR
- SELECTOR SWITCH, HOA=HAND-OFF-AUTOMATIC, LOR=LOCAL-OFF-REMOTE SPSEL=HIGH-OFF-LOW
- ST,SP,J — PUSHBUTTON STATION, 3=NUMBER OF STATIONS, RES=RESET, OP=OPEN, CL=CLOSE EX=EXTEND, RT=RETRACT, ST=START SP=STOP, F=FORWARD, R=REVERSE, L=LEFT, R=RIGHT, J=JOG, U=UP, D=DOWN, FA=FAST, SL=SLOW, H=HAND O=OFF, A=AUTO.
- E — AUTOMATIC TRANSFER SWITCH
- THMS — EQUIPMENT AUXILIARIES: RTD= RESISTANCE TEMPERATURE DETECTOR THMS = THERMISTOR VIB = VIBRATION SWITCH TC = THERMOCOUPLE
- A — INDICATING LIGHT A=AMBER, B=BLUE C=CLEAR, G=GREEN, NE=NEON, O=ORANGE, OP=OPALESCENT, P=PURPLE, R=RED, W=WHITE, Y=YELLOW.
- VR — VOLTAGE REGULATOR
- A — INTERLOCK K=KEY, R=RELAY, ARROW TERMINATES AT DEVICE
- AS — INSTRUMENT & CONTROL SWITCHES AS=AMMETER SWITCH VS=VOLTMETER SWITCH TS=TEST SWITCH SS=SYNCHRONIZING SWITCH SEL=SELECTOR SWITCH CS=CONTROL SWITCH
- VFD — VARIABLE FREQUENCY DRIVE EQUIPMENT
- P — PULSER
- TD — TIME DELAY RELAY
- 1 / R — MAGNETIC STARTER FULL VOLTAGE. R=REVERSING, RV=REDUCED VOLTAGE. 2S=TWO SPEED, 2SR= TWO SPEED REVERSING 2=NEMA SIZE OF CONTACTOR
- 3A MCP / 1 / R — COMBINATION MAGNETIC STARTER AND CIRCUIT BREAKER 3A=CONTINUOUS RATING IN AMPERES 1=DENOTES STARTER SIZE MCP=DENOTES MOTOR CIRCUIT PROTECTOR R=REVERSING
- COMBINATION MAGNETIC STARTER AND FUSED DISCONNECT SWITCH-LOW VOLTAGE.

- MAGNETIC STARTER, MEDIUM VOLTAGE
- 3 — POTENTIAL TRANSFORMER AND DRAWOUT FUSE. 3=QUANTITY REQUIRED.
- DISCONNECT SWITCH AND FUSE
- ADJUSTABLE OR VARIABLE FUNCTION
- △ — 3-PHASE, DELTA CONNECTION
- 3-PHASE, 3-WIRE, GROUNDED CORNER DELTA
- 3-PHASE, OPEN DELTA
- 3-PHASE, OPEN DELTA, GROUNDED AT COMMON POINT.
- EQUIPMENT OR DEVICE LOCATED IN CENTRAL CONTROL ROOM.
- ▽ — EQUIPMENT OR DEVICE LOCATED IN SWITCHGEAR OR MOTOR CONTROLLER
- ■ — EQUIPMENT OR DEVICE LOCATED IN LOCAL CABINET
- DA / 123A — DIGITAL ALARM INPUT (HARD-WIRED) TO ANNUNCIATOR PANEL.
- 4753 / UA / 123A — DIGITAL ALARM INPUT TO SCADA SYSTEM 4753 INDICATES LOOP NUMBER
- 4753 / UI / 123A — IMPULSE OR ANALOG INPUT TO SCADA SYSTEM 4753 – INDICATES LOOP NUMBER
- ∅ — EQUIPMENT OR DEVICE LOCATED IN CSI
- 2 — SPECIAL NOTE DESIGNATION
- KWH — UTILITY COMPANY ELECTRICAL METER
- PM — ELECTRONIC POWER METER DIGITAL OR SMART METER

WIRING DESCRIPTIONS

1/C	SINGLE CONDUCTOR
2/C	TWO CONDUCTOR
3P	THREE-POLE
3PH	THREE PHASE
3W	THREE WIRE
4/C	FOUR CONDUCTOR
4P	FOUR-POLE
% IMP	PERCENT IMPEDANCE

ProjectLine
Technical Services, Inc

carollo

ENGINEERING
CITY OF LOS ANGELES
Environmental Engineering Division

THIS PLAN WAS ELECTRONICALLY SIGNED AND STAMPED
REGISTERED PROFESSIONAL ENGINEER ROBERT D. GETTER No. E 21884 Exp. 06-30-27 ELECTRICAL

BUREAU OF ENGINEERING
VERTICAL CONTROL:
HORIZONTAL CONTROL:
SHEET TITLE: ELECTRICAL SYMBOLS
PROJECT: MACARTHUR LAKE STORMWATER CAPTURE PROJECT
ADDRESS: MACARTHUR PARK 2230 6TH ST LOS ANGELES CA 90057

DEPARTMENT OF PUBLIC WORKS
CITY OF LOS ANGELES

NO.	REVISIONS	DATE	BY

CIP NO. 1920R004
INDEX NO. D-XXXXX

	DESIGN GROUP	DATE
ENGINEER:	ROBERT GETTER	01/22/2026
ARCHITECT:		01/22/2026
DESIGNED BY:	HENRY LUONG	01/22/2026
DRAWN BY:	CHARLEY KHUU / PAVEL PETIN	01/22/2026
CHECKED BY:	ROBERT GETTER ROBERT MORRONI	01/22/2026
APPROVED BY:	ROBERT GETTER	01/22/2026

WORK ORDER S33WMLRP, S043MSWC, S343MSWC

SHEET NAME
EG002
SHEET 67 OF 108 SHEETS

REVISION DATES (DESIGN STAGE ONLY)

THE CITY OF LOS ANGELES OR ITS OFFICERS OR AGENTS SHALL NOT BE RESPONSIBLE FOR THE ACCURACY OR COMPLETENESS OF ELECTRONIC COPIES OF THIS PLAN SHEET.

FINAL DESIGN SUBMITTAL

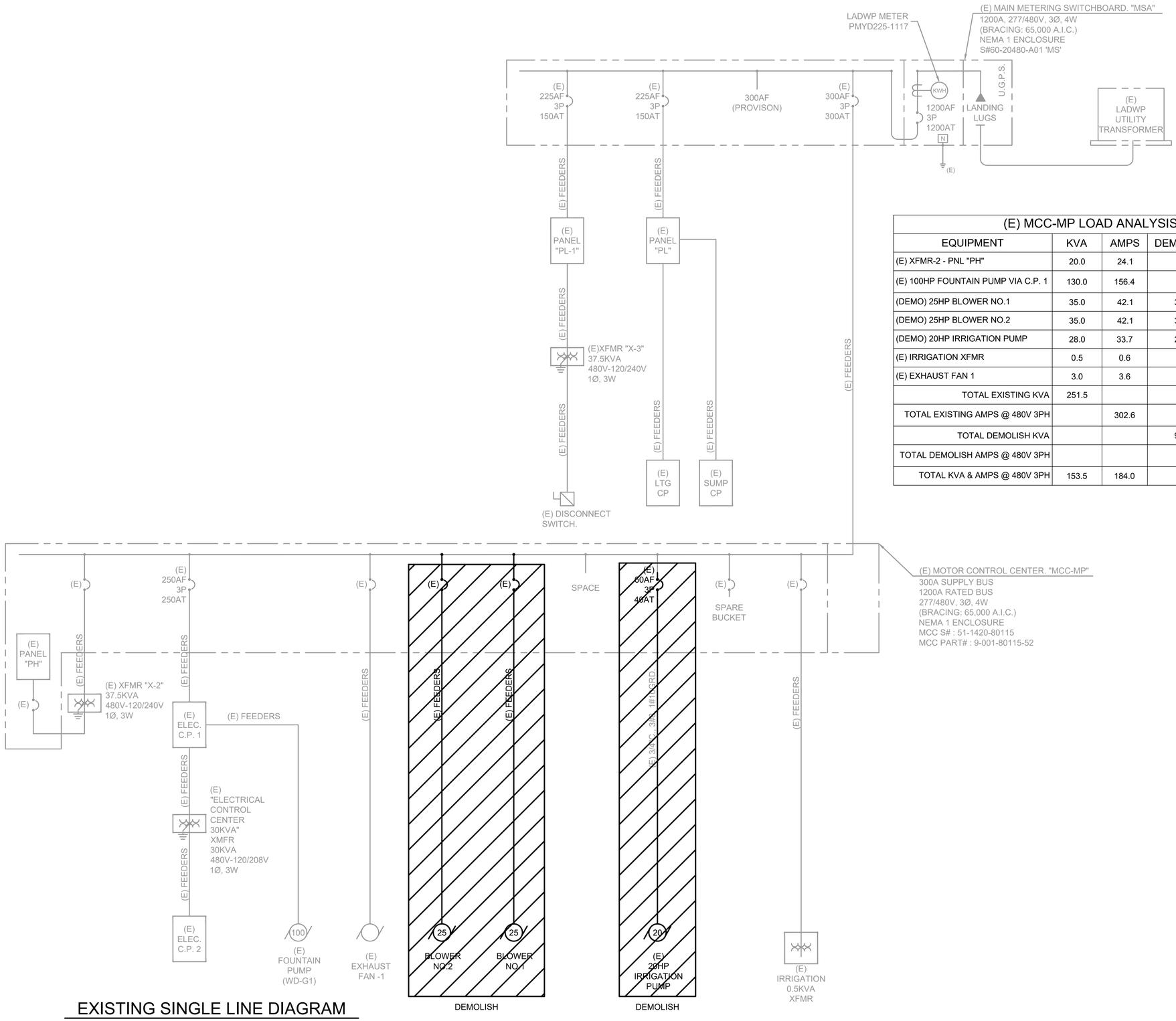

EXISTING SINGLE LINE DIAGRAM

(E) MCC-MP LOAD ANALYSIS				
EQUIPMENT	KVA	AMPS	DEMO KVA	DEMO AMPS
(E) XFMR-2 - PNL "PH"	20.0	24.1		
(E) 100HP FOUNTAIN PUMP VIA C.P. 1	130.0	156.4		
(DEMO) 25HP BLOWER NO.1	35.0	42.1	35.0	42.1
(DEMO) 25HP BLOWER NO.2	35.0	42.1	35.0	42.1
(DEMO) 20HP IRRIGATION PUMP	28.0	33.7	28.0	33.7
(E) IRRIGATION XFMR	0.5	0.6		
(E) EXHAUST FAN 1	3.0	3.6		
TOTAL EXISTING KVA	251.5			
TOTAL EXISTING AMPS @ 480V 3PH		302.6		
TOTAL DEMOLISH KVA			98.0	
TOTAL DEMOLISH AMPS @ 480V 3PH				117.0
TOTAL KVA & AMPS @ 480V 3PH	153.5	184.0		

ENGINEERING
CITY OF LOS ANGELES
Environmental Engineering Division

REGISTERED PROFESSIONAL ENGINEER ROBERT D. GETTER No. E 21884 Exp. 06-30-27 ELECTRICAL

THIS PLAN WAS ELECTRONICALLY SIGNED AND STAMPED

BUREAU OF ENGINEERING

VERTICAL CONTROL:
HORIZONTAL CONTROL:

SHEET TITLE: DEMOLITION SINGLE LINE DIAGRAM AND SWBD & MCC ELEVATION
PROJECT: MACARTHUR LAKE STORMWATER CAPTURE PROJECT
ADDRESS: MACARTHUR PARK 2230 6TH ST LOS ANGELES CA 90057

DEPARTMENT OF PUBLIC WORKS

NO.	REVISIONS	DATE	BY

CIP NO. 1920R004

INDEX NO. D-XXXXX

ProjectLine Technical Services, Inc

carollo

CITY OF LOS ANGELES

	DESIGN GROUP	DATE
ENGINEER:	ROBERT GETTER	01/22/2026
ARCHITECT:		
DESIGNED BY:	HENRY LUONG	01/22/2026
DRAWN BY:	CHARLEY KHUU / PAVEL PETIN	01/22/2026
CHECKED BY:	ROBERT GETTER ROBERT MORRONI	01/22/2026
APPROVED BY:	ROBERT GETTER	01/22/2026

WORK ORDER S33WMLRP, S043MSWC, S343MSWC

SHEET NAME
ED001
SHEET 68 OF 108 SHEETS

THE CITY OF LOS ANGELES OR ITS OFFICERS OR AGENTS SHALL NOT BE RESPONSIBLE FOR THE ACCURACY OR COMPLETENESS OF ELECTRONIC COPIES OF THIS PLAN SHEET.

REVISION DATES (DESIGN STAGE ONLY)

SHEET VERSION 4.0.1 FILE PATH: C:\PW_WORKING\CAROLLO_200000\D0225944\203818ED001.DWG PLOT DATE: 1/15/2026 3:57 PM SAVED: 1/15/2026 3:48 PM SAVED BY:CHARLEY

FINAL DESIGN SUBMITTAL

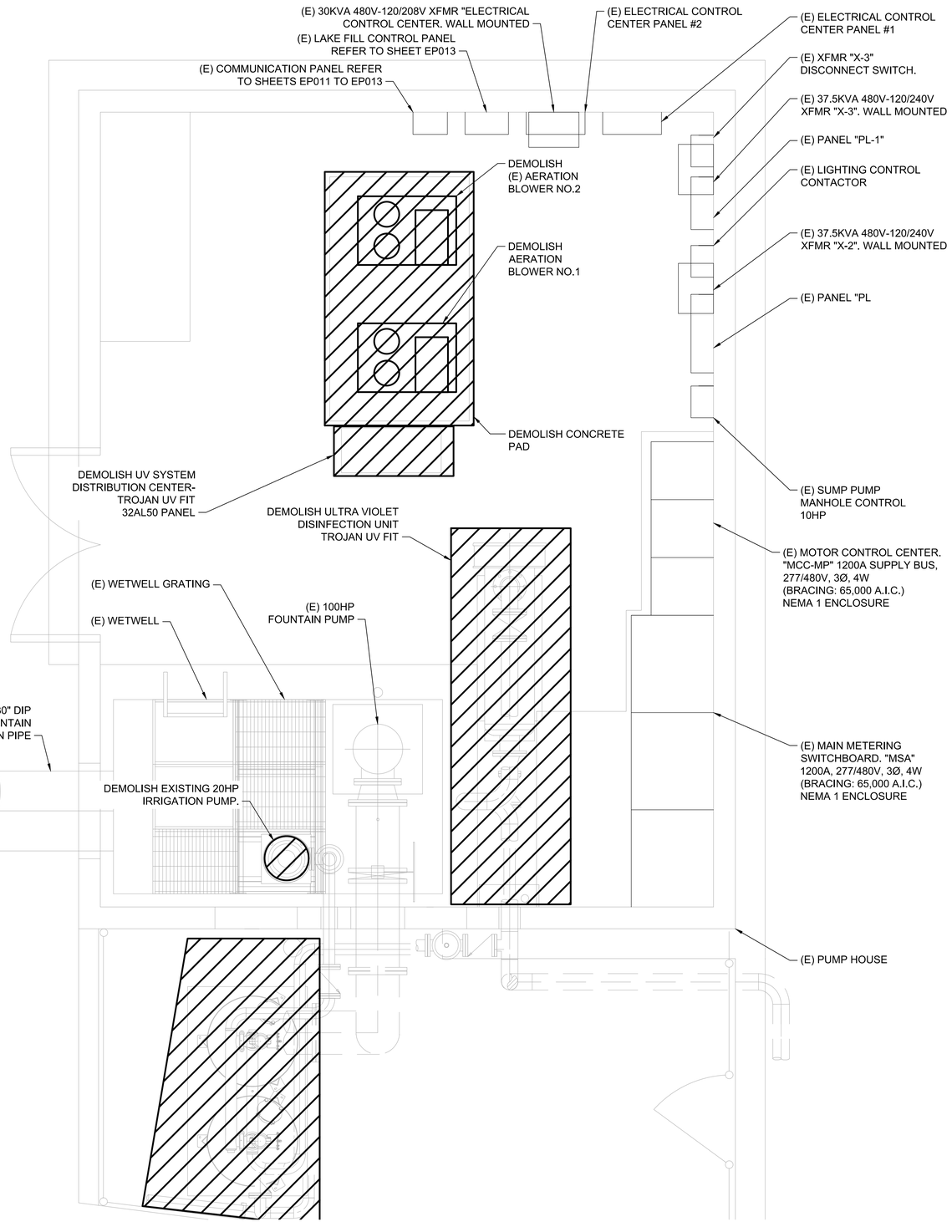

PUMP HOUSE DEMOLITION PLAN

THE CITY OF LOS ANGELES OR ITS OFFICERS OR AGENTS SHALL NOT BE RESPONSIBLE FOR THE ACCURACY OR COMPLETENESS OF ELECTRONIC COPIES OF THIS PLAN SHEET.

REVISION DATES (DESIGN STAGE ONLY)

ProjectLine
Technical Services, Inc

carollo

ENGINEERING
CITY OF LOS ANGELES
Environmental Engineering Division

• THIS PLAN WAS ELECTRONICALLY SIGNED AND STAMPED •

REGISTERED PROFESSIONAL ENGINEER ROBERT D. GETTER No. E 21884 Exp. 06-30-27 CIVIL STATE OF CALIFORNIA

BUREAU OF ENGINEERING

VERTICAL CONTROL:
HORIZONTAL CONTROL:

SHEET TITLE: DEMOLITION PUMP HOUSE ELECTRICAL PLAN
PROJECT: MACARTHUR LAKE STORMWATER CAPTURE PROJECT
ADDRESS: MACARTHUR PARK 2230 6TH ST LOS ANGELES CA 90057

DEPARTMENT OF PUBLIC WORKS

NO.	REVISIONS	DATE	BY

CIP NO. 1920R004

INDEX NO. D-XXXXX

CITY OF LOS ANGELES

	DESIGN GROUP	DATE
ENGINEER:	ROBERT GETTER	01/22/2026
ARCHITECT:		
DESIGNED BY:	HENRY LUONG	01/22/2026
DRAWN BY:	CHARLEY KHUU / PAVEL PETIN	01/22/2026
CHECKED BY:	ROBERT GETTER	01/22/2026
APPROVED BY:	ROBERT GETTER	01/22/2026

WORK ORDER S33WMLRP, S043MSWC, S343MSWC

SHEET NAME
ED002
SHEET 69 OF 108 SHEETS

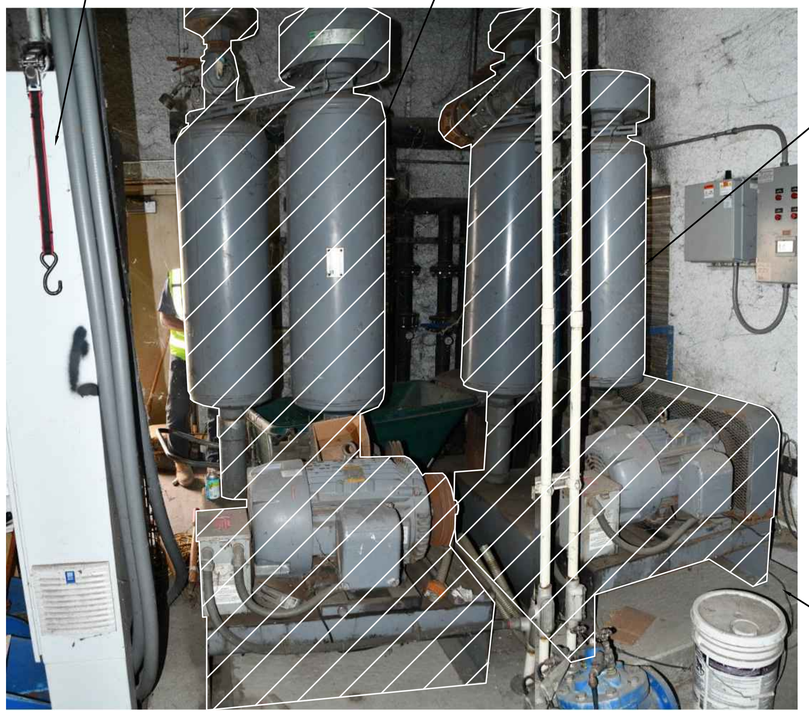

1 AERATION BLOWER DEMOLITION
SCALE: NTS



2 AERATION BLOWER DEMOLITION
SCALE: NTS

PRINT IN COLOR

ProjectLine
Technical Services, Inc

carollo

ENGINEERING
CITY OF LOS ANGELES
Environmental Engineering Division

THIS PLAN WAS ELECTRONICALLY SIGNED AND STAMPED

REGISTERED PROFESSIONAL ENGINEER ROBERT D. GETTER No. E 21586 Exp. 06-30-27 CIVIL STATE OF CALIFORNIA

BUREAU OF ENGINEERING

VERTICAL CONTROL:
HORIZONTAL CONTROL:

SHEET TITLE: DEMOLITION ELECTRICAL DETAILS

PROJECT: MACARTHUR LAKE STORMWATER CAPTURE PROJECT

ADDRESS: MACARTHUR PARK
2230 6TH ST LOS ANGELES CA 90057

DEPARTMENT OF PUBLIC WORKS

NO.	REVISIONS	DATE	BY

CIP NO. 1920R004

INDEX NO. D-XXXXX

CITY OF LOS ANGELES

	DESIGN GROUP	DATE
ENGINEER:	ROBERT GETTER	01/22/2026
ARCHITECT:		01/22/2026
DESIGNED BY:	HENRY LUONG	01/22/2026
DRAWN BY:	CHARLEY KHUU / PAVEL PETIN	01/22/2026
CHECKED BY:	ROBERT GETTER ROBERT MORRONI	01/22/2026
APPROVED BY:	ROBERT GETTER	01/22/2026

WORK ORDER
S33WMLRP, S043MSWC, S343MSWC

SHEET NAME
ED003

SHEET 70 OF 108 SHEETS

THE CITY OF LOS ANGELES OR ITS OFFICERS OR AGENTS SHALL NOT BE RESPONSIBLE FOR THE ACCURACY OR COMPLETENESS OF ELECTRONIC COPIES OF THIS PLAN SHEET.

REVISION DATES (DESIGN STAGE ONLY)

LA DWP Los Angeles Department of Water & Power

CUSTOMERS FIRST

Eric Garcetti, Mayor

Board of Commissioners
Mel Levine, President
Cynthia McClain-Hill, Vice President
Jill Banks Barad
Nicole Neeman Brady
Susana Reyes
Susan A. Rodriguez, Secretary

Martin L. Adams, General Manager and Chief Engineer

12 Month Peak Demand Report

March 15, 2022

Aditya Mehta
456 E. Orange Grove Blvd.
Suite 301
Pasadena, CA 91104.

2301 w 7th St.
Commercial Business

Thank you for your request for the 12 Month Peak Demand Report at the address listed above.

The Department of Water & Power is providing this 12 month historical peak demand report for informational purposes only.

CAUTION!

The Department of Water & Power does not guarantee or represent that this information can be used to determine whether any increase in connected loads can be supported by the existing utility serving facilities for this address.

Adequate utility service supply can only be determined by submitting complete electrical plans to the appropriate Department of Water & Power engineering office for review of the existing serving facilities and utility infrastructure at the address(s) listed.

The Peak Demand for the requested meter(s) in the past 12 months is estimated to be:

Address	Unit	Voltage	Ø-Wire	Peak Demand
2301 w 7th St.	PMYD225-1117	277/480	3Ø-4Wire	85 kW

For questions about the information, please contact our Connection Center Representative, Mr. Jeff Firestone at (213) 367-6937.

Sincerely,

Jeff Firestone
Assist. Chief Electrical Service Representative
LADWP Connection Center

111 North Hope Street, Customer Care Center, Room 105, Mailing Address: PO Box 51111, Los Angeles, CA 90051-5700
Telephone: (213) 367-4211 ladwp.com

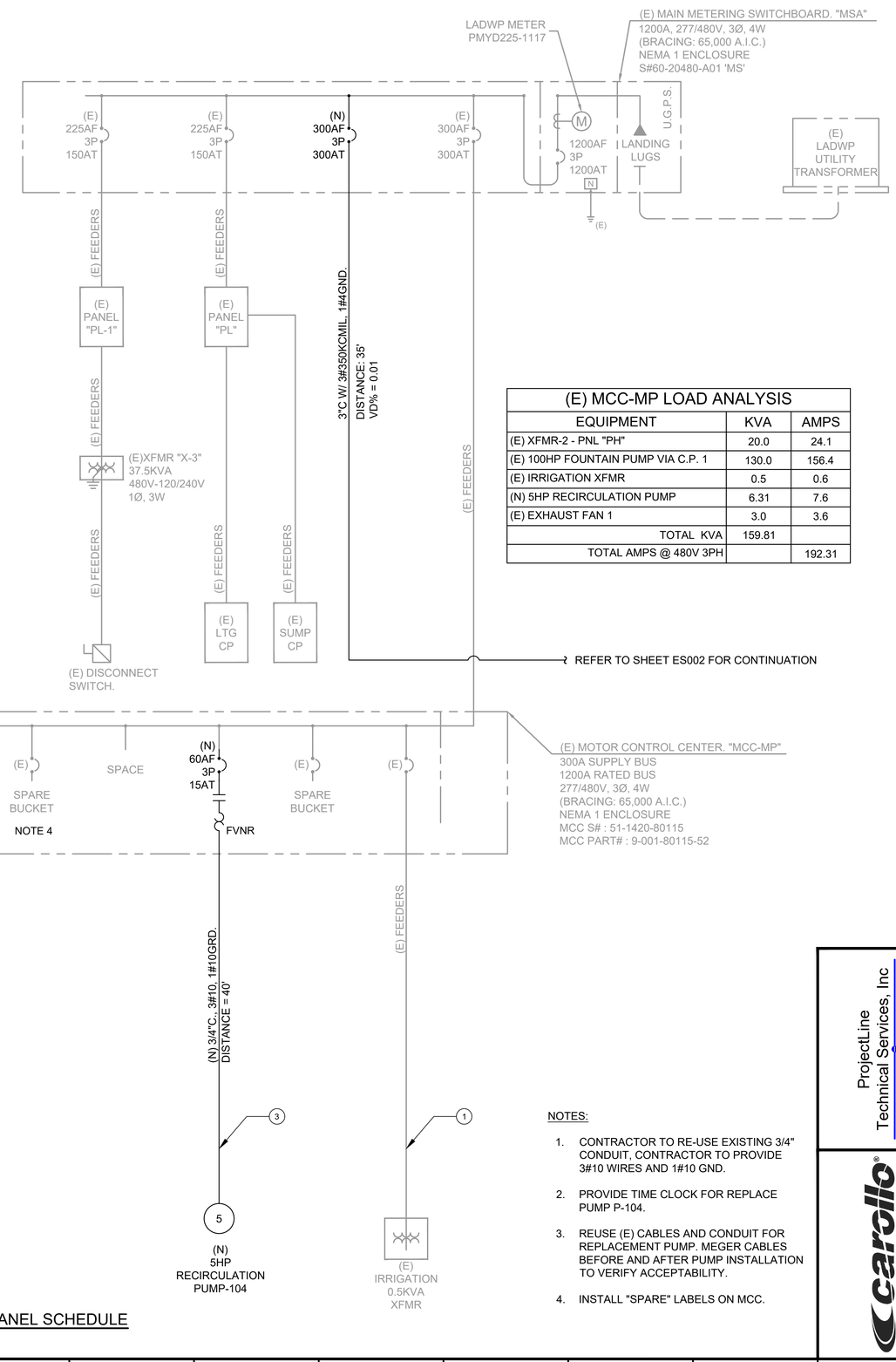

(E) MCC-MP LOAD ANALYSIS

EQUIPMENT	KVA	AMPS
(E) XFMR-2 - PNL "PH"	20.0	24.1
(E) 100HP FOUNTAIN PUMP VIA C.P. 1	130.0	156.4
(E) IRRIGATION XFMR	0.5	0.6
(N) 5HP RECIRCULATION PUMP	6.31	7.6
(E) EXHAUST FAN 1	3.0	3.6
TOTAL KVA	159.81	
TOTAL AMPS @ 480V 3PH		192.31

NOTES:

1. CONTRACTOR TO RE-USE EXISTING 3/4" CONDUIT, CONTRACTOR TO PROVIDE 3#10 WIRES AND 1#10 GND.
2. PROVIDE TIME CLOCK FOR REPLACE PUMP P-104.
3. REUSE (E) CABLES AND CONDUIT FOR REPLACEMENT PUMP. MEGER CABLES BEFORE AND AFTER PUMP INSTALLATION TO VERIFY ACCEPTABILITY.
4. INSTALL "SPARE" LABELS ON MCC.

NEW SINGLE LINE DIAGRAM & PANEL SCHEDULE

ProjectLine
Technical Services, Inc.

carollo

ENGINEERING
CITY OF LOS ANGELES
Environmental Engineering Division

THIS PLAN WAS ELECTRONICALLY SIGNED AND STAMPED

REGISTERED PROFESSIONAL ENGINEER ROBERT D. GETTER No. E 21586 Exp. 06-30-27 ELECTRICAL

BUREAU OF ENGINEERING
VERTICAL CONTROL:
HORIZONTAL CONTROL:
SHEET TITLE: SINGLE LINE DIAGRAM & PANEL SCHEDULE 1
PROJECT: MACARTHUR LAKE STORMWATER CAPTURE PROJECT
ADDRESS: MACARTHUR PARK 2230 6TH ST LOS ANGELES CA 90057

DEPARTMENT OF PUBLIC WORKS
CITY OF LOS ANGELES

NO.	REVISIONS	DATE	BY
1	USE EXISTING CONDUIT, CONTRACTOR TO PROVIDE 3#10 WIRES AND 1#10 GND		

CIP NO. 1920R004
INDEX NO. D-XXXXX

DESIGN GROUP		DATE
ENGINEER:	ROBERT GETTER	01/22/2026
ARCHITECT:		
DESIGNED BY:	HENRY LUONG	01/22/2026
DRAWN BY:	CHARLEY KHUU / PAVEL PETIN	01/22/2026
CHECKED BY:	ROBERT GETTER	01/22/2026
APPROVED BY:	ROBERT GETTER	01/22/2026

WORK ORDER
S33WMLRP, S043MSWC, S343MSWC

SHEET NAME
ES001
SHEET 71 OF 108 SHEETS

THE CITY OF LOS ANGELES OR ITS OFFICERS OR AGENTS SHALL NOT BE RESPONSIBLE FOR THE ACCURACY OR COMPLETENESS OF ELECTRONIC COPIES OF THIS PLAN SHEET.

REVISION DATES (DESIGN STAGE ONLY)

SHEET VERSION 4.0.1 FILE PATH: C:\PW_WORKING\CAROLLO_200000\D0225944\203818ES001.DWG PLOT DATE: 1/15/2026 3:58 PM SAVED: 1/15/2026 3:49 PM SAVED BY:CHARLEY

FINAL DESIGN SUBMITTAL

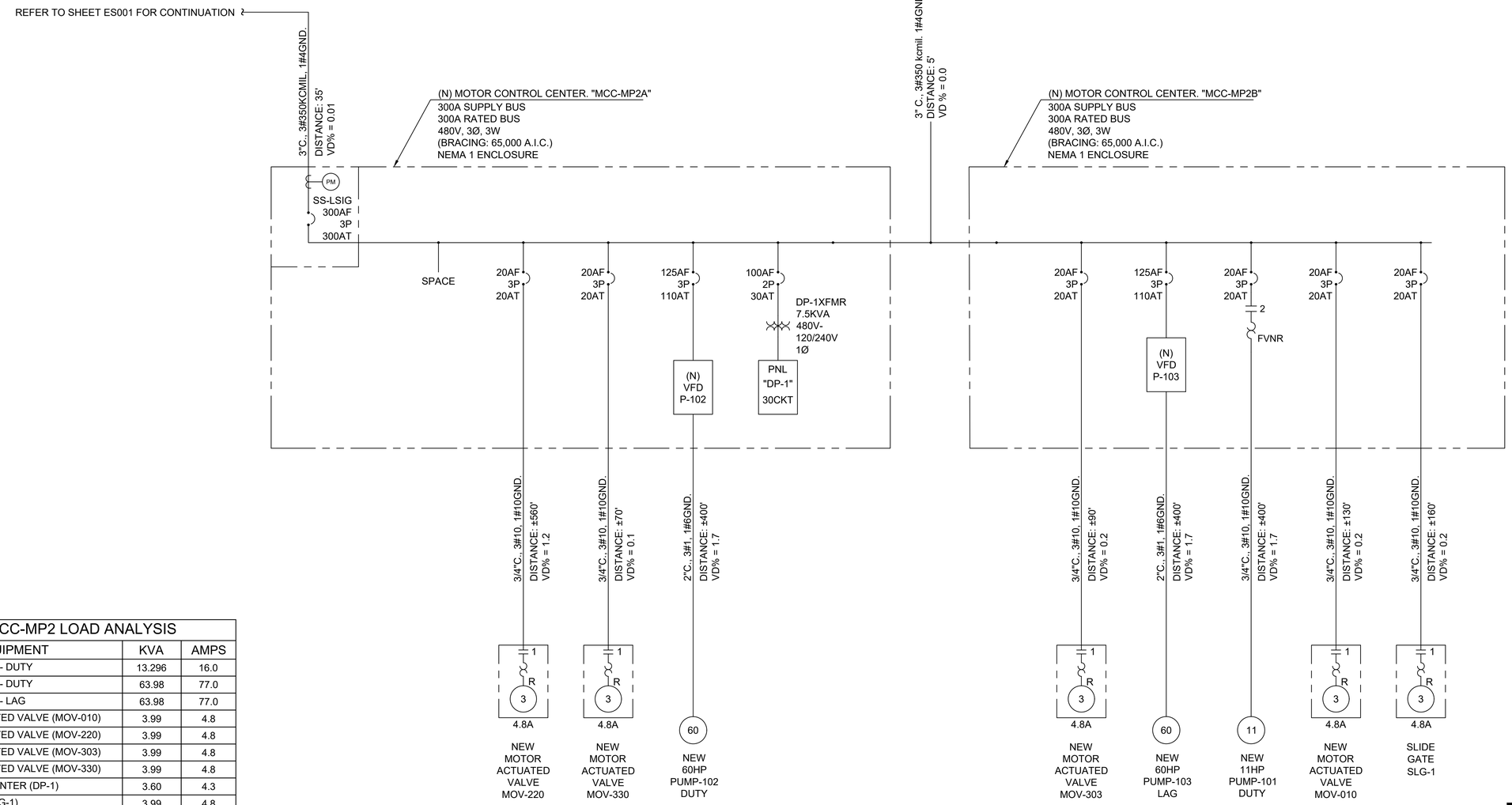

(N) MCC-MP2 LOAD ANALYSIS		
EQUIPMENT	KVA	AMPS
(N) 11HP PUMP 101 - DUTY	13.296	16.0
(N) 60HP PUMP 102 - DUTY	63.98	77.0
(N) 60HP PUMP 103 - LAG	63.98	77.0
(N) MOTOR ACTUATED VALVE (MOV-010)	3.99	4.8
(N) MOTOR ACTUATED VALVE (MOV-220)	3.99	4.8
(N) MOTOR ACTUATED VALVE (MOV-303)	3.99	4.8
(N) MOTOR ACTUATED VALVE (MOV-330)	3.99	4.8
(N) MINI-POWER CENTER (DP-1)	3.60	4.3
(N) SLIDE GATE (SLG-1)	3.99	4.8
TOTAL KVA	156.8	188.7153
125% LARGEST MOTOR	16.0	19.2
TOTAL AMPS @ 480V 3PH	172.8	208.0

THE CITY OF LOS ANGELES OR ITS OFFICERS OR AGENTS SHALL NOT BE RESPONSIBLE FOR THE ACCURACY OR COMPLETENESS OF ELECTRONIC COPIES OF THIS PLAN SHEET.

REVISION DATES
(DESIGN STAGE ONLY)

ENGINEERING
CITY OF LOS ANGELES
Environmental Engineering Division

THIS PLAN WAS ELECTRONICALLY SIGNED AND STAMPED

REGISTERED PROFESSIONAL ENGINEER
ROBERT D. GETTER
No. E 21884
Exp. 06-30-27
ELECTRICAL

BUREAU OF ENGINEERING
VERTICAL CONTROL:
HORIZONTAL CONTROL:
SHEET TITLE: SINGLE LINE DIAGRAM & PANEL SCHEDULE 2
PROJECT: MACARTHUR LAKE STORMWATER CAPTURE PROJECT
ADDRESS: MACARTHUR PARK
2230 6TH ST LOS ANGELES CA 90057

DEPARTMENT OF PUBLIC WORKS
CITY OF LOS ANGELES

NO.	REVISIONS	DATE	BY

CIP NO.
1920R004

INDEX NO.
D-XXXXX

DESIGN GROUP		DATE
ENGINEER:	ROBERT GETTER	01/22/2026
ARCHITECT:		
DESIGNED BY:	HENRY LUONG	01/22/2026
DRAWN BY:	CHARLEY KHUU / PAVEL PETIN	01/22/2026
CHECKED BY:	ROBERT GETTER	ROBERT MORRONI 01/22/2026
APPROVED BY:	ROBERT GETTER	01/22/2026

ProjectLine
Technical Services, Inc.

carollo

WORK ORDER
S33WMLRP, S043MSWC,
S343MSWC

SHEET NAME
ES002
SHEET 72 OF 108 SHEETS

FINAL DESIGN SUBMITTAL

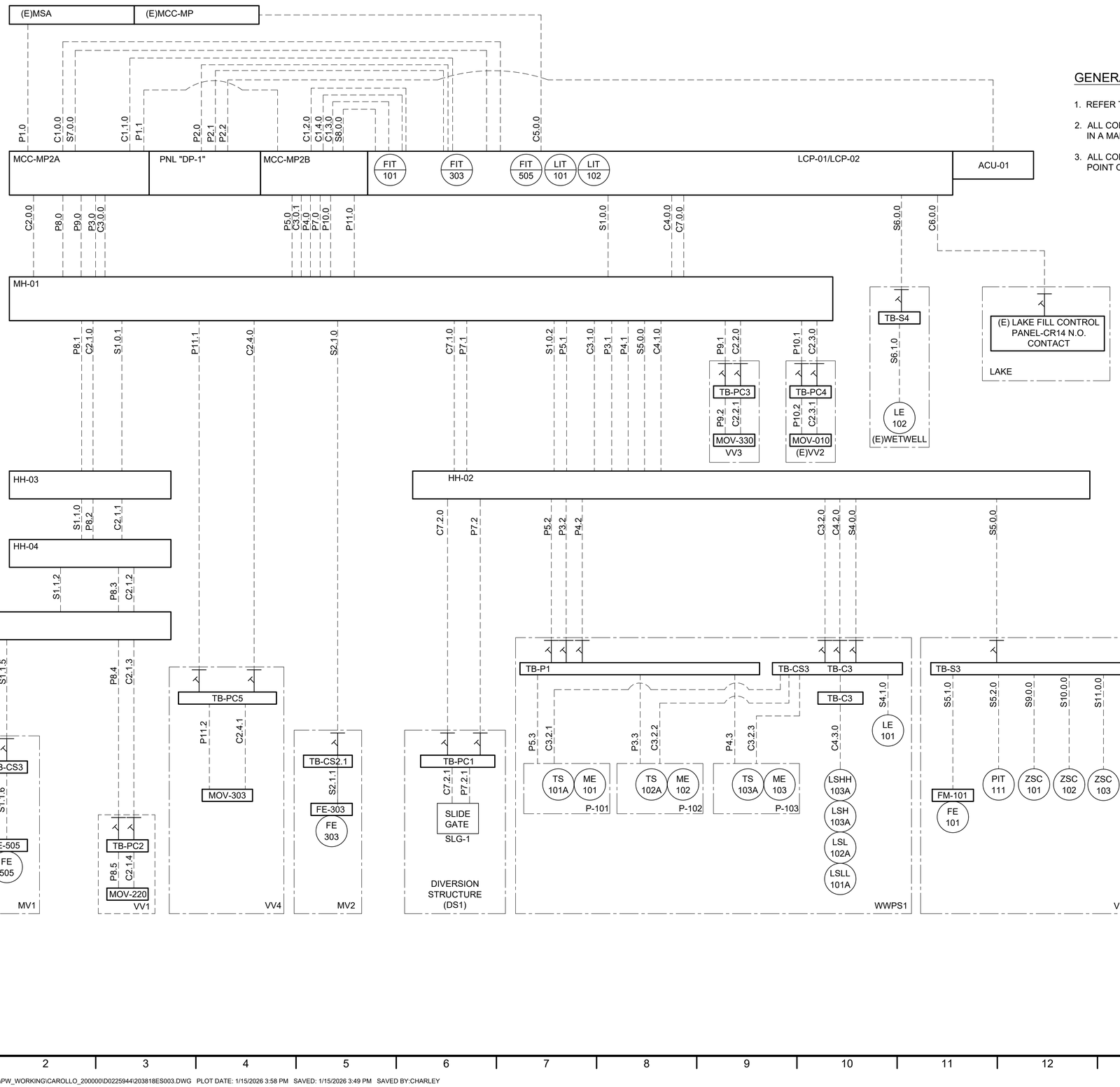

GENERAL NOTES:

1. REFER TO SHEET EP021 FOR CONDUIT AND CABLE SCHEDULE.
2. ALL CONDUITS ORIGINATING AT PUMPSTATION WETWELL, SHALL BE INSTALLED IN A MANNER SUITABLE FOR CLASS I DIVISION 1 AREA FROM WETWELL.
3. ALL CONDUITS ENTERING TERMINATION BOXES SHALL BE SEALED AT THE POINT OF ENTRANCE.

ENGINEERING
CITY OF LOS ANGELES
Environmental Engineering Division

THIS PLAN WAS ELECTRONICALLY SIGNED AND STAMPED

REGISTERED PROFESSIONAL ENGINEER ★ ROBERT D. GETTER ★ No. E 21584 ★ Exp. 06-30-27 ★ CIVIL ★ STATE OF CALIFORNIA

BUREAU OF ENGINEERING
VERTICAL CONTROL:
HORIZONTAL CONTROL:
SHEET TITLE: CONDUIT DEVELOPMENT
PROJECT: MACARTHUR LAKE STORMWATER CAPTURE PROJECT
ADDRESS: MACARTHUR PARK 2230 6TH ST LOS ANGELES CA 90057

DEPARTMENT OF PUBLIC WORKS

NO.	REVISIONS	DATE	BY

CIP NO. 1920R004

INDEX NO. D-XXXXX

CITY OF LOS ANGELES

DESIGN GROUP	DATE
ENGINEER: ROBERT GETTER	01/22/2026
ARCHITECT:	01/22/2026
DESIGNED BY: HENRY LUONG	01/22/2026
DRAWN BY: CHARLEY KHUU / PAVEL PETIN	01/22/2026
CHECKED BY: ROBERT GETTER ROBERT MORRONI	01/22/2026
APPROVED BY: ROBERT GETTER	01/22/2026

WORK ORDER
S33WMLRP, S043MSWC, S343MSWC

SHEET NAME
ES003
SHEET 73 OF 108 SHEETS

ProjectLine
Technical Services, Inc

carollo

REVISION DATES (DESIGN STAGE ONLY)

THE CITY OF LOS ANGELES OR ITS OFFICERS OR AGENTS SHALL NOT BE RESPONSIBLE FOR THE ACCURACY OR COMPLETENESS OF ELECTRONIC COPIES OF THIS PLAN SHEET.

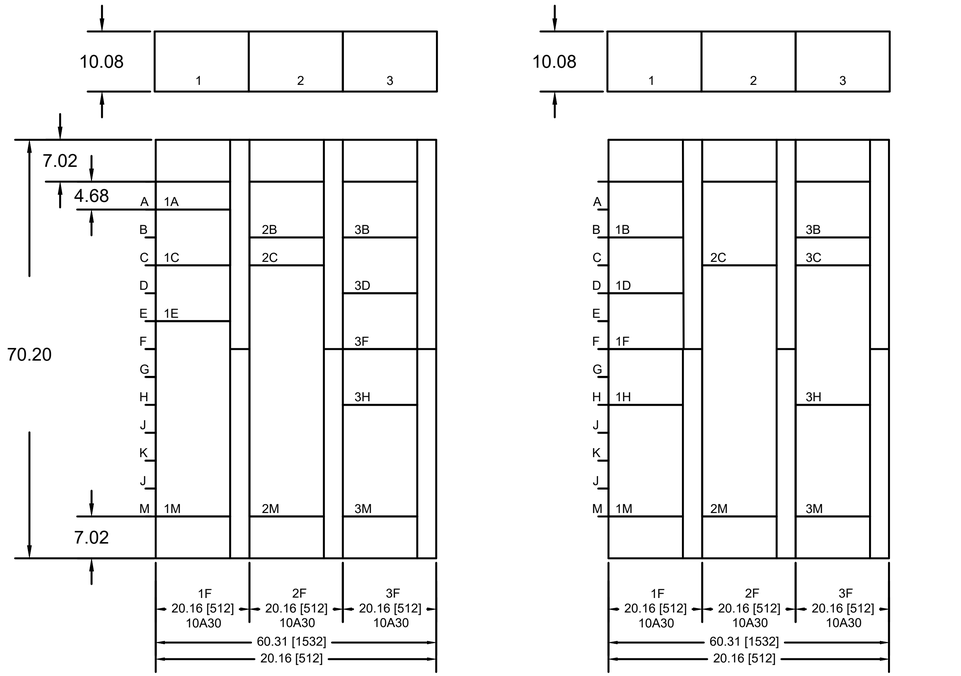

MCC-MP2B (FRONT)
ELEVATION

MCC-MP2A (BACK)
ELEVATION

MCC-MP2A												
(N) DP-1	SERVICE		120/240V 1PH, 3W		BUS RATING		30 MCB		LOCATION			PUMP STATION 1
	PANEL TYPE		NEMA-1		A.I.C. RATING		10,000 AIC FULLY RATED		MOUNTING TYPE:			WITH-IN MCC1
						PHASE						
DESCRIPTION		AMPS	"LOAD (KVA)"	CB/P	CKT#	A	B	CKT#	CB/P	"LOAD (KVA)"	AMPS	DESCRIPTION
CONTROL CABINET LCP-01/PLC-01		10.00	1.200	20/1P	1	■		2	20/1P	1.200	10.00	AIR CONDITIONER CONTROL PANEL
TC-104		1.00	0.120	20/1P	3		■	4	20/1P	0.000	0.00	SPARE
SPARE		0.00	0.000	20/1P	5	■		6	20/1P	0.000	0.00	SPARE
SPARE		0.00	0.000	20/1P	7		■	8	20/1P	0.000	0.00	SPARE
SPARE		0.00	0.000	20/1P	9	■		10	20/1P	0.000	0.00	SPARE
SPARE		0.00	0.000	20/1P	11		■	12	20/1P	0.000	0.00	SPARE

LOAD SUMMARY		
PHASE A	1.32	KVA
PHASE B	1.20	KVA
TOTAL CONNECTED KVA		2.52
LARGEST MOTOR 25%		0.00
TOTAL DIVERSIFY KVA		2.52
TOTAL CONNECTED AMPS		10.50
TOTAL DEMAND AMPS		10.50

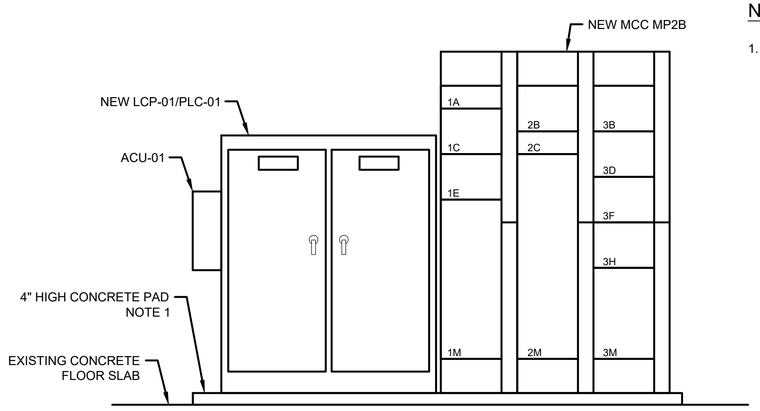

PANELS ELEVATION

NOTE:

1. INSTALL 4" CONCRETE PAD ON EXISTING PUMP HOUSE SLAB PER E-16/ EP016.

MCC-MP2A				
UNITS	NAMEPLATE	DESCRIPTION	BKR/SW POLES TRIP/CLIP	UNIT FEATURES
1B	MOV-440	HFD BKR (20A TRIP)	HFD 3P 20	1 STANDARD TRIP
1D				
1F	MOV-220	HFD BKR (20A TRIP)	HFD 3P 20	1 STANDARD TRIP
1H	MOV-330	HFD BKR (20A TRIP)	HFD 3P 20	1 STANDARD TRIP
1M	MCC-MP2A to	#2-600KCMIL 4/PH SUB FEED KUGS (SCREW)		
2C		PXM3000		
2M	P-102	DG1 18-PULS VFD, CONSTANT TORQUE, 72 FLA, 480V, HMCP	HMCP 3P 110	1-STANDARD TRIP, 1-KEYPAD (INCLUDED), 1-OUTPUT REATOR (INCLUDED)
3B	DP-1 XFMR PRI. MAIN	HFD BKR (20A TRIP)	HFD 3P 30	1 STANDARD TRIP
3C		6" DOOR		
3H	DP-1	PL1A PANELBOARD 225A 120/240V 1HP 3W 30 CKT		
3M	DP1-XFMR	7.5 KVA 1 PH, 440-480V/120-240V STANDARD EFFICIENCY XFMR, 30A PRI. BRK.		

MCC-MP2B				
UNITS	NAMEPLATE	DESCRIPTION	BKR/SW POLES TRIP/CLIP	UNIT FEATURES
1A		SPACE		
1C		12" DOOR		
1E	P-101	HFD BKR (20A TRIP) SIZE 1 FVNR STARTER	HFD 3P 20	1 STANDARD TRIP
1M		HKD MAIN BRK (300 A TRIP), LUGS: 1-#250-500 KCMIL	HKD 3P 300	2 RMS 310 + LSI "G" TRIP
2B	MOV-010	HFD BRK (30AT TRIP)	HFD 3P 30	1 STANDARD TRIP
2C		6" DOOR		
2M	P-103	DG1 VFD, CONSTANT TORQUE, 72 FLA, 480V, HMCP	HFD 3P 110	1-STANDARD TRIP, 1-KEYPAD (INCLUDED), 1-OUTPUT REATOR (INCLUDED)
3B	MOV-303	HFD BRK (20A TRIP)	HFD 3P 20	1 STANDARD TRIP
3D		12" DOOR		
3F		12" DOOR		
3H		12" DOOR		
3M	MCC-MP2B to	#2-600 KCMIL 4 / PH SUB FEED LUGS (SCREW)		

ENGINEERING
CITY OF LOS ANGELES
Environmental Engineering Division

THIS PLAN WAS ELECTRONICALLY SIGNED AND STAMPED

REGISTERED PROFESSIONAL ENGINEER ROBERT D. GETTER No. E 21884 Exp. 06-30-27 ELECTRICAL

BUREAU OF ENGINEERING
VERTICAL CONTROL:
HORIZONTAL CONTROL:
SHEET TITLE: PANEL ELEVATION AND PANEL SCHEDULE
PROJECT: MACARTHUR LAKE STORMWATER CAPTURE PROJECT
ADDRESS: MACARTHUR PARK 2230 6TH ST LOS ANGELES CA 90057

DEPARTMENT OF PUBLIC WORKS
CITY OF LOS ANGELES

NO	REVISIONS	DATE	BY

CIP NO. 1920R004
INDEX NO. D-XXXXX

DESIGN GROUP	DATE
ENGINEER: ROBERT GETTER	01/22/2026
ARCHITECT:	
DESIGNED BY: HENRY LUONG	01/22/2026
DRAWN BY: CHARLEY KHUU / PAVEL PETIN	01/22/2026
CHECKED BY: ROBERT GETTER	01/22/2026
APPROVED BY: ROBERT GETTER	01/22/2026

ProjectLine
Technical Services, Inc

carollo

WORK ORDER
S33WMLRP, S043MSWC, S343MSWC

SHEET NAME
ES004
SHEET 74 OF 108 SHEETS

REVISION DATES (DESIGN STAGE ONLY)

THE CITY OF LOS ANGELES OR ITS OFFICERS OR AGENTS SHALL NOT BE RESPONSIBLE FOR THE ACCURACY OR COMPLETENESS OF ELECTRONIC COPIES OF THIS PLAN SHEET.

FINAL DESIGN SUBMITTAL

THE CITY OF LOS ANGELES OR ITS OFFICERS OR AGENTS SHALL NOT BE RESPONSIBLE FOR THE ACCURACY OR COMPLETENESS OF ELECTRONIC COPIES OF THIS PLAN SHEET.

MACARTHUR PARK LAKE

PROPOSED WATER FEATURES

(E) PLAYGROUND

DIVERSION LINE DISCHARGE CONNECTION AT LAKE

24" RCP DIVERSION LINE TO LAKE (GRAVITY)

6" DIP PRESSURE RECIRCULATION LINE TO WATER FEATURES (350 GPM)

HAZARDOUS CLASSIFIED AREA. CLASS 1, DIV. 2

24" FLOW METER (MV1)

24" ACTUATED VALVE (VV1)

SECONDARY TREATMENT UNIT (STU1)

SECONDARY TREATMENT UNIT (STU2)

4 EP004

5 EP005

7TH STREET

18" DIP PRESSURE DIVERSION LINE TO LAKE (PRESSURE)

NEW 16" ACTUATED VALVE IN EXISTING VALVE VAULT (VV2)

(E) PUMP HOUSE

HAZARDOUS CLASSIFIED AREA. CLASS 1, DIV. 2

1 EP001

24" ACTUATED VALVE (VV3)

12" ACTUATED VALVE (VV4)

12" FLOW METER (MV2)

18" DIP DIVERSION LINE TO LAKE (PRESSURE)

12" RCP LAKE OVERFLOW RETURN LINE TO SANITARY SEWER (GRAVITY)

2 EP002

CONNECT TO EXIST SMH FOR 48" SANITARY SEWER

SEE SHEETS ES006 AND ES007 FOR DUCTBANK PLANS AND PROFILES

HAZARDOUS CLASSIFIED AREA. CLASS 1, DIV. 2

VALVE AND METER VAULT STRUCTURE (MV1)

WETWELL PUMP STATION (WWPS1)

PRETREATMENT UNIT (PT1)

DIVERSION STRUCTURE (DS1)

3 EP003

24" GRAVITY RCP RETURN LINE TO EXIST 54" STORM DRAIN

CONNECTION TO 54" STORM DRAIN

PARK VIEW STREET

GRAND VIEW STREET

LAKE STREET

NOTES:

1. TREE PROTECTION ZONES ARE IDENTIFIED HEREIN ON THE PLANS WITH CIRCLES AROUND EXISTING TREES. CONTRACTOR SHALL AVOID CONSTRUCTION WITHIN TREE PROTECTION ZONES AS MUCH AS PRACTICAL, AND STAKE PROPOSED DUCTBANK ALIGNMENTS IN THE FIELD WITH THE CITY TO PROTECT EXISTING TREES. CONDUIT ROUTING SHOWN HEREIN IS DIAGRAMMATIC, AND CONTRACTOR SHALL PREPARE DETAILED CONDUIT, DUCTBANK, AND EQUIPMENT LOCATION PLANS FOR CITY REVIEW, INCLUDING PROPOSED CONDUIT ROUTING THAT PROTECTS TREES. WHERE REQUIRED TO ROUTE CONDUITS OUTSIDE TREE PROTECTION ZONES, CONTRACTOR SHALL PROVIDE UP TO 10 ADDED BURIED ELECTRICAL PULLBOXES, IN ADDITION TO THOSE SHOWN ON THE PLANS HEREIN, AT NO ADDED COST TO THE CITY.
2. BURIED ELECTRICAL PULLBOXES AND HANDHOLES SHALL BE PRECAST CONCRETE WITH CAST IRON OR CORROSION RESISTANT STEEL LIDS ON METAL FRAMES, SUCH THAT THEY CAN BE WELDED SHUT AND COMPLY WITH NEC 314.30, AND BE UL LISTED. LID SHALL BE MARKED AS "POWER" OR "SIGNAL" AS APPROPRIATE AND TOP OF LID TO BE FLUSH WITH FINISHED GRADE. PROVIDE ALL PULLBOXES AND HANDHOLES MINIMUM SIZES AT 10" x17"x30" DEEP. PROVIDE LIDS WITH H20 TRAFFIC RATING. PULLBOXES AND HANDHOLES SHALL BE BY CHRISTY, OLDCASTLE, JENSEN OR EQUAL.
3. PROVIDE ELECTRICAL DEVICES AND EQUIPMENT IN HAZARDOUS AREAS THAT ARE APPROVED FOR THE CLASSIFICATION DESIGNATED ON THE DRAWINGS PER NFPA 820.
4. INSTALL ALL EXPLOSION PROOF AND INTRINSICALLY SAFE DEVICES AS RECOMMENDED BY MANUFACTURERS AND IN COMPLIANCE WITH NEC ARTICLE 500 "HAZARDOUS LOCATIONS."
5. SEGREGATE INTRINSICALLY SAFE WIRING FROM NON-INTRINSICALLY SAFE IN CONDUITS AND ENCLOSURES.
6. INSTALL CONDUIT SEALS AS REQUIRED BY NEC SECTION 500.

LEGEND

- CONCRETE ENCASED DUCTBANK
- BURIED CONDUIT
- TREE PROTECTION ZONE, SEE SHEET LS100

OVERALL SITE PLAN

30' 15' 0 30' 60'

SCALE: 1" = 30'

ProjectLine
Technical Services, Inc

carollo

ENGINEERING
CITY OF LOS ANGELES
Environmental Engineering Division

THIS PLAN WAS ELECTRONICALLY SIGNED AND STAMPED

REGISTERED PROFESSIONAL ENGINEER ROBERT D. GETTER No. E 21884 Exp. 06-30-27 CIVIL

BUREAU OF ENGINEERING

VERTICAL CONTROL:
HORIZONTAL CONTROL:

SHEET TITLE: ELECTRICAL SITE PLAN - OVERALL

PROJECT: MACARTHUR LAKE STORMWATER CAPTURE PROJECT

ADDRESS: MACARTHUR PARK
2230 6TH ST LOS ANGELES CA 90057

DEPARTMENT OF PUBLIC WORKS

NO.	REVISIONS	DATE	BY

CIP NO. 1920R004

INDEX NO. D-XXXXX

CITY OF LOS ANGELES

	DESIGN GROUP	DATE
ENGINEER:	ROBERT GETTER	01/22/2026
ARCHITECT:		01/22/2026
DESIGNED BY:	HENRY LUONG	01/22/2026
DRAWN BY:	CHARLEY KHUU / PAVEL PETIN	01/22/2026
CHECKED BY:	ROBERT GETTER ROBERT MORRONI	01/22/2026
APPROVED BY:	ROBERT GETTER	01/22/2026

WORK ORDER
S33WMLRP, S043MSWC, S343MSWC

SHEET NAME
ES005

SHEET 75 OF 108 SHEETS

REVISION DATES (DESIGN STAGE ONLY)

FINAL DESIGN SUBMITTAL

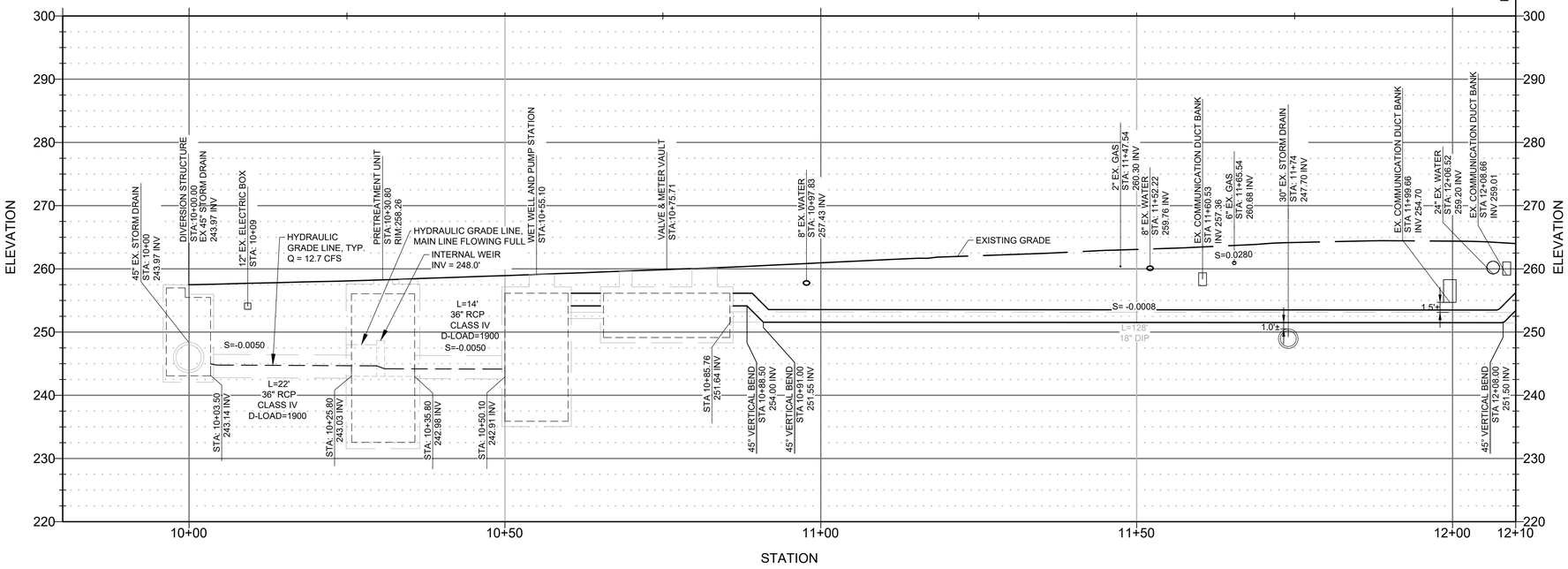

PROFILE VIEW: ELECTRICAL DUCTBANK (STA 10+00 TO STA 12+10)

HORIZONTAL SCALE: 1" = 10'
VERTICAL SCALE 1" = 10'

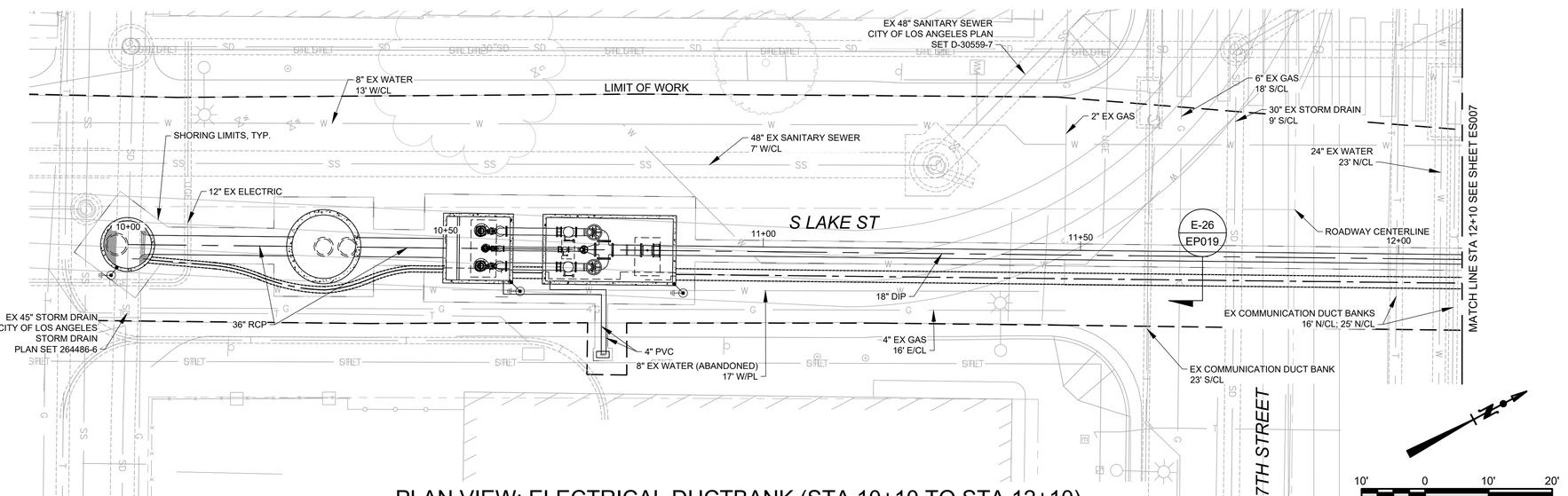

PLAN VIEW: ELECTRICAL DUCTBANK (STA 10+10 TO STA 12+10)

SCALE: 1" = 10'

LEGEND

1 — CONSTRUCTION NOTE

1 — KEY NOTE

TREE PROTECTION ZONE, SEE SHEET LS100

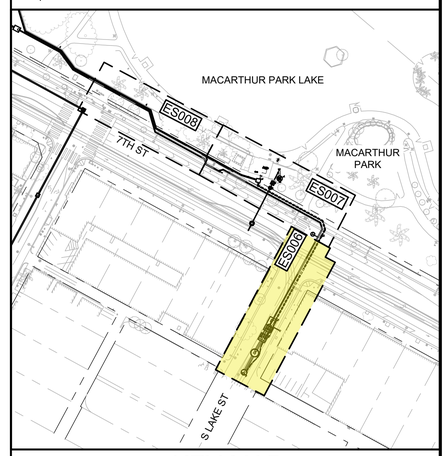

KEY MAP

NO SCALE

NOTE:

1. ELECTRICAL DUCTBANK WILL BE INSTALLED IN PARALLEL WITH NEW PUMP DISCHARGE PIPELINE. REFER TO CIVIL DRAWINGS FOR COORDINATION.
2. CONTRACTOR SHALL CONTACT DIG ALERT (811) AND VERIFY THAT ALL UNDERGROUND UTILITIES ARE MARKED PRIOR TO ANY EXCAVATION. CONTRACTOR SHALL POTHOLE TO CONFIRM LOCATION AND DEPTH OF ALL MARKED UTILITIES IN DUCTBANK PATH. IF CONFLICTS ARISE, CONTRACTOR SHALL SUBMIT A FIELD-ADJUSTED DUCTBANK ROUTING PLAN TO THE ENGINEER OF RECORD FOR REVIEW PRIOR TO COMMENCEMENT OF ANY EXCAVATION OR TRENCHING ACTIVITIES. LADWP REQUIRES MINIMUM OF 6" VERTICAL CLEARANCE AND MINIMUM 12" HORIZONTAL CLEARANCE FROM HIGH-VOLTAGE UNDERGROUND LADWP LINES. CONTRACTOR SHALL STAKE THE DUCTBANK WITH LARAP(LOS ANGELES RECREATION AND PARKS) FOR APPROVAL TO COMMENCE.

ProjectLine
Technical Services, Inc

carollo

ENGINEERING
CITY OF LOS ANGELES
Environmental Engineering Division

PROFESSIONAL ENGINEER ★ ROBERT D. GETTER ★ No. E 21884 ★ Exp. 06-30-27 ★ REGISTERED CIVIL ENGINEER ★ CALIFORNIA

• THIS PLAN WAS ELECTRONICALLY SIGNED AND STAMPED •

BUREAU OF ENGINEERING

VERTICAL CONTROL:
HORIZONTAL CONTROL:

SHEET TITLE: PLAN & PROFILE - PUMP STATION
PROJECT: MACARTHUR LAKE STORMWATER CAPTURE PROJECT
ADDRESS: MACARTHUR PARK
2230 6TH ST LOS ANGELES CA 90057

DEPARTMENT OF PUBLIC WORKS

NO	REVISIONS	DATE	BY

CIP NO. 1920R004

INDEX NO. D-XXXXX

DESIGN GROUP	DATE
ENGINEER: ROBERT GETTER	01/22/2026
ARCHITECT:	
DESIGNED BY: HENRY LUONG	01/22/2026
DRAWN BY: CHARLEY KHUU / PAVEL PETIN	01/22/2026
CHECKED BY: ROBERT GETTER	01/22/2026
APPROVED BY: ROBERT GETTER	01/22/2026

CITY OF LOS ANGELES

WORK ORDER
S33WMLRP, S043MSWC, S343MSWC

SHEET NAME
ES006

SHEET 76 OF 108 SHEETS

FINAL DESIGN SUBMITTAL

REVISION DATES (DESIGN STAGE ONLY)

THE CITY OF LOS ANGELES OR ITS OFFICERS OR AGENTS SHALL NOT BE RESPONSIBLE FOR THE ACCURACY OR COMPLETENESS OF ELECTRONIC COPIES OF THIS PLAN SHEET.

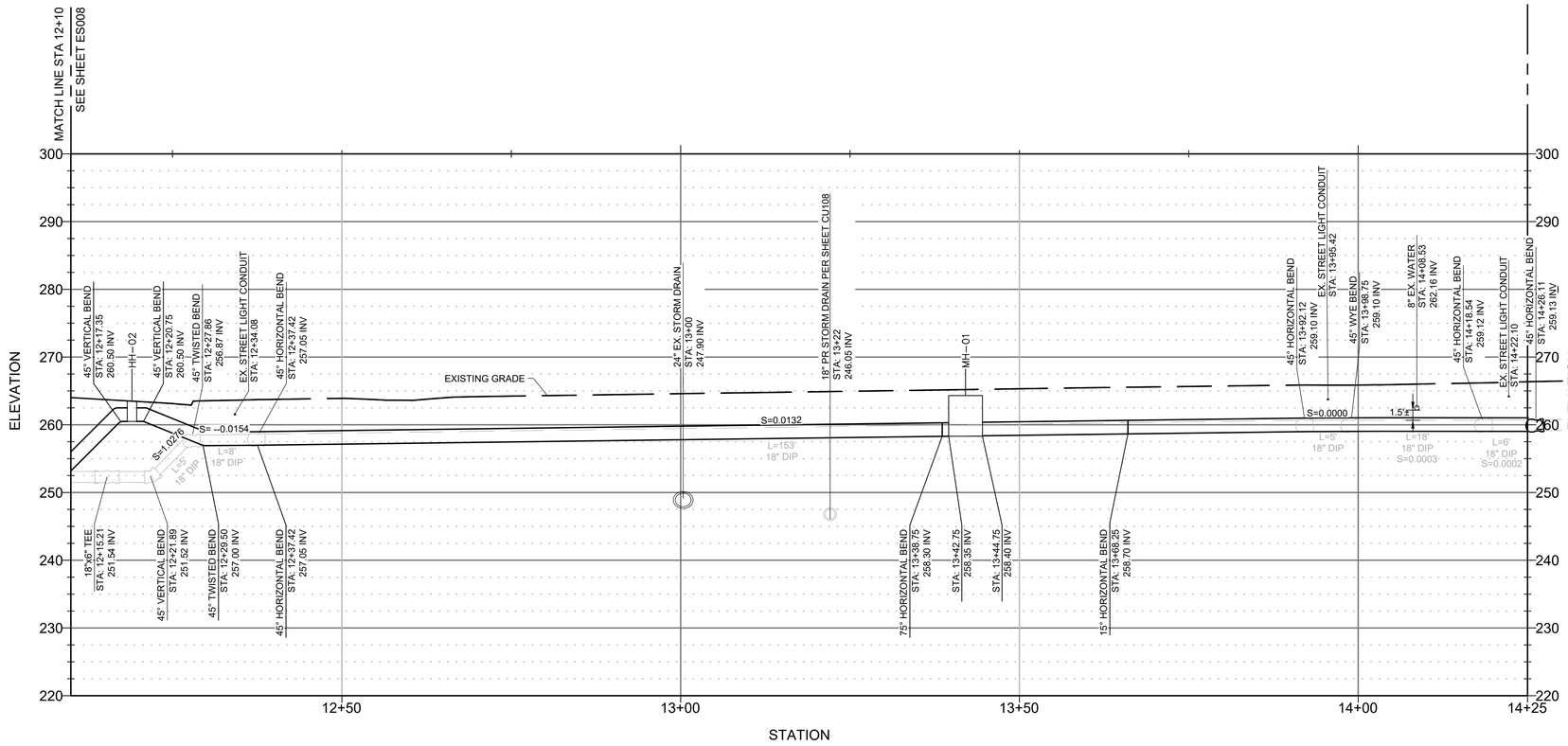

PROFILE VIEW: ELECTRICAL DUCTBANK (STA 12+10 TO STA 14+25)

HORIZONTAL SCALE: 1" = 10'
VERTICAL SCALE 1" = 10'

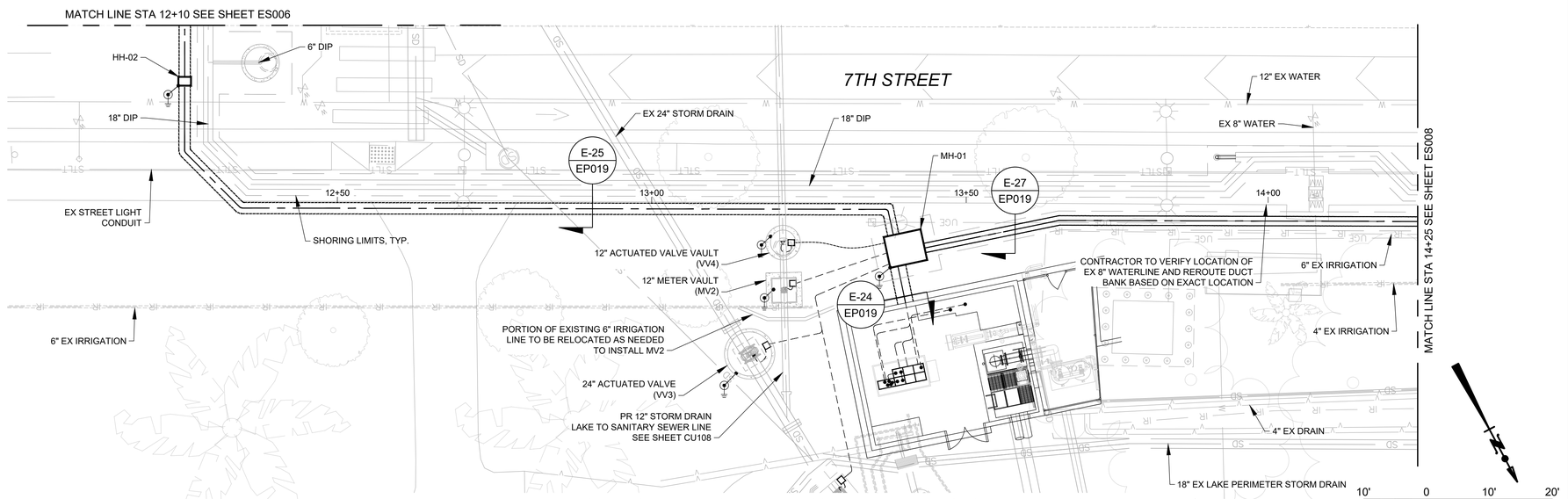

PLAN VIEW: ELECTRICAL DUCTBANK (STA 12+10 TO STA 14+25)

SCALE: 1" = 10'

LEGEND

1 CONSTRUCTION NOTE
1 KEY NOTE
TREE PROTECTION ZONE, SEE SHEET LS100

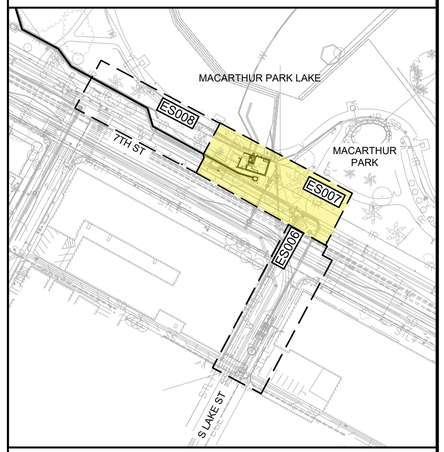

KEY MAP

NO SCALE

NOTE:

1. ELECTRICAL DUCTBANK WILL BE INSTALLED IN PARALLEL WITH NEW PUMP DISCHARGE PIPELINE. REFER TO CIVIL DRAWINGS FOR COORDINATION.
2. CONTRACTOR SHALL CONTACT DIG ALERT (811) AND VERIFY THAT ALL UNDERGROUND UTILITIES ARE MARKED PRIOR TO ANY EXCAVATION. CONTRACTOR SHALL POTHOLE TO CONFIRM LOCATION AND DEPTH OF ALL MARKED UTILITIES IN DUCTBANK PATH. IF CONFLICTS ARISE, CONTRACTOR SHALL SUBMIT A FIELD-ADJUSTED DUCTBANK ROUTING PLAN TO THE ENGINEER OF RECORD FOR REVIEW PRIOR TO COMMENCEMENT OF ANY EXCAVATION OR TRENCHING ACTIVITIES. LADWP REQUIRES MINIMUM OF 6" VERTICAL CLEARANCE AND MINIMUM 12" HORIZONTAL CLEARANCE FROM HIGH-VOLTAGE UNDERGROUND LADWP LINES. CONTRACTOR SHALL STAKE THE DUCTBANK WITH LARAP(LOS ANGELES RECREATION AND PARKS) FOR APPROVAL TO COMMENCE.

ProjectLine
Technical Services, Inc

carollo

ENGINEERING
CITY OF LOS ANGELES
Environmental Engineering Division

COLIN JAMES SEMLOW 94417 REGISTERED PROFESSIONAL ENGINEER STATE OF CALIFORNIA
• THIS PLAN WAS ELECTRONICALLY SIGNED AND STAMPED •

BUREAU OF ENGINEERING
VERTICAL CONTROL:
HORIZONTAL CONTROL:
SHEET TITLE: PLAN & PROFILE - PUMP HOUSE
PROJECT: MACARTHUR LAKE STORMWATER CAPTURE PROJECT
ADDRESS: MACARTHUR PARK 2230 6TH ST LOS ANGELES CA 90057

DEPARTMENT OF PUBLIC WORKS
NO. | REVISIONS | DATE | BY
CIP NO. 1920R004
INDEX NO. D-XXXXX

CITY OF LOS ANGELES
DESIGN GROUP | DATE
ENGINEER: ROBERT GETTER | 01/22/2026
ARCHITECT:
DESIGNED BY: HENRY LUONG | 01/22/2026
DRAWN BY: CHARLEY KHUU / PAVEL PETIN | 01/22/2026
CHECKED BY: ROBERT GETTER | ROBERT MORRONI | 01/22/2026
APPROVED BY: ROBERT GETTER | 01/22/2026

WORK ORDER
S33WMLRP, S043MSWC, S343MSWC

SHEET NAME
ES007
SHEET 77 OF 108 SHEETS

REVISION DATES (DESIGN STAGE ONLY)

THE CITY OF LOS ANGELES OR ITS OFFICERS OR AGENTS SHALL NOT BE RESPONSIBLE FOR THE ACCURACY OR COMPLETENESS OF ELECTRONIC COPIES OF THIS PLAN SHEET.

FINAL DESIGN SUBMITTAL

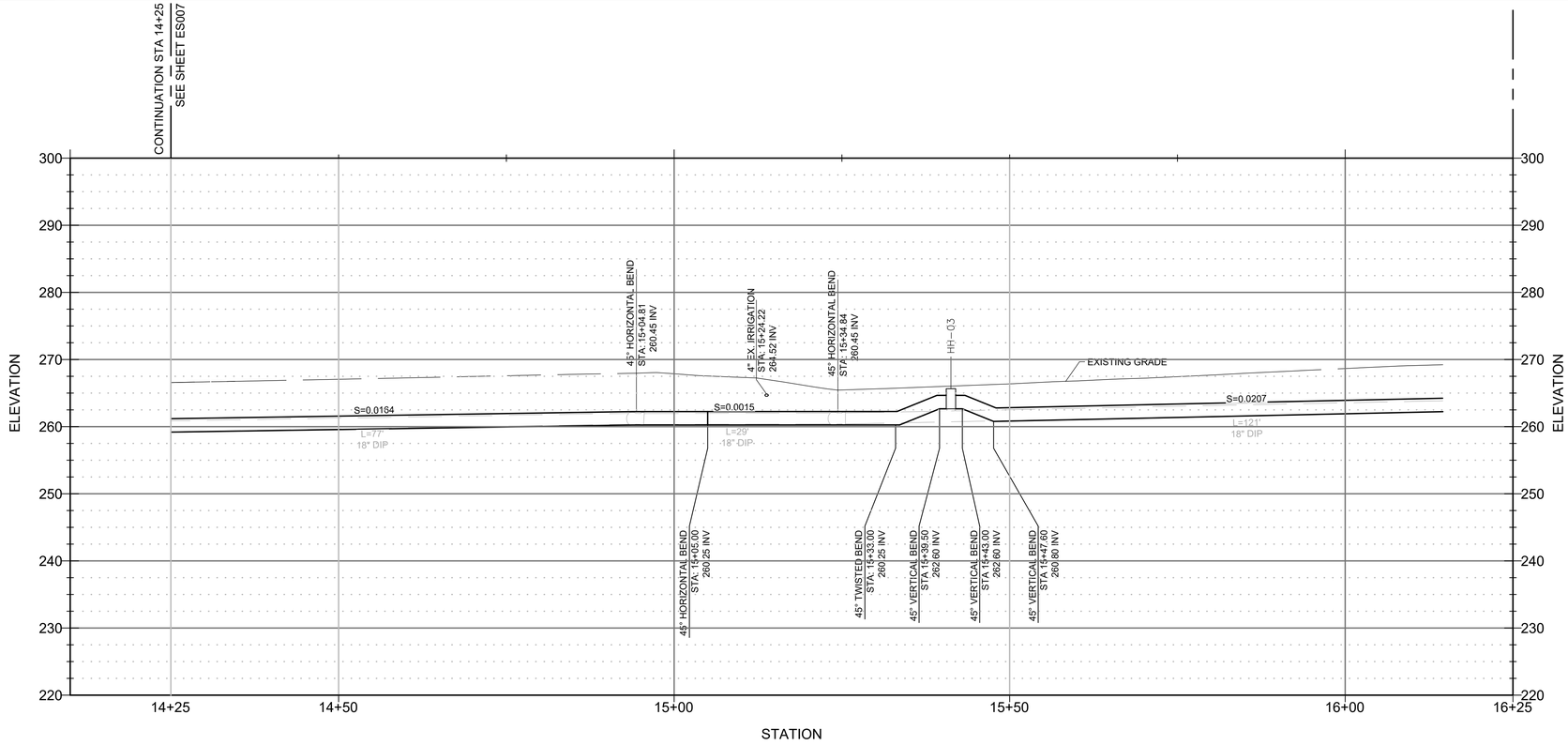

PROFILE VIEW: ELECTRICAL DUCTBANK (STA 14+30 TO STA 16+25)

HORIZONTAL SCALE: 1" = 10'
VERTICAL SCALE 1" = 10'

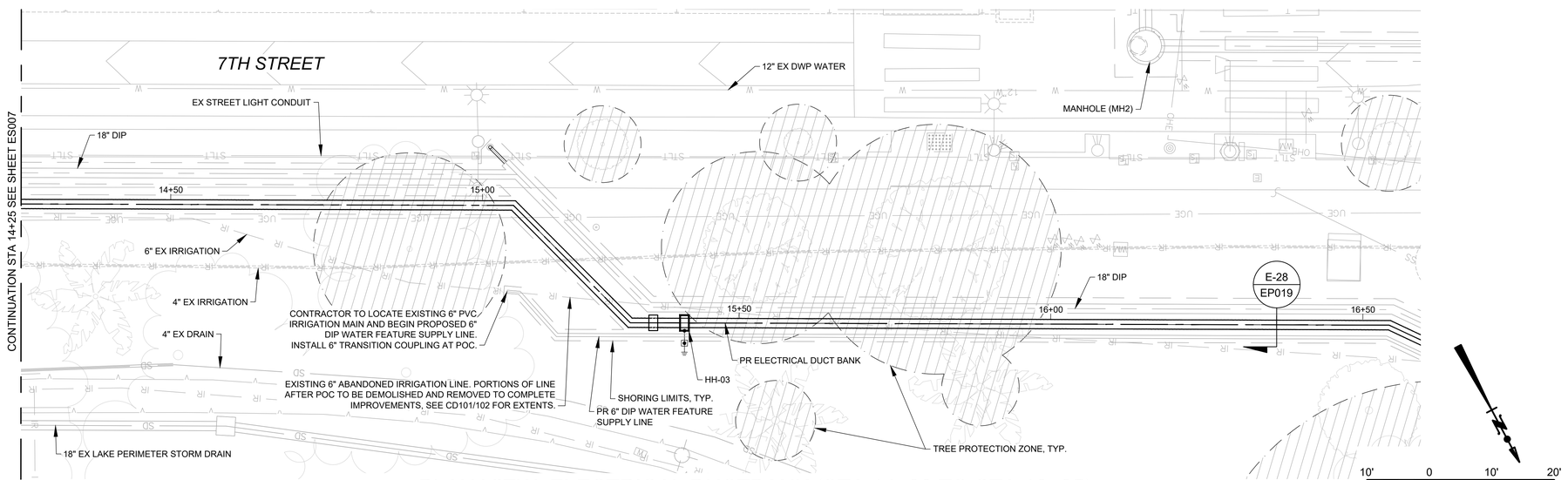

PLAN VIEW: ELECTRICAL DUCTBANK (STA 14+30 TO STA 16+25)

SCALE: 1" = 10'

LEGEND

1 CONSTRUCTION NOTE
1 KEY NOTE
TREE PROTECTION ZONE, SEE SHEET LS100

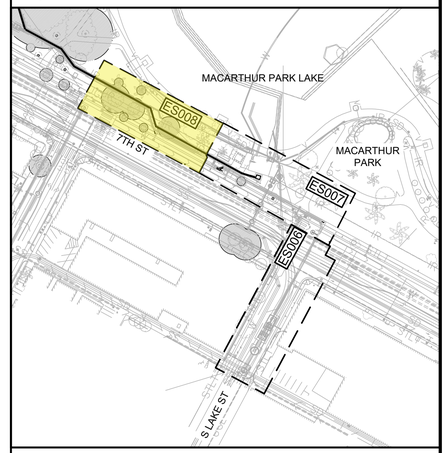

KEY MAP

NO SCALE

NOTE:

1. ELECTRICAL DUCTBANK WILL BE INSTALLED IN PARALLEL WITH NEW PUMP DISCHARGE PIPELINE. REFER TO CIVIL DRAWINGS FOR COORDINATION.
2. CONTRACTOR SHALL CONTACT DIG ALERT (811) AND VERIFY THAT ALL UNDERGROUND UTILITIES ARE MARKED PRIOR TO ANY EXCAVATION. CONTRACTOR SHALL UP TO 10 POTHOLES TO CONFIRM LOCATION AND DEPTH OF ALL MARKED UTILITIES IN DUCTBANK PATH AT NO ADDED COST TO CITY. IF CONFLICTS ARISE, CONTRACTOR SHALL SUBMIT A FIELD-ADJUSTED DUCTBANK ROUTING PLAN TO THE ENGINEER OF RECORD FOR REVIEW PRIOR TO COMMENCEMENT OF ANY EXCAVATION OR TRENCHING ACTIVITIES. LADWP REQUIRES MINIMUM OF 6" VERTICAL CLEARANCE AND MINIMUM 12" HORIZONTAL CLEARANCE FROM HIGH-VOLTAGE UNDERGROUND LADWP LINES. CONTRACTOR SHALL STAKE THE DUCTBANK WITH LARAP(LOS ANGELES RECREATION AND PARKS) FOR APPROVAL TO COMMENCE.

ProjectLine
Technical Services, Inc

carollo

ENGINEERING
CITY OF LOS ANGELES
Environmental Engineering Division

COUNTY OF LOS ANGELES REGISTERED PROFESSIONAL ENGINEER ROBERT M. SEMLOW 94417 CIVIL STATE OF CALIFORNIA

• THIS PLAN WAS ELECTRONICALLY SIGNED AND STAMPED •

BUREAU OF ENGINEERING

VERTICAL CONTROL:
HORIZONTAL CONTROL:

SHEET TITLE: PLAN & PROFILE - ELECTRICAL DUCTBANK
PROJECT: MACARTHUR LAKE STORMWATER CAPTURE PROJECT
ADDRESS: MACARTHUR PARK 2230 6TH ST LOS ANGELES CA 90057

DEPARTMENT OF PUBLIC WORKS

NO	REVISIONS	DATE	BY

CIP NO. 1920R004

INDEX NO. D-XXXXX

CITY OF LOS ANGELES

DESIGN GROUP		DATE
ENGINEER:	ROBERT GETTER	01/22/2026
ARCHITECT:		
DESIGNED BY:	HENRY LUONG	01/22/2026
DRAWN BY:	CHARLEY KHUU / PAVEL PETIN	01/22/2026
CHECKED BY:	ROBERT GETTER	01/22/2026
APPROVED BY:	ROBERT MORRONI	01/22/2026
	ROBERT GETTER	01/22/2026

WORK ORDER
S33WMLRP, S043MSWC, S343MSWC

SHEET NAME
ES008

SHEET 78 OF 108 SHEETS

REVISION DATES (DESIGN STAGE ONLY)

THE CITY OF LOS ANGELES OR ITS OFFICERS OR AGENTS SHALL NOT BE RESPONSIBLE FOR THE ACCURACY OR COMPLETENESS OF ELECTRONIC COPIES OF THIS PLAN SHEET.

FINAL DESIGN SUBMITTAL

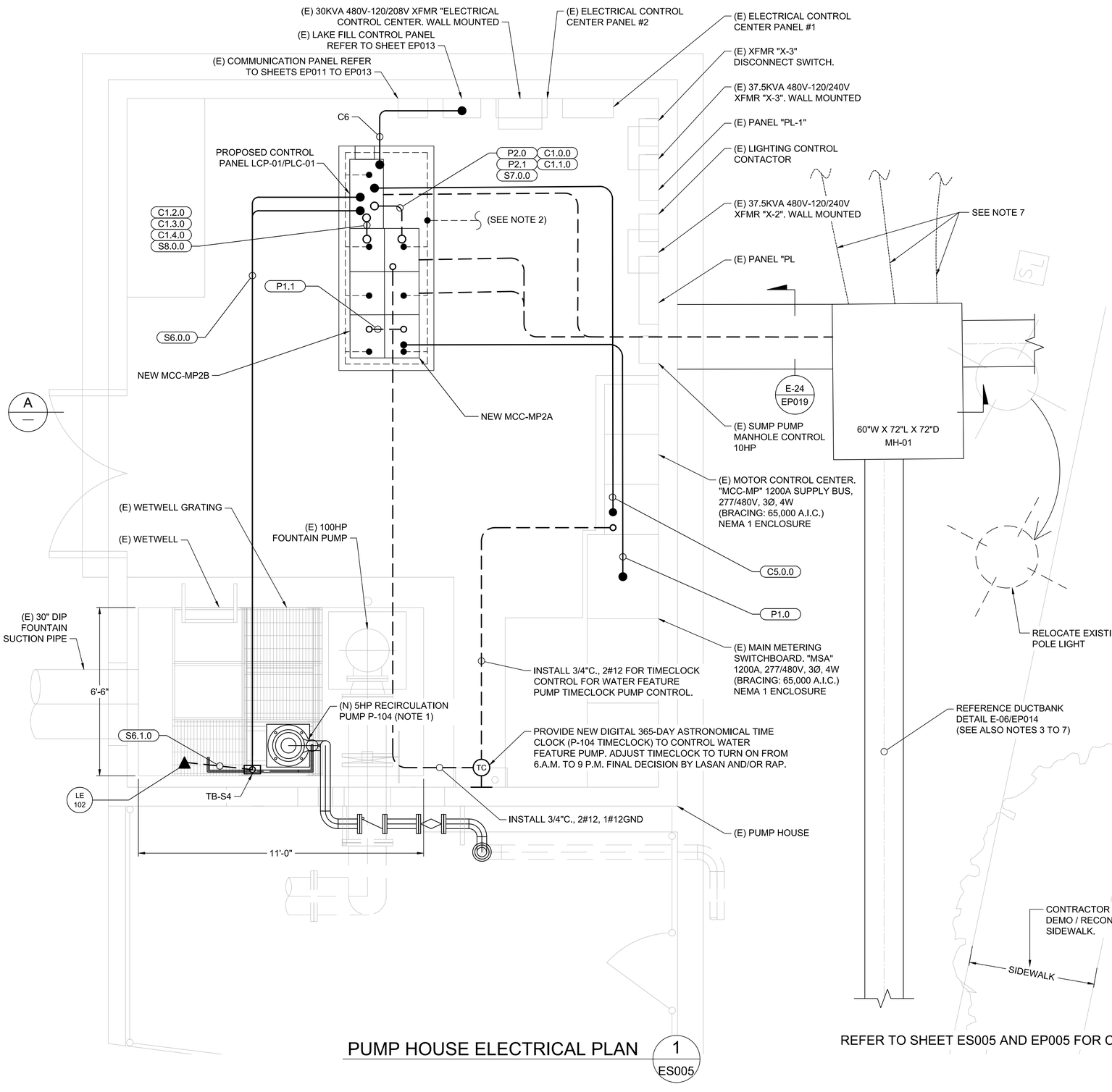

PUMP HOUSE ELECTRICAL PLAN 1

ES005

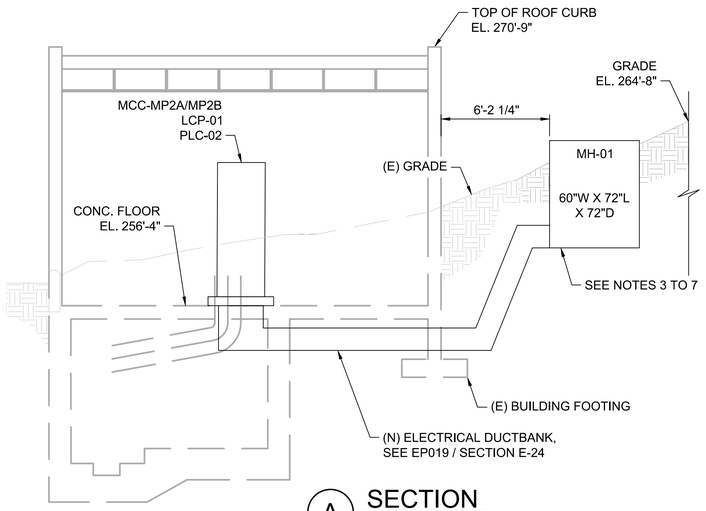

A SECTION

SCALE: N.T.S.

NOTES:

1. CONTRACTOR TO RE-USE EXISTING CABLE AND CONDUIT FOR POWER AND CONTROL WIRING TO REPLACEMENT PUMP.
2. CONTRACTOR SHALL VERIFY EXISTING GROUNDING ELECTRODE AND TIE NEW EQUIPMENT TO EXISTING GROUNDING ELECTRODE SYSTEM.
3. CONTRACTOR SHALL PREPARE AND SUBMIT FIELD SURVEY OF EXISTING UTILITY LOCATIONS, INCLUDING GPR RESULTS, PRIOR TO STAKING AND EXCAVATION.
4. CONTRACTOR SHALL PROVIDE UP TO 10 POTHOLES TO IDENTIFY AND LOCATE EXISTING UTILITIES WITHIN AND NEAR PROPOSED EXCAVATIONS FOR ELECTRICAL WORK.
5. CONTRACTOR SHALL PREPARE AND SUBMIT AN EXCAVATION PLAN FOR ELECTRICAL WORK (I.E. HANDHOLES AND DUCTBANKS) FOR CITY REVIEW AND APPROVAL PRIOR TO EXCAVATION. EXCAVATION PLAN SHALL INCORPORATE POTHOLING RESULTS AND ADDRESS THE NEED FOR SHORING THAT MAY BE REQUIRED TO PREVENT IMPACTING EXISTING BURIED UTILITIES, SIDEWALKS, STRUCTURES, LIGHT POLES, ETC. NEAR PROPOSED EXCAVATIONS.
6. EXCAVATE A MINIMUM OF 72"W X 96"L X 72"D FOR MH-01. PROVIDE SHORING AS REQUIRED.
7. CONTRACTOR'S BID SHALL INCLUDE THE COST FOR SHORING IF REQUIRED.
8. SEE EP002 FOR CONDUIT CALLOUTS.
9. EXISTING POLE LIGHT TO BE RELOCATED EXTEND EXISTING CONDUIT AND CABLE.
10. CONTRACTOR SHALL POTHOLE TO DETERMINE LOCATION OF EXISTING FOOTING PRIOR TO CONSTRUCTION, AND SUBMIT PROPOSED DUCTBANK ALIGNMENT BASED ON POTHOLE RESULTS. POTHOLING WILL REQUIRE EITHER CUTTING FLOOR OR POTHOLING OUTSIDE PUMPHOUSE. IF CONFLICTS ARE IDENTIFIED, CONTRACTOR SHALL PROPOSE APPROACH TO RESOLVING CONFLICTS PRIOR TO CONSTRUCTION.
11. CONTRACTOR SHALL DIG A TEST PIT IN PROPOSED MH-01 LOCATION TO IDENTIFY IF THERE ARE ANY CONFLICTS PRIOR TO CONSTRUCTION. CONTRACTOR SHALL PROPOSE RESOLUTION OF ANY IDENTIFIED CONFLICTS PRIOR TO CONSTRUCTION AND SUBMIT TO CITY FOR APPROVAL.

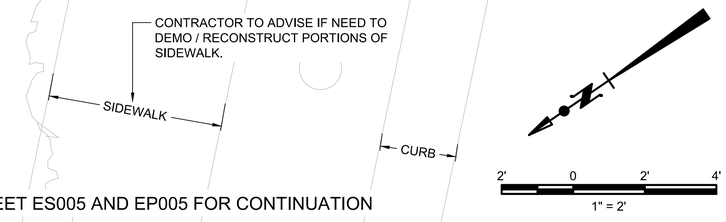

REFER TO SHEET ES005 AND EP005 FOR CONTINUATION

ProjectLine
Technical Services, Inc

carollo

ENGINEERING
CITY OF LOS ANGELES
Environmental Engineering Division

THIS PLAN WAS ELECTRONICALLY SIGNED AND STAMPED

REGISTERED PROFESSIONAL ENGINEER JEFFREY D. GETTER No. E 21884 Exp. 06-30-27 ELECTRICAL

BUREAU OF ENGINEERING

VERTICAL CONTROL:
HORIZONTAL CONTROL:
SHEET TITLE: PUMP HOUSE POWER & INSTRUMENTATION PLAN 1
PROJECT: MACARTHUR LAKE STORMWATER CAPTURE PROJECT
ADDRESS: MACARTHUR PARK 2230 6TH ST LOS ANGELES CA 90057

DEPARTMENT OF PUBLIC WORKS

NO.	REVISIONS	DATE	BY

CIP NO. 1920R004

INDEX NO. D-XXXXX

CITY OF LOS ANGELES

	DESIGN GROUP	DATE
ENGINEER:	ROBERT GETTER	01/22/2026
ARCHITECT:		
DESIGNED BY:	HENRY LUONG	01/22/2026
DRAWN BY:	CHARLEY KHUU / PAVEL PETIN	01/22/2026
CHECKED BY:	ROBERT GETTER	01/22/2026
APPROVED BY:	ROBERT GETTER	01/22/2026

WORK ORDER
S33WMLRP, S043MSWC, S343MSWC

SHEET NAME
EP001

SHEET 79 OF 108 SHEETS

THE CITY OF LOS ANGELES OR ITS OFFICERS OR AGENTS SHALL NOT BE RESPONSIBLE FOR THE ACCURACY OR COMPLETENESS OF ELECTRONIC COPIES OF THIS PLAN SHEET.

REVISION DATES (DESIGN STAGE ONLY)

SHEET VERSION 4.0.1 FILE PATH: C:\PW_WORKING\CAROLLO_200000\D0225944\203818EP001.DWG PLOT DATE: 1/15/2026 4:30 PM SAVED: 1/15/2026 3:48 PM SAVED BY:CHARLEY

FINAL DESIGN SUBMITTAL

NEW 16" ACTUATED VALVE IN EXISTING VALVE VAULT VALVE VAULT (VV2)

MOV-010

TB-PC4

P10.2 C2.3.1

P10.1 C2.3.0

P9.2 C2.2.1

LCP-01/LCP-02

MCC-MP2B

MCC-MP2A

24" ACTUATED VALVE (VV3)

P9.1 C2.2.0

MOV-330

TB-PC3

TB-PC5

P11.2 S2.4.1

12" ACTUATED VALVE (VV4)

MOV-303

C2.4.0 P11.1

S2.1.1

12" FLOW METER (MV2)

S2.1.0

FE 303

E-24 EP019

E-27 EP019

E-25 EP019

E-26 EP019

MH-01 60"W X 72"L X 60"D

TB-CS2.1

BLOWOFF VAULT ASSEMBLY (BV1)

HH-02 17"W X 24"L X 36"D

REFER TO SHEET EP005 FOR CONTINUATION

REFER TO SHEET EP003 FOR CONTINUATION

GENERAL NOTE:

1. CONTRACTOR TO REFER TO CIVIL SHEETS FOR ALL EXISTING AND NEW BURIED UTILITIES.

1' 0 1' 5'
1"=5'

LEGEND

- CONCRETE ENCASED DUCTBANK
- BURIED CONDUIT
- TREE PROTECTION ZONE, SEE SHEET LS100

PUMP HOUSE AND DUCTBANK CONTINUATION PLAN

2
ES005

ProjectLine
Technical Services, Inc

carollo

ENGINEERING
CITY OF LOS ANGELES
Environmental Engineering Division

REGISTERED PROFESSIONAL ENGINEER ROBERT D. GETTER No. E 21884 Exp. 06-30-27 CIVIL

THIS PLAN WAS ELECTRONICALLY SIGNED AND STAMPED

BUREAU OF ENGINEERING

VERTICAL CONTROL:
HORIZONTAL CONTROL:

SHEET TITLE: PUMP HOUSE POWER & INSTRUMENTATION PLAN 2

PROJECT: MACARTHUR LAKE STORMWATER CAPTURE PROJECT

ADDRESS: MACARTHUR PARK 2230 6TH ST LOS ANGELES CA 90057

DEPARTMENT OF PUBLIC WORKS

NO	REVISIONS	DATE	BY

CIP NO. 1920R004

INDEX NO. D-XXXXX

CITY OF LOS ANGELES

	DESIGN GROUP	DATE
ENGINEER:	ROBERT GETTER	01/22/2026
ARCHITECT:		01/22/2026
DESIGNED BY:	HENRY LUONG	01/22/2026
DRAWN BY:	CHARLEY KHIU / PAVEL PETIN	01/22/2026
CHECKED BY:	ROBERT GETTER	ROBERT MORRONI 01/22/2026
APPROVED BY:	ROBERT GETTER	01/22/2026

WORK ORDER
S33WMLRP, S043MSWC, S343MSWC

SHEET NAME
EP002

SHEET 80 OF 108 SHEETS

THE CITY OF LOS ANGELES OR ITS OFFICERS OR AGENTS SHALL NOT BE RESPONSIBLE FOR THE ACCURACY OR COMPLETENESS OF ELECTRONIC COPIES OF THIS PLAN SHEET.

REVISION DATES (DESIGN STAGE ONLY)

THE CITY OF LOS ANGELES OR ITS OFFICERS OR AGENTS SHALL NOT BE RESPONSIBLE FOR THE ACCURACY OR COMPLETENESS OF ELECTRONIC COPIES OF THIS PLAN SHEET.

REVISION DATES (DESIGN STAGE ONLY)

REFER TO SHEET EP002 FOR CONTINUATION

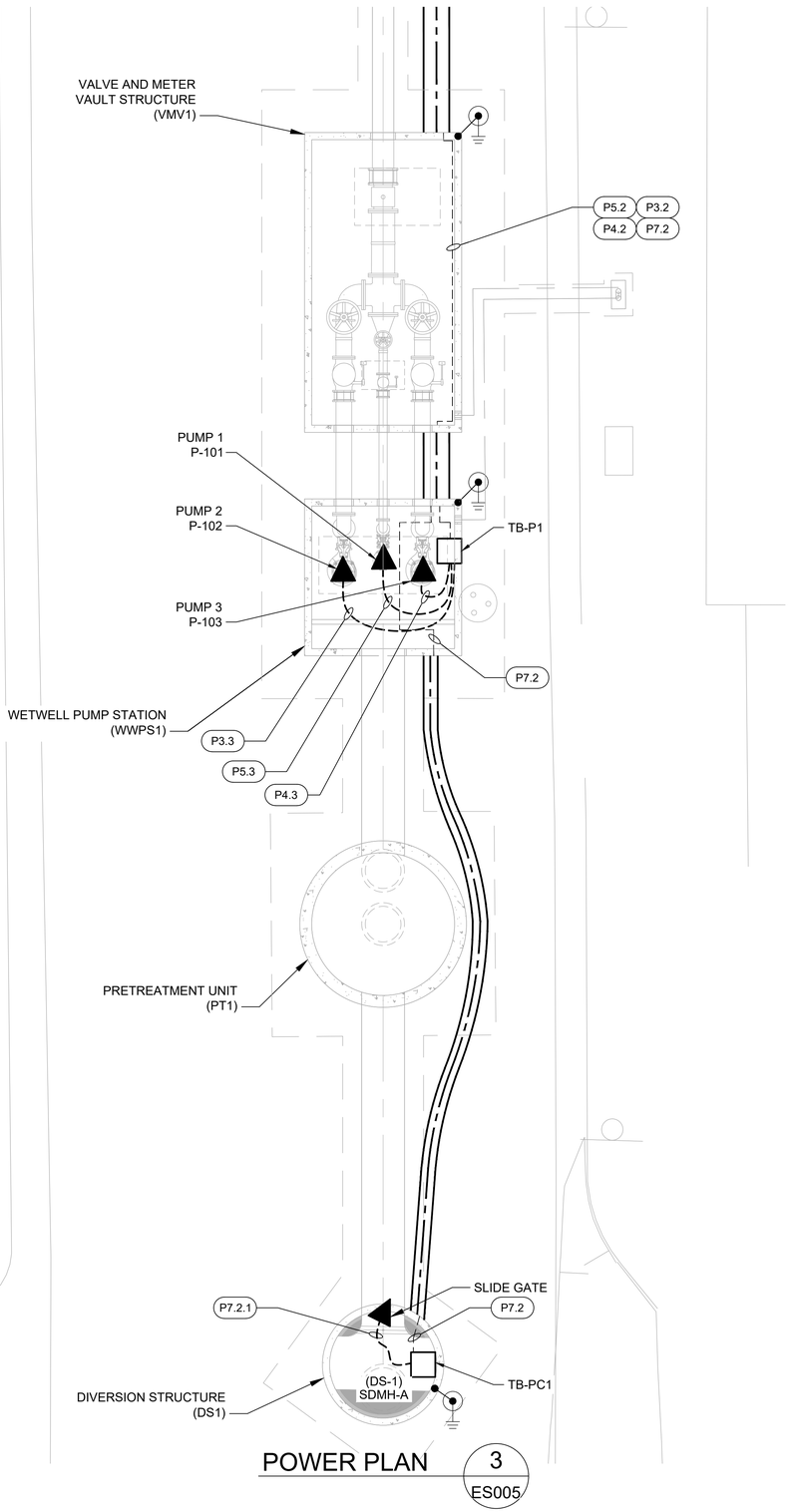

POWER PLAN 3 ES005

REFER TO SHEET EP002 FOR CONTINUATION

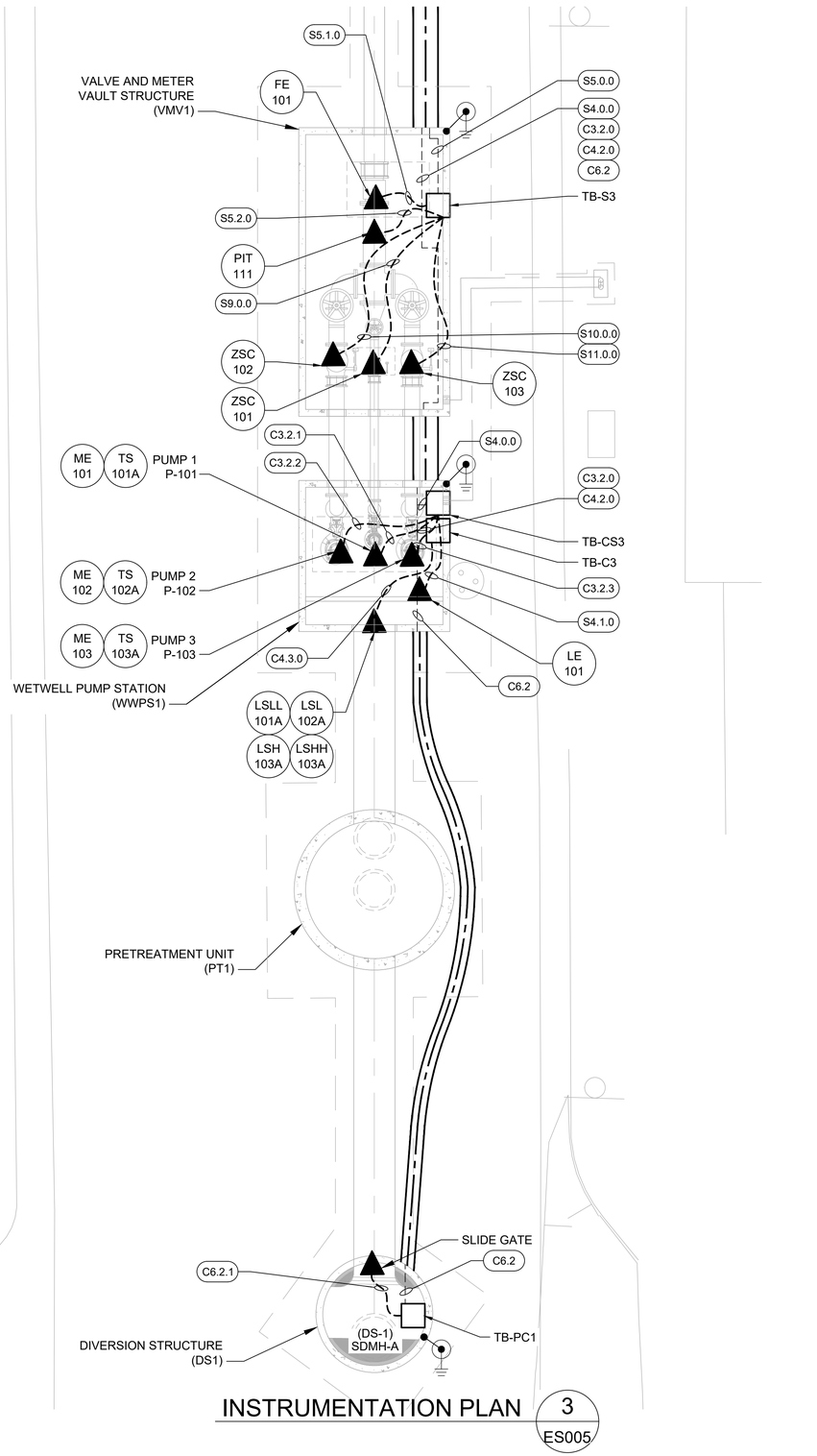

INSTRUMENTATION PLAN 3 ES005

GENERAL NOTES:

1. CONTRACTOR TO REFER TO CIVIL SHEETS FOR ALL EXISTING AND NEW BURIED UTILITIES.
2. CONTRACTOR SHALL PROVIDE ONE SIGN MOUNTED ON UNDERSIDE OF EACH ACCESS HATCH FOR VALVE AND METER VAULT, AND FOR WETWELL PUMP STATION. SIGNS SHALL BE MOUNTED SUCH THAT THEY ARE READABLE WHEN HATCHES ARE OPENED. SIGNS SHALL BE UNFRAMED, MADE FROM PHENOLIC MATERIAL, WITH MINIMUM 4 MM THICKNESS. SIGNS SHALL BE AFFIXED TO ACCESS HATCHES WITH TYPE 316 STAINLESS STEEL MOUNTING HARDWARE. SIGN SHALL INCLUDE MINIMUM 1.5-INCH TALL BLOCK LETTER TEXT (YELLOW ON BLACK BACKGROUND): "STORM WATER DIVERSION PUMP STATION IS POWERED FROM MACARTHUR PARK PUMP HOUSE MCC. LOCK-OUT AND TAG-OUT BREAKER AT MCC AS REQUIRED BY NEC 110.25 BEFORE PERFORMING ELECTRICAL MAINTENANCE."

LEGEND

- CONCRETE ENCASED DUCTBANK
- BURIED CONDUIT
- TREE PROTECTION ZONE, SEE SHEET LS100

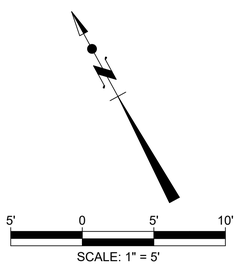

SCALE: 1" = 5'

ProjectLine
Technical Services, Inc

carollo

ENGINEERING
CITY OF LOS ANGELES
Environmental Engineering Design

THIS PLAN WAS ELECTRONICALLY SIGNED AND STAMPED

PROFESSIONAL ENGINEER ★ REGISTERED ★ ROBERT D. GETTER ★ No. E 21884 ★ Exp. 06-30-27 ★ CIVIL ★ CALIFORNIA

BUREAU OF ENGINEERING

VERTICAL CONTROL:
HORIZONTAL CONTROL:

SHEET TITLE: LAKE STREET DIVERSION STRUCTURE POWER AND INSTRUMENTATION PLAN

PROJECT: MACARTHUR LAKE STORMWATER CAPTURE PROJECT

ADDRESS: MACARTHUR PARK 2230 6TH ST LOS ANGELES CA 90057

DEPARTMENT OF PUBLIC WORKS

NO	REVISIONS	DATE	BY

CIP NO. 1920R004

INDEX NO. D-XXXXX

CITY OF LOS ANGELES

DESIGN GROUP		DATE
ENGINEER:	ROBERT GETTER	01/22/2026
ARCHITECT:		
DESIGNED BY:	HENRY LUONG	01/22/2026
DRAWN BY:	CHARLEY KHUU / PAVEL PETIN	01/22/2026
CHECKED BY:	ROBERT GETTER	01/22/2026
APPROVED BY:	ROBERT GETTER	01/22/2026

WORK ORDER S33WMLRP, S043MSWC, S343MSWC

SHEET NAME EP003

SHEET 81 OF 108 SHEETS

FINAL DESIGN SUBMITTAL

THE CITY OF LOS ANGELES OR ITS OFFICERS OR AGENTS SHALL NOT BE RESPONSIBLE FOR THE ACCURACY OR COMPLETENESS OF ELECTRONIC COPIES OF THIS PLAN SHEET.

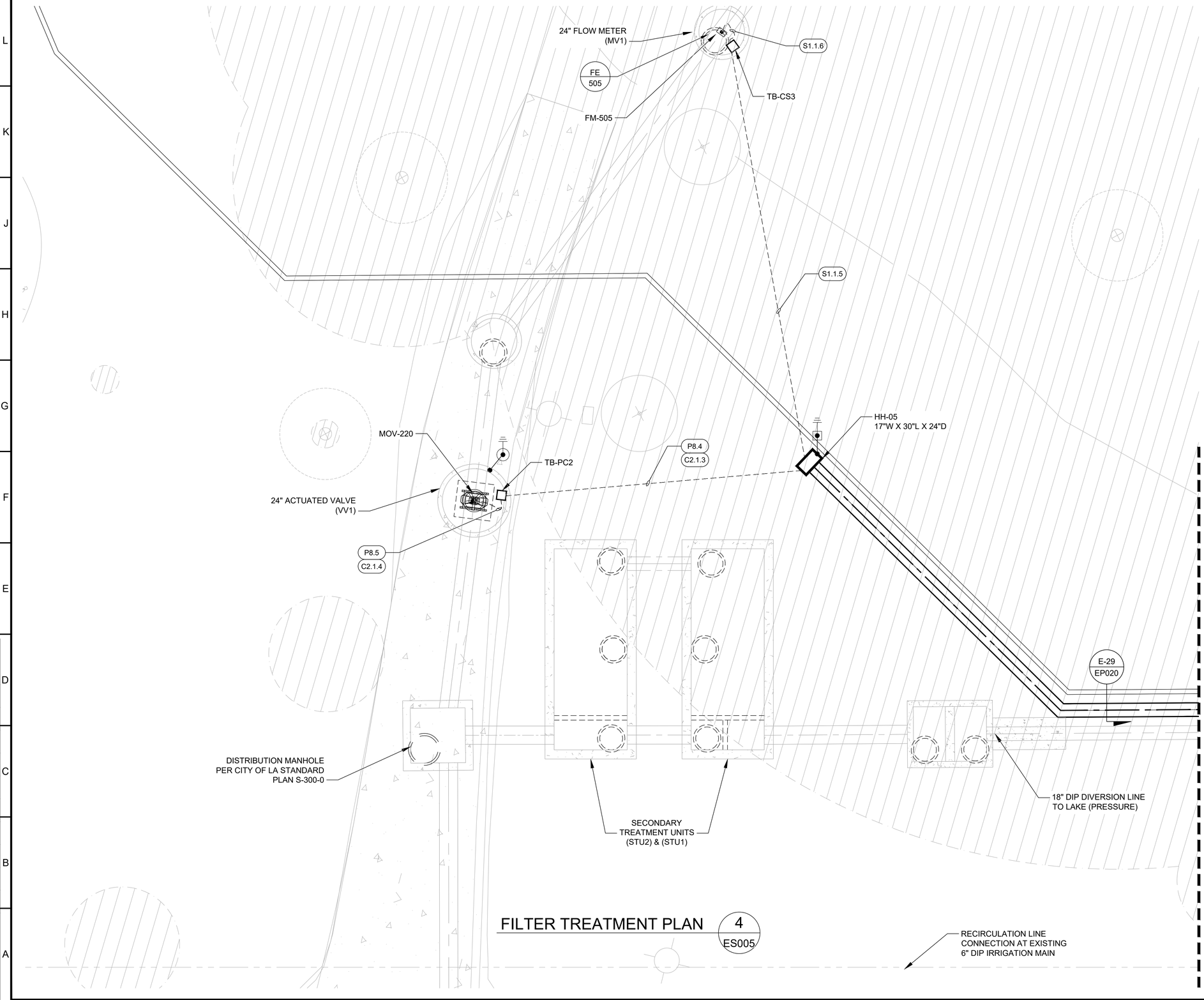

GENERAL NOTES:

1. TREE PROTECTION ZONES ARE IDENTIFIED HEREIN ON THE PLANS WITH CIRCLES AROUND EXISTING TREES. CONTRACTOR SHALL AVOID CONSTRUCTION WITHIN TREE PROTECTION ZONES AS MUCH AS PRACTICAL, AND ASSIST THE CITY IN PROTECTING EXISTING TREES. CONDUIT ROUTING SHOWN HEREIN IS DIAGRAMMATIC, AND CONTRACTOR SHALL PREPARE DETAILED CONDUIT AND EQUIPMENT LOCATION PLANS FOR CITY REVIEW, INCLUDING PROPOSED CONDUIT ROUTING THAT PROTECTS TREES. WHERE REQUIRED TO ROUTE CONDUITS OUTSIDE TREE PROTECTION ZONES, CONTRACTOR SHALL PROVIDE UP TO 10 ADDED BURIED ELECTRICAL PULLBOXES, IN ADDITION TO THOSE SHOWN ON THE PLANS HEREIN, AT NO ADDED COST TO THE CITY.

2. BURIED ELECTRICAL PULLBOXES AND HANDHOLES SHALL BE PRECAST CONCRETE WITH CAST IRON OR CORROSION RESISTANT STEEL LIDS ON METAL FRAMES, SUCH THAT THEY CAN BE WELDED SHUT AND COMPLY WITH NEC 314.30, AND BE UL LISTED. LID SHALL BE MARKED AS "POWER" OR "SIGNAL" AS APPROPRIATE AND TOP OF LID TO BE FLUSH WITH FINISHED GRADE. PROVIDE ALL PULLBOXES AND HANDHOLES MINIMUM SIZES AT 17" X 24" X 36" DEEP. PROVIDE LIDS WITH H20 TRAFFIC RATING. PULLBOXES AND HANDHOLES SHALL BE BY CHRISTY, OLDCASTLE, AND JENSEN OR EQUAL.

LEGEND

- CONCRETE ENCASED DUCTBANK
- BURIED CONDUIT
- TREE PROTECTION ZONE, SEE SHEET LS100

5' 0 5' 10'
SCALE: 1" = 5'

FILTER TREATMENT PLAN 4 ES005

ENGINEERING
CITY OF LOS ANGELES
Environmental Engineering Design

THIS PLAN WAS ELECTRONICALLY SIGNED AND STAMPED

PROFESSIONAL ENGINEER ★ REGISTERED ★ ROBERT D. GETTER No. E 21884 Exp. 06-30-27 ★ CIVIL ★ STATE OF CALIFORNIA

BUREAU OF ENGINEERING
VERTICAL CONTROL:
HORIZONTAL CONTROL:
SHEET TITLE: FILTER TREATMENT STRUCTURE
PROJECT: MACARTHUR LAKE STORMWATER CAPTURE PROJECT
ADDRESS: MACARTHUR PARK 2230 6TH ST LOS ANGELES CA 90057

DEPARTMENT OF PUBLIC WORKS
CITY OF LOS ANGELES

NO.	REVISIONS	DATE	BY

CIP NO. 1920R004
INDEX NO. D-XXXXX

	DESIGN GROUP	DATE
ENGINEER:	ROBERT GETTER	01/22/2026
ARCHITECT:		01/22/2026
DESIGNED BY:	HENRY LUONG	01/22/2026
DRAWN BY:	CHARLEY KHUU / PAVEL PETIN	01/22/2026
CHECKED BY:	ROBERT GETTER ROBERT MORRONI	01/22/2026
APPROVED BY:	ROBERT GETTER	01/22/2026

ProjectLine
Technical Services, Inc

carollo

WORK ORDER
S33WMLRP, S043MSWC, S343MSWC

SHEET NAME
EP004
SHEET 82 OF 108 SHEETS

REVISION DATES (DESIGN STAGE ONLY)

THE CITY OF LOS ANGELES OR ITS OFFICERS OR AGENTS SHALL NOT BE RESPONSIBLE FOR THE ACCURACY OR COMPLETENESS OF ELECTRONIC COPIES OF THIS PLAN SHEET.

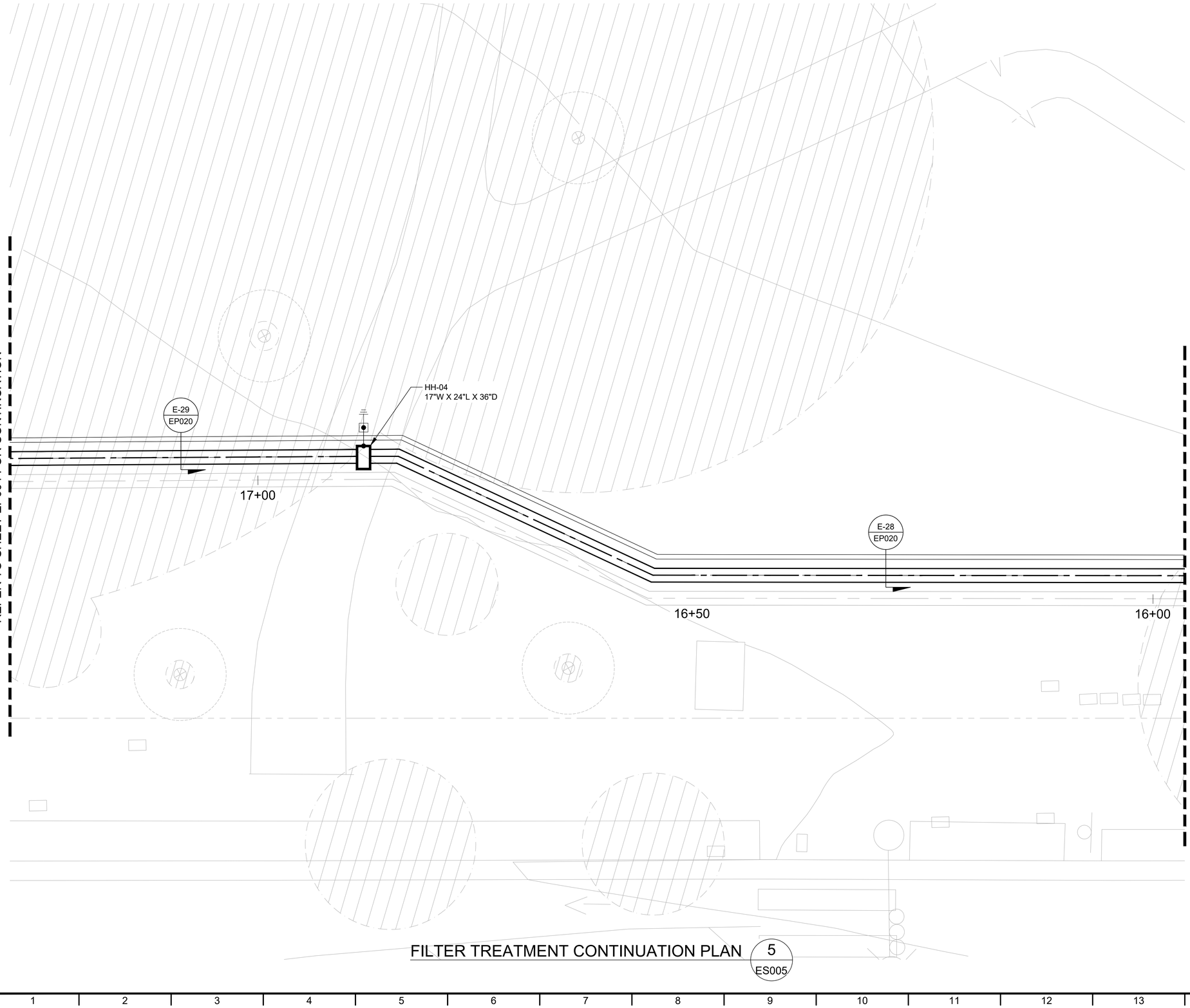

GENERAL NOTES:

1. TREE PROTECTION ZONES ARE IDENTIFIED HEREIN ON THE PLANS WITH CIRCLES AROUND EXISTING TREES. CONTRACTOR SHALL AVOID CONSTRUCTION WITHIN TREE PROTECTION ZONES AS MUCH AS PRACTICAL, AND ASSIST THE CITY IN PROTECTING EXISTING TREES. CONDUIT ROUTING SHOWN HEREIN IS DIAGRAMMATIC, AND CONTRACTOR SHALL PREPARE DETAILED CONDUIT AND EQUIPMENT LOCATION PLANS FOR CITY REVIEW, INCLUDING PROPOSED CONDUIT ROUTING THAT PROTECTS TREES. WHERE REQUIRED TO ROUTE CONDUITS OUTSIDE TREE PROTECTION ZONES, CONTRACTOR SHALL PROVIDE UP TO 10 ADDED BURIED ELECTRICAL PULLBOXES, IN ADDITION TO THOSE SHOWN ON THE PLANS HEREIN, AT NO ADDED COST TO THE CITY.
2. BURIED ELECTRICAL PULLBOXES AND HANDHOLES SHALL BE PRECAST CONCRETE WITH CAST IRON OR CORROSION RESISTANT STEEL LIDS ON METAL FRAMES, SUCH THAT THEY CAN BE WELDED SHUT AND COMPLY WITH NEC 314.30, AND BE UL LISTED. LID SHALL BE MARKED AS "POWER" OR "SIGNAL" AS APPROPRIATE AND TOP OF LID TO BE FLUSH WITH FINISHED GRADE. PROVIDE ALL PULLBOXES AND HANDHOLES MINIMUM SIZES AT 17" x24"x36" DEEP. PROVIDE LIDS WITH H20 TRAFFIC RATING. PULLBOXES AND HANDHOLES SHALL BE BY CHRISTY, OLDCASTLE, AND JENSEN OR EQUAL.

LEGEND

- CONCRETE ENCASED DUCTBANK
- BURIED CONDUIT
- TREE PROTECTION ZONE, SEE SHEET LS100

5' 0 5' 10'
SCALE: 1" = 5'

FILTER TREATMENT CONTINUATION PLAN 5 ES005

ProjectLine
Technical Services, Inc

carollo

ENGINEERING
CITY OF LOS ANGELES
Environmental Engineering Division

THIS PLAN WAS ELECTRONICALLY SIGNED AND STAMPED

PROFESSIONAL ENGINEER ★ REGISTERED ★ CIVIL ★ CALIFORNIA
ROBERT D. GETTER
No. C 31984
Exp. 06-30-27

BUREAU OF ENGINEERING
VERTICAL CONTROL:
HORIZONTAL CONTROL:
SHEET TITLE: FILTER TREATMENT CONTINUATION
PROJECT: MACARTHUR LAKE STORMWATER CAPTURE PROJECT
ADDRESS: MACARTHUR PARK 2230 6TH ST LOS ANGELES CA 90057

DEPARTMENT OF PUBLIC WORKS
NO | REVISIONS | DATE | BY

CIP NO. 1920R004

INDEX NO. D-XXXXX

CITY OF LOS ANGELES

	DESIGN GROUP	DATE
ENGINEER:	ROBERT GETTER	01/22/2026
ARCHITECT:		01/22/2026
DESIGNED BY:	HENRY LUONG	01/22/2026
DRAWN BY:	CHARLEY KHIU / PAVEL PETIN	01/22/2026
CHECKED BY:	ROBERT GETTER / ROBERT MORRONI	01/22/2026
APPROVED BY:	ROBERT GETTER	01/22/2026

WORK ORDER
S33WMLRP, S043MSWC, S343MSWC

SHEET NAME
EP005
SHEET 83 OF 108 SHEETS

REVISION DATES (DESIGN STAGE ONLY)

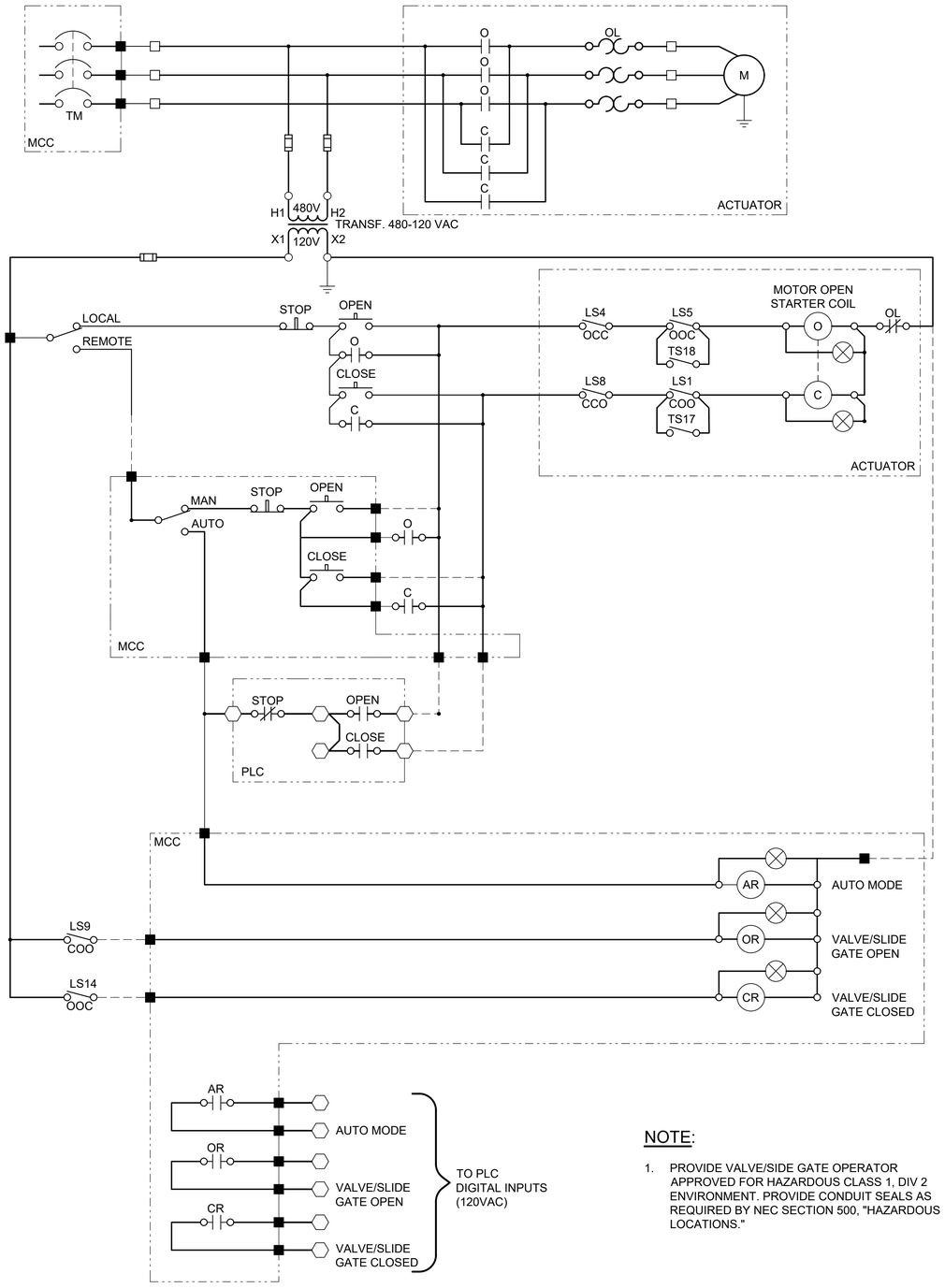

NOTE:

1. PROVIDE VALVE/SIDE GATE OPERATOR APPROVED FOR HAZARDOUS CLASS 1, DIV 2 ENVIRONMENT. PROVIDE CONDUIT SEALS AS REQUIRED BY NEC SECTION 500, "HAZARDOUS LOCATIONS."

TYPICAL MOTOR ACTUATED PLUG VALVE/SLIDE GATE CONTROL SCHEMATIC
(MOV-010, MOV-220, MOV-303, MOV-330, SLG-1)

MOTOR ACTUATED PLUG VALVE/SLIDE GATE LIMIT SWITCH CONTACT DEVELOPMENT				
CONTACT	VALVE FULLY OPEN	VALVE INTERMEDIATE POSITION	VALVE FULLY CLOSED	CONTACT FUNCTION
1	CLOSED	OPEN	OPEN	BYPASS CTRL
2	CLOSED	OPEN	OPEN	INDICATION
3	OPEN	CLOSED	CLOSED	INDICATION
4	OPEN	CLOSED	CLOSED	OPEN LIMIT
5	OPEN	OPEN	CLOSED	BYPASS CIR
6	OPEN	OPEN	CLOSED	INDICATION
7	CLOSED	CLOSED	OPEN	SPARE
8	CLOSED	CLOSED	OPEN	CLOSE LIMIT
9	CLOSED	OPEN	OPEN	INDICATION
10	CLOSED	OPEN	OPEN	SPARE
11	OPEN	CLOSED	CLOSED	SPARE
12	OPEN	CLOSED	CLOSED	SPARE
13	OPEN	OPEN	CLOSED	SPARE
14	OPEN	OPEN	CLOSED	INDICATION
15	CLOSED	CLOSED	OPEN	INDICATION
16	CLOSED	CLOSED	OPEN	SPARE
17	CLOSING THRUST SWITCH INTERRUPTS CONTROL CIRCUIT IF MECHANICAL OVERLOAD OCCURS DURING CLOSING CYCLE.			
18	OPENING THRUST SWITCH INTERRUPTS CONTROL CIRCUIT IF MECHANICAL OVERLOAD OCCURS DURING OPENING CYCLE.			

LEGEND

- ☐ TERMINAL BLOCK IN ELECTRIC ACTUATOR
- ■ TERMINAL BLOCK IN MCC
- ⬡ TERMINAL BLOCK IN PLC

MCC	MOTOR CONTROL CENTER
PLC	PROGRAMMABLE LOGIC CONTROLLER
COO	CLOSED WHEN VALVE/SLIDE GATE IS FULLY OPENED
OOC	CLOSED WHEN VALVE/SLIDE GATE IS FULLY CLOSED
CCO	OPEN WHEN VALVE/SLIDE GATE IS FULLY CLOSED
OCC	OPEN WHEN VALVE/SLIDE GATE IS FULLY OPENED
LSX	LIMIT SWITCH IN VALVE/SLIDE GATE SWITCH COMPARTMENT
TSX	TORQUE SWITCH IN VALVE/SLIDE GATE SWITCH COMPARTMENT
X	SWITCH IDENTIFICATION NUMBER IN VALVE/SLIDE GATE SWITCH COMPARTMENT

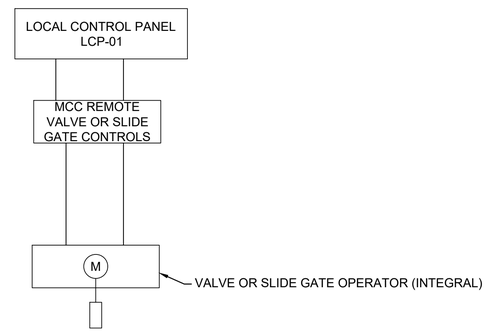

CABLE BLOCK DIAGRAM

ENGINEERING
CITY OF LOS ANGELES
Environmental Engineering Division

THIS PLAN WAS ELECTRONICALLY SIGNED AND STAMPED

REGISTERED PROFESSIONAL ENGINEER ROBERT D. GETTER No. E 21586 Exp. 06-30-27 ELECTRICAL

BUREAU OF ENGINEERING

VERTICAL CONTROL:
HORIZONTAL CONTROL:

SHEET TITLE: MOTOR ACTUATED PLUG VALVE & SLIDE GATE CONTROL SCHEMATIC

PROJECT: MACARTHUR LAKE STORMWATER CAPTURE PROJECT

ADDRESS: MACARTHUR PARK 2230 6TH ST LOS ANGELES CA 90057

DEPARTMENT OF PUBLIC WORKS

NO.	REVISIONS	DATE	BY

INDEX NO. D-XXXXX

CIP NO. 1920R004

CITY OF LOS ANGELES

	DESIGN GROUP	DATE
ENGINEER:	ROBERT GETTER	01/22/2026
ARCHITECT:		
DESIGNED BY:	HENRY LUONG	01/22/2026
DRAWN BY:	CHARLEY KHUU / PAVEL PETIN	01/22/2026
CHECKED BY:	ROBERT GETTER	ROBERT MORRONI 01/22/2026
APPROVED BY:	ROBERT GETTER	01/22/2026

WORK ORDER
S33WMLRP, S043MSWC, S343MSWC

SHEET NAME
EP006

SHEET 84 OF 108 SHEETS

ProjectLine
Technical Services, Inc

carollo

THE CITY OF LOS ANGELES OR ITS OFFICERS OR AGENTS SHALL NOT BE RESPONSIBLE FOR THE ACCURACY OR COMPLETENESS OF ELECTRONIC COPIES OF THIS PLAN SHEET.

REVISION DATES (DESIGN STAGE ONLY)

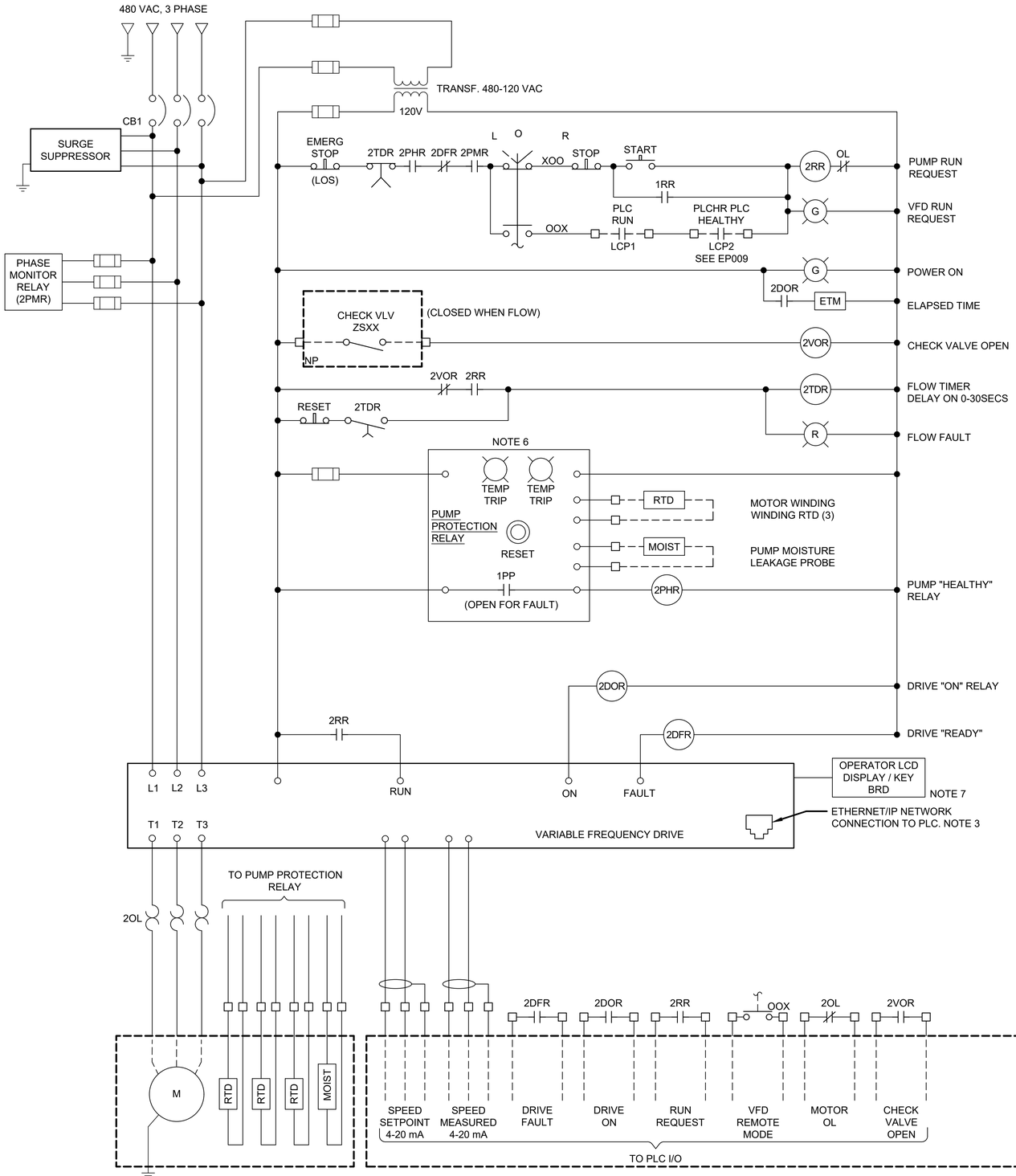

PUMP - 102/103 VFD CONTROL SCHEMATIC

NOTES:

1. SCHEMATIC SHOWN IS DIAGRAMMATIC AND IS INTENDED TO INDICATE THE REQUIRED FUNCTIONALITY OF THE PUMP CONTROL.
2. SEE SECTION 16310 "VARIABLE FREQUENCY DRIVE UNITS" FOR ADDITIONAL VFD REQUIREMENTS.
3. THE FOLLOWING SIGNALS TO BE SENT VIA THE NETWORK TO THE PLC:
   -MOTOR CURRENT
   -MOTOR VOLTAGE
4. SEE SPECIFICATION SECTION 16310 "VARIABLE FREQUENCY DRIVE UNITS" FOR REQUIREMENTS FOR HARMONIC MITIGATION. SEE SECTION 16280 "SHORT CIRCUIT AND COORDINATION" FOR HARMONIC STUDY.
5. PROVIDE PUMP DISCONNECT AND DISCONNECT INTERLOCK WHERE A FAILED DISCONNECT IS SHOWN.
6. PUMP PROTECTION RELAY TO BE PROVIDED BY PUMP MANUFACTURER FOR MOUNTING AND WIRING IN THE VFD CABINET. PROVIDE INPUTS FOR MOTOR WINDING RTDS AND LEAKAGE SENSOR.
7. OPERATOR DISPLAY MOUNTED ON THE FRONT DOOR OF MCC.

ENGINEERING
CITY OF LOS ANGELES
Environmental Engineering Division

THIS PLAN WAS ELECTRONICALLY SIGNED AND STAMPED

REGISTERED PROFESSIONAL ENGINEER ROBERT D. GETTER No. E 21884 Exp. 06-30-27 ELECTRICAL

BUREAU OF ENGINEERING
VERTICAL CONTROL:
HORIZONTAL CONTROL:
SHEET TITLE: PUMP102 103 VFD CONTROL
PROJECT: MACARTHUR LAKE STORMWATER CAPTURE PROJECT
ADDRESS: MACARTHUR PARK 2230 6TH ST LOS ANGELES CA 90057

DEPARTMENT OF PUBLIC WORKS
CITY OF LOS ANGELES

NO.	REVISIONS	DATE	BY

CIP NO. 1920R004
INDEX NO. D-XXXXX

	DESIGN GROUP	DATE
ENGINEER:	ROBERT GETTER	01/22/2026
ARCHITECT:		
DESIGNED BY:	HENRY LUONG	01/22/2026
DRAWN BY:	CHARLEY KHUU / PAVEL PETIN	01/22/2026
CHECKED BY:	ROBERT GETTER	ROBERT MORRONI 01/22/2026
APPROVED BY:	ROBERT GETTER	01/22/2026

ProjectLine Technical Services, Inc

carollo

WORK ORDER S33WMLRP, S043MSWC, S343MSWC

SHEET NAME
EP007
SHEET 85 OF 108 SHEETS

THE CITY OF LOS ANGELES OR ITS OFFICERS OR AGENTS SHALL NOT BE RESPONSIBLE FOR THE ACCURACY OR COMPLETENESS OF ELECTRONIC COPIES OF THIS PLAN SHEET.

REVISION DATES (DESIGN STAGE ONLY)

SHEET VERSION 4.0.1 FILE PATH: C:\PW_WORKING\CAROLLO_200000\D0225944\203818EP007.DWG PLOT DATE: 1/15/2026 3:59 PM SAVED: 1/15/2026 3:48 PM SAVED BY:CHARLEY

FINAL DESIGN SUBMITTAL

480 VAC, 3 PHASE
T1 T2 T3
CB1
120V
EMERG STOP (LOS)
1TDR
1PHR
L O R
XOO
OOX
STOP
START
1RR
OL
PLC RUN
G
PUMP RUN REQUEST
PUMP RUN REQUEST
POWER ON
1DOR
ETM
ELAPSED TIME
CHECK VLV ZSXX
NP
(CLOSED WHEN FLOW)
1VOR
CHECK VALVE OPEN
1VOR 1RR
1TDR
FLOW TIMER (DELAY ON, 0-30 SECS)
RESET 1TDR
R
FLOW FAULT
NOTE 3
PUMP PROTECTION RELAY - XPPR
FROM MOTOR
TSW
MOIST
TEMP TRIP
TEMP TRIP
RESET
PUMP SHUT DOWN
PUMP WARN ALARM
TO PLC
MOTOR WINDING TEMP SWITCHES
PUMP MOISTURE LEAKAGE PROBE
1PP
(OPEN FOR FAULT)
1 PHR
PUMP "HEALTHY" RELAY

OL
T1 T2 T3
M
TO PUMP PROTECTION RELAY
TEMP SW
RTD
MOIST

1DOR
1RR
OOX
OL
1VOR
PUMP ON
RUN REQUEST
REMOTE MODE
MOTOR OL
CHECK VALVE OPEN
TO PLC I/O

PUMP -101 FVNR CONTROL SCHEMATIC

L1
120VAC FROM DISTRIBUTION "MINI-POWER CENTER DP-1"
N
G
UPS & BYPASS
RS232
TO ETHERNET SWITCH IN LCP2 NOTE 1
SERIAL CONV
120VAC SUPPLY
TO LCP-02 W/ GND
NOTE 2

L1
N
G
120VAC FROM UPS
SURGE SUPPRESSOR
1A
CB-1
CABINET DOOR SWITCH
CSW
W
1A
CB-2
CABINET THERMOSTAT
TSW
AC-1
AC-1
5A
CB-3
REC
5A
CB-4
LCD SCREEN
5A
CB-5
MANAGE SWITCH/ FIRE WALL
5A
CB-6
CELLULAR ROUTER
5A
CB-7
POWER SUPPLY 24 VDC 10A
5A
CB-8
POWER SUPPLY 24 VDC 10A
24VDC +
0VDC -
24VDC
FS51
2A
PLC DIGITAL INPUT MODULES AS REQUIRED
FS52
2A
PLC DIGITAL OUTPUT MODULES AS REQUIRED
FS53
2A
PLC ANALOG INPUT MODULES AS REQUIRED
FS54
2A
SPARE
FS55
2A
SPARE
TO CABLE SHIELDS
#14
COPPER GROUND BUS

120VAC FROM DISTRIBUTION "MINI-POWER CENTER DP-1"
AIR CONDITIONER & THERMOSTAT
AC YAHH
TO PLC

POWER DISTRIBUTION - PLC CABINET PLC-01

THE CITY OF LOS ANGELES OR ITS OFFICERS OR AGENTS SHALL NOT BE RESPONSIBLE FOR THE ACCURACY OR COMPLETENESS OF ELECTRONIC COPIES OF THIS PLAN SHEET.

REVISION DATES (DESIGN STAGE ONLY)

ENGINEERING
CITY OF LOS ANGELES
Environmental Engineering Design

THIS PLAN WAS ELECTRONICALLY SIGNED AND STAMPED

REGISTERED PROFESSIONAL ENGINEER ROBERT D. GETTER No. E 21586 Exp. 06-30-27 CIVIL

BUREAU OF ENGINEERING
VERTICAL CONTROL:
HORIZONTAL CONTROL:
SHEET TITLE: ELECTRICAL SCHEMATIC DIAGRAM
LCP-01 & PLC-01
PROJECT: MACARTHUR LAKE STORMWATER CAPTURE PROJECT
ADDRESS: MACARTHUR PARK 2230 6TH ST LOS ANGELES CA 90057

DEPARTMENT OF PUBLIC WORKS
NO. | REVISIONS | DATE | BY
INDEX NO. D-XXXXX
CIP NO. 1920R004

CITY OF LOS ANGELES

	DESIGN GROUP	DATE
ENGINEER:	ROBERT GETTER	01/22/2026
ARCHITECT:		
DESIGNED BY:	HENRY LUONG	01/22/2026
DRAWN BY:	CHARLEY KHUU / PAVEL PETIN	01/22/2026
CHECKED BY:	ROBERT GETTER	01/22/2026
APPROVED BY:	ROBERT GETTER / ROBERT MORRONI	01/22/2026

ProjectLine Technical Services, Inc

carollo

WORK ORDER S33WMLRP, S043MSWC, S343MSWC

SHEET NAME
EP008
SHEET 86 OF 108 SHEETS

FINAL DESIGN SUBMITTAL

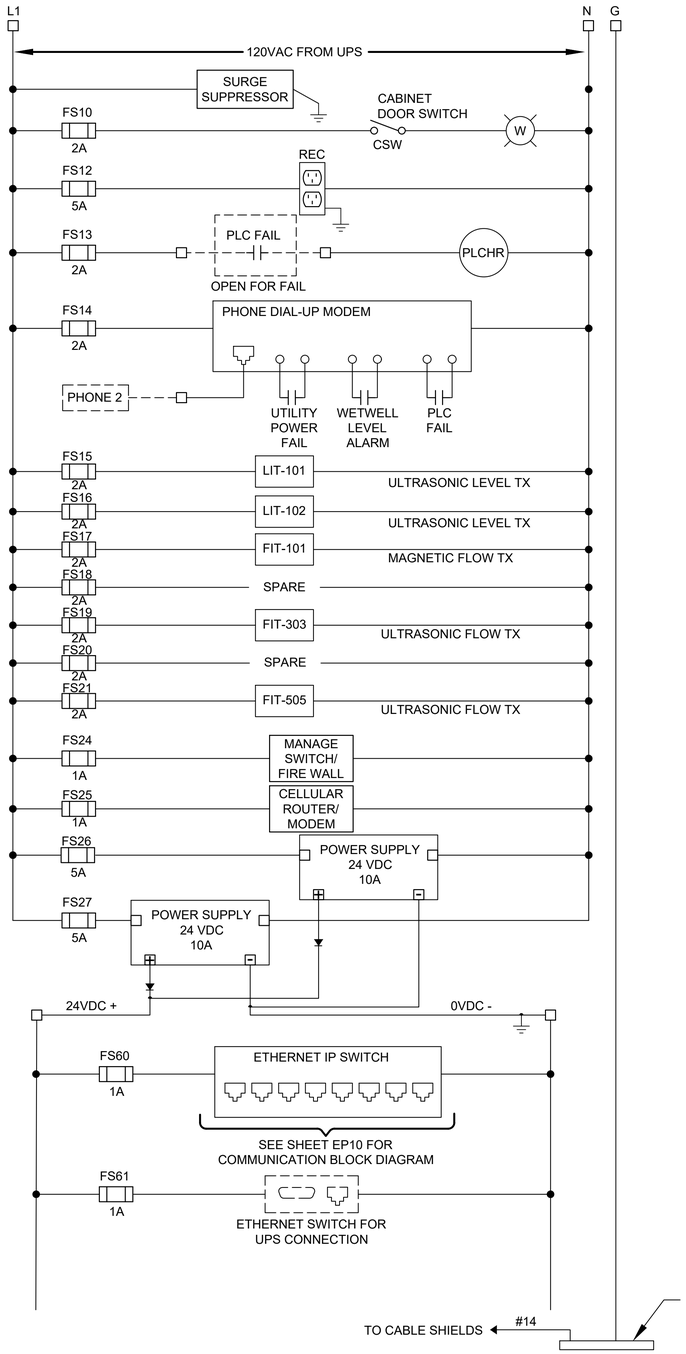

POWER DISTRIBUTION - CONTROL CABINET LCP-01

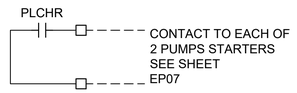

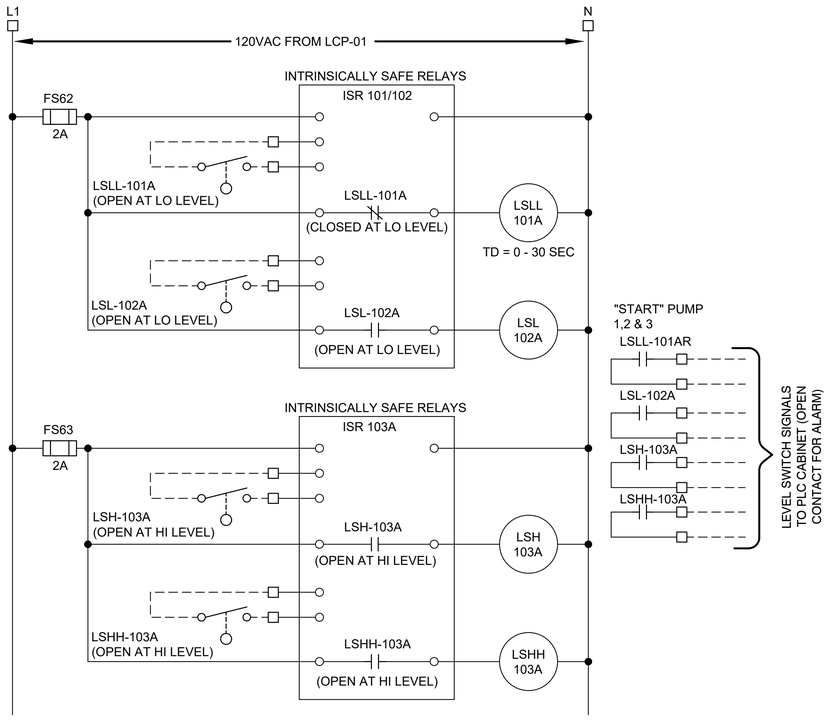

POWER AND CONTROL SCHEMATIC - LCP-01 ◇1

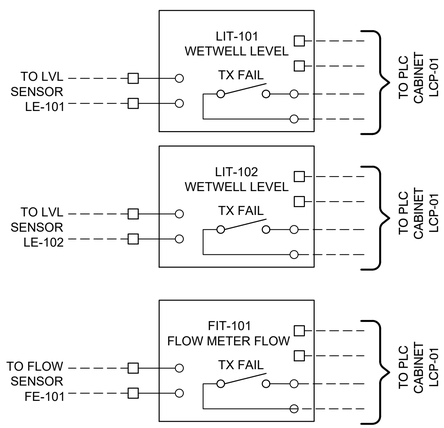

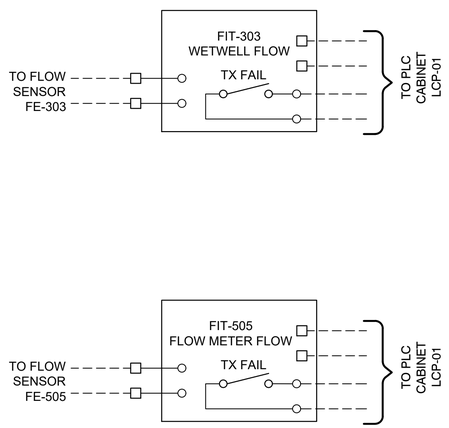

NOTE:

◇1 LCP-01A LOCATED INSIDE OF LCP-01 TO HOUSE INTRINSICALLY SAFE DEVICES AND WIRING.

THE CITY OF LOS ANGELES OR ITS OFFICERS OR AGENTS SHALL NOT BE RESPONSIBLE FOR THE ACCURACY OR COMPLETENESS OF ELECTRONIC COPIES OF THIS PLAN SHEET.

REVISION DATES (DESIGN STAGE ONLY)

ENGINEERING
CITY OF LOS ANGELES
Environmental Engineering Division

THIS PLAN WAS ELECTRONICALLY SIGNED AND STAMPED

REGISTERED PROFESSIONAL ENGINEER ROBERT D. GETTER No. E 21584 Exp. 06-30-27 ELECTRICAL

BUREAU OF ENGINEERING
VERTICAL CONTROL:
HORIZONTAL CONTROL:
SHEET TITLE: ELECTRICAL SCHEMATIC DIAGRAM LCP-01
PROJECT: MACARTHUR LAKE STORMWATER CAPTURE PROJECT
ADDRESS: MACARTHUR PARK 2230 6TH ST LOS ANGELES CA 90057

DEPARTMENT OF PUBLIC WORKS

NO.	REVISIONS	DATE	BY

CIP NO. 1920R004

INDEX NO. D-XXXXX

CITY OF LOS ANGELES

	DESIGN GROUP	DATE
ENGINEER:	ROBERT GETTER	01/22/2026
ARCHITECT:		01/22/2026
DESIGNED BY:	HENRY LUONG	01/22/2026
DRAWN BY:	CHARLEY KHUU / PAVEL PETIN	01/22/2026
CHECKED BY:	ROBERT GETTER ROBERT MORRONI	01/22/2026
APPROVED BY:	ROBERT GETTER	01/22/2026

ProjectLine Technical Services, Inc

carollo

WORK ORDER S33WMLRP, S043MSWC, S343MSWC

SHEET NAME
EP009
SHEET 87 OF 108 SHEETS

SHEET VERSION 4.0.1 FILE PATH: C:\PW_WORKING\CAROLLO_200000\D0225944\203818EP009.DWG PLOT DATE: 1/15/2026 3:59 PM SAVED: 1/15/2026 3:49 PM SAVED BY:CHARLEY

FINAL DESIGN SUBMITTAL

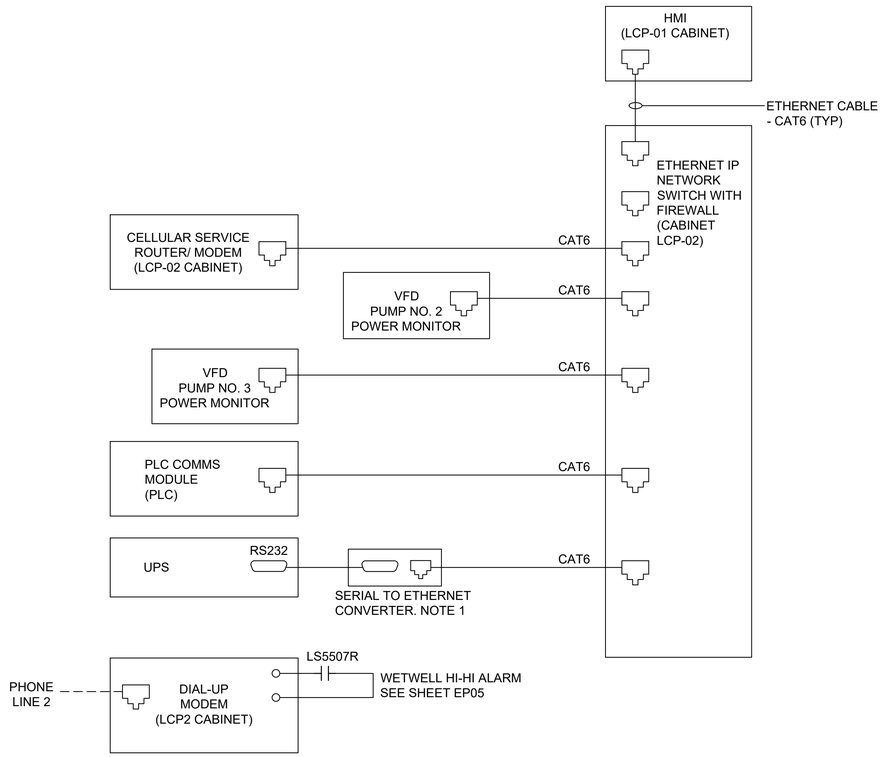

COMMUNICATION BLOCK DIAGRAM (LCP-01)

NOTES:

1. ISOLATED SERIAL TO ETHERNET CONVERTER LOCATED IN LCP-01 CABINET. ADVATECH/ B&B SMARTWORX MODEL VLINX OR EQUAL.
2. LON TO MODBUS/TCP CONVERTER. CUMMINS "POWER COMMAND" GATEWAY A054V134.

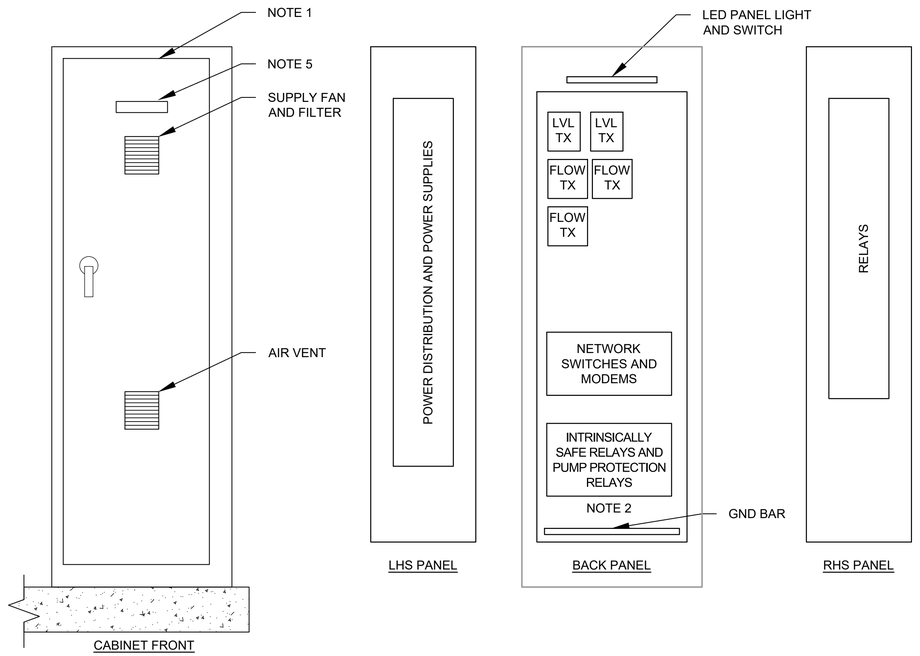

CONTROL CABINET LCP-01 ELEVATIONS

NOTES:

1. CABINET : 72" (H) x 24" (W) x 20" (D) NEMA12.
2. SEGREGATE INTRINSICALLY SAFE WIRING WITHIN CABINET AS REQUIRED BY NEC CODE ARTICLE 504.
3. SEE SHEET EP09 FOR LCP-01 ELECTRICAL SCHEMATIC DIAGRAM.
4. CONTRACTOR TO EXTEND EXISTING EQUIPMENT PAD AS NEEDED TO ACCOMMODATE NEW CABINETS.MATCH HEIGHT OF EXISTING PADS.
5. PROVIDE CABINET AND CABINET POWER SOURCE LABEL "120VAC CONTROL CABINET LCP-01".

ENGINEERING
CITY OF LOS ANGELES

THIS PLAN WAS ELECTRONICALLY SIGNED AND STAMPED

BUREAU OF ENGINEERING
VERTICAL CONTROL:
HORIZONTAL CONTROL:
SHEET TITLE: COMMUNICATION BLOCK DIAGRAM AND LCP-02 CABINET LAYOUT
PROJECT: MACARTHUR LAKE STORMWATER CAPTURE PROJECT
ADDRESS: MACARTHUR PARK 2230 6TH ST LOS ANGELES CA 90057

DEPARTMENT OF PUBLIC WORKS
CITY OF LOS ANGELES

NO	REVISIONS	DATE	BY

CIP NO. 1920R004
INDEX NO. D-XXXXX

	DESIGN GROUP	DATE
ENGINEER:	ROBERT GETTER	01/22/2026
ARCHITECT:		01/22/2026
DESIGNED BY:	HENRY LUONG	01/22/2026
DRAWN BY:	CHARLEY KHUU / PAVEL PETIN	01/22/2026
CHECKED BY:	ROBERT GETTER ROBERT MORRONI	01/22/2026
APPROVED BY:	ROBERT GETTER	01/22/2026

WORK ORDER
S33WMLRP, S043MSWC, S343MSWC

SHEET NAME
EP010
SHEET 88 OF 108 SHEETS

ProjectLine
Technical Services, Inc

carollo

THE CITY OF LOS ANGELES OR ITS OFFICERS OR AGENTS SHALL NOT BE RESPONSIBLE FOR THE ACCURACY OR COMPLETENESS OF ELECTRONIC COPIES OF THIS PLAN SHEET.

REVISION DATES
(DESIGN STAGE ONLY)

FINAL DESIGN SUBMITTAL

THE CITY OF LOS ANGELES OR ITS OFFICERS OR AGENTS SHALL NOT BE RESPONSIBLE FOR THE ACCURACY OR COMPLETENESS OF ELECTRONIC COPIES OF THIS PLAN SHEET.

WIRE GAUGE: AWG #16

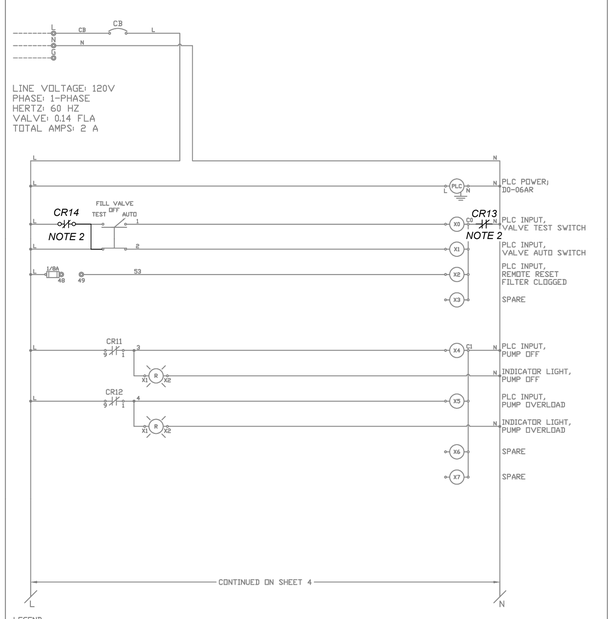

LEGEND

- ◎ - INDICATES TERMINAL BLOCK
- ——— - INDICATES FIELD WIRING
- -||- - ALL N/O CONTACTS SHOWN IN THE DE-ENERGIZED STATE
- -|/|- - ALL N/C CONTACTS SHOWN IN THE DE-ENERGIZED STATE

NOTE: MAIN CIRCUIT PROTECTION AND DISCONNECT SWITCH PROVIDED BY THE INSTALLER.

MULTI W SYSTEMS, INC.
WATER & WASTE WATER EQUIPMENT SUPPLIER
2615 STROZIER AVENUE, EL MONTE, CA 91733 PH: (626) 401-2627 FAX: (626) 442-0839

DWG TITLE: WIRING DIAGRAM			
PROJECT: MACARTHUR PARK FOUNTAIN			
DATE: 3/17/2025	ASSEMBLER: DAVE/DENISE	FILL VALVE CONTROL	SO.: 32011256
DRAWN BY: YI-KANG	APPROVED BY: WEN C. WANG		SHEET # 3 OF 11

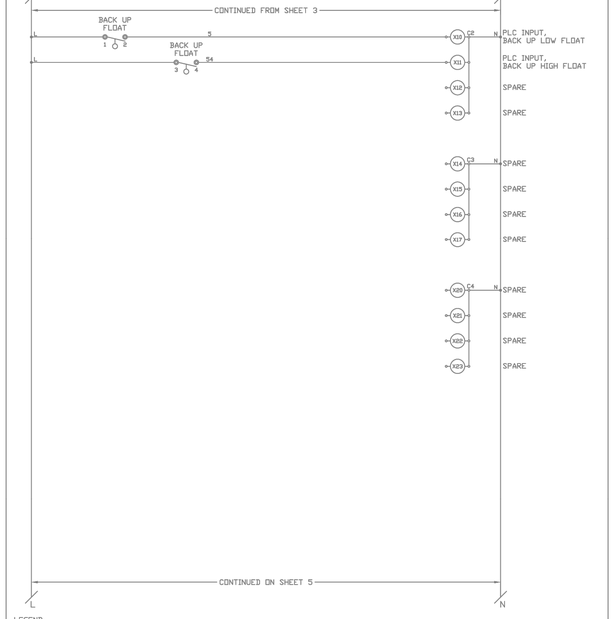

LEGEND

- ◎ - INDICATES TERMINAL BLOCK
- ——— - INDICATES FIELD WIRING
- -||- - ALL N/O CONTACTS SHOWN IN THE DE-ENERGIZED STATE
- -|/|- - ALL N/C CONTACTS SHOWN IN THE DE-ENERGIZED STATE

NOTE: MAIN CIRCUIT PROTECTION AND DISCONNECT SWITCH PROVIDED BY THE INSTALLER.

MULTI W SYSTEMS, INC.
WATER & WASTE WATER EQUIPMENT SUPPLIER
2615 STROZIER AVENUE, EL MONTE, CA 91733 PH: (626) 401-2627 FAX: (626) 442-0839

DWG TITLE: WIRING DIAGRAM			
PROJECT: MACARTHUR PARK FOUNTAIN			
DATE: 3/17/2025	ASSEMBLER: DAVE/DENISE	FILL VALVE CONTROL	SO.: 32011256
DRAWN BY: YI-KANG	APPROVED BY: WEN C. WANG		SHEET # 4 OF 11

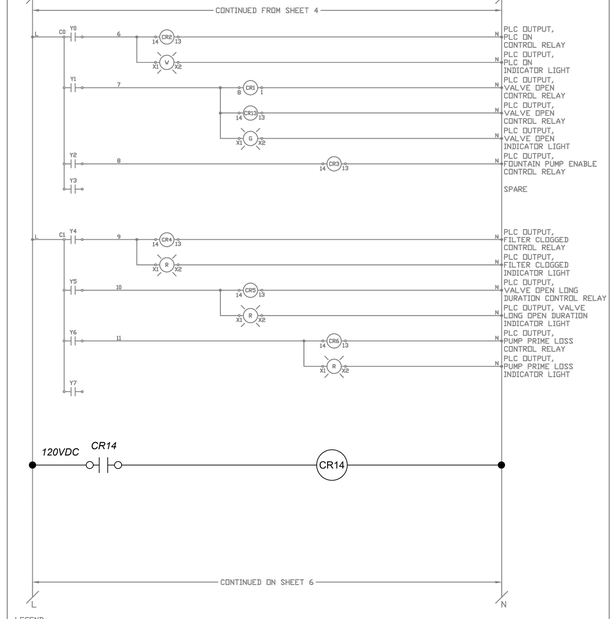

LEGEND

- ◎ - INDICATES TERMINAL BLOCK
- ——— - INDICATES FIELD WIRING
- -||- - ALL N/O CONTACTS SHOWN IN THE DE-ENERGIZED STATE
- -|/|- - ALL N/C CONTACTS SHOWN IN THE DE-ENERGIZED STATE

NOTE: MAIN CIRCUIT PROTECTION AND DISCONNECT SWITCH PROVIDED BY THE INSTALLER.

MULTI W SYSTEMS, INC.
WATER & WASTE WATER EQUIPMENT SUPPLIER
2615 STROZIER AVENUE, EL MONTE, CA 91733 PH: (626) 401-2627 FAX: (626) 442-0839

DWG TITLE: WIRING DIAGRAM			
PROJECT: MACARTHUR PARK FOUNTAIN			
DATE: 3/17/2025	ASSEMBLER: DAVE/DENISE	FILL VALVE CONTROL	SO.: 32011256
DRAWN BY: YI-KANG	APPROVED BY: WEN C. WANG		SHEET # 5 OF 11

NOTES:

1. THE ELECTRICAL CONTRACTOR SHALL INSTALL NEW CONTROL RELAYS IN THIS EXISTING PANEL. THE LAKE FILL CONTROL VALVE SHALL BE DISABLED WHEN LA SANITATION INITIATES "STORM MODE" AT THE VENICE PUMP STATION. INSTALL A MANUAL OVERRIDE SWITCH FOR LA RECREATION AND PARKS TO ENABLE OVERRIDE OF "STORM MODE" FUNCTIONALITY. PROVIDE STATUS INDICATION OF THE "OVERRIDE" BACK TO THE VENICE PUMP STATION.
2. ADD RELAY AND WIRING FROM LCP-01 TO DISABLE FILL VALVE WHEN DIVERTING WATER FROM STORM DRAIN.

ProjectLine
Technical Services, Inc

carollo

ENGINEERING
CITY OF LOS ANGELES
Environmental Engineering Division

• THIS PLAN WAS ELECTRONICALLY SIGNED AND STAMPED •

REGISTERED PROFESSIONAL ENGINEER ROBERT D. GETTER No. E 21884 Exp. 06-30-27 CIVIL

BUREAU OF ENGINEERING

VERTICAL CONTROL:
HORIZONTAL CONTROL:

SHEET TITLE: EXISTING FOUNTAIN PUMP CONTROL SCHEMATICS 1

PROJECT: MACARTHUR LAKE STORMWATER CAPTURE PROJECT

ADDRESS: MACARTHUR PARK 2230 6TH ST LOS ANGELES CA 90057

DEPARTMENT OF PUBLIC WORKS
CITY OF LOS ANGELES

NO.	REVISIONS	DATE	BY

CIP NO. 1920R004

INDEX NO. D-XXXXX

	DESIGN GROUP	DATE
ENGINEER:	ROBERT GETTER	01/22/2026
ARCHITECT:		
DESIGNED BY:	HENRY LUONG	01/22/2026
DRAWN BY:	CHARLEY KHUU / PAVEL PETIN	01/22/2026
CHECKED BY:	ROBERT GETTER	ROBERT MORRONI 01/22/2026
APPROVED BY:	ROBERT GETTER	01/22/2026

WORK ORDER
S33WMLRP, S043MSWC, S343MSWC

SHEET NAME
EP011
SHEET 89 OF 108 SHEETS

REVISION DATES (DESIGN STAGE ONLY)

FINAL DESIGN SUBMITTAL

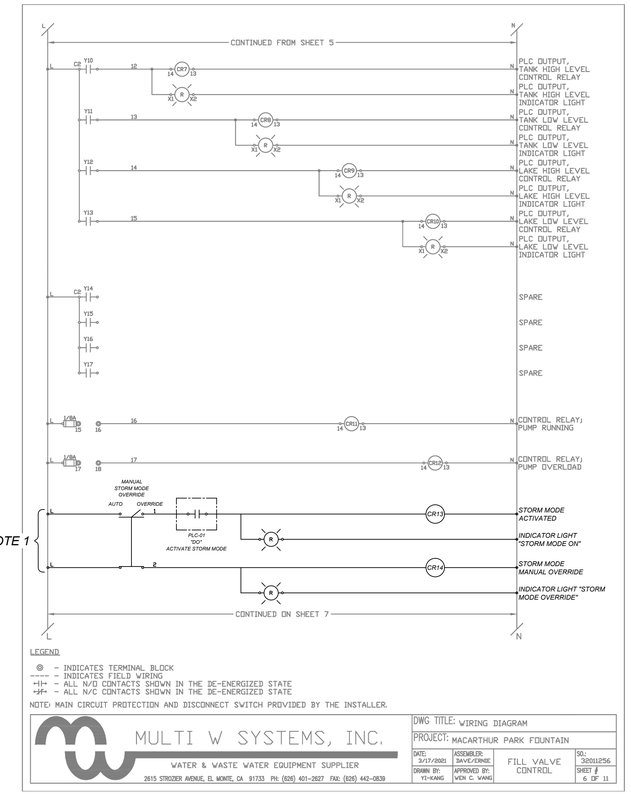

LEGEND

- ◎ – INDICATES TERMINAL BLOCK
- ----- – INDICATES FIELD WIRING
- –||– – ALL N/O CONTACTS SHOWN IN THE DE-ENERGIZED STATE
- –|/|– – ALL N/C CONTACTS SHOWN IN THE DE-ENERGIZED STATE

NOTE: MAIN CIRCUIT PROTECTION AND DISCONNECT SWITCH PROVIDED BY THE INSTALLER.

MULTI W SYSTEMS, INC.
WATER & WASTE WATER EQUIPMENT SUPPLIER
2615 STROZIER AVENUE, EL MONTE, CA 91733 PH: (626) 401-2627 FAX: (626) 442-0839

DWG TITLE:	WIRING DIAGRAM
PROJECT:	MACARTHUR PARK FOUNTAIN
DATE: 3/17/2021	ASSEMBLER: DAVE/ERNIE
DRAWN BY: YU-KANG	APPROVED BY: WEN C. WANG
FILL VALVE CONTROL	SO.: 32011256
	SHEET # 6 OF 11

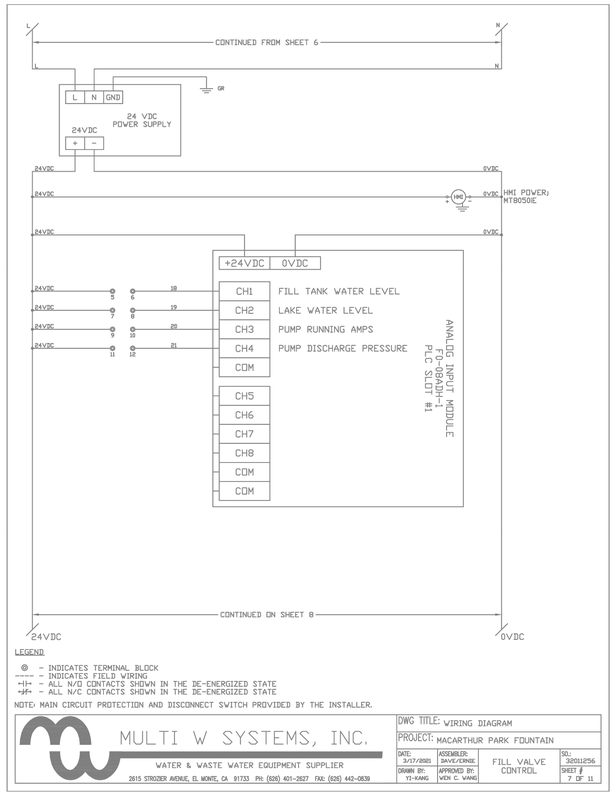

LEGEND

- ◎ – INDICATES TERMINAL BLOCK
- ----- – INDICATES FIELD WIRING
- –||– – ALL N/O CONTACTS SHOWN IN THE DE-ENERGIZED STATE
- –|/|– – ALL N/C CONTACTS SHOWN IN THE DE-ENERGIZED STATE

NOTE: MAIN CIRCUIT PROTECTION AND DISCONNECT SWITCH PROVIDED BY THE INSTALLER.

MULTI W SYSTEMS, INC.
WATER & WASTE WATER EQUIPMENT SUPPLIER
2615 STROZIER AVENUE, EL MONTE, CA 91733 PH: (626) 401-2627 FAX: (626) 442-0839

DWG TITLE:	WIRING DIAGRAM
PROJECT:	MACARTHUR PARK FOUNTAIN
DATE: 3/17/2021	ASSEMBLER: DAVE/ERNIE
DRAWN BY: YU-KANG	APPROVED BY: WEN C. WANG
FILL VALVE CONTROL	SO.: 32011256
	SHEET # 7 OF 11

TYPE 4 INDOOR ENCLOSURE,
24"H x 24"W x 8"D

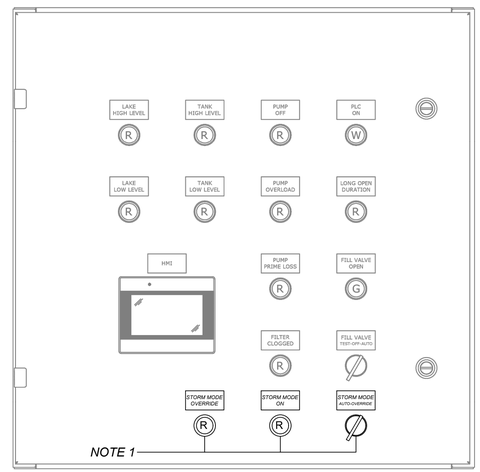

EXTERIOR PANEL – FRONT VIEW
NOT TO SCALE

NOTE:
WHITE LIGHT: PLC ON
GREEN LIGHT: FILL VALVE OPEN.
RED LIGHT: LAKE HIGH LEVEL, LAKE LOW LEVEL, TANK HIGH LEVEL, TANK LOW LEVEL, PUMP OFF, PUMP OVERLOAD, PUMP PRIME LOSS, FILTER CLOGGED, AND LONG OPEN DURATION

NOTE: MAIN CIRCUIT PROTECTION AND DISCONNECT SWITCH PROVIDED BY THE INSTALLER.

MULTI W SYSTEMS, INC.
WATER & WASTE WATER EQUIPMENT SUPPLIER
2615 STROZIER AVENUE, EL MONTE, CA 91733 PH: (626) 401-2627 FAX: (626) 442-0839

DWG TITLE:	CONTROL PANEL LAYOUT
PROJECT:	MACARTHUR PARK FOUNTAIN
DATE: 3/17/2021	ASSEMBLER: DAVE/ERNIE
DRAWN BY: YU-KANG	APPROVED BY: WEN C. WANG
FILL VALVE CONTROL	SO.: 32011256
	SHEET # 1 OF 11

NOTE:

1. THE ELECTRICAL CONTRACTOR SHALL INSTALL NEW CONTROL RELAYS IN THIS PANEL. THE LAKE FILL CONTROL VALVE SHALL BE DISABLED WHEN LA SANITATION INITIATES "STORM MODE" AT THE VENICE PUMP STATION. INSTALL A MANUAL OVERRIDE SWITCH FOR LA RECREATION AND PARKS TO ENABLE OVERRIDE OF "STORM MODE" FUNCTIONALITY. PROVIDE STATUS INDICATION OF THE "OVERRIDE" BACK TO THE VENICE PUMP STATION.

ProjectLine
Technical Services, Inc

carollo

ENGINEERING
CITY OF LOS ANGELES
Environmental Engineering Division

THIS PLAN WAS ELECTRONICALLY SIGNED AND STAMPED

REGISTERED PROFESSIONAL ENGINEER ROBERT D. GETTER No. E 21884 Exp. 06-30-27 CIVIL

BUREAU OF ENGINEERING
VERTICAL CONTROL:
HORIZONTAL CONTROL:
SHEET TITLE: EXISTING FOUNTAIN PUMP CONTROL SCHEMATICS 2
PROJECT: MACARTHUR LAKE STORMWATER CAPTURE PROJECT
ADDRESS: MACARTHUR PARK 2230 6TH ST LOS ANGELES CA 90057

DEPARTMENT OF PUBLIC WORKS
CITY OF LOS ANGELES

NO.	REVISIONS	DATE	BY

CIP NO. 1920R004
INDEX NO. D-XXXXX

	DESIGN GROUP	DATE
ENGINEER:	ROBERT GETTER	01/22/2026
ARCHITECT:		
DESIGNED BY:	HENRY LUONG	01/22/2026
DRAWN BY:	CHARLEY KHIJU / PAVEL PETIN	01/22/2026
CHECKED BY:	ROBERT GETTER	01/22/2026
APPROVED BY:	ROBERT GETTER	01/22/2026

WORK ORDER
S33WMLRP, S043MSWC, S343MSWC

SHEET NAME
EP012

SHEET 90 OF 108 SHEETS

REVISION DATES (DESIGN STAGE ONLY)

THE CITY OF LOS ANGELES OR ITS OFFICERS OR AGENTS SHALL NOT BE RESPONSIBLE FOR THE ACCURACY OR COMPLETENESS OF ELECTRONIC COPIES OF THIS PLAN SHEET.

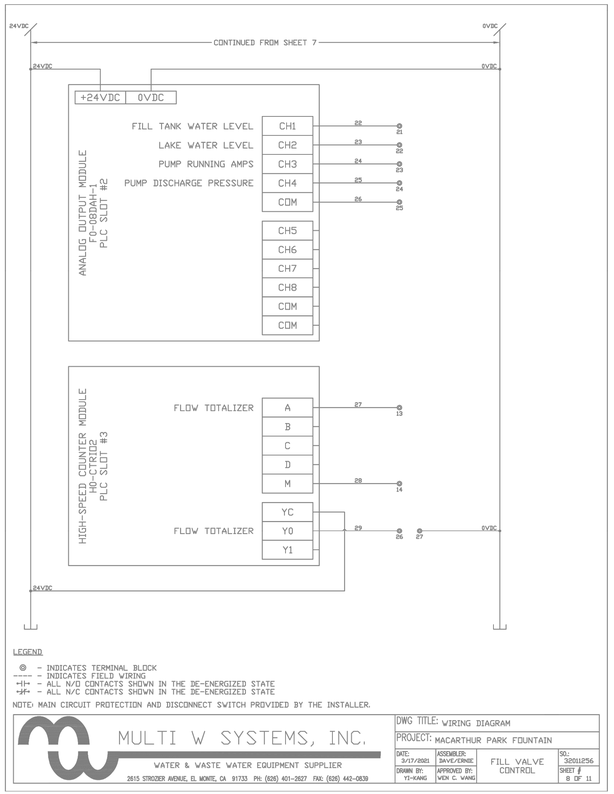

LEGEND

- ◎ – INDICATES TERMINAL BLOCK
- ——— – INDICATES FIELD WIRING
- –||– – ALL N/O CONTACTS SHOWN IN THE DE-ENERGIZED STATE
- –|/|– – ALL N/C CONTACTS SHOWN IN THE DE-ENERGIZED STATE

NOTE: MAIN CIRCUIT PROTECTION AND DISCONNECT SWITCH PROVIDED BY THE INSTALLER.

MULTI W SYSTEMS, INC.
WATER & WASTE WATER EQUIPMENT SUPPLIER
2615 STROZIER AVENUE, EL MONTE, CA 91733 PH: (626) 401-2627 FAX: (626) 442-0839

DWG TITLE: WIRING DIAGRAM			
PROJECT: MACARTHUR PARK FOUNTAIN			
DATE: 3/17/2021	ASSEMBLER: DAVE/DENISE	FILL VALVE CONTROL	SO.: 320112256
DRAWN BY: YI-KANG	APPROVED BY: WEN C. WANG		SHEET # 8 OF 11

DRY CONTACTS

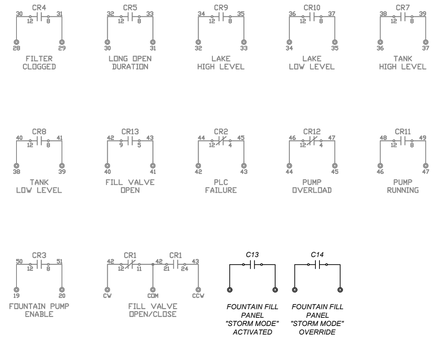

LEGEND

- ◎ – INDICATES TERMINAL BLOCK
- ——— – INDICATES FIELD WIRING
- –||– – ALL N/O CONTACTS SHOWN IN THE DE-ENERGIZED STATE
- –|/|– – ALL N/C CONTACTS SHOWN IN THE DE-ENERGIZED STATE

NOTE: MAIN CIRCUIT PROTECTION AND DISCONNECT SWITCH PROVIDED BY THE INSTALLER.

MULTI W SYSTEMS, INC.
WATER & WASTE WATER EQUIPMENT SUPPLIER
2615 STROZIER AVENUE, EL MONTE, CA 91733 PH: (626) 401-2627 FAX: (626) 442-0839

DWG TITLE: WIRING DIAGRAM			
PROJECT: MACARTHUR PARK FOUNTAIN			
DATE: 3/17/2021	ASSEMBLER: DAVE/DENISE	FILL VALVE CONTROL	SO.: 320112256
DRAWN BY: YI-KANG	APPROVED BY: WEN C. WANG		SHEET # 9 OF 11

NOTE:

1. THE ELECTRICAL CONTRACTOR SHALL INSTALL NEW CONTROL RELAYS IN THIS PANEL. THE LAKE FILL CONTROL VALVE SHALL BE DISABLED WHEN LA SANITATION INITIATES "STORM MODE" AT THE VENICE PUMP STATION. INSTALL A MANUAL OVERRIDE SWITCH FOR LA RECREATION AND PARKS TO ENABLE OVERRIDE OF "STORM MODE" FUNCTIONALITY. PROVIDE STATUS INDICATION OF THE "OVERRIDE" BACK TO THE VENICE PUMP STATION.

ProjectLine
Technical Services, Inc

carollo

ENGINEERING
CITY OF LOS ANGELES
Environmental Engineering Division

THIS PLAN WAS ELECTRONICALLY SIGNED AND STAMPED

PROFESSIONAL ENGINEER ★ REGISTERED ★ ROBERT D. GETTER ★ No. E 21884 ★ Exp. 06-30-27 ★ CIVIL ★ CALIFORNIA

BUREAU OF ENGINEERING

VERTICAL CONTROL:
HORIZONTAL CONTROL:

SHEET TITLE: EXISTING FOUNTAIN PUMP CONTROL SCHEMATICS 3
PROJECT: MACARTHUR LAKE STORMWATER CAPTURE PROJECT
ADDRESS: MACARTHUR PARK 2230 6TH ST LOS ANGELES CA 90057

DEPARTMENT OF PUBLIC WORKS

NO	REVISIONS	DATE	BY

CIP NO. 1920R004

INDEX NO. D-XXXXX

CITY OF LOS ANGELES

	DESIGN GROUP	DATE
ENGINEER:	ROBERT GETTER	01/22/2026
ARCHITECT:		
DESIGNED BY:	HENRY LUONG	01/22/2026
DRAWN BY:	CHARLEY KHUU / PAVEL PETIN	01/22/2026
CHECKED BY:	ROBERT GETTER	01/22/2026
APPROVED BY:	ROBERT GETTER	01/22/2026

WORK ORDER
S33WMLRP, S043MSWC, S343MSWC

SHEET NAME
EP013
SHEET 91 OF 108 SHEETS

THE CITY OF LOS ANGELES OR ITS OFFICERS OR AGENTS SHALL NOT BE RESPONSIBLE FOR THE ACCURACY OR COMPLETENESS OF ELECTRONIC COPIES OF THIS PLAN SHEET.

REVISION DATES (DESIGN STAGE ONLY)

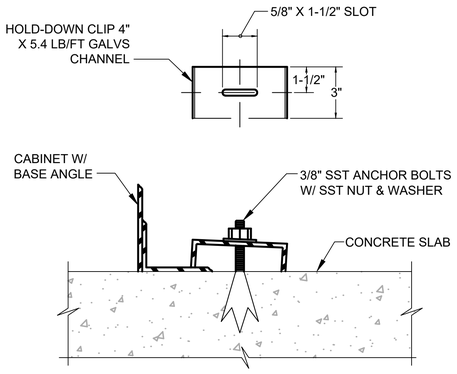

STANDARD PANEL MOUNTING — E-01 — NTS

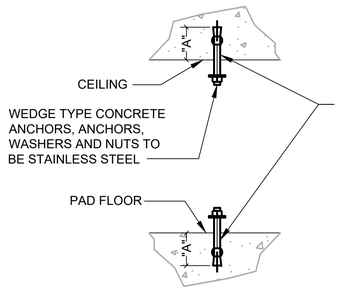

ANCHOR DIAMETER (INCHES)	MINIMUM DEPTH OF EMBEDMENT "A" (INCHES)	ALLOWABLE VALUES STONE AGG. CONC.	
		SHEAR PULL-OUT	PULLOUT
		(LBS)	(LBS)
3/8	1-3/4	930	740
1/2	2-1/4	1,240	1,260
5/8	2-3/4	1,660	2,110
3/4	3-3/8	2,390	3,560
7/8	4	3,140	4,990
1	4-1/2	3,860	6,320
1-1/4	5-1/2	5,390	9,640

DRILLED-IN CONCRETE ANCHOR (SEISMIC ZONE -4) — E-02 — NTS

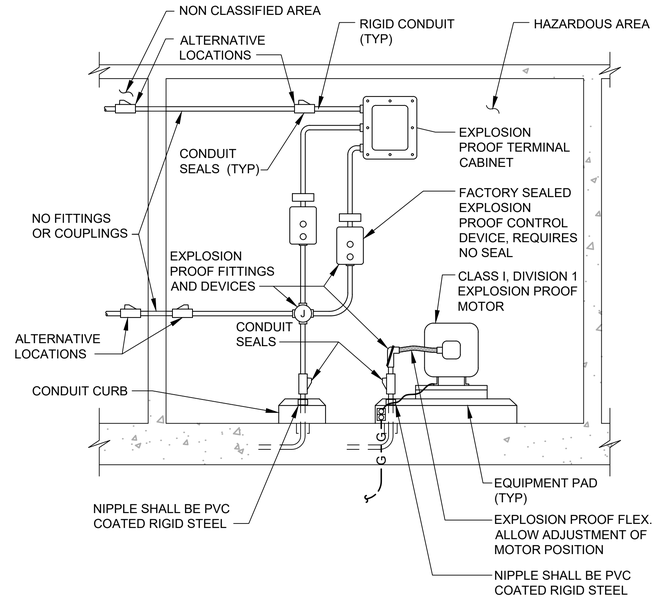

NOTES:

1. SEE NATIONAL ELECTRICAL CODE ARTICLE 501 AND SPECIFICATION DIVISION 16 FOR ADDITIONAL REQUIREMENTS.
2. SEE DRAWINGS OR SCHEDULES FOR SEPARATE POWER, CONTROL AND INSTRUMENTATION RACEWAYS.
3. EQUIPMENT INSTALLATION SHOWN IN THIS DETAIL IS TYPICAL AND SHALL BE ADJUSTED ACCORDINGLY TO MEET PROJECT INSTALLATION REQUIREMENTS.

HAZARDOUS AREA RACEWAY DETAIL — E-03 — NTS

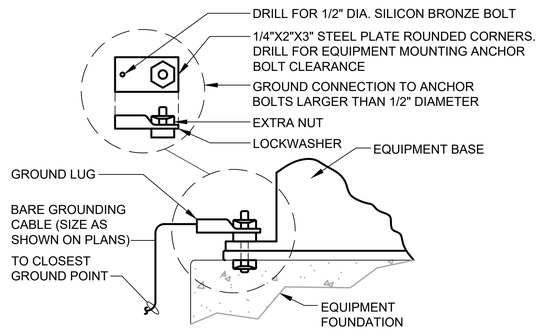

NOTE:

1. THIS DETAIL GROUND LUG SHALL BE BOLTED TO THE ANCHOR WITH A SECOND NUT AND LOCKWASHER. WHEN THE ANCHOR BOLT IS TOO LARGE FOR THE GROUND LUG A STEEL PLATE SHALL BE PROVIDED. DRILLED FOR ANCHOR BOLT CLEARANCE AND INSTALLED AS SHOWN WITH GROUND CONNECTOR BOLTED TO THE STEEL PLATE WITH 1/2" SILICONE BRONZE BOLT NUT AND FLAT WASHER.

GROUND CONNECTION TO EQUIPMENT MOUNTING ANCHOR BOLT — E-04 — NTS

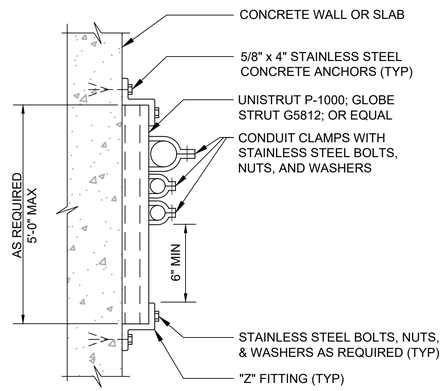

ELEVATION

NOTES:

1. THIS DETAIL TYPICAL FOR BOTH VERTICAL AND HORIZONTAL MOUNTING - FOR HORIZONTAL MOUNTING, PLACE 1"± NON-SHRINK GROUT UNDER THE SUPPORT.
2. PREFORMED CHANNEL, FITTINGS AND CLAMPS SHALL BE HOT-DIP GALVANIZED STEEL. FIELD COAT ALL CUTS.
3. CHANNELS TO BE SPACED AT 5'-0" OC MAXIMUM.

TYPE 1 CONDUIT SUPPORT — E-05 — NTS

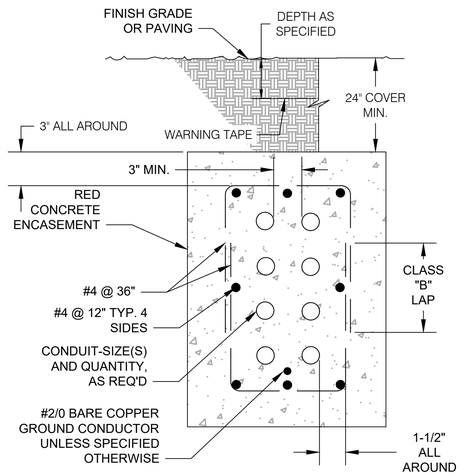

NOTES:

1. ALL DIMENSIONS SHOWN ARE MINIMUM UNLESS SPECIFIED OTHERWISE.
2. THIS ENCASEMENT FOR ALL AREAS NOT UNDER CONCRETE FLOORS AND SLABS.
3. P SUBSCRIPT ELECTRICAL POWER OR CONTROL CONDUIT.
4. C SUBSCRIPT COMMUNICATION (TELEPHONE, DATA, INSTRUMENTATION) CONDUIT.
5. X SUBSCRIPT SPARE CONDUIT.

ENCASED ELECTRICAL CONDUITS DUCT BANK — E-06 — NTS

ProjectLine
Technical Services, Inc

carollo

ENGINEERING
CITY OF LOS ANGELES
Environmental Engineering Design

THIS PLAN WAS ELECTRONICALLY SIGNED AND STAMPED

REGISTERED PROFESSIONAL ENGINEER ROBERT D. GETTER No. E 21586 Exp. 06-30-27 CIVIL

BUREAU OF ENGINEERING

VERTICAL CONTROL:
HORIZONTAL CONTROL:

SHEET TITLE: ELECTRICAL DETAILS SHEET 1
PROJECT: MACARTHUR LAKE STORMWATER CAPTURE PROJECT
ADDRESS: MACARTHUR PARK 2230 6TH ST LOS ANGELES CA 90057

DEPARTMENT OF PUBLIC WORKS

NO	REVISIONS	DATE	BY

CIP NO. 1920R004

INDEX NO. D-XXXXX

CITY OF LOS ANGELES

	DESIGN GROUP	DATE
ENGINEER:	ROBERT GETTER	01/22/2026
ARCHITECT:		01/22/2026
DESIGNED BY:	HENRY LUONG	01/22/2026
DRAWN BY:	CHARLEY KHUU / PAVEL PETIN	01/22/2026
CHECKED BY:	ROBERT GETTER	01/22/2026
APPROVED BY:	ROBERT GETTER	01/22/2026

WORK ORDER S33WMLRP, S043MSWC, S343MSWC

SHEET NAME EP014

SHEET 92 OF 108 SHEETS

THE CITY OF LOS ANGELES OR ITS OFFICERS OR AGENTS SHALL NOT BE RESPONSIBLE FOR THE ACCURACY OR COMPLETENESS OF ELECTRONIC COPIES OF THIS PLAN SHEET.

REVISION DATES (DESIGN STAGE ONLY)

SHEET VERSION 4.0.1 FILE PATH: C:\PW_WORKING\CAROLLO_200000\D0225944\203818EP014.DWG PLOT DATE: 1/15/2026 3:59 PM SAVED: 1/15/2026 3:49 PM SAVED BY:CHARLEY

FINAL DESIGN SUBMITTAL

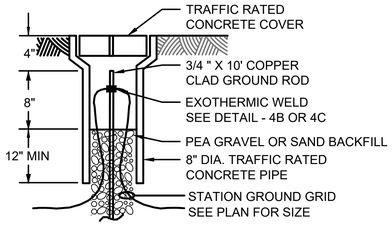

NOTE:

1. PROVIDE MINIMUM OF FOUR GROUND RODS IN GROUND WELLS.

GROUND WELL — E-07 — NTS

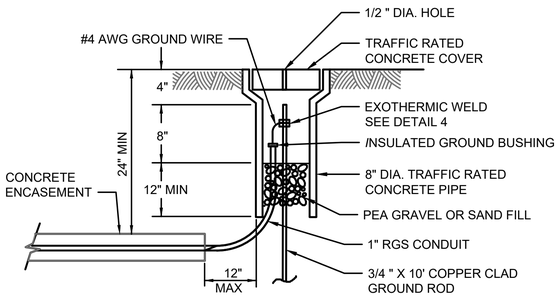

INSULATED GROUND CABLE MOUNTING IN GROUND WELL — E-08 — NTS

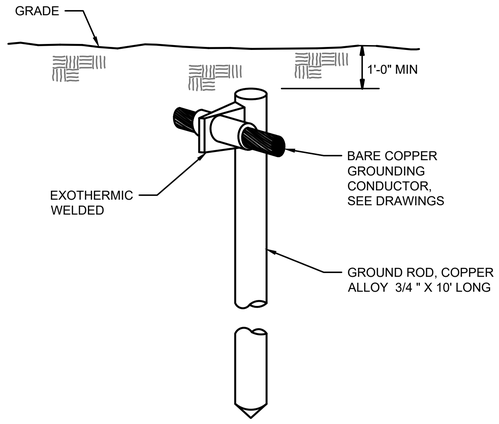

NOTE:

1. CONTRACTOR SHALL PROVIDE UP TO FOUR GROUND RODS CONNECTED TO GROUND LOOPS AROUND ELECTRICAL ENCLOSURE. CONTRACTOR SHALL SUBMIT PROPOSED GROUNDING PLAN FOR APPROVAL.

BURIED GROUND ROD — E-9 — NTS

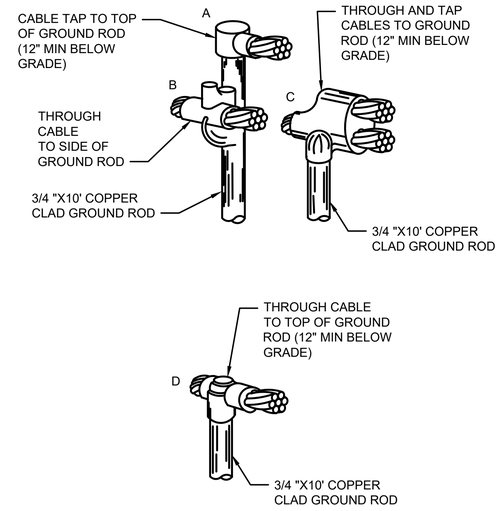

EXOTHERMIC WELDS CABLE TO GROUND ROD — E-10 — NTS

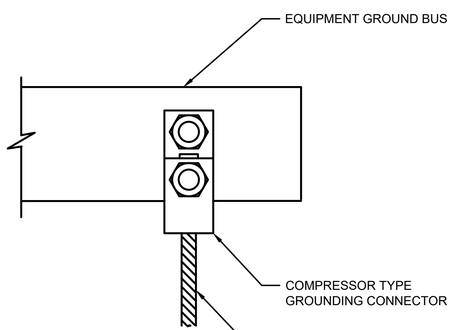

TYPICAL GROUND BUS CONNECTION — E-11 — NTS

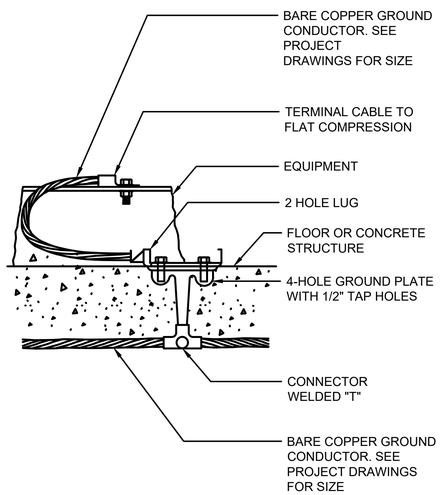

TYPICAL GROUND EQUIPMENT CONNECTION — E-12 — NTS

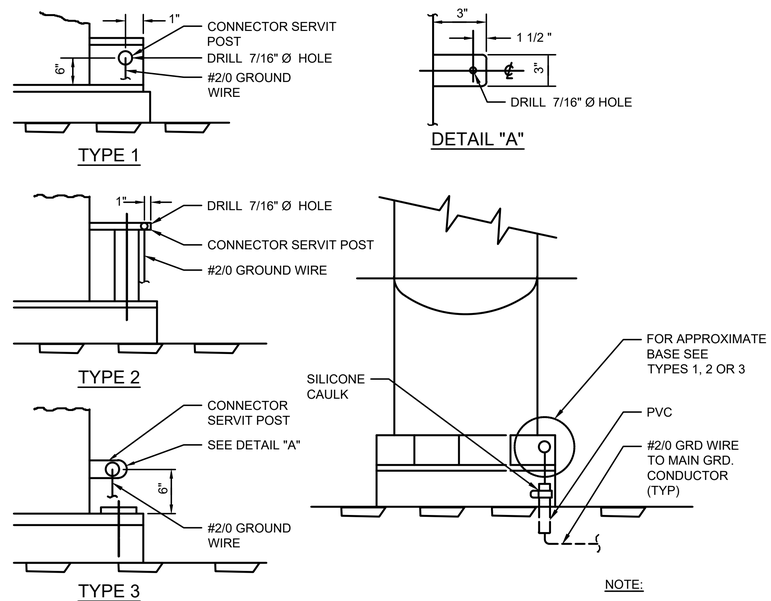

NOTE:

1. ALL TANKS, LADDERS AND HANDRAILS TO BE GROUNDED.

TYPICAL EQUIPMENT GROUNDING — E-13 — NTS

ProjectLine
Technical Services, Inc

carollo

ENGINEERING
CITY OF LOS ANGELES
Environmental Engineering Design

• THIS PLAN WAS ELECTRONICALLY SIGNED AND STAMPED •

REGISTERED PROFESSIONAL ENGINEER ★ ROBERT D. GETTER ★ No. E 21884 ★ Exp. 06-30-27 ★ CIVIL ★ STATE OF CALIFORNIA

BUREAU OF ENGINEERING

VERTICAL CONTROL:
HORIZONTAL CONTROL:

SHEET TITLE: ELECTRICAL DETAILS SHEET 2

PROJECT: MACARTHUR LAKE STORMWATER CAPTURE PROJECT

ADDRESS: MACARTHUR PARK
2230 6TH ST LOS ANGELES CA 90057

DEPARTMENT OF PUBLIC WORKS

NO	REVISIONS	DATE	BY

CIP NO. 1920R004

INDEX NO. D-XXXXX

CITY OF LOS ANGELES

	DESIGN GROUP	DATE
ENGINEER:	ROBERT GETTER	01/22/2026
ARCHITECT:		01/22/2026
DESIGNED BY:	HENRY LUONG	01/22/2026
DRAWN BY:	CHARLEY KHUU / PAVEL PETIN	01/22/2026
CHECKED BY:	ROBERT GETTER / ROBERT MORRONI	01/22/2026
APPROVED BY:	ROBERT GETTER	01/22/2026

WORK ORDER
S33WMLRP, S043MSWC, S343MSWC

SHEET NAME
EP015

SHEET 93 OF 108 SHEETS

THE CITY OF LOS ANGELES OR ITS OFFICERS OR AGENTS SHALL NOT BE RESPONSIBLE FOR THE ACCURACY OR COMPLETENESS OF ELECTRONIC COPIES OF THIS PLAN SHEET.

REVISION DATES
(DESIGN STAGE ONLY)

FINAL DESIGN SUBMITTAL

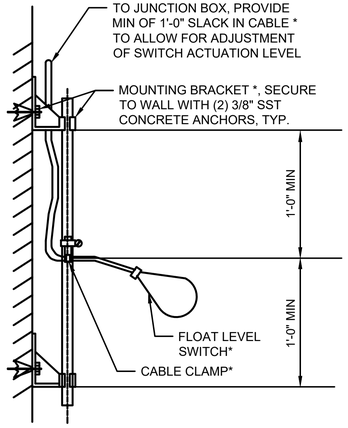

NOTE:

1. COMPONENTS DESIGNATED BY * ARE SUPPLIED BY INSTRUMENT MANUFACTURER.

TYPICAL FLOAT TYPE LEVEL SWITCH INSTALLATION | E-14 | NTS

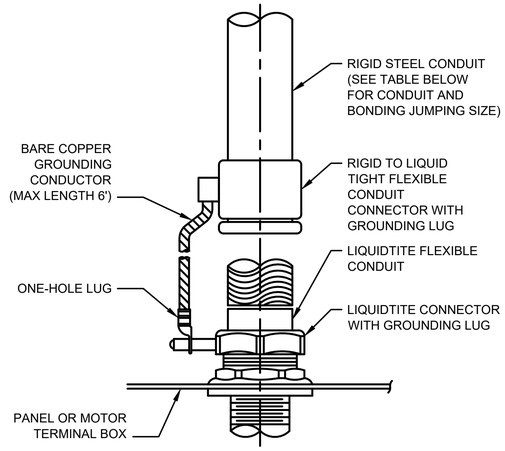

FLEXIBLE CONDUIT EXTERNAL GROUND | E-15 | NTS

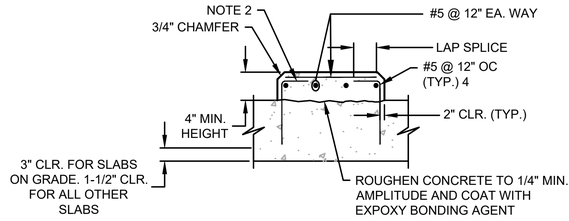

NOTES:

1. PROVIDE FOR FREE STANDING PANELS AND EQUIPMENT MOUNTED INDOORS.
2. DRILL EXISTING CONCRETE SLAB AND ADD #5 EPOXY DOWELS @ 12" OC FOR CONNECTION TO EQUIPMENT BASE REBAR.
3. PROVIDE TYPE 316 SS ANCHOR BOLTS AND MOUNTING HARDWARE FOR EQUIPMENT.

EQUIPMENT BASE DETAIL | E-16 | NTS

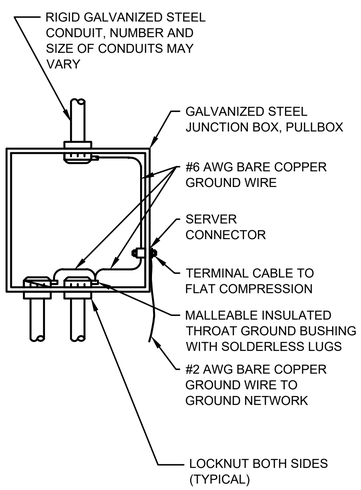

TYPICAL BONDING OF CONDUITS IN BOXES | E-17 | NTS

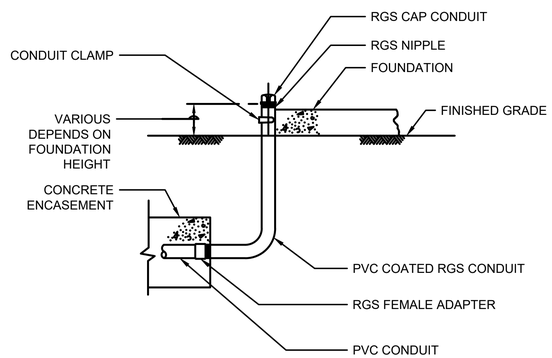

TYPICAL CONDUIT STUB-UP | E-18 | NTS

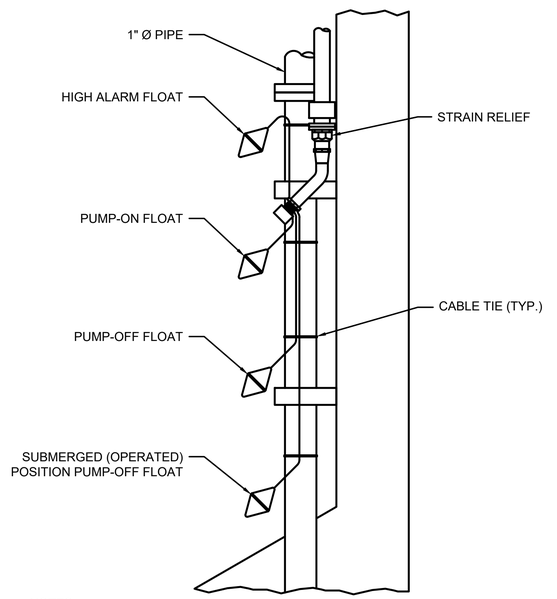

NOTES:

1. NUMBER OF FLOATS SHALL BE AS SHOWN ON SCHEMATICS AND P&IDS.
2. FLOATS SHOWN IN FREE HANGING POSITION.

FLOAT SWITCH INSTALLATION | E-19 | NTS

ProjectLine
Technical Services, Inc

carollo

ENGINEERING
CITY OF LOS ANGELES
Environmental Engineering Design

THIS PLAN WAS ELECTRONICALLY SIGNED AND STAMPED
REGISTERED PROFESSIONAL ENGINEER ROBERT D. GETTER No. E 21884 Exp. 06-30-27 ELECTRICAL

BUREAU OF ENGINEERING
VERTICAL CONTROL:
HORIZONTAL CONTROL:
SHEET TITLE: ELECTRICAL DETAILS SHEET 3
PROJECT: MACARTHUR LAKE STORMWATER CAPTURE PROJECT
ADDRESS: MACARTHUR PARK 2230 6TH ST LOS ANGELES CA 90057

DEPARTMENT OF PUBLIC WORKS
CITY OF LOS ANGELES

NO.	REVISIONS	DATE	BY

CIP NO. 1920R004
INDEX NO. D-XXXXX

	DESIGN GROUP	DATE
ENGINEER:	ROBERT GETTER	01/22/2026
ARCHITECT:		01/22/2026
DESIGNED BY:	HENRY LUONG	01/22/2026
DRAWN BY:	CHARLEY KHUU / PAVEL PETIN	01/22/2026
CHECKED BY:	ROBERT GETTER ROBERT MORRONI	01/22/2026
APPROVED BY:	ROBERT GETTER	01/22/2026

WORK ORDER S33WMLRP, S043MSWC, S343MSWC

SHEET NAME
EP016
SHEET 94 OF 108 SHEETS

THE CITY OF LOS ANGELES OR ITS OFFICERS OR AGENTS SHALL NOT BE RESPONSIBLE FOR THE ACCURACY OR COMPLETENESS OF ELECTRONIC COPIES OF THIS PLAN SHEET.

REVISION DATES (DESIGN STAGE ONLY)

FINAL DESIGN SUBMITTAL

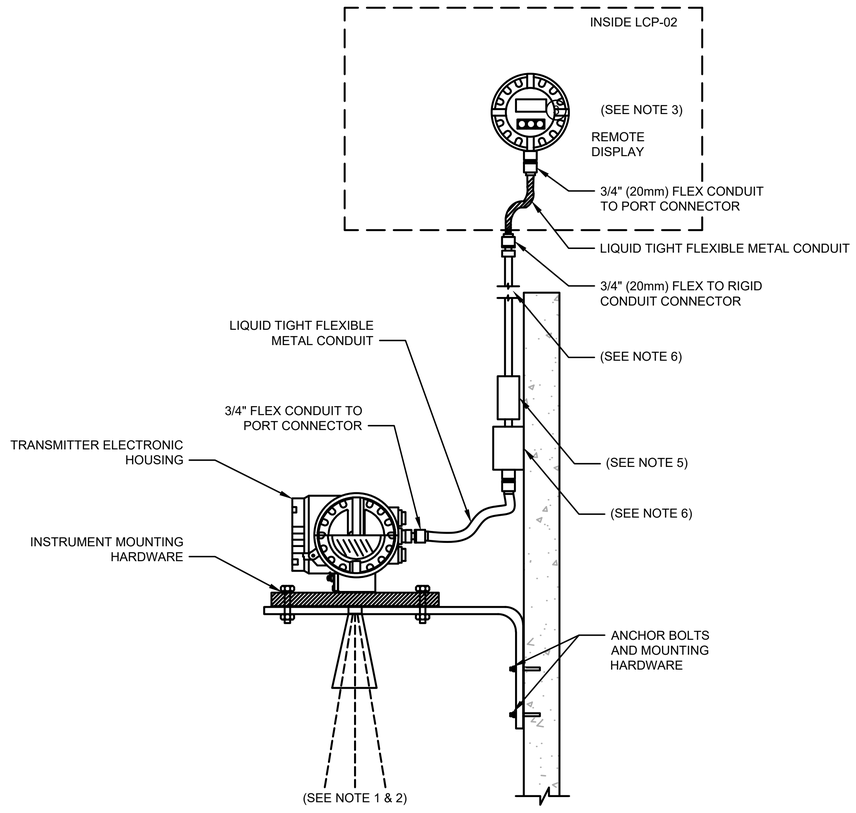

TYPICAL BRACKET INSTALLED - WALL MOUNT WITH REMOTE DISPLAY

NOTES:

1. PROVIDE MECHANICAL SUPPORT AND FITTINGS FOR ROUTED CONDUIT.
2. REFER TO DIVISION 16 SPECIFICATIONS FOR FLEX AND RIGID CONDUIT MATERIAL AND USAGE LIMITATIONS.
3. USE PVC COATED SS TIE-WRAPS TO NEATLY COIL AND SECURE ANY EXCESS SENSOR CABLING AS SHOWN.
4. ALL MOUNTING HARDWARE SHALL BE TYPE 316 SS.

KEYNOTES:

1. THE SENSOR HORN BOTTOM RIM SHALL BE INSTALLED NO LESS THAN 12" (300mm) ABOVE THE MAXIMUM TANK LEVEL AND PROPERLY ALIGNED PER THE MANUFACTURER'S REQUIREMENTS.
2. SENSOR SHALL BE INSTALLED SUCH THAT THE BEAM ANGLE DOES NOT ENCOUNTER ANY PHYSICAL DEVICE OR FLOW STREAM IN THE BEAM'S SENSING PATH.
3. MOUNT TRANSMITTER INSIDE LCP-02 PANEL.
4. MANUFACTURE FURNISHED ANGLE BRACKET (WITH MOUNTING HARDWARE) SHALL BE SIZED AND TAPPED TO SUPPORT WALL-MOUNT INSTALLATION. REFER TO INSTRUMENT SCHEDULE OR DATA SHEET FOR MEASURING DEPTH REQUIREMENT.
5. CONTRACTOR TO PROVIDE VAPOR-SEALED CONDUIT AND TERMINAL BOX SEALS FOR EXPLOSION-PROOF INSTALLATION IN ACCORDANCE WITH NEC 503.
6. REFER TO ELECTRICAL DETAILS FOR CONDUIT INSTALLATION IN PUMP VAULT TO TERMINAL BOX.

ULTRASONIC LEVEL TRANSMITTER | E-20 | NTS

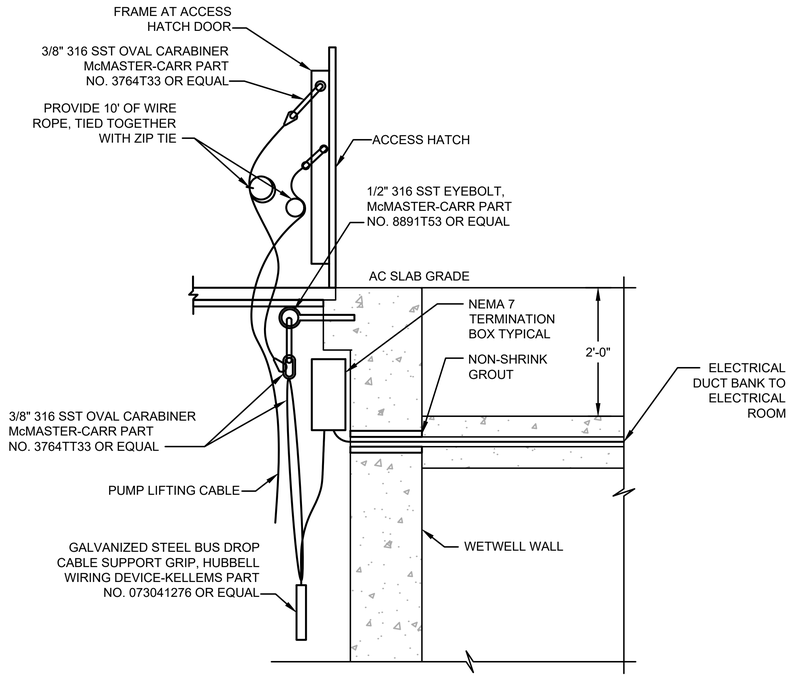

TYPICAL PUMP TERMINATION BOX DETAIL | E-21 | NTS

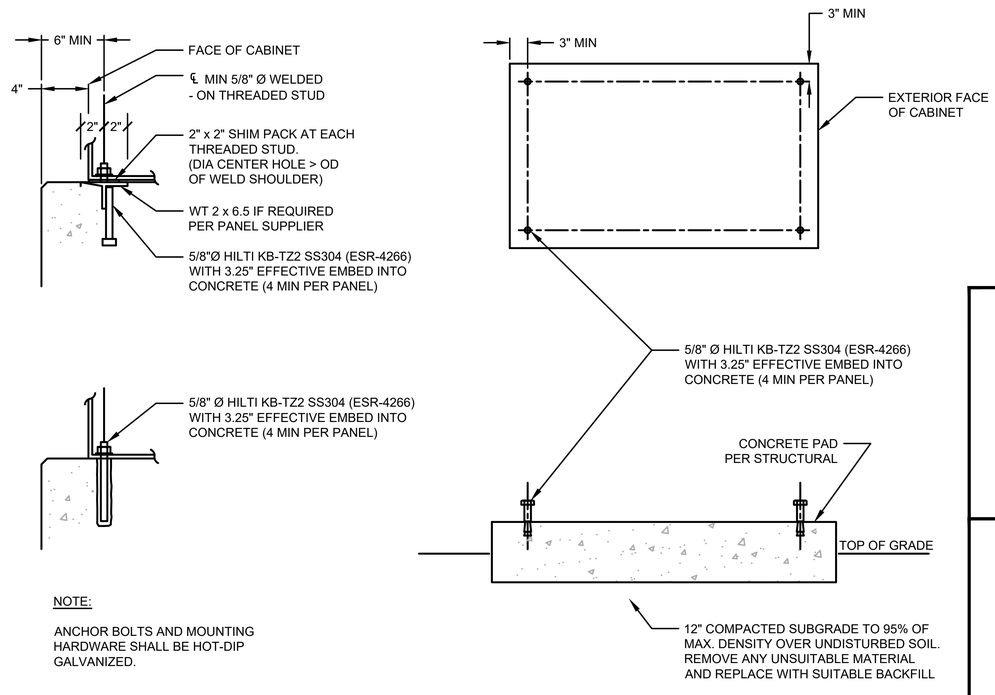

NOTE:

ANCHOR BOLTS AND MOUNTING HARDWARE SHALL BE HOT-DIP GALVANIZED.

EQUIPMENT PAD DETAIL | E-22 | NTS

ProjectLine
Technical Services, Inc

carollo

ENGINEERING
CITY OF LOS ANGELES
Environmental Engineering Division

THIS PLAN WAS ELECTRONICALLY SIGNED AND STAMPED

REGISTERED PROFESSIONAL ENGINEER ★ ROBERT D. GETTER ★ No. E 21586 ★ Exp. 06-30-27 ★ CIVIL ★ STATE OF CALIFORNIA

BUREAU OF ENGINEERING

VERTICAL CONTROL:
HORIZONTAL CONTROL:

SHEET TITLE: ELECTRICAL DETAILS SHEET 4
PROJECT: MACARTHUR LAKE STORMWATER CAPTURE PROJECT
ADDRESS: MACARTHUR PARK 2230 6TH ST LOS ANGELES CA 90057

DEPARTMENT OF PUBLIC WORKS

NO	REVISIONS	DATE	BY

CIP NO. 1920R004

INDEX NO. D-XXXXX

CITY OF LOS ANGELES

	DESIGN GROUP	DATE
ENGINEER:	ROBERT GETTER	01/22/2026
ARCHITECT:		
DESIGNED BY:	HENRY LUONG	01/22/2026
DRAWN BY:	CHARLEY KHIU / PAVEL PETIN	01/22/2026
CHECKED BY:	ROBERT GETTER	01/22/2026
APPROVED BY:	ROBERT GETTER	01/22/2026

WORK ORDER S33WMLRP, S043MSWC, S343MSWC

SHEET NAME
EP017
SHEET 95 OF 108 SHEETS

THE CITY OF LOS ANGELES OR ITS OFFICERS OR AGENTS SHALL NOT BE RESPONSIBLE FOR THE ACCURACY OR COMPLETENESS OF ELECTRONIC COPIES OF THIS PLAN SHEET.

REVISION DATES (DESIGN STAGE ONLY)

SHEET VERSION 4.0.1 FILE PATH: C:\PW_WORKING\CAROLLO_200000\D0225944\203818EP017.DWG PLOT DATE: 1/15/2026 3:59 PM SAVED: 1/15/2026 3:49 PM SAVED BY:CHARLEY

FINAL DESIGN SUBMITTAL

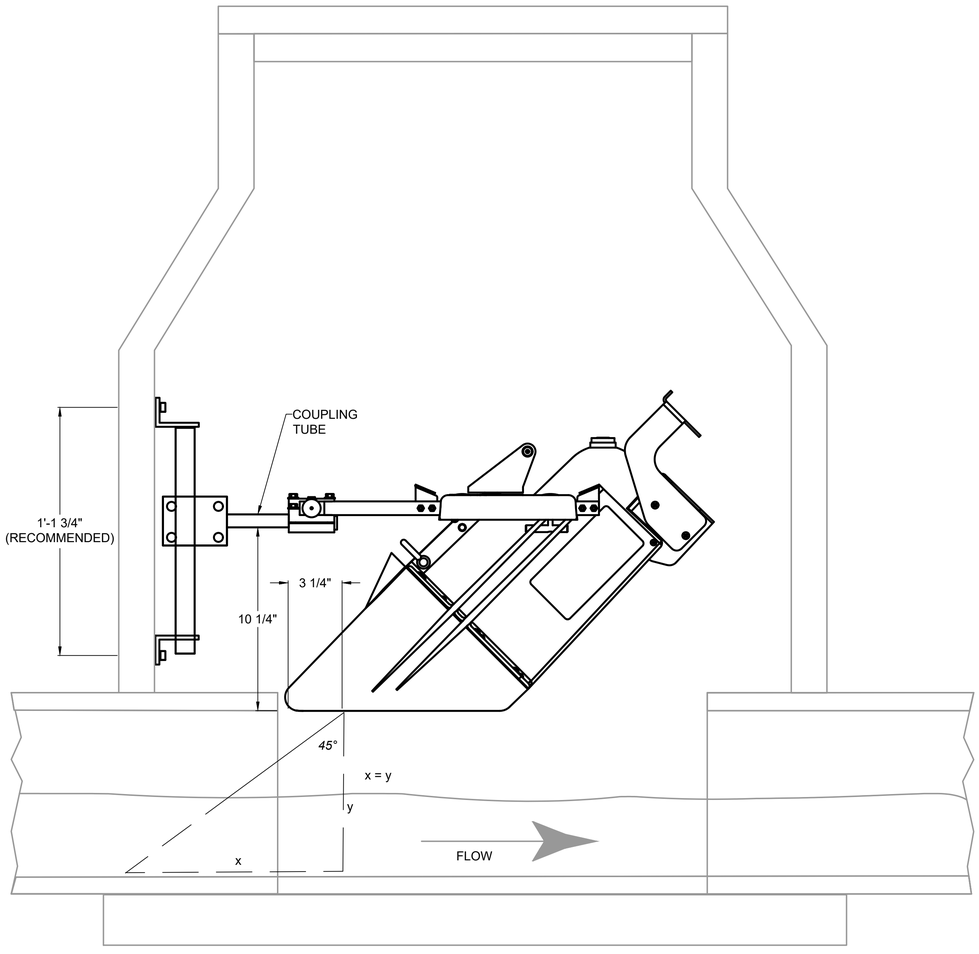

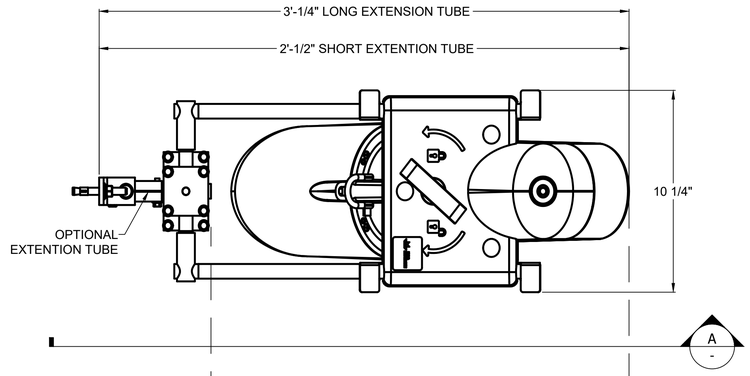

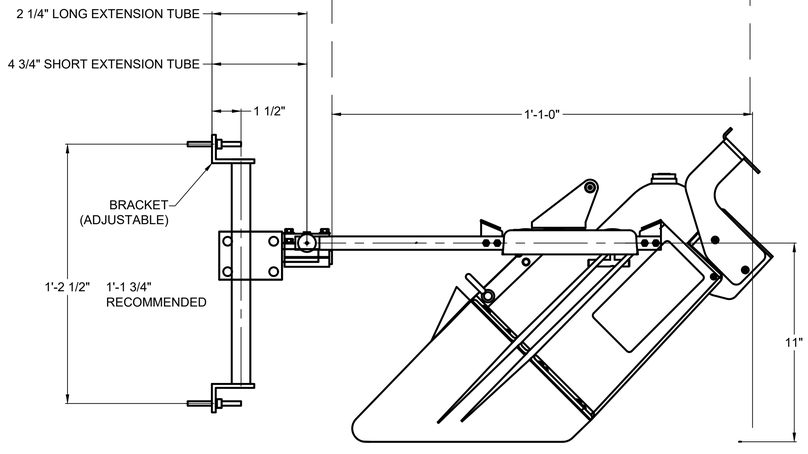

DETAIL "A"

NOTES:

1. DETAIL APPLIES TO DESIGN BASIS MFG. PROVIDE MOUNTING DETAILS HARDWARE AS REQUIRED BY CONTRACTOR'S PROPOSED MFG.
2. SUBMIT INSTALLATION PLAN WITH PROPOSED FLOW METER, INCLUDING FIELD CALIBRATION PROCEDURES.
3. PROVIDE 8 HOURS MANUFACTURER'S FIELD SERVICE REPRESENTATIVE TO VERIFY PROPER INSTALLATION AND CALIBRATION OF FLOW METERS. SUBMIT CERTIFICATION OF PROPER INSTALLATION SIGNED BY MANUFACTURER'S FIELD SERVICE REP.
4. ALL MOUNTING HARDWARE SHALL BE TYPE 316 SS.

AREA-VELOCITY FLOW METER (1 EP002) (1 EP004)
TYPICAL FOR FE-303 AND FE-505

AREA VELOCITY FLOW METER MOUNTING DETAIL

E-23

NTS

ProjectLine
Technical Services, Inc

carollo

ENGINEERING
CITY OF LOS ANGELES
Environmental Engineering Division

THIS PLAN WAS ELECTRONICALLY SIGNED AND STAMPED

REGISTERED PROFESSIONAL ENGINEER ROBERT D. GETTER No. E 21984 Exp. 06-30-27 CIVIL

BUREAU OF ENGINEERING

VERTICAL CONTROL:
HORIZONTAL CONTROL:

SHEET TITLE: ELECTRICAL DETAILS SHEET 5
PROJECT: MACARTHUR LAKE STORMWATER CAPTURE PROJECT
ADDRESS: MACARTHUR PARK 2230 6TH ST LOS ANGELES CA 90057

DEPARTMENT OF PUBLIC WORKS

NO	REVISIONS	DATE	BY

CIP NO. 1920R004

INDEX NO. D-XXXXX

CITY OF LOS ANGELES

DESIGN GROUP		DATE
ENGINEER:	ROBERT GETTER	01/22/2026
ARCHITECT:		
DESIGNED BY:	HENRY LUONG	01/22/2026
DRAWN BY:	CHARLEY KHUU / PAVEL PETIN	01/22/2026
CHECKED BY:	ROBERT GETTER	01/22/2026
APPROVED BY:	ROBERT GETTER	01/22/2026

WORK ORDER
S33WMLRP, S043MSWC, S343MSWC

SHEET NAME
EP018

SHEET 96 OF 108 SHEETS

THE CITY OF LOS ANGELES OR ITS OFFICERS OR AGENTS SHALL NOT BE RESPONSIBLE FOR THE ACCURACY OR COMPLETENESS OF ELECTRONIC COPIES OF THIS PLAN SHEET.

REVISION DATES (DESIGN STAGE ONLY)

SHEET VERSION 4.0.1 FILE PATH: C:\PW_WORKING\CAROLLO_200000\D0225944\203818EP018.DWG PLOT DATE: 1/15/2026 3:59 PM SAVED: 1/15/2026 3:49 PM SAVED BY:CHARLEY

FINAL DESIGN SUBMITTAL

THE CITY OF LOS ANGELES OR ITS OFFICERS OR AGENTS SHALL NOT BE RESPONSIBLE FOR THE ACCURACY OR COMPLETENESS OF ELECTRONIC COPIES OF THIS PLAN SHEET.

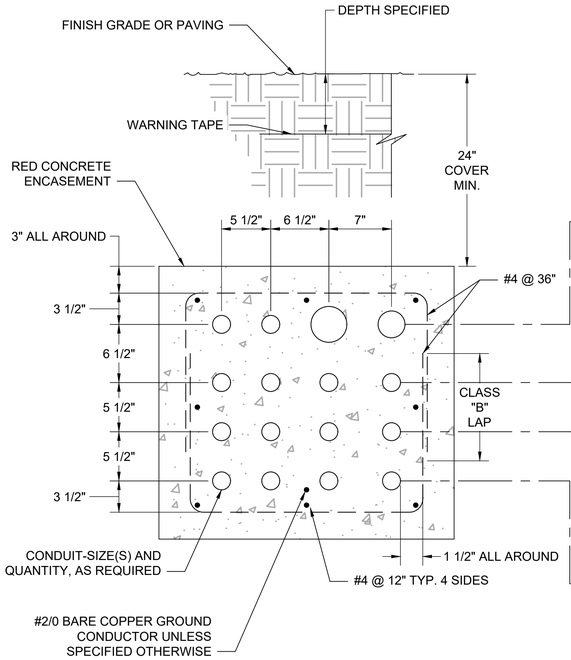

NOTES:

1. ALL DIMENSIONS SHOWN ARE MINIMUM UNLESS SPECIFIED OTHERWISE.
2. THIS ENCASEMENT FOR ALL AREAS NOT UNDER CONCRETE FLOORS AND SLABS.
3. P SUBSCRIPT ELECTRICAL POWER OR CONTROL CONDUIT.
4. C SUBSCRIPT COMMUNICATION (TELEPHONE, DATA, INSTRUMENTATION) CONDUIT.
5. X SUBSCRIPT SPARE CONDUIT.

C3.0.0	C3.0.1	C2.0.0	S1.0.0
C4.0.0	C7.0.0	X4 (SPARE)	X2 (SPARE)
P3.0	P4.0	P5.0	P7.0
P8.0	P9.0	P10	P11

DUCT BANK SECTION — E-24 — NTS

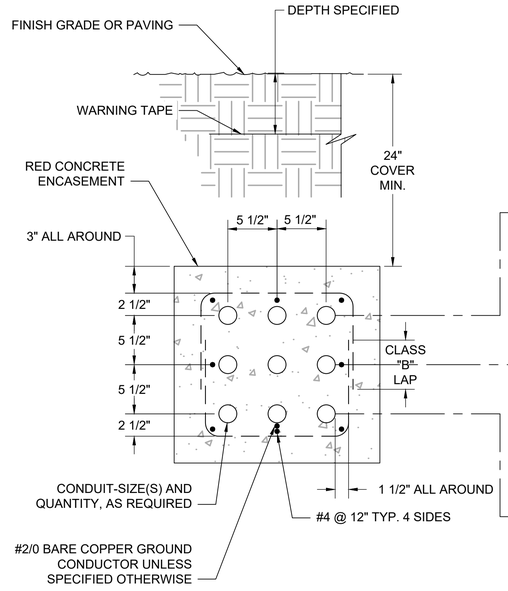

NOTES:

1. ALL DIMENSIONS SHOWN ARE MINIMUM UNLESS SPECIFIED OTHERWISE.
2. THIS ENCASEMENT FOR ALL AREAS NOT UNDER CONCRETE FLOORS AND SLABS.
3. P SUBSCRIPT ELECTRICAL POWER OR CONTROL CONDUIT.
4. C SUBSCRIPT COMMUNICATION (TELEPHONE, DATA, INSTRUMENTATION) CONDUIT.
5. X SUBSCRIPT SPARE CONDUIT.

C3.1.0	C4.1.0 C7.1.0	2" (SPARE)
S1.0.2	S5.0.0	P7.1
P3.1	P4.1	P5.1

DUCT BANK SECTION — E-25 — NTS

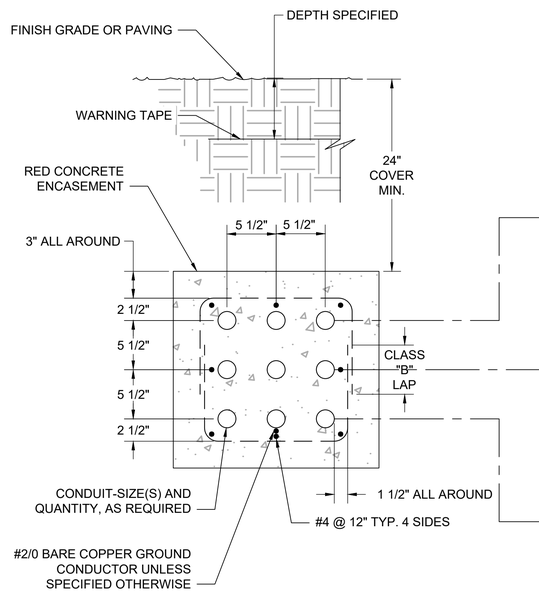

NOTES:

1. ALL DIMENSIONS SHOWN ARE MINIMUM UNLESS SPECIFIED OTHERWISE.
2. THIS ENCASEMENT FOR ALL AREAS NOT UNDER CONCRETE FLOORS AND SLABS.
3. P SUBSCRIPT ELECTRICAL POWER OR CONTROL CONDUIT.
4. C SUBSCRIPT COMMUNICATION (TELEPHONE, DATA, INSTRUMENTATION) CONDUIT.
5. X SUBSCRIPT SPARE CONDUIT.

C3.2.0	C4.2.0 C7.1.0	2" (SPARE)
S4.0.0	S5.0.0	P7.1
P3.2	P4.2	P5.2

DUCT BANK SECTION — E-26 — NTS

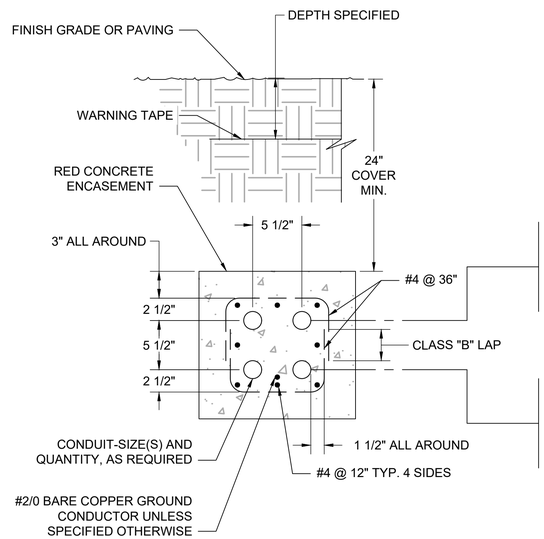

P8.1	S1.0.1	
C2.1.0	2" (SPARE)	

DUCT BANK SECTION — E-27 — NTS

ProjectLine
Technical Services, Inc

carollo

ENGINEERING
CITY OF LOS ANGELES
Environmental Engineering Division

THIS PLAN WAS ELECTRONICALLY SIGNED AND STAMPED

PROFESSIONAL ENGINEER ★ REGISTERED ★ ROBERT D. GETTER No. E 21586 Exp. 06-30-27 ★ CIVIL ★ STATE OF CALIFORNIA

BUREAU OF ENGINEERING

VERTICAL CONTROL:
HORIZONTAL CONTROL:

SHEET TITLE: ELECTRICAL DETAILS SHEET 6
PROJECT: MACARTHUR LAKE STORMWATER CAPTURE PROJECT
ADDRESS: MACARTHUR PARK 2230 6TH ST LOS ANGELES CA 90057

NO	REVISIONS	DATE	BY

CIP NO. 1920R004

INDEX NO. D-XXXXX

DEPARTMENT OF PUBLIC WORKS

		DATE
DESIGN GROUP		01/22/2026
ENGINEER:	ROBERT GETTER	01/22/2026
ARCHITECT:		01/22/2026
DESIGNED BY:	HENRY LUONG	01/22/2026
DRAWN BY:	CHARLEY KHUU / PAVEL PETIN	01/22/2026
CHECKED BY:	ROBERT GETTER	01/22/2026
APPROVED BY:	ROBERT GETTER	01/22/2026

CITY OF LOS ANGELES

WORK ORDER
S33WMLRP, S043MSWC, S343MSWC

SHEET NAME
EP019
SHEET 97 OF 108 SHEETS

REVISION DATES (DESIGN STAGE ONLY)

FINAL DESIGN SUBMITTAL

THE CITY OF LOS ANGELES OR ITS OFFICERS OR AGENTS SHALL NOT BE RESPONSIBLE FOR THE ACCURACY OR COMPLETENESS OF ELECTRONIC COPIES OF THIS PLAN SHEET.

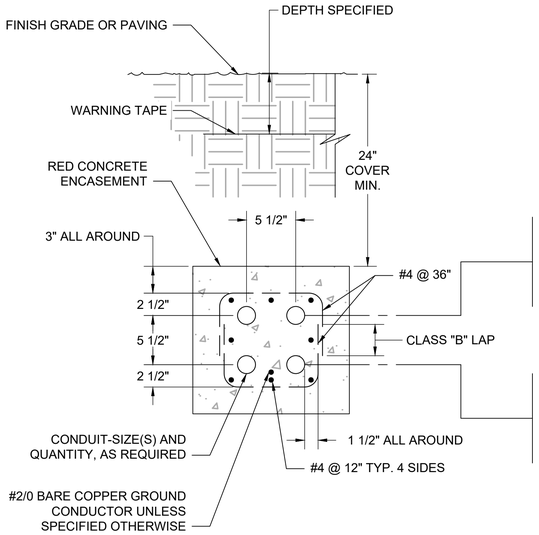

NOTES:

1. ALL DIMENSIONS SHOWN ARE MINIMUM UNLESS SPECIFIED OTHERWISE.
2. THIS ENCASEMENT FOR ALL AREAS NOT UNDER CONCRETE FLOORS AND SLABS.
3. P SUBSCRIPT ELECTRICAL POWER OR CONTROL CONDUIT.
4. C SUBSCRIPT COMMUNICATION (TELEPHONE, DATA, INSTRUMENTATION) CONDUIT.
5. X SUBSCRIPT SPARE CONDUIT.

P8.2	S1.1.0	
C2.1.1	2" (SPARE)	

DUCT BANK SECTION — E-28

NTS

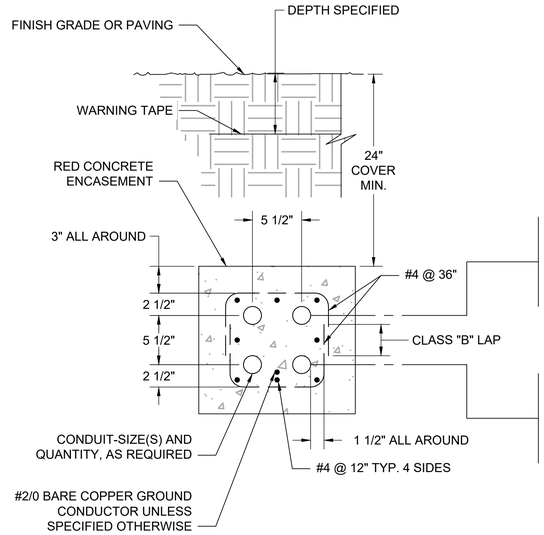

NOTES:

1. ALL DIMENSIONS SHOWN ARE MINIMUM UNLESS SPECIFIED OTHERWISE.
2. THIS ENCASEMENT FOR ALL AREAS NOT UNDER CONCRETE FLOORS AND SLABS.
3. P SUBSCRIPT ELECTRICAL POWER OR CONTROL CONDUIT.
4. C SUBSCRIPT COMMUNICATION (TELEPHONE, DATA, INSTRUMENTATION) CONDUIT.
5. X SUBSCRIPT SPARE CONDUIT.

P8.3	S1.1.2	
C2.1.2	2" (SPARE)	

DUCT BANK SECTION — E-29

NTS

ProjectLine
Technical Services, Inc

carollo

ENGINEERING
CITY OF LOS ANGELES
Environmental Engineering Division

THIS PLAN WAS ELECTRONICALLY SIGNED AND STAMPED

REGISTERED PROFESSIONAL ENGINEER ROBERT D. GETTER No. E 21884 Exp. 06-30-27 ELECTRICAL ENGINEER CIVIL ENGINEER STRUCTURAL ENGINEER

BUREAU OF ENGINEERING

VERTICAL CONTROL:
HORIZONTAL CONTROL:

SHEET TITLE: ELECTRICAL DETAILS SHEET 7
PROJECT: MACARTHUR LAKE STORMWATER CAPTURE PROJECT
ADDRESS: MACARTHUR PARK 2230 6TH ST LOS ANGELES CA 90057

DEPARTMENT OF PUBLIC WORKS

NO.	REVISIONS	DATE	BY

CIP NO. 1920R004

INDEX NO. D-XXXXX

CITY OF LOS ANGELES

	DESIGN GROUP	DATE
ENGINEER:	ROBERT GETTER	01/22/2026
ARCHITECT:		
DESIGNED BY:	HENRY LUONG	01/22/2026
DRAWN BY:	CHARLEY KHUU / PAVEL PETIN	01/22/2026
CHECKED BY:	ROBERT GETTER ROBERT MORRONI	01/22/2026
APPROVED BY:	ROBERT GETTER	01/22/2026

WORK ORDER
S33WMLRP, S043MSWC, S343MSWC

SHEET NAME
EP020

SHEET 98 OF 108 SHEETS

REVISION DATES (DESIGN STAGE ONLY)

FINAL DESIGN SUBMITTAL

SIGNALS

CONDUIT ID	CONDUIT SIZE	CABLES/CONDUCTORS	INSULATION	OPERATING VOLTAGE	FROM	TO	REMARK
S1.0.0	3"	3 - MANUFACTURE CABLE	-	24 VDC	(N) LCP-01/PLC-01 AT (FIT-101, FIT-303, FIT-505)	MANHOLE, MH-01	FLOW ELEMENT, (FE-101, FE-303, FE-505)
-	-	6-2TSP#14 OAS	-	24 VDC	(N) LCP-01/PLC-01 AT (PIT-111)	MANHOLE, MH-01	PRESSURE INDICATOR, (PIT-111) CHECK VALVE STATUS, (ZSC-101, ZSC-102, ZSC-103)
-	-	1 - MANUFACTURE CABLE	-	24 VDC	(N) LCP-01/PLC-01 AT (LIT-101)	MANHOLE, MH-01	LEVEL SENSING, (LE-101)
S1.0.1	2"	1 - MANUFACTURE CABLE	-	24 VDC	MANHOLE, MH-01	HANDHOLE, HH-03	FLOW ELEMENT FE-505
S1.0.2	2"	2 - MANUFACTURE CABLE	-	24 VDC	MANHOLE, MH-01	HANDHOLE, HH-02	FLOW ELEMENT, FE-101, FE-303
-	-	6-2TSP#14 OAS	-	24 VDC	MANHOLE, MH-01	HANDHOLE, HH-02	PRESSURE INDICATOR, (PIT-111) CHECK VALVE STATUS, (ZSC-101, ZSC-102, ZSC-103)
-	-	1 - MANUFACTURE CABLE	-	24 VDC	MANHOLE, MH-01	HANDHOLE, HH-02	LEVEL SENSING, (LE-101)
S1.1.0	2"	1 - MANUFACTURE CABLE	-	24 VDC	HANDHOLE, HH-03	HANDHOLE, HH-04	FLOW ELEMENT, FE-505
S1.1.2	2"	1 - MANUFACTURE CABLE	-	24 VDC	HANDHOLE, HH-04	HANDHOLE, HH-05	FLOW ELEMENT, FE-505
S1.1.5	2"	1 - MANUFACTURE CABLE	-	24 VDC	HANDHOLE, HH-05	TERMINAL BOX, TB-CS3	FLOW ELEMENT, FE-505
S1.1.6	1"	1 - MANUFACTURE CABLE	-	24 VDC	TERMINAL BOX, TB-CS3	FLOW ELEMENT, FE-505	FLOW ELEMENT, FE-505
S2.1.0	1"	1 - MANUFACTURE CABLE	-	24 VDC	MANHOLE, MH-01	FLOW ELEMENT, FE-303	FLOW ELEMENT, FE-303
S2.1.1	1"	1 - MANUFACTURE CABLE	-	24 VDC	TERMINAL BOX, TB-CS2.1	FLOW ELEMENT, FE-303	FLOW ELEMENT, FE-303
S4.0.0	1"	1 - MANUFACTURE CABLE	-	24 VDC	HANDHOLE, HH-02	TERMINAL BOX, TB-CS3	LEVEL SENSING, (LE-101)
S4.1.0	1"	1 - MANUFACTURE CABLE	-	24 VDC	TERMINAL BOX, TB-CS3	LEVEL SENSING, (LE-101)	LEVEL SENSING, (LE-101)
S5.0.0	2"	6-2TSP#14 OAS	-	24 VDC	HANDHOLE, HH-02	MANHOLE, MH-01	PRESSURE INDICATOR, (PIT-111) CHECK VALVE STATUS, (ZSC-101, ZSC-102, ZSC-103)
-	-	1 - MANUFACTURE CABLE	-	24 VDC	MANHOLE, MH-01	TERMINAL BOX, TB-S3	FLOW ELEMENT, FE-101
S5.1.0	1"	1 - MANUFACTURE CABLE	-	24 VDC	TERMINAL BOX, TB-S3	FLOW ELEMENT, FE-101	FLOW ELEMENT, FE-101
S5.2.0	1"	1-2TSP#14 OAS	-	24 VDC	TERMINAL BOX, TB-S3	PRESSURE INDICATOR, PIT-111	PRESSURE INDICATOR, PIT-111
S6.0.0	1"	1 - MANUFACTURE CABLE	-	24 VDC	(N) LCP-01/PLC-01 AT (LIT-102)	TERMINAL BOX, TB-S4	LEVEL SENSING, (LE-102)
S6.1.0	1"	1 - MANUFACTURE CABLE	-	24 VDC	TERMINAL BOX, TB-S4	LEVEL SENSING, (LE-102)	LEVEL SENSING, (LE-102)
S7.0.0	1"	2-1TSP#14, 1-1TSP#14 OAS	-	24 VDC	PUMP 102 VFD AT MCC-MP2A	(N) LCP-01/PLC-01 AT	SPEED SIGNALS PUMP 102
S8.0.0	1"	2-1TSP#14, 1-1TSP#14 OAS	-	24 VDC	PUMP 103 VFD AT MCC-MP2B	(N) LCP-01/PLC-01 AT	SPEED SIGNALS PUMP 103
S9.0.0	1"	1-2TSP#14 OAS	-	24 VDC	PUMP 103 VFD AT MCC-MP2B	(N) LCP-01/PLC-01 AT	CHECK VALVE STATUS, ZSC-101
S10.0.0	1"	1-2TSP#14 OAS	-	24 VDC	PUMP 103 VFD AT MCC-MP2B	(N) LCP-01/PLC-01 AT	CHECK VALVE STATUS, ZSC-102
S11.0.0	1"	1-2TSP#14 OAS	-	24 VDC	PUMP 103 VFD AT MCC-MP2B	(N) LCP-01/PLC-01 AT	CHECK VALVE STATUS, ZSC-103

CONTROLS

CONDUIT ID	CONDUIT SIZE	CABLES/CONDUCTORS	INSULATION	OPERATING VOLTAGE	FROM	TO	REMARK
C1.0.0	2"	2-12C#14,1#14GND	THHN-THWN	120VAC	MCC-MP2A (MOV-220,MOV-330)	(N) LCP-01/PLC-01	MOV-220, MOV-330 (OP CMD, CL CMD, OP/CL/REM STATUS)
C1.1.0	1.5"	28-1C#14, 1#14 GND	THHN-THWN	120VAC	PUMP 102 VFD AT MCC-MP2A	(N) LCP-01/PLC-01	PUMP 102 CONTROL
C1.2.0	1.5"	28-1C#14, 1#14 GND	THHN-THWN	120VAC	PUMP 103 VFD AT MCC-MP2B	(N) LCP-01/PLC-01	PUMP 103 CONTROL
C1.3.0	1"	1-7C#14, 1#14GND	THHN-THWN	120 VAC	PUMP 101 STARTER AT MCC-MP2B	(N) LCP-01/PLC-01	PUMP 101 CONTROL
C1.4.0	2"	2-12C#14,1#14GND	THHN-THWN	120VAC	MCC-MP2B(MOV-010, MOV-303)	(N) LCP-01/PLC-01	MOV-010, MOV-303 (OP CMD, CL CMD, OP/CL/REM STATUS)
C2.0.0	4"	4-12C#14,1#14GND	THHN-THWN	120 VAC	MCC-MP2A (MOV-220,MOV-330) MCC-MP2B (MOV-010, MOV-303)	MANHOLE, MH-01	MOV-010, MOV-303, MOV-220, MOV-330 (OP CMD, CL CMD, OP/CL/REM STATUS)
C2.1.0	2"	1-12C#14,1#14GND	THHN-THWN	120 VAC	MANHOLE, MH-01	HANDHOLE, HH-03	MOV-220 (OP CMD, CL CMD, OP/CL/REM STATUS)
C2.1.1	2"	1-12C#14,1#14GND	THHN-THWN	120 VAC	HANDHOLE, HH-03	HANDHOLE, HH-04	MOV-220 (OP CMD, CL CMD, OP/CL/REM STATUS)
C2.1.2	2"	1-12C#14,1#14GND	THHN-THWN	120 VAC	HANDHOLE, HH-04	HANDHOLE, HH-05	MOV-220 (OP CMD, CL CMD, OP/CL/REM STATUS)
C2.1.3	2"	1-12C#14,1#14GND	THHN-THWN	120 VAC	HANDHOLE, HH-05	TERMINAL BOX, TB-PC2	MOV-220 (OP CMD, CL CMD, OP/CL/REM STATUS)
C2.1.4	-	1-12C#14,1#14GND	THHN-THWN	120 VAC	TERMINAL BOX, TB-PC2	MOV-220	MOV-220 (OP CMD, CL CMD, OP/CL/REM STATUS)
C2.2.0	2"	1-12C#14,1#14GND	THHN-THWN	120 VAC	MANHOLE, MH-01	TERMINAL BOX, TB-PC3	MOV-330 (OP CMD, CL CMD, OP/CL/REM STATUS)
C2.2.1	-	1-12C#14,1#14GND	THHN-THWN	120 VAC	TERMINAL BOX, TB-PC3	MOV-330	MOV-330 (OP CMD, CL CMD, OP/CL/REM STATUS)
C2.3.0	2"	1-12C#14,1#14GND	THHN-THWN	120 VAC	MANHOLE, MH-01	TERMINAL BOX, TB-PC4	MOV-010 (OP CMD, CL CMD, OP/CL/REM STATUS)
C2.3.1	-	1-12C#14,1#14GND	THHN-THWN	120 VAC	TERMINAL BOX, TB-PC4	MOV-010	MOV-010 (OP CMD, CL CMD, OP/CL/REM STATUS)
C2.4.0	2"	1-12C#14,1#14GND	THHN-THWN	120 VAC	MANHOLE, MH-01	TERMINAL BOX, TB-PC5	MOV-303 (OP CMD, CL CMD, OP/CL/REM STATUS)
C2.4.1	-	1-12C#14,1#14GND	THHN-THWN	120 VAC	TERMINAL BOX, TB-PC5	MOV-303	MOV-303 (OP CMD, CL CMD, OP/CL/REM STATUS)
C3.0.0	2"	1-7C#14, 1#14GND	THHN-THWN	24 VDC	(N) MCC-MP2A AT (PUMP 102 VFD)	MANHOLE, MH-01	PUMP 102 LEAK/WINDING TEMP
C3.0.1	2"	2-7C#14, 1#14GND	THHN-THWN	24 VDC	(N) MCC-MP2B AT (PUMP 102 VFD, PUMP 101 STARTER)	MANHOLE, MH-01	PUMP 101/103 LEAK/WINDING TEMP
C3.1.0	2"	3-7C#14, 1#14GND	THHN-THWN	24 VDC	MANHOLE, MH-01	HANDHOLE, HH-02	PUMP 101/102/103 LEAK/WINDING TEMP
C3.2.0	2"	3-7C#14, 1#14GND	THHN-THWN	24 VDC	HANDHOLE, HH-02	TERMINAL BOX, TB-CS3	PUMP 101/102/103 LEAK/WINDING TEMP
C3.2.1	-	MANUFACTURE CABLE	-	24 VDC	TERMINAL BOX, TB-CS3	PUMP 101	PUMP 101 LEAK/WINDING TEMP
C3.2.2	-	MANUFACTURE CABLE	-	24 VDC	TERMINAL BOX, TB-CS3	PUMP 102	PUMP 102 LEAK/WINDING TEMP
C3.2.3	-	MANUFACTURE CABLE	-	24 VDC	TERMINAL BOX, TB-CS3	PUMP 103	PUMP 103 LEAK/WINDING TEMP
C4.0.0	2"	1-7C#14, 1#14GND	THHN-THWN	120VAC	(N) PLC-01	MANHOLE, MH-01	FLOATS CONTROL INTRINSICALLY SAFE CKT.
C4.1.0	2"	1-7C#14, 1#14GND	THHN-THWN	120VAC	MANHOLE, MH-01	HANDHOLE, HH-02	FLOATS CONTROL INTRINSICALLY SAFE CKT.
C4.2.0	2"	1-7C#14, 1#14GND	THHN-THWN	120VAC	HANDHOLE, HH-02	TERMINAL BOX, TB-C3	FLOATS CONTROL INTRINSICALLY SAFE CKT.
C4.3.0	-	MANUFACTURE CABLE	-	120VAC	TERMINAL BOX, TB-C3	FLOATS (LSLL-101A, LSL-102A, LSH-103A, LSHH-103A)	FLOATS CONTROL INTRINSICALLY SAFE CKT.
C5.0.0	1"	1-7C#14, 1#14GND	THHN-THWN	120 VAC	PUMP 104 START AT (E) MCC-MP	(N) LCP-01 / PLC-01	PUMP 104 CONTROL
C6.0.0	1"	1-2C#14, 1#14GND	THHN-THWN	120 VAC	(E) LAKE FILL CONTROL PANEL-CR14 N.O. CONTACT	(N) LCP-01 / PLC-01	INITIATE STORM MODE, DISABLE LAKE FILL CONTROL PANEL
C7.0.0	2"	1-7C#14, 1#14GND	THHN-THWN	120 VAC	(N) PLC-01	MANHOLE, MH-01	SLIDE GATE CONTROL INTRINSICALLY SAFE CKT.
C7.1.0	2"	1-7C#14, 1#14GND	THHN-THWN	120 VAC	MANHOLE, MH-01	HANDHOLE, HH-02	SLIDE GATE CONTROL INTRINSICALLY SAFE CKT.
C7.2.0	2"	1-7C#14, 1#14GND	THHN-THWN	120 VAC	HANDHOLE, HH-02	TERMINAL BOX, TB-PC1	SLIDE GATE CONTROL INTRINSICALLY SAFE CKT.
C7.2.1	-	MANUFACTURE CABLE	-	120 VAC	TERMINAL BOX, TB-PC1	SLIDE GATE (HS-101B, HS-010A, ZSO-010A, YA-010)	SLIDE GATE CONTROL INTRINSICALLY SAFE CKT.

POWER

CONDUIT ID	CONDUIT SIZE	CABLES/CONDUCTORS	INSULATION	OPERATING VOLTAGE	FROM	TO	REMARK
P1.0	3"	3#350KCMIL, 1#4GND	THHN/THWN	480VAC	(E) MSA	(N) MCC-MP2A	
P1.1	3"	3#350KCMIL, 1#4GND	THHN/THWN	480VAC	(N) MCC-MP2A	(N) MCC-MP2B	MCC SUB-FEED
P2.0	3/4"	4#10, 1#10GND	THHN/THWN	120VAC	(N) DP-1	(N) LCP-01/PLC-01	LOCAL CONTROL PANEL POWER
P2.1	1"	10#12, 1#12GND	THHN/THWN	120VAC	(N) DP-1	FIT-101, FIT-303, FIT-505	FIT-101, FIT-303, FIT-505 POWER
P3.0	2"	3#1, 1#6GND	VFD CABLES	480VAC	(N) MCC-MP2A	MANHOLE, MH-01	PUMP 102 POWER
P3.1	2"	3#1, 1#6GND	VFD CABLES	480VAC	MANHOLE, MH-01	HANDHOLE, HH-02	PUMP 102 POWER
P3.2	2"	3#1, 1#6GND	VFD CABLES	480VAC	HANDHOLE, HH-02	TERMINAL BOX, TB-P1	PUMP 102 POWER
P3.3	-	MANUFACTURER CABLE	-	480VAC	TERMINAL BOX, TB-P1	PUMP 102	PUMP 102 POWER
P4.0	2"	3#1, 1#6GND	VFD CABLES	480VAC	(N) MCC-MP2B	MANHOLE, MH-01	PUMP 103 POWER
P4.1	2"	3#1, 1#6GND	VFD CABLES	480VAC	MANHOLE, MH-01	HANDHOLE, HH-02	PUMP 103 POWER
P4.2	2"	3#1, 1#6GND	VFD CABLES	480VAC	HANDHOLE, HH-02	TERMINAL BOX, TB-P1	PUMP 103 POWER
P4.3	-	MANUFACTURER CABLE	-	480VAC	TERMINAL BOX, TB-P1	PUMP 103	PUMP 103 POWER
P5.0	2"	3#10, 1#10GND	THHN/THWN	480VAC	(N) MCC-MP2B	MANHOLE, MH-01	PUMP 101 POWER
P5.1	2"	3#10, 1#10GND	THHN/THWN	480VAC	MANHOLE, MH-01	HANDHOLE, HH-02	PUMP 101 POWER
P5.2	2"	3#10, 1#10GND	THHN/THWN	480VAC	HANDHOLE, HH-02	TERMINAL BOX, TB-P1	PUMP 101 POWER
P5.3	-	MANUFACTURER CABLE	-	480VAC	TERMINAL BOX, TB-P1	PUMP 103	PUMP 101 POWER
P7.0.0	3/4"	3#10, 1#10GND	THHN/THWN	480VAC	(N) MCC-MP2B	MANHOLE, MH-01	SLIDE GATE SLG-1 POWER
P7.1.0	3/4"	3#10, 1#10GND	THHN/THWN	480VAC	MANHOLE, MH-01	HANDHOLE, HH-02	SLIDE GATE SLG-1 POWER
P.7.2.0	3/4"	3#10, 1#10GND	THHN/THWN	480VAC	HANDHOLE, HH-02	TERMINAL BOX, TB-PC1	SLIDE GATE SLG-1 POWER
P.7.2.1	3/4"	MANUFACTURER CABLE	-	480VAC	TERMINAL BOX, TB-PC1	SLIDE GATE SLG-1	SLIDE GATE SLG-1 POWER
P8.0	2"	3#10, 1#10GND	THHN/THWN	480VAC	(N) MCC-MP2A	MANHOLE, MH-01	MOTORIZED VALVE MOV-220 POWER
P8.1	2"	3#10, 1#10GND	THHN/THWN	480VAC	MANHOLE, MH-01	HANDHOLE, HH-03	MOTORIZED VALVE MOV-220 POWER
P8.2	2"	3#10, 1#10GND	THHN/THWN	480VAC	HANDHOLE, HH-03	HANDHOLE, HH-04	MOTORIZED VALVE MOV-220 POWER
P8.3	2"	3#10, 1#10GND	THHN/THWN	480VAC	HANDHOLE, HH-04	HANDHOLE, HH-05	MOTORIZED VALVE MOV-220 POWER
P8.4	2"	3#10, 1#10GND	THHN/THWN	480VAC	HANDHOLE, HH-05	TERMINAL BOX, TB-PC2	MOTORIZED VALVE MOV-220 POWER
P8.5	-	3#10, 1#10GND	THHN/THWN	480VAC	TERMINAL BOX, TB-PC2	MOV-220	MOTORIZED VALVE MOV-220 POWER
P9.0	2"	3#10, 1#10GND	THHN/THWN	480VAC	(N) MCC-MP2A	MANHOLE, MH-01	MOTORIZED VALVE MOV-330 POWER
P9.1	2"	3#10, 1#10GND	THHN/THWN	480VAC	MANHOLE, MH-01	TERMINAL BOX, TB-PC3	MOTORIZED VALVE MOV-330 POWER
P9.2	-	3#10, 1#10GND	THHN/THWN	480VAC	TERMINAL BOX, TB-PC3	MOV-330	MOTORIZED VALVE MOV-330 POWER
P10.0	2"	3#10, 1#10GND	THHN/THWN	480VAC	(N) MCC-MP2A	MANHOLE, MH-01	MOTORIZED VALVE MOV-010 POWER
P10.1	2"	3#10, 1#10GND	THHN/THWN	480VAC	MANHOLE, MH-01	TERMINAL BOX, TB-PC4	MOTORIZED VALVE MOV-010 POWER
P10.2	-	3#10, 1#10GND	THHN/THWN	480VAC	TERMINAL BOX, TB-PC4	MOV-010	MOTORIZED VALVE MOV-010 POWER
P11.0	2"	3#10, 1#10GND	THHN/THWN	480VAC	(N) MCC-MP2B	MANHOLE, MH-01	MOTORIZED VALVE MOV-303 POWER
P11.1	2"	3#10, 1#10GND	THHN/THWN	480VAC	MANHOLE, MH-01	TERMINAL BOX, TB-PC5	MOTORIZED VALVE MOV-303 POWER
P11.2	-	3#10, 1#10GND	THHN/THWN	480VAC	TERMINAL BOX, TB-PC5	MOV-303	MOTORIZED VALVE MOV-303 POWER

SPARE

CONDUIT ID	CONDUIT SIZE	CABLES/CONDUCTORS	INSULATION	OPERATING VOLTAGE	FROM	TO	REMARK
X1	2"	PULLSTRING	-	-	MCC-MP2A	MANHOLE, MH-01	-
X2	2"	PULLSTRING	-	-	MCC-MP2B	MANHOLE, MH-01	-
X3	2"	PULLSTRING	-	-	LCP-01/PLC-01	MANHOLE, MH-01	-
X4	2"	PULLSTRING	-	-	LCP-01/PLC-01	MANHOLE, MH-01	-

THE CITY OF LOS ANGELES OR ITS OFFICERS OR AGENT'S SHALL NOT BE RESPONSIBLE FOR THE ACCURACY OR COMPLETENESS OF ELECTRONIC COPIES OF THIS PLAN SHEET.

REVISION DATES (DESIGN STAGE ONLY)

ENGINEERING
CITY OF LOS ANGELES
Environmental Engineering Division

THIS PLAN WAS ELECTRONICALLY SIGNED AND STAMPED

REGISTERED PROFESSIONAL ENGINEER ROBERT D. GETTER No. E 21884 Exp. 06-30-27 CIVIL

BUREAU OF ENGINEERING
VERTICAL CONTROL:
HORIZONTAL CONTROL:
SHEET TITLE: CONDUIT & CABLE SCHEDULE
PROJECT: MACARTHUR LAKE STORMWATER CAPTURE PROJECT
ADDRESS: MACARTHUR PARK 2230 6TH ST LOS ANGELES CA 90057

DEPARTMENT OF PUBLIC WORKS
CITY OF LOS ANGELES

NO	REVISIONS	DATE	BY

CIP NO. 1920R004
INDEX NO. D-XXXXX

	DESIGN GROUP	DATE
ENGINEER:	ROBERT GETTER	01/22/2026
ARCHITECT:		
DESIGNED BY:	HENRY LUONG	01/22/2026
DRAWN BY:	CHARLEY KHUU / PAVEL PETIN	01/22/2026
CHECKED BY:	ROBERT GETTER ROBERT MORRONI	01/22/2026
APPROVED BY:	ROBERT GETTER	01/22/2026

ProjectLine
Technical Services, Inc

carollo

WORK ORDER
S33WMLRP, S043MSWC, S343MSWC

SHEET NAME
EP021
SHEET 99 OF 108 SHEETS

FINAL DESIGN SUBMITTAL

INSTRUMENTATION CALL - OUT

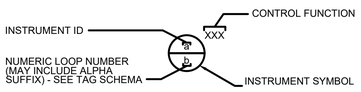

INSTRUMENT SYMBOLS

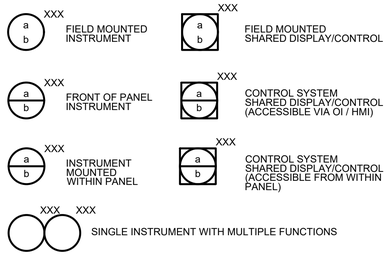

a INSTRUMENT IDENTIFICATION/TAG NUMBER (SEE MODIFIED ISA TABLE FOR MORE INFO)

b INSTRUMENT LOOP NUMBER

XXX CONTROL FUNCTION

XXXV PRIMARY ELECTRICAL POWER (e.g. 24VDC, 120VAC, 220VAC, 480VAC)

NOTE1: IF INSTRUMENT POWER NOT INDICATED, REFER TO INSTRUMENT SCHEDULE FOR CONFIRMATION.

* REFER TO PROJECT CONTROL PHILOSOPHY FOR DETAILS.

CONTROL FUNCTION DESIGNATIONS

AHC	AUTO / HOLD / CLOSE	OLH	OFF / LOW / HIGH
AM	AUTO / MANUAL	O/O	ON / OFF
AS	AIR SUPPLY	O/R	OVERRIDE
BEAR	BEARING	OOR	OUT OF RANGE
CLSD	CLOSED	OSC	OPEN / STOP / CLOSE
CV	CONTROL VARIABLE	PID	PROPORTIONAL / INTEGRAL / DERIVATIVE
DEV	DEVIATION	POT	POTENTIOMETER
E-STOP	EMERGENCY STOP	PV	PROCESS VARIABLE
ETM	ELAPSED TIME METER	RDY	READY
FOR	FORWARD / OFF / REVERSE	R/L	RAISE / LOWER
HML	HIGH / MID / LOW	RSL	RAISE / STOP / LOWER
HOA	HAND / OFF / AUTO	RST	RESET
HOR	HAND / OFF / REMOTE	RTD	RESISTANCE TEMPERATURE DETECTOR
LEAK	MOISTURE INTRUSION	SD	SHUTDOWN
LOR	LOCAL / OFF / REMOTE	SEL	SELECT
L/R	LOCAL / REMOTE	SP	SET POINT
LSR	LOCAL / STOP / REMOTE	S/R	START / RESET
MOA	MANUAL / OFF / AUTO	S/S	START / STOP
MN	MAINTENANCE / NORMAL	STR	START
O/C	OPEN / CLOSE	STP	STOP
OCA	OPEN / CLOSE / AUTO	TMR	TIMER
OL	OVERLOAD	WIND	WINDING

NOTE:

1. REFER TO DRAWING GI-2 FOR ANALYTICAL INSTRUMENT DESIGNATIONS.

INSTRUMENT SYMBOLS - CONT

COMPUTING OR CONVERTING FUNCTIONS

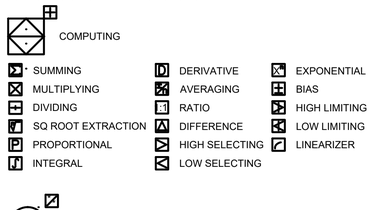

E	VOLTAGE	R	RESISTANCE (ELECT)	A	ANALOG
I	CURRENT	D	DIGITAL	B	BINARY
P	PNEUMATIC			H	HYDRAULIC

PLC / REMOTE I/O POINTS

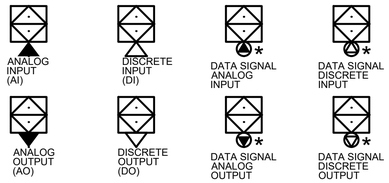

* FIELD NETWORK INTERFACE SEE SPECIFICATION FOR MORE INFORMATION

INSTRUMENTATION LINE SYMBOLOGY



INSTRUMENT LINE DEFINITIONS (UNLESS SPECIFICALLY NOTED OTHERWISE PER DRAWING LEGEND)

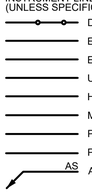

COMMUNICATION LINE DEFINITIONS (UNLESS SPECIFICALLY NOTED OTHERWISE PER DRAWING LEGEND)

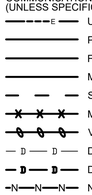

SIGNAL AND PROCESS OFF-PAGE CONNECTORS

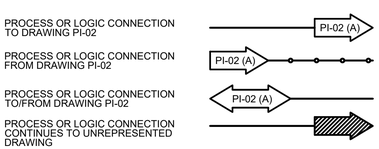

NOTE: REFER TO INSTRUMENTATION LINE SYMBOLOGY FOR PROCESS AND LOGIC LINESTYLE DEFINITION.

ISA TABLE (MODIFIED)

	FIRST LETTER		SUCCEEDING LETTER(S)		
	MEASURED OR INITIATING VARIABLE	MODIFIER	READOUT OR PASSIVE FUNCTION	OUTPUT FUNCTION	MODIFIER
A	ANALYSIS		ALARM		
B	BURNER, COMBUSTION				
C	CONDUCTIVITY			CONTROL	CLOSED
D	DENSITY	DIFFERENTIAL			
E	VOLTAGE		SENSOR (PRIMARY ELEMENT)		
F	FLOW RATE	RATIO (FRACTION)			FORWARD
G			GAUGE, GLASS, VIEWING DEVICE		
H	HAND				HIGH
I	CURRENT (ELECTRICAL)		INDICATE		
J	POWER	SCAN			
K	TIME, TIME SCHEDULE	TIME RATE OF CHANGE		CONTROL STATION	
L	LEVEL		LIGHT		LOW
M	MOISTURE	MOMENTARY			MIDDLE, INTERMEDIATE
N	TORQUE		ISOLATE	ISOLATOR	
O			ORIFICE, RESTRICTION		OPEN
P	PRESSURE, VACUUM		POINT (TEST) CONNECTION		
Q	QUANTITY	INTEGRATE, TOTALIZE			
R	RADIATION		RECORD		REVERSE
S	SPEED, FREQUENCY	SAFETY		SWITCH	
T	TEMPERATURE			TRANSMIT	
U	MULTIVARIABLE		MULTIFUNCTION	MULTIFUNCTION	MULTIFUNCTION
V	VIBRATION, MECHANICAL ANALYSIS			VALVE, DAMPER, LOUVER	
W	WEIGHT, FORCE		WELL		
X	INTRUSION	X AXIS			
Y	EVENT, STATE, OR PRESENCE	Y AXIS		COMPUTE, CONVERT	
Z	POSITION, DIMENSION	Z AXIS		DRIVER, ACTUATOR, FINAL CONTROL ELEMENT	

TAG SCHEMA

TYPICAL INSTRUMENT & CONTROL VALVE TAGGING

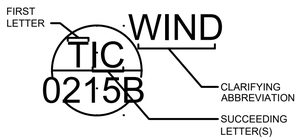

TYPICAL PIPE LINE TAG FORMAT

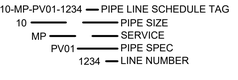

TYPICAL VALVE TAG / SPEC FORMAT

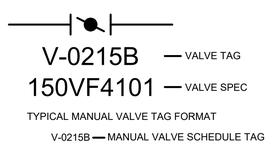

TYPICAL MANUAL VALVE TAG FORMAT

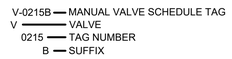

VALVE SPECIFICATION TAG FORMAT

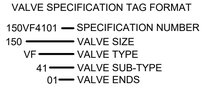

ANALYTICAL INSTRUMENTS

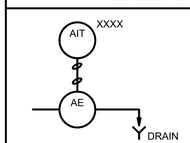

FLOW THROUGH ANALYZING ELEMENT WITH REMOTE TRANSMITTER

ALK	ALKALINITY	LEL	LOWER EXPLOSIVE LIMIT
CL_2	CHLORINE CONCENTRATION	NO_3 / NO_2	NITRATE / NITRITE
COMB	COMBUSTIBLE GAS	NH_3 / NH_4	AMMONIA / AMMONIUM
COND	CONDUCTIVITY	O_2	OXYGEN CONCENTRATION
DO	DISSOLVED OXYGEN	O_3	OZONE
TEMP	TEMPERATURE	ORP	OXIDATION - REDUCTION POTENTIAL
NH_2CL	MONO-CHLORAMINE	PC	PARTICLE COUNTER
		pH	HYDROGEN ION CONCENTRATION
		SCU	STREAMING CURRENT UNIT
		SO_2	SULFUR DIOXIDE
		TKN	TOTAL KJELDAHL NITROGEN
		TN	TOTAL NITROGEN
		TOC	TOTAL ORGANIC CARBON
		TURB	TURBIDITY
		TSS	TOTAL SUSPENDED SOLIDS
		UVI	ULTRA VIOLET INTENSITY
		UVT	ULTRA VIOLET TRANSMITTANCE

ABBREVIATIONS

ATM	ATMOSPHERE
APF	AWPF PROCESS FEED
ATC	AUTO TRANSFER CONTROLLER
CT	CONTACT TIME
CP	CONTROL PANEL
DCS	DISTRIBUTED CONTROL SYSTEM
DOL	DIRECT ONLINE STARTER
DR	DRAIN
FC	FAIL CLOSED
FOC	FIBER OPTIC CABLE
FOT	FIBER OPTIC TRANSCEIVER
FVNR	FULL VOLTAGE NON-REVERSING STARTER
HMI	HUMAN MACHINE INTERFACE
LC	LOCKED CLOSED
LCP	LOCAL CONTROL PANEL
LCS	LOCAL CONTROL STATION
LO	LOCKED OPEN
LSA	LIGHTNING SURGE ARRESTOR
MCC	MOTOR CONTROL CENTER
MCP	MAIN CONTROL PANEL
MFAS	MF AIR SCOUR
MFBWS	MF BACKWASH SUPPLY
MFBWW	MF BACKWASH WASTE
MFCIPR	MF CIP RETURN
MFCIPS	MF CIP SUPPLY
MFF	MF FILTRATE
MFS	MF SUPPLY
MMF	MULTIMODE FIBER
MS	MOTOR STARTER
MTR	MOTOR
MK##	MARK (MECH DETAIL REFERENCE)
N/A	NOT APPLICABLE
NC	NORMALLY CLOSED
NIC	NOT IN CONTRACT
NO	NORMALLY OPEN
OI	OPERATOR INTERFACE
OIT	OPERATOR INTERFACE TERMINAL
PC	PERSONAL COMPUTER
PLC	PROGRAMMABLE LOGIC CONTROLLER
PCN	PLANT CONTROL NETWORK
PDU	POWER DISTRIBUTION UNIT
PW	PRODUCT WATER
RIO	REMOTE I/O
ROCIPF	RO CIP FEED
ROCIPP	RO CIP PERMEATE RETURN
ROCIPR	RO CIP RETURN
ROF	RO FEED
ROFL	RO FLUSH SUPPLY
ROI	RO INTERSTAGE
RVSS	REDUCED VOLTAGE SOLID-STATE STARTER
RTU	REMOTE TERMINAL UNIT
SAM	SAMPLE
SBWW	STRAINER BACKWASH WASTE
SCADA	SUPERVISORY CONTROL AND DATA ACQUISITION
SMF	SINGLE MODE FIBER
SSM	SOLID STATE METER
STP	SHIELDED TWISTED PAIR
TC	THERMOCOUPLE
UPS	UNINTERRUPTABLE POWER SUPPLY
UTP	UNSHIELDED TWISTED PAIR
UVE	UV EFFLUENT
UVF	UV FEED
VCP	VENDOR CONTROL PANEL
VFD	VARIABLE FREQUENCY DRIVE
VSD	VARIABLE SPEED DRIVE

ENGINEERING
CITY OF LOS ANGELES
Environmental Engineering Division

THIS PLAN WAS ELECTRONICALLY SIGNED AND STAMPED

PROFESSIONAL ENGINEER * REGISTERED * ROBERT D. GETTER * No. E 21584 * Exp. 06-30-27 * CIVIL * STATE OF CALIFORNIA

BUREAU OF ENGINEERING
VERTICAL CONTROL:
HORIZONTAL CONTROL:
SHEET TITLE: INSTRUMENTATION SYMBOLS & ABBREVIATIONS
PROJECT: MACARTHUR LAKE STORMWATER CAPTURE PROJECT
ADDRESS: MACARTHUR PARK 2230 6TH ST LOS ANGELES CA 90057

DEPARTMENT OF PUBLIC WORKS
CITY OF LOS ANGELES

NO	REVISIONS	DATE	BY

CIP NO. 1920R004
INDEX NO. D-XXXXX

	DESIGN GROUP	DATE
ENGINEER:	ROBERT GETTER	01/22/2026
ARCHITECT:		
DESIGNED BY:	HENRY LUONG	01/22/2026
DRAWN BY:	CHARLEY KHUU / PAVEL PETIN	01/22/2026
CHECKED BY:	ROBERT GETTER	01/22/2026
APPROVED BY:	ROBERT GETTER	01/22/2026
	ROBERT MORRONI	01/22/2026

ProjectLine Technical Services, Inc

carollo

WORK ORDER S33WMLRP, S043MSWC, S343MSWC

SHEET NAME IG001

SHEET 100 OF 108 SHEETS

REVISION DATES (DESIGN STAGE ONLY)

THE CITY OF LOS ANGELES OR ITS OFFICERS OR AGENTS SHALL NOT BE RESPONSIBLE FOR THE ACCURACY OR COMPLETENESS OF ELECTRONIC COPIES OF THIS PLAN SHEET.

SHEET VERSION 4.0.1 FILE PATH: C:\PW_WORKING\CAROLLO_200000\D0225953\203818IG001.DWG PLOT DATE: 1/15/2026 3:59 PM SAVED: 1/15/2026 3:51 PM SAVED BY:CHARLEY

FINAL DESIGN SUBMITTAL

PROCESS ABBREVIATIONS

ANTISCALANT	AS
AIR	A
AQUEOUS AMMONIA	AA
ALUM	AL
AIR VENT	AV
AUTOMATIC SPRINKLER RISER	ASR
BLEND	B
BIOLOGICALLY ACTIVATED CARBON	BAC
BAC AIR SCOUR	BACAS
BAC BACKWASH SUPPLY	BACBWS
BAC BACKWASH WASTE	BACBWW
BAC EFFLUENT	BACE
BAC FEED	BACF
BYPASS	BP
BACKWASH WATER	BW
CONDENSATE	C
CALCIUM HYDROXIDE (HYDRATED LIME)	CAH
CALCIUM OXIDE (QUICK LIME)	CAO
CARBON SOURCE	CA
CHANNEL AGITATION WATER	CAW
CALCIUM CHLORIDE	CC
MEMBRANE CLEANING CONCENTRATE RETURN	CCR
CHEMICAL DRAIN	CD
CONDENSER WATER RETURN	CDR
CONDENSER WATER SUPPLY	CDS
CHILLED WATER RETURN	CHR
CHILLED WATER SUPPLY	CHS
CHILLED WATER	CHW
CHEMICAL INHIBITOR SOL	CIS
CHLORINE GAS	CLG
CHLORINE LIQUID	CLL
CHLORINE SOLUTION	CLS
COAGULANT	COA
CAUSTIC SODA	CS
CHEMICAL CONTAINMENT	CP
CLEANING PERMEATE RETURN	CPR
CIRCULATED SLUDGE	CSL
CITRIC ACID	CTA
CHLORINATOR VENT AND DETECTION	CV
CHEMICAL VENT	CVT
CHEMICAL VENT THRU ROOF	CVTR
COAGULATED WATER	CW
COOLING WATER RETURN	CWR
COOLING WATER SUPPLY	CWS
DEFOAMING CHEMICAL	DC
DOMESTIC COLD WATER	DCW
DIESEL FUEL OIL	DFO
DISINFECTED MEMBRANE FILTRATE	DMF
DEIONIZED WATER	DI
DEMINERALIZED WATER	DMW
DECANT	DN
DRY POLYMER SOLUTION	DPOL
DRAIN	DR
DIGESTED SLUDGE	DSL
DOMESTIC HOT WATER RETURN	DWR
DOMESTIC HOT WATER SUPPLY	DWS
ENGINE EXHAUST	EE
ENGINE COOLING WATER RETURN	EWR
ENGINE COOLING WATER SUPPLY	EWS
FLUOROSILICIC ACID	FA
FILTER AIR WASH	FAW
FILTER BACKWASH	FBW
FINAL EFFLUENT	FE
FERRIC CHLORIDE	FC
FERRIC SULFATE	FES
FUEL GAS	FG
FILTER INFLUENT	FI
FORCE MAIN	FM
FIRE PROTECTION	FP
FROTH	FR
FROTH SPRAY	FS
FILTER SURFACE WASHWATER	FSW
FILTER TO WASTE	FTW
FILTERED WATER	FW
FILTER WASTE WASHWATER	FWW
GRIT	G
GRANULAR ACTIVATED CARBON	GAC
GAC BACKWASH SUPPLY	GACBWS
GAC CONTACTED WATER	GACCW
GAC BACKWASH WASTE	GACWW
GASEOUS OXYGEN	GOX
GRAY WATER	GW
HYDROCHLORIC ACID	HCA
HYDROGEN PEROXIDE	HP
HYDROFLUROSILICIC ACID	HFA
POTABLE HOT WATER	HW
HOT WATER RETURN	HWR
HOT WATER SUPPLY	HWS
INSTRUMENT AIR	IA
IRRIGATION WATER	IRW
LIQUID AMMONIA SULPHATE	LAS
LANDFILL GAS	LFG
LUBE OIL	LO
LIQUID OXYGEN	LOX
LIQUEFIED PETROLEUM	LP
LIQUEFIED PETROLEUM GAS	LPG
LIQUID POLYMER	LPOL
MEMBRANE BACKWASH WASTE	MBW
MEMBRANE CONCENTRATE	MC
MEMBRANE CLEANING RETURN	MCR
MEMBRANE CLEANING SUPPLY	MCS
MEMBRANE CLEANING WASTE	MCW
MECHANICAL DEWATERING POLYMER	MDP
MEMBRANE FILTRATION	MF
MEMBRANE FILTRATION AIR SCOUR	MFAS
MEMBRANE FILTRATION BACKWASH SUPPLY	MFBWS
MEMBRANE FILTRATION BACKWASH WASTE	MFBWW
MEMBRANE FILTRATION CLEAN-IN-PLACE RETURN	MFCIPR
MEMBRANE FILTRATION CLEAN-IN-PLACE SUPPLY	MFCIPS
MEMBRANE FILTRATION CLEANING WASTE	MFCW
MEMBRANE FILTRATION EFFLUENT	MFE
MEMBRANE FILTRATION FEED	MFF
METHANE GAS	MG
MIXED LIQUOR	ML
MIXED LIQUOR RECYCLE	MLR
MEMBRANE PERMEATE	MP
MAKE-UP WATER	MW
NITROGEN	N
NATURAL GAS	NG
OZONE CONTACTOR	OC
OVERFLOW	OF
OFFGAS	OG
OXIDATION TOWER EFFLUENT	OTE
OXYGEN (GAS)	OX
OZONE	OZ
PLANT AIR	PA
POWDERED ACTIVATED CARBON	PAC
POLYALUMINUM CHLORIDE	PCL
PHOSPHORIC ACID	PHA
PROCESS DRAIN	PD
PLANT DRAIN	PDR
PRIMARY EFFLUENT	PE
PLANT INFLUENT	PI
PLANT EFFLUENT	PLE
PLANT OVERFLOW	PO
ANIONIC POLYMER	POA
CATIONIC POLYMER	POC
FILTER AID POLYMER	POF
NONIONIC POLYMER	PON
THICKENER POLYMER	POT
PRESSURIZED RECYCLE	PRR
PRESSATE	PRS
PRODUCT WATER	PRW
POTASSIUM PERMANGANATE	PTP
POTABLE WATER	PW

PROCESS ABBREVIATIONS

RETURN ACTIVATED SLUDGE	RAS
REVERSE OSMOSIS CLEAN-IN-PLACE FEED	RCIPF
REVERSE OSMOSIS CLEAN-IN-PLACE PERMEATE	RCIPP
REVERSE OSMOSIS CLEAN-IN-PLACE RETURN	RCIPR
RECLAIMED WATER	REW
REFRIGERANT LIQUID	RFL
REFRIGERANT SUCTION	RFS
RO CONCENTRATE	ROC
REVERSE OSMOSIS FEED	ROF
REVERSE OSMOSIS FLUSH	ROFL
REVERSE OSMOSIS FLUSH WASTE	ROFW
REVERSE OSMOSIS INTERSTAGE	ROI
REVERSE OSMOSIS PERMEATE	ROP
RETURN SECONDARY SLUDGE	RSS
RAW WATER	RW
RAW WATER RETURN	RWR
RAW WATER SUPPLY	RWS
RECLAIMED WASHWATER	RWW
SULFURIC ACID	SA
SAMPLE LINE	SAM
SCUM	S
SCREENED EFFLUENT	SE
SCREENINGS	SC
SUBNATANT	SBN
SUBNATANT OVERFLOW	SBO
SANITARY DRAIN	SD
SODIUM BISULFITE	SDB
SODIUM HYDROXIDE (CAUSTIC SODA)	SDH
STORM DRAIN	SDR
SANITARY DRAIN VENT	SDV
SECONDARY EFFLUENT	SE
SLUDGE FILTRATE	SF
SULFURIC ACID	SFA
SOFT WATER	SFW
SLUDGE GAS	SG
SODIUM HYPOCHLORITE	SHC
SCALE INHIBITOR	SI
SLUDGE	SLG
SUPERNATANT	SN
SAND SLURRY	SND
SULFUR DIOXIDE (GAS OR LIQUID)	SO
SULFUR DIOXIDE SOLUTION	SOS
SULFUR DIOXIDE GAS UNDER VACUUM	SOV
SPARE	SP
SUMP PUMP DISCHARGE	SPD
SANITARY SEWER	SS
SODIUM SILICOFLUORIDE	SSF
STEAM	STM
SUBDRAIN	SUBD
STRUCTURE UNDERDRAIN	SU
STRUCTURE UNDERDRAIN COLLECTOR	SUC
SERVICE WATER	SW
TRICKLING FILTER EFFLUENT	TFE
TRICKLING FILTER INFLUENT	TFI
TRICKLING FILTER RECYCLE	TFR
THICKENED SLUDGE	TS
THICKENED SUPERNATANT	TSN
TREATED WATER	TW
UNDERDRAIN	UD
ULTRAVIOLET EFFLUENT	UVE
ULTRAVIOLET FEED	UVF
UTILITY WATER	UW
USED WASHWATER	UWW
VENT	VT
VACUUM	VC
WASTE ACTIVATED SLUDGE	WAS
WASTE LUBE OIL	WLO
WASTE SECONDARY SLUDGE	WSS

EQUIPMENT ABBREVIATIONS

AIR COMPRESSOR	ACP
AIR COMPRESSOR PACKAGE	ACPP
AIR DAMPER	AD
AIR DRYER	ADR
AIR FILTER	AF
AFTER COOLER	AFC
AIR HANDLING UNIT	AHU
AIR RELEASE VALVE	ARV
BACK FLOW PREVENTER	BFP
BACK PRESSURE VALVE	BPV
BLOWER	B
BULK STORAGE TANK	BTK
CARTRIDGE FILTER	CF
CLEAN IN PLACE	CIP
CONVEYOR	CN
DAY TANK	DTK
DEGASIFIER	DG
ELECTRIC FAN / EXHAUST	EF
EYE WASH	EW
FLOW CONTROL VALVE	FCV
FILTER (GENERAL)	FTR
SLIDE GATE / SLUICE GATE	G
HEATER	H
LINE FILTER (STRAINER)	LF
LEVEL CONTROL VALVE	LCV
MECHANICAL EQUIPMENT (GENERAL)	ME
MIXER	MX
MOTOR OPERATOR VALVE	MOV
PRESSURE CONTROL VALVE	PCV
PNEUMATIC OPERATOR VALVE	POV
PRESSURE REDUCING OR REGULATING VALVE	PRV
PRESSURE SAFETY VALVE	PSV
PUMP	P
RUPTURE DISK	RD
SLIDE GATE	SG
SOLENOID OPERATOR VALVE	SOV
TEMPERATURE CONTROL VALVE	TCV
TANK	TK
VALVE (MANUAL)	V
POSITION CONTROL VALVE	ZCV

VALVE ABBREVIATIONS

GATE VALVE	VG
BALL VALVE	VB
BUTTERFLY VALVE	VF
CHECK VALVE	VC
DIAPHRAGM VALVE	VD
GLOBE VALVE	VO
NEEDLE VALVE	VN
PLUG VALVE	VP
SPECIALTY VALVES	VX

VALVES

- 3 WAY MULTI-PORT VALVE
- 4 WAY MULTI-PORT VALVE
- AIR VACUUM, AIR RELEASE, OR COMBINATION AIR VACUUM AND AIR RELEASE ASSEMBLY
- ANGLE VALVE
- BACK-PRESSURE VALVE
- BACKFLOW PREVENTER VALVE
- BALL VALVE
- BUTTERFLY VALVE
- CHECK VALVE
- CONE VALVE
- DIAPHRAGM VALVE
- FLAP VALVE
- GATE VALVE
- GLOBE VALVE
- HOSE BIBB VALVE
- NEEDLE VALVE
- PINCH VALVE
- PLUG VALVE
- PRESSURE REGULATING VALVE
- PRESSURE RELIEF VALVE
- SLEEVE VALVE
- TELESCOPING VALVE
- FLOAT VALVE

VALVE AND GATE ACTUATORS

- DIAPHRAGM ACTUATOR
- E/H = ELECTROHYDRAULIC
P = PNEUMATIC
S = SOLENOID
- MOTOR ACTUATOR
- PISTON ACTUATOR
- WEIGHT BALANCED ACTUATOR

GATES

- SLIDE GATE
- STOP GATE OR SHEAR GATE

WASTEWATER EQUIPMENT

- BELT FILTER PRESS
- SHAFTLESS CONVEYOR
- SCREW CONVEYOR
- CENTRIFUGE
- GRAVITY BELT THICKENER
- BELT CONVEYOR
- SLUDGE GRINDER
- SLIDE GATE (NORMALLY OPEN)
- SLIDE GATE (NORMALLY CLOSED)

PUMPS & COMPRESSORS

- SLUDGE DIAPHRAGM PUMP
- HORIZONTAL CENTRIFUGAL PUMP
- GENERIC PUMP
- CHEMICAL METERING PUMP
- DRUM PUMP
- ROTARY GEAR PUMP
- SPLIT-CASE PUMP
- HOSE / PERISTALTIC PUMP
- PLUNGER / PISTON PUMP
- PROGRESSIVE CAVITY PUMP
- ROTARY LOBE PUMP
- SUBMERSIBLE SUMP PUMP
- SUBMERSIBLE TURBINE PUMP
- VERTICAL TURBINE PUMP
- VERTICAL CENTRIFUGAL PUMP
- INCLINED ARCHIMEDES SCREW PUMP
- VERTICAL SUMP PUMP
- RECIPROCATING COMPRESSOR
- ROTARY SCREW COMPRESSOR

- LSH — LEVEL DETECTION SWITCH FLOAT ACTUATED TYPE
- FE / M — MAGNETIC FLOW METER
- FE — ULTRASONIC (DOPPLER) TYPE FLOW METER
- LE / LIT — LEVEL TRANSMITTER SONIC TYPE
- LIT / LE — LEVEL SUBMERSIBLE PRESSURE TYPE

PIPING ACCESSORIES

- ANNULAR SEAL
- ATMOSPHERIC VENT
- BLIND FLANGE
- CAP - BREATHER
- CAP - SCREW / THREADED
- CAP - WELDED
- CAP - QUICK DISCONNECT
- CHLORINE INJECTOR OR CHEMICAL EDUCTOR
- DIAPHRAGM SEAL
- DRAIN
- EXPANSION CHAMBER WITH RUPTURE DISK
- EDUCTOR
- FLANGED
- OR — FLEXIBLE CONNECTION - BELLOWS TYPE
- FLAME ARRESTOR
- FCO / FCO — FLOOR CLEANOUT
- FILTER
- HUB DRAIN
- INLINE MIXER
- PIPE MATERIAL CHANGE
- PULSATION DAMPENER
- REDUCER - CONCENTRIC
- REDUCER - ECCENTRIC
- REMOVABLE SPOOL PIECE
- UNION
- RUPTURE DISK
- STRAINER - BASKET TYPE
- STRAINER - DUPLEX BASKET TYPE
- STRAINER - WYE TYPE
- SLOPE
- TRAP
- OR WCO / WCO — WALL CLEANOUT
- TP — TIE-IN POINT

BLOWERS

- AERATOR
- BLOWER
- POSITIVE DISPLACEMENT BLOWER
- SINGLE STAGE CENTRIFUGAL BLOWER

MISCELLANEOUS

- BRIDGE CRANE
- CALIBRATION COLUMN
- CONTAINER SCALE
- CARTRIDGE FILTER
- DEMISTOR
- FIRE HYDRANT
- GAS BOTTLE
- HEAT EXCHANGER - PLATE TYPE
- HEAT EXCHANGER - STRAIGHT TYPE
- HEAT EXCHANGER - U TUBE
- HEATER
- HORN
- PANEL-MOUNTED HORN
- BEACON
- MISCELLANEOUS EQUIPMENT
- MIXER
- M — MOTOR SYMBOL
- HORIZONTAL PRESSURE VESSEL
- VERTICAL PRESSURE VESSEL
- RADIO ANTENNA
- REFRIGERATOR DRYER
- SAMPLE COOLER
- AUTO-BACKWASHING STRAINER
- TANK WITH CONE SHAPED ROOF
- TANK WITH DOME ROOF
- TANK WITH FLOATING COVER
- TANK, VESSEL, OR BIN
- TEMPERING TANK
- TOTE TANK
- WATER LEVEL
- GENERATOR
- PARTICULATE FILTER
- AIR COMPRESSOR
- DISCHARGE SILENCER

THE CITY OF LOS ANGELES OR ITS OFFICERS OR AGENTS SHALL NOT BE RESPONSIBLE FOR THE ACCURACY OR COMPLETENESS OF ELECTRONIC COPIES OF THIS PLAN SHEET.

REVISION DATES (DESIGN STAGE ONLY)

ENGINEERING
CITY OF LOS ANGELES
Environmental Engineering Design
EED

PROFESSIONAL ENGINEER * REGISTERED * CIVIL * STATE OF CALIFORNIA
ROBERT D. GETTER
No. C 31884
Exp. 06-30-27

• THIS PLAN WAS ELECTRONICALLY SIGNED AND STAMPED

BUREAU OF ENGINEERING

VERTICAL CONTROL:
HORIZONTAL CONTROL:

SHEET TITLE: INSTRUMENTATION SYMBOLS
PROJECT: MACARTHUR LAKE STORMWATER CAPTURE PROJECT
ADDRESS: MACARTHUR PARK 2230 6TH ST LOS ANGELES CA 90057

DEPARTMENT OF PUBLIC WORKS

NO	REVISIONS	DATE	BY

CIP NO. 1920R004

INDEX NO. D-XXXXX

CITY OF LOS ANGELES

	DESIGN GROUP	DATE
ENGINEER:	ROBERT GETTER	01/22/2026
ARCHITECT:		01/22/2026
DESIGNED BY:	HENRY LUONG	01/22/2026
DRAWN BY:	CHARLEY KHUU / PAVEL PETIN	01/22/2026
CHECKED BY:	ROBERT GETTER / ROBERT MORRONI	01/22/2026
APPROVED BY:	ROBERT GETTER	01/22/2026

ProjectLine Technical Services, Inc

carollo

WORK ORDER S33WMLRP, S043MSWC, S343MSWC

SHEET NAME
IG002
SHEET 101 OF 108 SHEETS

SHEET VERSION 4.0.1 FILE PATH: C:\PW_WORKING\CAROLLO_200000\D0225953\203818IG002.DWG PLOT DATE: 1/15/2026 3:59 PM SAVED: 1/15/2026 3:51 PM SAVED BY:CHARLEY

FINAL DESIGN SUBMITTAL

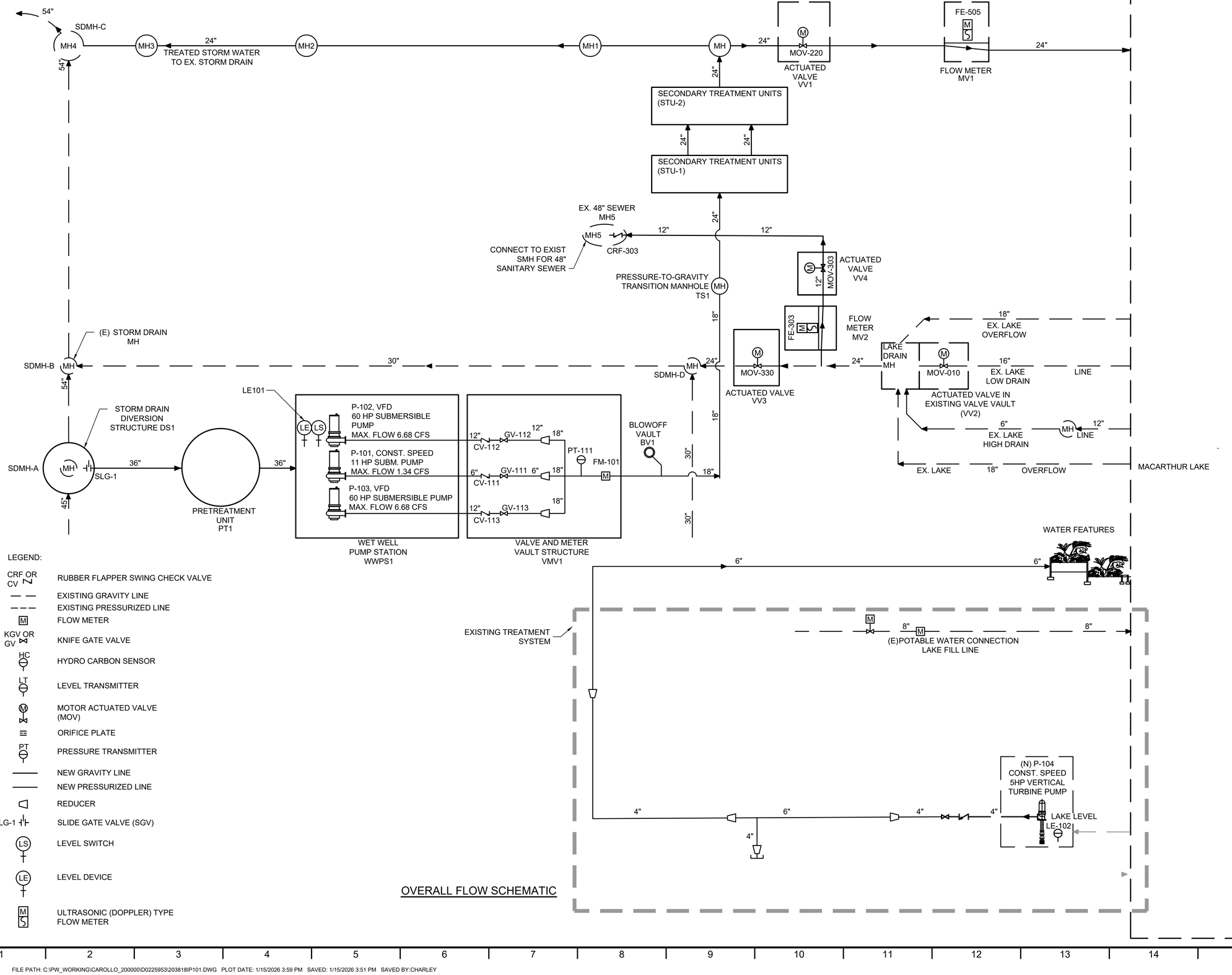

OVERALL FLOW SCHEMATIC

THE CITY OF LOS ANGELES OR ITS OFFICERS OR AGENTS SHALL NOT BE RESPONSIBLE FOR THE ACCURACY OR COMPLETENESS OF ELECTRONIC COPIES OF THIS PLAN SHEET.

REVISION DATES (DESIGN STAGE ONLY)

ENGINEERING
CITY OF LOS ANGELES
Environmental Engineering Division

THIS PLAN WAS ELECTRONICALLY SIGNED AND STAMPED

PROFESSIONAL ENGINEER
ROBERT D. GETTER
No. E 21884
Exp. 06-30-27
REGISTERED
CIVIL ENGINEER
CALIFORNIA

BUREAU OF ENGINEERING

VERTICAL CONTROL:
HORIZONTAL CONTROL:

SHEET TITLE: OVERALL FLOW SCHEMATIC

PROJECT: MACARTHUR LAKE STORMWATER CAPTURE PROJECT

ADDRESS: MACARTHUR PARK
2230 6TH ST LOS ANGELES CA 90057

DEPARTMENT OF PUBLIC WORKS

NO	REVISIONS	DATE	BY

CIP NO. 1920R004

INDEX NO. D-XXXXX

CITY OF LOS ANGELES

	DESIGN GROUP	DATE
ENGINEER:	ROBERT GETTER	01/22/2026
ARCHITECT:		
DESIGNED BY:	HENRY LUONG	01/22/2026
DRAWN BY:	CHARLEY KHUU / PAVEL PETIN	01/22/2026
CHECKED BY:	ROBERT GETTER ROBERT MORRONI	01/22/2026
APPROVED BY:	ROBERT GETTER	01/22/2026

WORK ORDER
S33WMLRP, S043MSWC, S343MSWC

SHEET NAME
IP101
SHEET 102 OF 108 SHEETS

ProjectLine
Technical Services, Inc

carollo

FINAL DESIGN SUBMITTAL

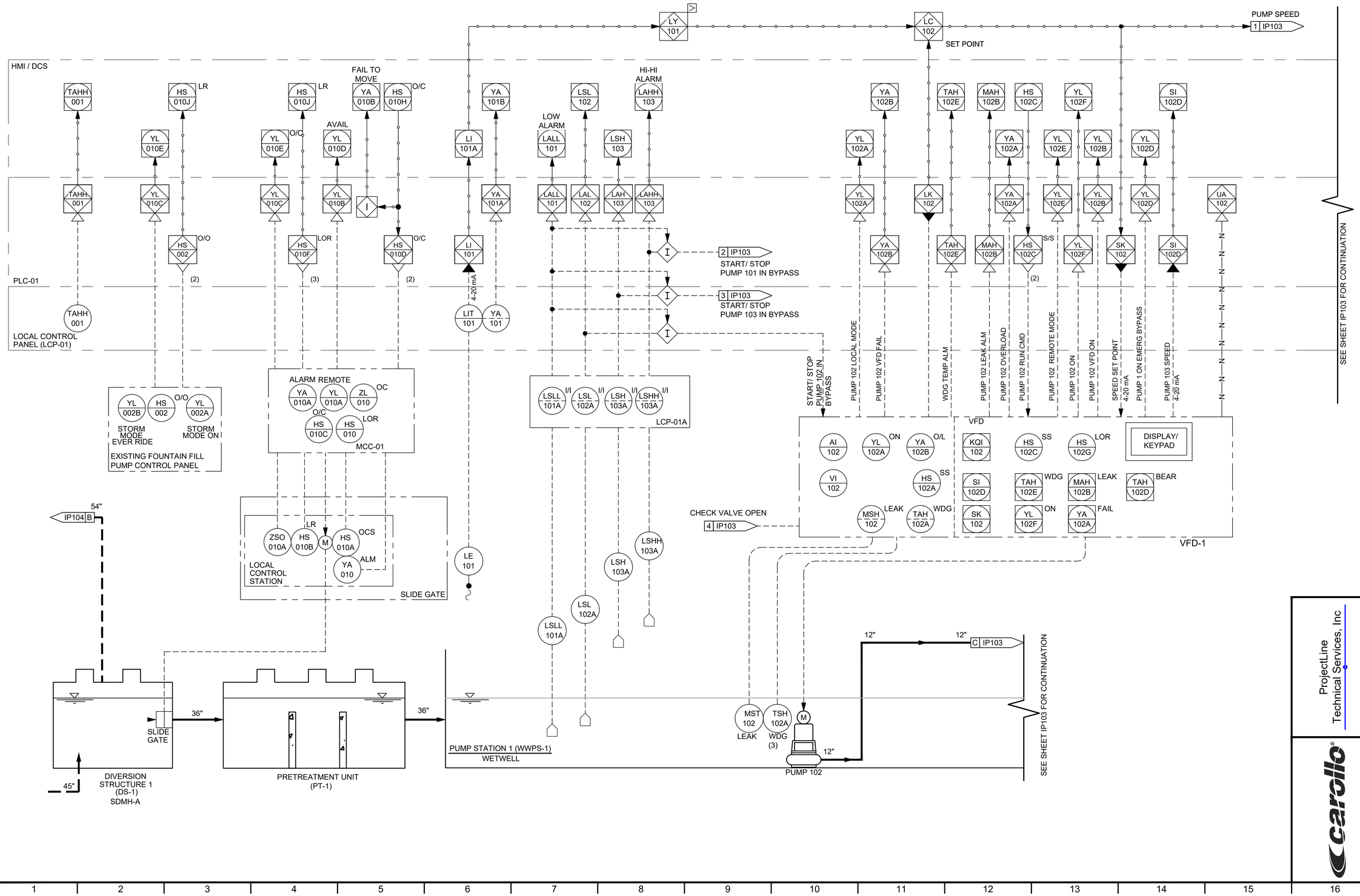

THE CITY OF LOS ANGELES OR ITS OFFICERS OR AGENTS SHALL NOT BE RESPONSIBLE FOR THE ACCURACY OR COMPLETENESS OF ELECTRONIC COPIES OF THIS PLAN SHEET.

REVISION DATES (DESIGN STAGE ONLY)

ENGINEERING
CITY OF LOS ANGELES
Environmental Engineering Division

THIS PLAN WAS ELECTRONICALLY SIGNED AND STAMPED

REGISTERED PROFESSIONAL ENGINEER JEFFREY D. GETTER No. E 21884 Exp. 06-30-27 CIVIL

BUREAU OF ENGINEERING
VERTICAL CONTROL:
HORIZONTAL CONTROL:
SHEET TITLE: INSTRUMENTATION PLAN I
PROJECT: MACARTHUR LAKE STORMWATER CAPTURE PROJECT
ADDRESS: MACARTHUR PARK 2230 6TH ST LOS ANGELES CA 90057

DEPARTMENT OF PUBLIC WORKS
CITY OF LOS ANGELES

NO.	REVISIONS	DATE	BY

CIP NO. 1920R004
INDEX NO. D-XXXXX

	DESIGN GROUP	DATE
ENGINEER:	ROBERT GETTER	01/22/2026
ARCHITECT:		01/22/2026
DESIGNED BY:	HENRY LUONG	01/22/2026
DRAWN BY:	CHARLEY KHUU / PAVEL PETIN	01/22/2026
CHECKED BY:	ROBERT GETTER ROBERT MORRONI	01/22/2026
APPROVED BY:	ROBERT GETTER	01/22/2026

ProjectLine
Technical Services, Inc

carollo

WORK ORDER S33WMLRP, S043MSWC, S343MSWC

SHEET NAME
IP102
SHEET 103 OF 108 SHEETS

SHEET VERSION 4.0.1 FILE PATH: C:\PW_WORKING\CAROLLO_200000\D0225953\203818IP102.DWG PLOT DATE: 1/15/2026 3:59 PM SAVED: 1/15/2026 3:51 PM SAVED BY:CHARLEY

FINAL DESIGN SUBMITTAL

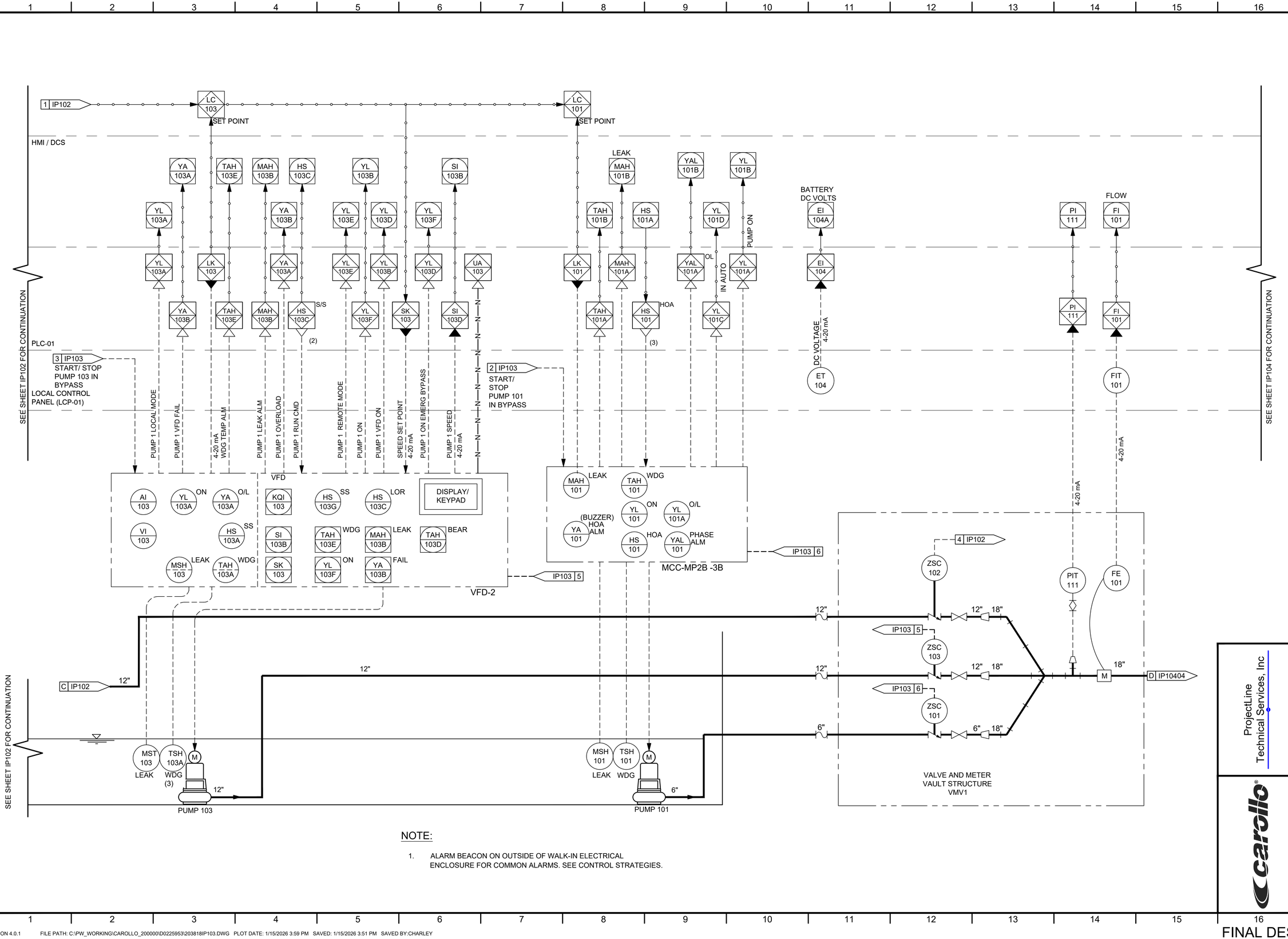

THE CITY OF LOS ANGELES OR ITS OFFICERS OR AGENTS SHALL NOT BE RESPONSIBLE FOR THE ACCURACY OR COMPLETENESS OF ELECTRONIC COPIES OF THIS PLAN SHEET.

REVISION DATES (DESIGN STAGE ONLY)

ENGINEERING
CITY OF LOS ANGELES
Environmental Engineering Division

• THIS PLAN WAS ELECTRONICALLY SIGNED AND STAMPED

BUREAU OF ENGINEERING
VERTICAL CONTROL:
HORIZONTAL CONTROL:
SHEET TITLE: INSTRUMENTATION PLAN II
PROJECT: MACARTHUR LAKE STORMWATER CAPTURE PROJECT
ADDRESS: MACARTHUR PARK 2230 6TH ST LOS ANGELES CA 90057

DEPARTMENT OF PUBLIC WORKS
CITY OF LOS ANGELES

NO	REVISIONS	DATE	BY

CIP NO. 1920R004
INDEX NO. D-XXXXX

	DESIGN GROUP	DATE
ENGINEER:	ROBERT GETTER	01/22/2026
ARCHITECT:		
DESIGNED BY:	HENRY LUONG	01/22/2026
DRAWN BY:	CHARLEY KHUU / PAVEL PETIN	01/22/2026
CHECKED BY:	ROBERT GETTER	ROBERT MORRONI 01/22/2026
APPROVED BY:	ROBERT GETTER	01/22/2026

ProjectLine Technical Services, Inc
carollo

WORK ORDER S33WMLRP, S043MSWC, S343MSWC

SHEET NAME
IP103
SHEET 104 OF 108 SHEETS

SHEET VERSION 4.0.1 FILE PATH: C:\PW_WORKING\CAROLLO_200000\D0225953\203818IP103.DWG PLOT DATE: 1/15/2026 3:59 PM SAVED: 1/15/2026 3:51 PM SAVED BY:CHARLEY

FINAL DESIGN SUBMITTAL

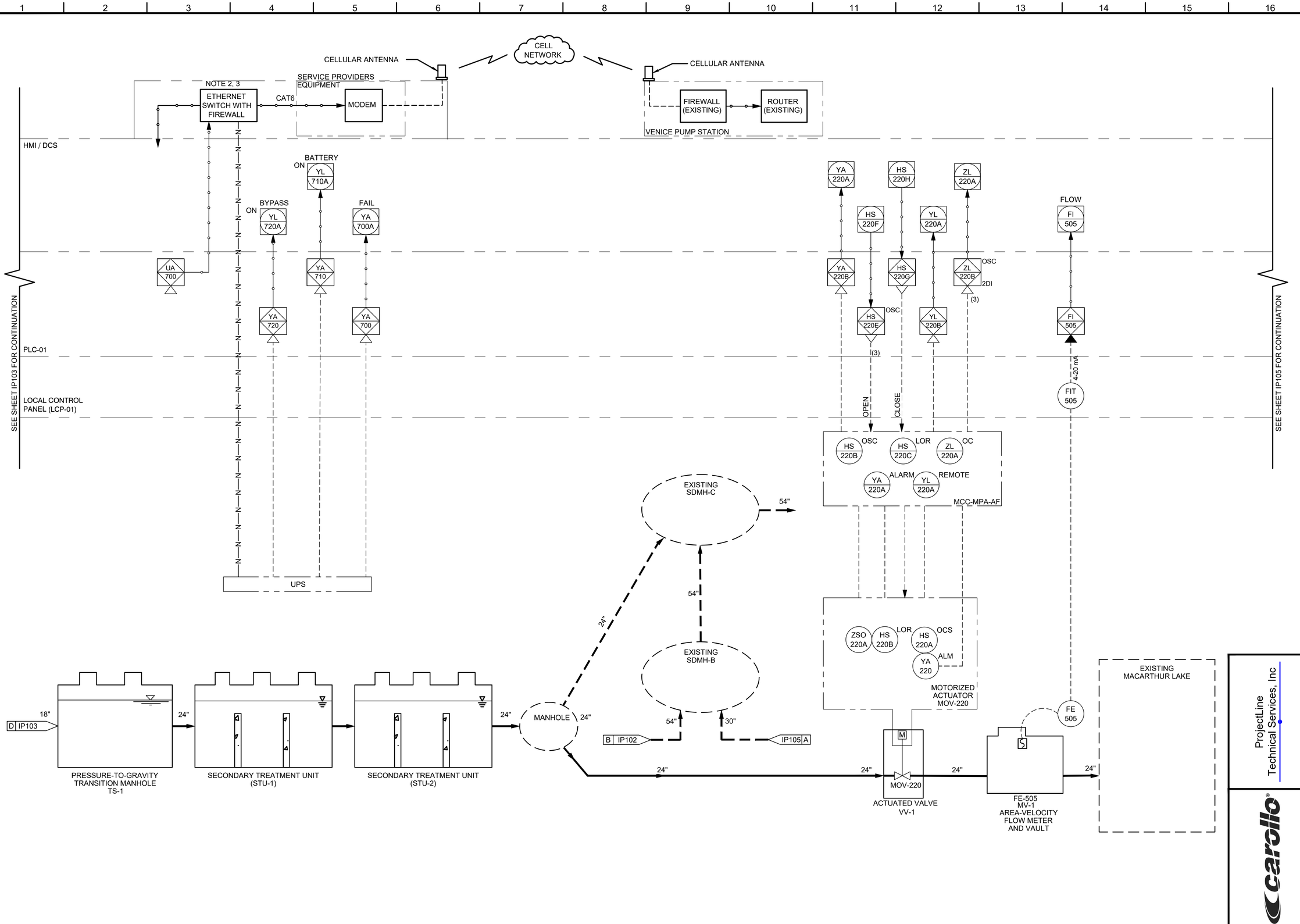

THE CITY OF LOS ANGELES OR ITS OFFICERS OR AGENTS SHALL NOT BE RESPONSIBLE FOR THE ACCURACY OR COMPLETENESS OF ELECTRONIC COPIES OF THIS PLAN SHEET.

REVISION DATES (DESIGN STAGE ONLY)

ENGINEERING
CITY OF LOS ANGELES
Environmental Engineering Division

• THIS PLAN WAS ELECTRONICALLY SIGNED AND STAMPED

REGISTERED PROFESSIONAL ENGINEER ★ ROBERT D. GETTER ★ No. E 21884 ★ Exp. 06-30-27 ★ CIVIL ★ STATE OF CALIFORNIA

BUREAU OF ENGINEERING

VERTICAL CONTROL:
HORIZONTAL CONTROL:

SHEET TITLE: INSTRUMENTATION PLAN III
PROJECT: MACARTHUR LAKE STORMWATER CAPTURE PROJECT
ADDRESS: MACARTHUR PARK 2230 6TH ST LOS ANGELES CA 90057

DEPARTMENT OF PUBLIC WORKS

NO	REVISIONS	DATE	BY

CIP NO. 1920R004

INDEX NO. D-XXXXX

CITY OF LOS ANGELES

DESIGN GROUP		DATE
ENGINEER:	ROBERT GETTER	01/22/2026
ARCHITECT:		
DESIGNED BY:	HENRY LUONG	01/22/2026
DRAWN BY:	CHARLEY KHUU / PAVEL PETIN	01/22/2026
CHECKED BY:	ROBERT GETTER	01/22/2026
APPROVED BY:	ROBERT GETTER	01/22/2026

ROBERT MORRONI

ProjectLine Technical Services, Inc

carollo

WORK ORDER S33WMLRP, S043MSWC, S343MSWC

SHEET NAME
IP104
SHEET 105 OF 108 SHEETS

FINAL DESIGN SUBMITTAL

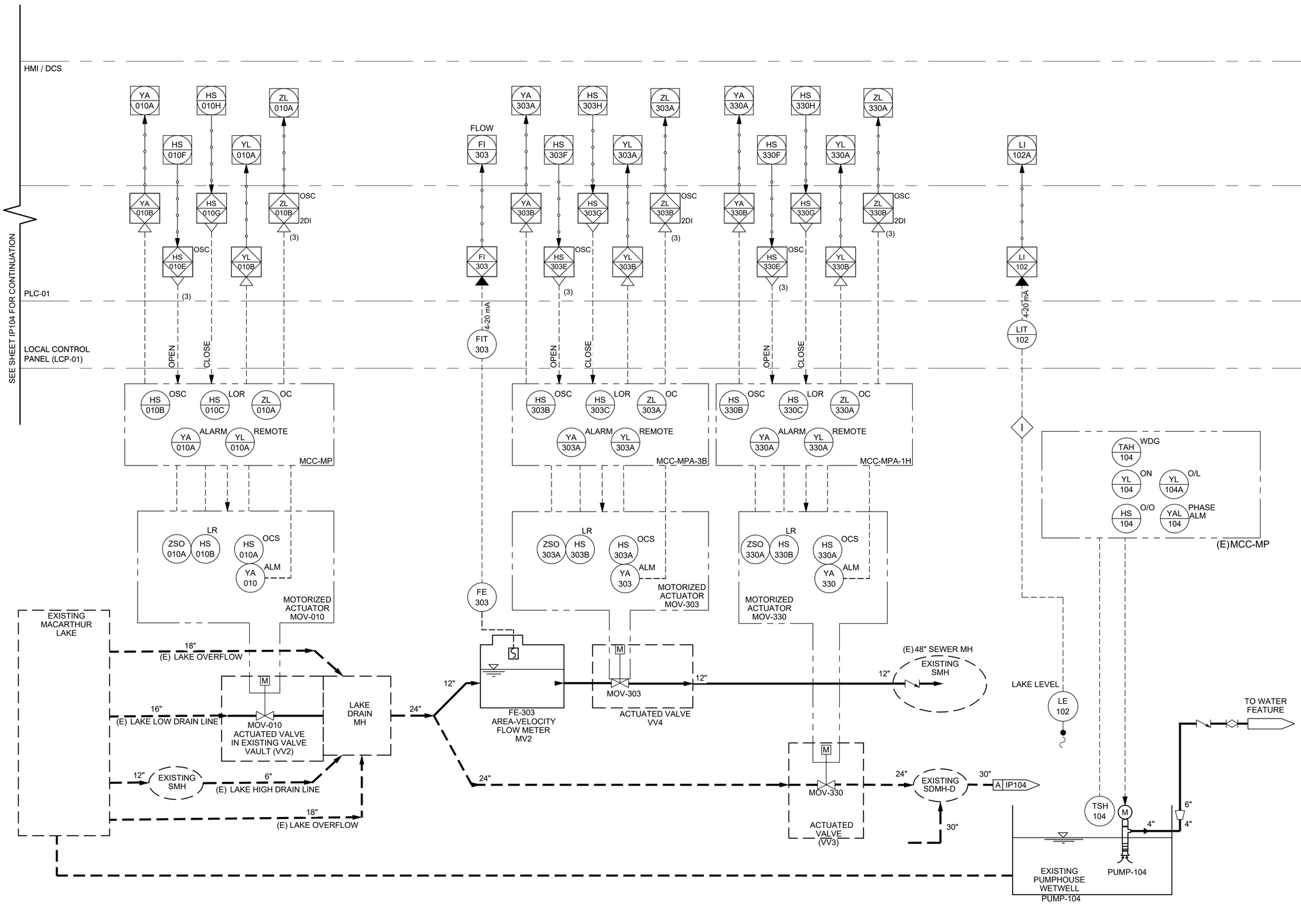

THE CITY OF LOS ANGELES OR ITS OFFICERS OR AGENTS SHALL NOT BE RESPONSIBLE FOR THE ACCURACY OR COMPLETENESS OF ELECTRONIC COPIES OF THIS PLAN SHEET.

REVISION DATES (DESIGN STAGE ONLY)

ENGINEERING
CITY OF LOS ANGELES
Environmental Engineering Design

THIS PLAN WAS ELECTRONICALLY SIGNED AND STAMPED

PROFESSIONAL ENGINEER ★ REGISTERED ★ ROBERT D. GETTER No. E 21884 Exp. 06-30-27 ★ CIVIL ★ STATE OF CALIFORNIA

BUREAU OF ENGINEERING

VERTICAL CONTROL:
HORIZONTAL CONTROL:

SHEET TITLE: INSTRUMENTATION PLAN IV
PROJECT: MACARTHUR LAKE STORMWATER CAPTURE PROJECT
ADDRESS: MACARTHUR PARK 2230 6TH ST LOS ANGELES CA 90057

DEPARTMENT OF PUBLIC WORKS

NO	REVISIONS	DATE	BY

CIP NO. 1920R004

INDEX NO. D-XXXXX

CITY OF LOS ANGELES

DESIGN GROUP		DATE
ENGINEER:	ROBERT GETTER	01/22/2026
ARCHITECT:		01/22/2026
DESIGNED BY:	HENRY LUONG	01/22/2026
DRAWN BY:	CHARLEY KHUU / PAVEL PETIN	01/22/2026
CHECKED BY:	ROBERT GETTER	ROBERT MORRONI 01/22/2026
APPROVED BY:	ROBERT GETTER	01/22/2026

ProjectLine Technical Services, Inc

carollo

WORK ORDER S33WMLRP, S043MSWC, S343MSWC

SHEET NAME
IP105
SHEET 106 OF 108 SHEETS

FINAL DESIGN SUBMITTAL

DISCRETE INPUTS				
SIGNAL TAG	P&ID DRAWING NO.	DESCRIPTION	I/O TYPE	SIGNAL
YA-010B	IP105	MOTORIZED ACTUATOR MOV-010. ACTUATED VALVE IN EXISTING VALVE VAULT (VV2)	DI	24 VDC, COMMON TROUBLE ALARM / FAIL ALARM
YL-220B	IP104	ACTUATED VALVE\P VV-1. MOTORIZED ACTUATOR MOV-220	DI	24 VDC, REMOTE MODE / RUNNING
YA-303B	IP105	MOTORIZED ACTUATOR MOV-303. ACTUATED VALVE VV4	DI	24 VDC, COMMON TROUBLE ALARM / FAIL ALARM
ZL-010B	IP105	MOTORIZED ACTUATOR MOV-010. ACTUATED VALVE IN EXISTING VALVE VAULT (VV2)	DI	24 VDC, OPEN STATUS
ZL-010B	IP105	MOTORIZED ACTUATOR MOV-010. ACTUATED VALVE IN EXISTING VALVE VAULT (VV2)	DI	24 VDC, STOP STATUS
ZL-010B	IP105	MOTORIZED ACTUATOR MOV-010. ACTUATED VALVE IN EXISTING VALVE VAULT (VV2)	DI	24 VDC, CLOSE STATUS
YL-010B	IP105	MOTORIZED ACTUATOR MOV-010. ACTUATED VALVE IN EXISTING VALVE VAULT (VV2)	DI	24 VDC, REMOTE MODE / RUNNING
ZL-220B	IP104	ACTUATED VALVE\P VV-1. MOTORIZED ACTUATOR MOV-220	DI	24 VDC, OPEN STATUS
ZL-220B	IP104	ACTUATED VALVE\P VV-1. MOTORIZED ACTUATOR MOV-220	DI	24 VDC, STOP STATUS
ZL-220B	IP104	ACTUATED VALVE\P VV-1. MOTORIZED ACTUATOR MOV-220	DI	24 VDC, CLOSE STATUS
YA-710	IP104	UPS	DI	24 VDC, COMMON TROUBLE ALARM / FAIL ALARM
UA-700	IP104	UPS	DI	24 VDC, STATUS ALARM
YL-101C	IP103	PUMP STATION 1 (WWPS-1) PUMP 103	DI	24 VDC, REMOTE MODE / RUNNING
YA-700	IP104	UPS	DI	24 VDC, COMMON TROUBLE ALARM / FAIL ALARM
YA-720	IP104	UPS	DI	24 VDC, COMMON TROUBLE ALARM / FAIL ALARM
YA-220B	IP104	ACTUATED VALVE\P VV-1. MOTORIZED ACTUATOR MOV-220	DI	24 VDC, COMMON TROUBLE ALARM / FAIL ALARM
TAHH-001	IP102	INTERNAL TEMPERATURE PLC-01	DI	24 VDC, TEMPERATURE HI-HI ALRM
YL-010C	IP102	DIVERSION STRUCTURE 1 (DS-1) SDMH-A SLIDE GATE	DI	24 VDC, REMOTE MODE / RUNNING
YL-010B	IP102	DIVERSION STRUCTURE 1 (DS-1) SDMH-A SLIDE GATE	DI	24 VDC, REMOTE MODE / RUNNING
YL-010C	IP102	EXISTING FOUNTAIN FILL PUMP CONTROL PANEL	DI	24 VDC, REMOTE MODE / RUNNING
YA-330B	IP105	MOTORIZED ACTUATOR MOV-330. ACTUATED VALVE (VV3)	DI	24 VDC, COMMON TROUBLE ALARM / FAIL ALARM
ZL-303B	IP105	MOTORIZED ACTUATOR MOV-303. ACTUATED VALVE VV4	DI	24 VDC, OPEN STATUS
ZL-303B	IP105	MOTORIZED ACTUATOR MOV-303. ACTUATED VALVE VV4	DI	24 VDC, STOP STATUS
ZL-303B	IP105	MOTORIZED ACTUATOR MOV-303. ACTUATED VALVE VV4	DI	24 VDC, CLOSE STATUS
YL-303B	IP105	MOTORIZED ACTUATOR MOV-303. ACTUATED VALVE VV4	DI	24 VDC, REMOTE MODE / RUNNING
ZL-330B	IP105	MOTORIZED ACTUATOR MOV-330. ACTUATED VALVE (VV3)	DI	24 VDC, OPEN STATUS
ZL-330B	IP105	MOTORIZED ACTUATOR MOV-330. ACTUATED VALVE (VV3)	DI	24 VDC, STOP STATUS
ZL-330B	IP105	MOTORIZED ACTUATOR MOV-330. ACTUATED VALVE (VV3)	DI	24 VDC, CLOSE STATUS
YL-330B	IP105	MOTORIZED ACTUATOR MOV-330. ACTUATED VALVE (VV3)	DI	24 VDC, REMOTE MODE / RUNNING
YL-102E	IP102	PUMP STATION 1 (WWPS-1) / PUMP 102	DI	24 VDC, REMOTE MODE / RUNNING
YL-102B	IP102	PUMP STATION 1 (WWPS-1) / PUMP 102	DI	24 VDC, REMOTE MODE / RUNNING
YA-102A	IP102	PUMP STATION 1 (WWPS-1) / PUMP 102	DI	24 VDC, COMMON TROUBLE ALARM / FAIL ALARM
YL-102F	IP102	PUMP STATION 1 (WWPS-1) / PUMP 102	DI	24 VDC, REMOTE MODE / RUNNING
YL-102D	IP102	PUMP STATION 1 (WWPS-1) / PUMP 102	DI	24 VDC, REMOTE MODE / RUNNING
MAH-102B	IP102	PUMP STATION 1 (WWPS-1) / PUMP 102	DI	24 VDC, MOISTURE / HUMIDITY ALARM HIGH
LAH-103	IP102	PUMP STATION 1 (WWPS-1)	DI	24 VDC, FLOAT SWITCH BASIN HI ALARM
LAHH-103	IP102	PUMP STATION 1 (WWPS-1)	DI	24 VDC, FLOAT SWITCH BASIN HI-HI ALARM
LALL-101	IP102	PUMP STATION 1 (WWPS-1)	DI	24 VDC, FLOAT SWITCH BASIN
LAL-102	IP102	PUMP STATION 1 (WWPS-1)	DI	24 VDC, FLOAT SWITCH BASIN
YA-101A	IP102	PUMP STATION 1 (WWPS-1)	DI	24 VDC, COMMON TROUBLE ALARM / FAIL ALARM
YA-102B	IP102	PUMP STATION 1 (WWPS-1) / PUMP 102	DI	24 VDC, COMMON TROUBLE ALARM / FAIL ALARM
TAH-102E	IP102	PUMP STATION 1 (WWPS-1) / PUMP 102	DI	24 VDC, TEMPERATURE HI ALRM
YL-102A	IP102	PUMP STATION 1 (WWPS-1) / PUMP 102	DI	24 VDC, REMOTE MODE / RUNNING
UA-102	IP102	PUMP STATION 1 (WWPS-1) / PUMP 102	DI	24 VDC, STATUS ALARM
UA-103	IP103	PUMP STATION 1 (WWPS-1) PUMP 103	DI	24 VDC, STATUS ALARM
MAH-101A	IP103	PUMP STATION 1 (WWPS-1) PUMP 103	DI	24 VDC, MOISTURE / HUMIDITY ALARM HIGH
YL-101A	IP103	PUMP STATION 1 (WWPS-1) PUMP 103	DI	24 VDC, REMOTE MODE / RUNNING
YAL-101A	IP103	PUMP STATION 1 (WWPS-1) PUMP 103	DI	24 VDC, OVERLOAD STATUS
TAH-101A	IP103	PUMP STATION 1 (WWPS-1) PUMP 103	DI	24 VDC, TEMPERATURE HI ALRM
TAH-103E	IP103	PUMP STATION 1 (WWPS-1) PUMP 103	DI	24 VDC, TEMPERATURE HI ALRM
MAH-103B	IP103	PUMP STATION 1 (WWPS-1) PUMP 103	DI	24 VDC, MOISTURE / HUMIDITY ALARM HIGH
YL-103A	IP103	PUMP STATION 1 (WWPS-1) PUMP 103	DI	24 VDC, REMOTE MODE / RUNNING
YA-103B	IP103	PUMP STATION 1 (WWPS-1) PUMP 103	DI	24 VDC, COMMON TROUBLE ALARM / FAIL ALARM
YA-103A	IP103	PUMP STATION 1 (WWPS-1) PUMP 103	DI	24 VDC, COMMON TROUBLE ALARM / FAIL ALARM
YL-103B	IP103	PUMP STATION 1 (WWPS-1) PUMP 103	DI	24 VDC, REMOTE MODE / RUNNING
YL-103D	IP103	PUMP STATION 1 (WWPS-1) PUMP 103	DI	24 VDC, REMOTE MODE / RUNNING
YL-103F	IP103	PUMP STATION 1 (WWPS-1) PUMP 103	DI	24 VDC, REMOTE MODE / RUNNING
YL-103E	IP103	PUMP STATION 1 (WWPS-1) PUMP 103	DI	24 VDC, REMOTE MODE / RUNNING

DISCRETE OUTPUTS				
SIGNAL TAG	P&ID DRAWING NO.	DESCRIPTION	I/O TYPE	SIGNAL
HS-010E	IP105	MOTORIZED ACTUATOR MOV-010. ACTUATED VALVE IN EXISTING VALVE VAULT (VV2)	DO	120 VAC, OPEN COMMAND
HS-010E	IP105	MOTORIZED ACTUATOR MOV-010. ACTUATED VALVE IN EXISTING VALVE VAULT (VV2)	DO	120 VAC, STOP COMMAND
HS-010E	IP105	MOTORIZED ACTUATOR MOV-010. ACTUATED VALVE IN EXISTING VALVE VAULT (VV2)	DO	120 VAC, CLOSE COMMAND
HS-010G	IP105	MOTORIZED ACTUATOR MOV-010. ACTUATED VALVE IN EXISTING VALVE VAULT (VV2)	DO	120 VAC, START/STOP COMMAND
HS-303E	IP105	MOTORIZED ACTUATOR MOV-303. ACTUATED VALVE VV4	DO	120 VAC, OPEN COMMAND
HS-303E	IP105	MOTORIZED ACTUATOR MOV-303. ACTUATED VALVE VV4	DO	120 VAC, STOP COMMAND
HS-303E	IP105	MOTORIZED ACTUATOR MOV-303. ACTUATED VALVE VV4	DO	120 VAC, CLOSE COMMAND
HS-220E	IP104	ACTUATED VALVE\P VV-1. MOTORIZED ACTUATOR MOV-220	DO	120 VAC, OPEN COMMAND
HS-220E	IP104	ACTUATED VALVE\P VV-1. MOTORIZED ACTUATOR MOV-220	DO	120 VAC, STOP COMMAND
HS-220E	IP104	ACTUATED VALVE\P VV-1. MOTORIZED ACTUATOR MOV-220	DO	120 VAC, CLOSE COMMAND
HS-220G	IP104	ACTUATED VALVE\P VV-1. MOTORIZED ACTUATOR MOV-220	DO	120 VAC, START/STOP COMMAND
HS-303G	IP105	MOTORIZED ACTUATOR MOV-303. ACTUATED VALVE VV4	DO	120 VAC, START/STOP COMMAND
HS-010F	IP102	DIVERSION STRUCTURE 1 (DS-1) SDMH-A SLIDE GATE	DO	120 VAC, LOCAL COMMAND
HS-010F	IP102	DIVERSION STRUCTURE 1 (DS-1) SDMH-A SLIDE GATE	DO	120 VAC, REMOTE COMMAND
HS-010F	IP102	DIVERSION STRUCTURE 1 (DS-1) SDMH-A SLIDE GATE	DO	120 VAC, 0 COMMAND
HS-010D	IP102	DIVERSION STRUCTURE 1 (DS-1) SDMH-A SLIDE GATE	DO	120 VAC, OPEN COMMAND
HS-010D	IP102	DIVERSION STRUCTURE 1 (DS-1) SDMH-A SLIDE GATE	DO	120 VAC, CLOSE COMMAND
HS-002	IP102	EXISTING FOUNTAIN FILL PUMP CONTROL PANEL	DO	120 VAC, OPEN COMMAND
HS-002	IP102	EXISTING FOUNTAIN FILL PUMP CONTROL PANEL	DO	120 VAC, CLOSE COMMAND
HS-330E	IP103	PUMP STATION 1 (WWPS-1) PUMP 103	DO	120 VAC, START/STOP COMMAND
HS-330G	IP105	MOTORIZED ACTUATOR MOV-330. ACTUATED VALVE (VV3)	DO	120 VAC, OPEN COMMAND
HS-330G	IP105	MOTORIZED ACTUATOR MOV-330. ACTUATED VALVE (VV3)	DO	120 VAC, STOP COMMAND
HS-330G	IP105	MOTORIZED ACTUATOR MOV-330. ACTUATED VALVE (VV3)	DO	120 VAC, CLOSE COMMAND
HS-102C	IP105	MOTORIZED ACTUATOR MOV-330. ACTUATED VALVE (VV3)	DO	120 VAC, START/STOP COMMAND
HS-103C	IP102	PUMP STATION 1 (WWPS-1) / PUMP 102	DO	120 VAC, START COMMAND
HS-103C	IP102	PUMP STATION 1 (WWPS-1) / PUMP 102	DO	120 VAC, STOP COMMAND
HS-101	IP102	PUMP STATION 1 (WWPS-1) / PUMP 102	DO	120 VAC, START/STOP COMMAND

ANALOG INPUTS				
SIGNAL TAG	P&ID DRAWING NO.	DESCRIPTION	I/O TYPE	SIGNAL
FI-505	IP104	MV-1 AREA-VELOCITY FLOW METER AND VAULT FE-505	AI	4-20 mA, FLOW (HIGH FLOW/LOW FLOW)
EI-104	IP103	BATTERY DC VOLTS	AI	4-20 mA, VOLTAGE INDICATE
PI-111	IP103	VALVE AND METER VAULT STRUCTURE VMV1	AI	4-20 mA, PRESSURE INDICATION
FI-101	IP103	VALVE AND METER VAULT STRUCTURE VMV1	AI	4-20 mA, FLOW (HIGH FLOW/LOW FLOW)
FI-303	IP105	AREA-VELOCITY FLOW METER MV2. FE-303	AI	4-20 mA, FLOW (HIGH FLOW/LOW FLOW)
LI-102	IP105	EXISTING PUMPHOUSE WETWELL PUMP 104	AI	4-20 mA, LEVEL
SI-102D	IP102	PUMP STATION 1 (WWPS-1) / PUMP 102	AI	4-20 mA, SPEED
LI-101	IP102	PUMP STATION 1 (WWPS-1)	AI	4-20 mA, LEVEL
SI-103D	IP103	PUMP STATION 1 (WWPS-1) PUMP 103	AI	4-20 mA, SPEED

ANALOG OUTPUTS				
SIGNAL TAG	P&ID DRAWING NO.	DESCRIPTION	I/O TYPE	SIGNAL
LK-101	IP103	PUMP STATION 1 (WWPS-1) PUMP 103	AO	24 VDC, PLC CABINET LEVEL CONTROL STATION
SK-102	IP102	PUMP STATION 1 (WWPS-1) / PUMP 102	AO	4-20 mA, SPEED CONTROL
LK-102	IP102	PUMP STATION 1 (WWPS-1) / PUMP 102	AO	24 VDC, PLC CABINET LEVEL CONTROL STATION
SK-103	IP103	PUMP STATION 1 (WWPS-1) PUMP 103	AO	4-20 mA, SPEED CONTROL
LK-103	IP103	PUMP STATION 1 (WWPS-1) PUMP 103	AO	24 VDC, PLC CABINET LEVEL CONTROL STATION

THE CITY OF LOS ANGELES OR ITS OFFICERS OR AGENTS SHALL NOT BE RESPONSIBLE FOR THE ACCURACY OR COMPLETENESS OF ELECTRONIC COPIES OF THIS PLAN SHEET.

REVISION DATES (DESIGN STAGE ONLY)

ProjectLine
Technical Services, Inc

carollo

ENGINEERING
CITY OF LOS ANGELES
Environmental Engineering Division

THIS PLAN WAS ELECTRONICALLY SIGNED AND STAMPED

ROBERT D. GETTER PROFESSIONAL ENGINEER REGISTERED CIVIL ENGINEER No. E 21584 Exp. 06-30-27 STATE OF CALIFORNIA

BUREAU OF ENGINEERING
VERTICAL CONTROL:
HORIZONTAL CONTROL:
SHEET TITLE: PLC INPUT OUTPUT LIST 1
PROJECT: MACARTHUR LAKE STORMWATER CAPTURE PROJECT
ADDRESS: MACARTHUR PARK 2230 6TH ST LOS ANGELES CA 90057

DEPARTMENT OF PUBLIC WORKS
CIP NO. 1920R004
INDEX NO. D-XXXXX

NO	REVISIONS	BY	DATE

CITY OF LOS ANGELES

DESIGN GROUP		DATE
ENGINEER:	ROBERT GETTER	01/22/2026
ARCHITECT:		
DESIGNED BY:	HENRY LUONG	01/22/2026
DRAWN BY:	CHARLEY KHUU / PAVEL PETIN	01/22/2026
CHECKED BY:	ROBERT GETTER	01/22/2026
APPROVED BY:	ROBERT GETTER	01/22/2026

WORK ORDER
S33WMLRP, S043MSWC, S343MSWC

SHEET NAME
IP106
SHEET 107 OF 108 SHEETS

LEVEL SWITCH - FLOAT							
INSTRUMENT TAG	DESCRIPTION/ LOCATION	DWG NO.	SERVICE	TYPE	HEIGHT	CONTACT OPEN ON	REMARKS
LSH-103	PUMP STATION 1 (WWPS-1)	IP102	STORM WATER	FLOAT	242.00: LEAD LARGE PUMP ON	CONTACT CLOSED AT HI LEVEL	HI ALARM
LSHH-103	PUMP STATION 1 (WWPS-1)	IP102	STORM WATER	FLOAT	248.00: HI-HI LEVEL ALARM	CONTACT CLOSED AT HI-HI LEVEL	HI HI ALARM
LSL-102	PUMP STATION 1 (WWPS-1)	IP102	STORM WATER	FLOAT	238.50: SMALL PUMP OFF	CONTACT CLOSED AT LO LEVEL	PUMP 1 ON
LSLL-101	PUMP STATION 1 (WWPS-1)	IP102	STORM WATER	FLOAT	239.50: SMALL PUMP ON	CONTACT CLOSED AT LO-LO LEVEL	PUMP SHUT DOWN

LEVEL TRANSMITTER SCHEDULE							
INSTRUMENT TAG	DESCRIPTION/ LOCATION	DWG NO.	SERVICE	TYPE	INSTRUMENT RANGE	CALIBRATED RANGE	REMARKS
LE-101	PUMP STATION 1 (WWPS-1) LEVEL ELEMENT ULTRASONIC (DOPPLER) TYPE	IP102	LAKE WATER	ULTRASONIC	1.5' TO 50'	-	MANUFACTURER CABLE
LIT-101	PUMP STATION 1 (WWPS-1) LEVEL TRANSMITTER ULTRASONIC (DOPPLER) TYPE	IP102	LAKE WATER	ULTRASONIC	-	0' TO 12'	MANUFACTURER CABLE
LE-102	EXISTING PUMPHOUSE WETWELL PUMP 104 LEVEL ELEMENT ULTRASONIC (DOPPLER) TYPE	IP105	LAKE WATER	ULTRASONIC	1.5' TO 50'	-	MANUFACTURER CABLE
LIT-102	EXISTING PUMPHOUSE WETWELL PUMP 104 LEVEL TRANSMITTER ULTRASONIC (DOPPLER) TYPE	IP105	LAKE WATER	ULTRASONIC	-	0'' TO 12'	MANUFACTURER CABLE

FLOW METERS							
INSTRUMENT TAG	DESCRIPTION/ LOCATION	DWG NO.	SERVICE	METER SIZE	LINE SIZE	INSTRUMENT RANGE (GPM)	CALIBRATED SCALE
FE-101	FLOW ELEMENT/ MAGNETIC FLOW METER VALVE VAULT VALVE AND METER VAULT STRUCTURE VMV1	IP103	STORM WATER	18"	18"	0 TO 6000	0 TO 3000 GPM
FIT-101	FLOW ELEMENT/ MAGNETIC FLOW METER VALVE VAULT VALVE AND METER VAULT STRUCTURE VMV1	IP103	STORM WATER	18"	18"	0 TO 6000	0 TO 3000 GPM

FLOW METER - AREA-VELOCITY							
INSTRUMENT TAG	DESCRIPTION/ LOCATION	DWG NO.	SERVICE	METER SIZE	LINE SIZE	INSTRUMENT RANGE	CALIBRATED SCALE
FE-505	FLOW ELEMENT/ MAGNETIC FLOW METER VALVE VAULT MV-1 AREA-VELOCITY FLOW METER AND VAULT FE-505	IP104	STORM WATER	-	-	0 TO 15 FT/S	
FIT-505	FLOW ELEMENT/ MAGNETIC FLOW METER VALVE VAULT MV-1 AREA-VELOCITY FLOW METER AND VAULT FE-505	IP104	STORM WATER	-	-	0 TO 5000 GPM	0 TO 3000 GPM
FE-303	FLOW ELEMENT/ MAGNETIC FLOW METER VALVE VAULT AREA-VELOCITY FLOW METER MV2. FE-303	IP105	STORM WATER	-	-	0 TO 15 FT/S	
FIT-303	FLOW ELEMENT/ MAGNETIC FLOW METER VALVE VAULT AREA-VELOCITY FLOW METER MV2. FE-303	IP105	STORM WATER	-	-	0 TO 5000 GPM	0 TO 3000 GPM

PRESSURE TRANSMITTER SCHEDULE							
INSTRUMENT TAG	DESCRIPTION/ LOCATION	DWG NO.	SERVICE	TYPE	INSTRUMENT RANGE	CALIBRATED SCALE	REMARKS
PIT-111	PRESSURE TRANSMITTER VALVE AND METER VAULT STRUCTURE VMV1	IP103	STORM WATER	PRESSURE	0 TO 100 PSI	0 TO 100 PSI	MANUFACTURE CABLE

PROXIMITY SWITCH							
INSTRUMENT TAG	DESCRIPTION/ LOCATION	DWG NO.	SERVICE	TYPE	HEIGHT	CONTACT OPEN ON	REMARKS
ZSO/ZSC-010B	MOTORIZED ACTUATOR MOV-010. ACTUATED VALVE IN EXISTING VALVE VAULT (VV2)	IP105	DOOR OPEN/ CLOSED	INDUCTIVE	0 TO 1.5"	0 TO 1.5"	2 WIRE, 24 VDC
ZSO/ZSC-220B	ACTUATED VALVE\P VV-1. MOTORIZED ACTUATOR MOV-220	IP104	DOOR OPEN/ CLOSED	INDUCTIVE	0 TO 1.5"	0 TO 1.5"	2 WIRE, 24 VDC
ZSO/ZSC-303B	MOTORIZED ACTUATOR MOV-303. ACTUATED VALVE VV4	IP105	DOOR OPEN/ CLOSED	INDUCTIVE	0 TO 1.5"	0 TO 1.5"	2 WIRE, 24 VDC
ZSO/ZSC-330B	MOTORIZED ACTUATOR MOV-330. ACTUATED VALVE (VV3)	IP105	DOOR OPEN/ CLOSED	INDUCTIVE	0 TO 1.5"	0 TO 1.5"	2 WIRE, 24 VDC

THE CITY OF LOS ANGELES OR ITS OFFICERS OR AGENTS SHALL NOT BE RESPONSIBLE FOR THE ACCURACY OR COMPLETENESS OF ELECTRONIC COPIES OF THIS PLAN SHEET.

REVISION DATES (DESIGN STAGE ONLY)

ENGINEERING
CITY OF LOS ANGELES
Environmental Engineering Design

• THIS PLAN WAS ELECTRONICALLY SIGNED AND STAMPED •

PROFESSIONAL ENGINEER ★ REGISTERED ★ CIVIL ★ CALIFORNIA
ROBERT D. GETTER
No. C 31584
Exp. 06-30-27

BUREAU OF ENGINEERING

VERTICAL CONTROL:
HORIZONTAL CONTROL:

SHEET TITLE: PLC INPUT OUTPUT LIST 2

PROJECT: MACARTHUR LAKE STORMWATER CAPTURE PROJECT

ADDRESS: MACARTHUR PARK
2230 6TH ST LOS ANGELES CA 90057

DEPARTMENT OF PUBLIC WORKS

NO.	REVISIONS	DATE	BY

CIP NO. 1920R004

INDEX NO. D-XXXXX

CITY OF LOS ANGELES

DESIGN GROUP		DATE
ENGINEER:	ROBERT GETTER	01/22/2026
ARCHITECT:		
DESIGNED BY:	HENRY LUONG	01/22/2026
DRAWN BY:	CHARLEY KHUU / PAVEL PETIN	01/22/2026
CHECKED BY:	ROBERT GETTER	ROBERT MORRONI 01/22/2026
APPROVED BY:	ROBERT GETTER	01/22/2026

WORK ORDER
S33WMLRP, S043MSWC, S343MSWC

SHEET NAME
IP107

SHEET 108 OF 108 SHEETS

ProjectLine
Technical Services, Inc

carollo

FINAL DESIGN SUBMITTAL

BUREAU OF ENGINEERING

MACARTHUR LAKE
STORMWATER CAPTURE PROJECT
WORK ORDER NO. S33WMLRP, S343MSWC, S043MSWC

GENERAL CONDITIONS
GENERAL REQUIREMENTS
TECHNICAL SPECIFICATIONS
APPENDICES

JANUARY 2026
100% DESIGN SUBMITTAL

City of Los Angeles
California

Department of Public Works
Bureau of Engineering

ENGINEERING
CITY OF LOS ANGELES

THIS PAGE INTENTIONALLY LEFT BLANK

BUREAU OF ENGINEERING
MACARTHUR LAKE STORMWATER CAPTURE PROJECT
WORK ORDER NO. S33WMLRP, S343MSWC, S043MSWC

DISCIPLINES RESPONSIBLE FOR SPECIFICATIONS

Julia Christine Schmitt
Carollo Engineers
General, Mechanical



Courtney Semlow
Craftwater Engineering, Inc.
Civil



Signed: January 22, 2026

Kwasi M. Duose
Carollo Engineers
Structural



Jan Dyer
Studio-MLA
Landscape

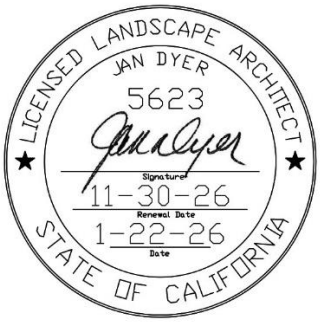

Signed: January 22, 2026

Robert D. Getter
ProjectLine Technical Services
Mechanical



Signed: January 22, 2026

Robert D. Getter
ProjectLine Technical Services
Electrical, Instrumentation/Controls



Signed: January 22, 2026

TABLE OF CONTENTS

GENERAL CONDITIONS

DIVISION 00 - GENERAL CONDITIONS

00010 GENERAL CONDITIONS

GENERAL REQUIREMENTS

DIVISION 01 - GENERAL REQUIREMENTS

SUMMARY

01111 ABBREVIATIONS AND REFERENCE STANDARDS
01112 DESCRIPTION OF WORK
01113 DIVISIONS OF TECHNICAL SECTIONS OF PROJECT MANUAL
01114 ISSUANCE OF DRAWINGS AND THE PROJECT MANUAL
01115 MANDATORY PROVISIONS
01116 ELECTRONIC DOCUMENT CONTROL
01120 INTERFACE / COORDINATION REQUIREMENTS
01140 CONTRACTOR'S USE OF THE PREMISES
01150 STORAGE OF MATERIALS AND EQUIPMENT

PRICE AND PAYMENT PROCEDURES

01212 FIXED CASH ALLOWANCE ITEMS
01251 CHANGE ORDER REQUESTS
01253 DIFFERING SITE CONDITIONS
01254 CHANGE ORDERS
01255 PRICE REDUCTION FOR DEFECTIVE COST OR PRICING DATA
01270 MEASUREMENT OF QUANTITIES FOR UNIT PRICE WORK
01280 MEASUREMENT AND PAYMENT
01291 NOTICE TO WITHHOLD AND/OR STOP NOTICE
01292 PAYMENTS
01298 SCHEDULE OF VALUES / CONTRACT PRICE BREAKDOWN

ADMINISTRATIVE REQUIREMENTS

01311 PRECONSTRUCTION SAFETY CONFERENCE
01312 PROJECT MEETINGS
01313 WORK BY CITY OR OTHERS
01321 CONTRACTOR'S CONSTRUCTION SCHEDULE AND REPORTS
01322 CONSTRUCTION PROGRESS PHOTOGRAPHY
01323 CONSTRUCTION STATUS REPORTS
01330 SHOP DRAWINGS / SUBMITTALS
01350 AUDIT AND ACCESS TO RECORDS
01351 ESCROW BID DOCUMENTS
01353 OPPORTUNITY TO PARTNER

QUALITY REQUIREMENTS

01410 REGULATORY REQUIREMENTS
01411 CONFINED SPACE ENTRY
01420 UNITS OF MEASURE
01421 SYMBOLS
01430 MANUFACTURER'S FIELD SERVICES
01451 APPROVAL OF ELECTRICAL EQUIPMENT
01452 INSPECTION OF THE WORK
01453 SAMPLING, TESTING AND FABRICATION INSPECTION
01454 WEIGHING AND METERING EQUIPMENT
01455 CALIBRATION OF TESTING EQUIPMENT

TEMPORARY FACILITIES AND CONTROLS

01561 ENVIRONMENTAL CONTROL
01562 ENVIRONMENTAL MITIGATION OR CONDITIONS
01563 POLLUTION CONTROL - SEWAGE SPILL PREVENTION AND RESPONSE REQUIREMENTS
01571 STORMWATER POLLUTION CONTROL MEASURES FOR CONSTRUCTION ACTIVITIES
01572 CONSTRUCTION AND DEMOLITION WASTE MANAGEMENT
01573 EXCAVATION, SHORING, FORMS, AND FALSEWORK
01581 PROJECT SIGNS

PRODUCT REQUIREMENTS

01601 BUY CLEAN CALIFORNIA ACT
01611 GUARANTY / WARRANTY
01630 SUBSTITUTIONS AND "OR EQUAL" SUBMITTAL

EXECUTION REQUIREMENTS

01711 SITE INVESTIGATION
01712 SUBSURFACE DATA
01721 MOBILIZATION
01722 SURVEYING
01723 RIGHT OF WAY
01731 CUTTING AND PATCHING
01740 REMOVAL, CLEANUP, AND DEMOBILIZATION
01750 STARTUP ASSISTANCE
01770 PROJECT CLOSEOUT
01781 SPARE PARTS
01782 TECHNICAL MANUALS
01783 PROJECT RECORD DOCUMENTS

FACILITY OPERATION

01810 FUNDAMENTAL COMMISSIONING REQUIREMENTS
01813 PREFUNCTIONAL CHECKLISTS
01820 OPERATIONS AND MAINTENANCE TRAINING

TECHNICAL SPECIFICATIONS

DIVISION 02 - SITE WORK

02210 CLEARING, GRUBBING AND STRIPPING
02220 SITE DEMOLITION
02235 DEWATERING
02240 SHEETING, SHORING, AND BRACING SYSTEMS
02310 EARTHWORK
02433 BACKFILL GROUTING
02445 ACCESS PIT EXCAVATION SUPPORT SYSTEMS
02446 SHAFT EXCAVATION SUPPORT
02455 CAST-IN-PLACE DRILLED PILES
02480 STEEL SHEET PILES
02501 MAINTENANCE AND SUPPORT OF UTILITIES
02515 WATER PIPELINE TESTING
02525 SANITARY SEWER SYSTEM TESTING
02545 STORM DRAIN SYSTEM
02585 MAINTENANCE HOLE AND PRECAST VAULT CONSTRUCTION
02666 HIGH DENSITY POLYETHYLENE GEOMEMBRANE LINERS
02710 YARD WORK AND STREET WORK
02810 IRRIGATION SYSTEM
02820 SLIDING GATES AND OPERATORS
02839 PREFABRICATED HALF THROUGH TRUSS PEDESTRIAN BRIDGE
02900 LANDSCAPING
02930 LANDSCAPE MAINTENANCE
02939 PLANT PROTECTION AND PRUNING
02955 RESTORATION OF UNDERGROUND PIPING

DIVISION 03 - CONCRETE

03100 CONCRETE FORMWORK
03200 REINFORCEMENT STEEL
03250 CONCRETE ACCESSORIES
03290 JOINTS IN CONCRETE
03300 CAST-IN-PLACE CONCRETE
03315 GROUT
03370 CONCRETE CURING
03400 PRECAST CONCRETE

DIVISION 05 - METALS

05120 STRUCTURAL STEEL
05300 METAL DECK
05500 METAL FABRICATIONS

DIVISION 06 - WOOD AND PLASTICS

06100 ROUGH CARPENTRY

DIVISION 07 - THERMAL AND MOISTURE PROTECTION

07900 JOINT SEALANTS
07920 CAULKING AND SEALANTS

DIVISION 09 - FINISHES

09800 PROTECTIVE COATING

DIVISION 11 - EQUIPMENT

11000 EQUIPMENT GENERAL PROVISIONS
11300 PUMPS, GENERAL
11310 VARIABLE SPEED DRIVES, GENERAL
11430 VERTICAL TURBINE PUMPS
11510 SUBMERSIBLE NON-CLOG PUMPS
11820 SLIDE GATES

DIVISION 13 - SPECIAL CONSTRUCTION

13470 TEMPORARY ODOR CONTROL SYSTEMS

DIVISION 15 - MECHANICAL

15050 BASIC MECHANICAL MATERIALS AND METHODS
15119 ELECTRIC MOTOR ACTUATORS FOR VALVES AND SLIDE GATES
15270 MECHANICAL SYSTEMS COMMISSIONING
15280 MECHANICAL TESTING REQUIREMENTS
15320 ELECTRICAL REQUIREMENTS FOR MECHANICAL EQUIPMENT
15340 HANGERS AND SUPPORTS
15360 METERS AND GAGES
15610 PIPING, GENERAL
15615 VALVES, GENERAL
15620 PIPE SYSTEM TESTING
15640 POLYVINYL CHLORIDE (PVC) PIPE, FITTINGS, AND VALVES
15700 DUCTILE IRON PIPE, FITTINGS, AND VALVES
15720 STEEL PIPE - FABRICATED SPECIALS
15770 PIPE SUPPORTS AND MECHANICAL JOINT RESTRAINTS
15780 PIPING IDENTIFICATION SYSTEMS
15830 MISCELLANEOUS VALVES

DIVISION 16 - ELECTRICAL

16020 MUNICIPAL FACILITIES GENERAL ELECTRICAL REQUIREMENTS
16100 BASIC MATERIALS AND METHODS
16110 CONDUITS AND RACEWAYS
16150 CONDUCTORS, 600 VOLTS AND BELOW
16170 CABINETS AND RACKS
16180 WIRING DEVICES
16190 ELECTRICAL IDENTIFICATION

16200 MOTOR CONTROL CENTERS
16210 SWITCHES, DISCONNECT AND SAFETY
16280 SHORT CIRCUIT AND COORDINATION REPORT
16290 MUNICIPAL FACILITIES GROUNDING SYSTEMS
16310 VARIABLE FREQUENCY DRIVE UNITS
16330 PANELBOARDS
16340 LOW VOLTAGE MOTOR CONTROL
16380 MUNICIPAL FACILITIES UNINTERRUPTIBLE POWER SYSTEM
16490 ELECTRIC MOTORS
16560 MUNICIPAL FACILITIES ELECTRICAL SYSTEMS COMMISSIONING
16570 MUNICIPAL FACILITIES ELECTRICAL TESTING REQUIREMENTS

DIVISION 17 - INSTRUMENTATION AND CONTROL

17100 METERS, GENERAL
17160 MAGNETIC FLOW METERS
17240 AREA-VELOCITY FLOW METERS
17400 PROCESS INSTRUMENTATION AND CONTROL
17450 SCADA NETWORK AND COMMUNICATIONS

ATTACHMENTS

ATTACHMENT 1 PHASING PLAN
ATTACHMENT 2 SOIL INVESTIGATION: NINYO & MOORE GEOTECHNICAL EVALUATION REPORT
ATTACHMENT 3 SUMMARY OF FIRST UTILITY NOTICE REPLIES
ATTACHMENT 4 SITE SURVEY AND AS-BUILT PLANS FOR LAKE AND 7TH STREET
ATTACHMENT 5 AS-BUILT PLANS FROM METROLA PROJECT
ATTACHMENT 6 REQUIREMENTS FOR MITIGATION MONITORING
ATTACHMENT 7 ENVIRONMENTAL COMPLIANCE PLAN
ATTACHMENT 8 EDUCATIONAL SIGN

THIS PAGE INTENTIONALLY LEFT BLANK

BUREAU OF ENGINEERING

MACARTHUR LAKE STORMWATER CAPTURE PROJECT
WORK ORDER NO. S33WMLRP, S343MSWC, S043MSWC

GENERAL CONDITIONS

JANUARY 2026
100% DESIGN SUBMITTAL

City of Los Angeles
California

Department of Public Works
Bureau of Engineering

ENGINEERING
CITY OF LOS ANGELES

THIS PAGE INTENTIONALLY LEFT BLANK

GENERAL CONDITIONS
TABLE OF CONTENTS

ARTICLE Page

00100 DEFINITIONS (9/18/07) 3
00101 – 00199 NOT USED 8
00200 SCOPE (10/17/01) 8
00201 AUTHORITY OF THE BOARD, ENGINEER, AND INSPECTOR (5/2/02) 8
00202 INTENT OF CONTRACT DOCUMENTS (2/09/95) 8
00203 NOT USED (9/18/07) 9
00204 PLANS AND SPECIFICATIONS (9/18/07) 9
00205 PRECEDENCE OF CONTRACT DOCUMENTS (9/18/07) 9
00206 ACCURACY OF PLANS AND SPECIFICATIONS (12/6/01) 10
00207 EXAMINATION OF COVERED WORK (12/6/01) 10
00208 UNNOTICED DEFECTS (10/17/01) 10
00209 CODES AND REGULATIONS (10/17/01) 10
00210 LENGTH OF WORKDAY AND WORK WEEK (9/18/07) 11
00211 PAYMENT OF EMPLOYEES (12/6/01) 11
00212 CONVICT-MADE MATERIALS (12/6/01) 11
00213 SALES OR USE TAX / EXEMPTION FROM FEDERAL EXCISE TAX (10/17/01) 11
00214 NONDISCRIMINATION IN EMPLOYMENT (10/17/01) 12
00215 APPRENTICE UTILIZATION (4/12/95) 12
00216 LAWS AND REGULATIONS (9/18/07) 12
00217 PERMITS AND CONSTRUCTION EASEMENTS (9/18/07) 12
00218 PARTIES EXCLUDED FROM FEDERAL PROCUREMENT AND NON PROCUREMENT PROGRAMS (10/17/01) 13
00219 BUSINESS TAX REGISTRATION CERTIFICATES (11/21/01) 13
00220 CONTRACTOR PROPOSED ALTERNATES AND “OR EQUALS” (12/6/01) 13
00221 CONTRUCTION AND DEMOLITION WASTE MANAGEMENT (8/12/11) 14
00222 – 00299 NOT USED 14
00300 FINANCIAL LIABILITY (4/12/95) 14
00301 CONTRACTOR’S OBLIGATIONS (3/21/14) 14
00302 CONTRACTOR’S REPRESENTATIVE AT THE SITE (1/30/03) 15
00303 FAMILIARITY WITH PLANS AND SPECIFICATIONS (9/18/07) 16
00304 JOB CONDITIONS (9/18/07) 16
00305 JOB BULLETIN BOARD (11/27/01) 17
00306 RESPONSIBILITY FOR SITE (10/17/01) 17
00307 WORKMANSHIP AND MATERIALS (4/12/95) 17

00308 INJURY AND ILLNESS PREVENTION - SAFETY MEASURES (9/18/07) 17
00309 PROTECTION OF PERSONS AND PROPERTY AND RESTORATION OF EXISTING IMPROVEMENTS (1/05/10) 18
00310 NON-CONFORMING WORK (1/30/03) 21
00311 SUBCONTRACTORS AND SUB-SUBCONTRACTORS (10/28/14) 21
00312 RESPONSIBILITY OF CONTRACTOR TO ACT IN EMERGENCY (11/21/01) 26
00313 ASSIGNMENT (2/09/95) 26
00314 NOTIFICATION OF HAZARDOUS SUBSTANCES (10/17/01) 26
00315 INDEPENDENT CONTRACTOR (10/21/99) 27
00316 INDEMNIFICATION (10/17/01) 27
00317 INSURANCE (1/05/10) 28
00318 SERVICE OF NOTICE (2/09/94) 32
00319 AGENT TO ACCEPT SERVICE (10/21/99) 33
00320 – 00399 NOT USED 33
00400 TEMPORARY SUSPENSION OR DELAY OF WORK (9/18/07) 33
00401 UNAVOIDABLE DELAY (10/17/01) 34
00402 ARCHAEOLOGICAL AND PALEONTOLOGICAL DISCOVERIES (9/18/07) 34
00403 COORDINATION WITH OTHER CONTRACTS (1/30/03) 34
00404 TERMINATION OF CONTRACT BY CITY (CONTRACTOR NOT AT FAULT) (9/18/07) 35
00405 TERMINATION OF CONTRACT BY CITY (CONTRACTOR DEFAULT) (9/18/07) 37
00406 PARTIAL ACCEPTANCE (9/18/07) 38
00407 FINAL ACCEPTANCE (02/21/08) 39
00408 LIQUIDATED DAMAGES (9/18/07) 39
00409 – 00499 NOT USED 40
00500 CHANGES AND EXTRA WORK (9/18/07) 40
00501 DIFFERING SITE CONDITIONS (9/18/07) 41
00502 – 00599 NOT USED 41
00600 CLAIMS AND PROTESTS (9/18/07) 42
00601 COMMENCEMENT OF STATUTE OF LIMITATIONS (11/21/01) 44
00602 GOVERNING LAW (11/21/01) 44
00603 VENUE (2/09/95) 44
00604 NO WAIVER OF RIGHTS (4/12/95) 44
00605 ACCEPTANCE OF FINAL PAYMENT CONSTITUTES RELEASE (4/12/95) 44
00606 PATENTS AND COPYRIGHTS (10/17/01) 44
00607 PUBLIC RECORDS ACT (4/06/00) 45

00100 DEFINITIONS (9/18/07)

Unless otherwise stated, the words "directed, required, permitted, ordered, instructed, designated, considered necessary, prescribed, approved, acceptable, satisfactory," or words of like meaning, refer to actions, statements, judgments, conclusions, and decisions within the responsibility of the Engineer or the Inspector.

Addenda: Written documents issued during the Bidding Period which modify, supersede, or supplement the original Contract Documents.

Additions and Amendments to the Standard Specifications for Public Works Construction (SSPWC): Also known as the “Brownbook”. Previous editions of the document were titled Standard Plan S-610.

“as shown”, “as indicated”, or “as specified”: These words are understood to be followed by the phrase "in the Contract Documents."

Bid: The offer of the Bidder submitted on the prescribed forms setting forth the price(s) for the Work.

Bid Proposal: The notice that informs prospective Bidders of the opportunity to submit a Bid, bidding procedures and other requirements.

Bid Guaranty: The certified check or Bidder’s Surety Bond accompanying the Bid as a guaranty that the Bidder will enter into a contract with the Board for the performance of the Work.

Bidder: The person or persons, partnership, firm or corporation submitting a Bid or proposal for the Work defined in the Contract Documents.

Bidding Period: The time period allocated to the Bidder to enable preparation of a Bid.

Board: The Board of Public Works, of the City of Los Angeles.

Bond: Bid bond, performance and payment bond or other instrument of security.

“Brownbook”: City of Los Angeles, Department of Public Works, Additions and Amendments to the SSPWC.

Calendar day: All days beginning with the date specified in the Notice to Proceed, and ending with the date the City issues the Statement of Completion.

Change Order: A written order to the Contractor signed by the Engineer directing an addition, deletion or revision in the Work, or an adjustment in the Contract Price or time which is issued after the effective date of the Contract and effects less modification than is affected by a Supplemental Agreement. A Change Order may or may not also be signed by the Contractor.

County Sealer: The Director of Weights & Measures of the County of Los Angeles.

City: The City of Los Angeles, a municipal corporation.

Claim: A written demand or assertion by one of the parties seeking, as a matter of right, an interpretation of the Contract Documents, payment of money, extension of time or other relief. The party asserting the Claim must set forth the facts and circumstances for which the other party is responsible.

Code: Codes of the State of California as well as any other Federal or local law, statute, ordinance, rule or regulation.

Contract: The agreement between the City and the Contractor for the Work described in the Contract Documents.

Contract Documents: Includes, but is not limited to, the Notice Inviting Bids, Bid Proposal, Notice(s) to Bidders, Contractor's Bid, Performance bond, Payment bond, General and Supplementary Conditions, Special Provisions, General Requirements, Federal and State Requirements, Standard and Reference Specifications, Technical and Nontechnical Specifications, Geotechnical Baseline Report, Geotechnical Design Summary Report, Soil Reports and Subsurface Investigation Reports, Standard Plans, Plans, Summary of First Notice Replies, and Addenda, Plan Clarifications, Request for Information, Supplemental Agreements, Change Orders issued after Contract award and other documents designated by the Engineer.

Contract Price: The total amount of money for which the Contract is awarded.

Contract Unit Price: The amount stated in the Bid for a single unit of an item of Work.

Contractor: A person or persons, partnership, firm or corporation licensed by the State of California as a general contractor. The terms "Prime Contractor" and Contractor are synonymous.

Contractor's Representative: A representative of the Contractor present at the site to supervise, organize, coordinate and direct daily construction activities and who is authorized to receive and fulfill instructions from the Engineer or Inspector.

"days": Consecutive calendar days unless otherwise specifically stated.

Drawings: See Plans.

"easement": Permission to access or utilize property not owned by the City.

Engineer: The City Engineer, head of the Bureau of Engineering, or an authorized representative.

Equal: See "or equal".

Final Field Acceptance: Verification by the Final Inspector that all physical corrections required by the Final Inspection Correction List have been completed. This verification will be evidenced by the issuance of a Statement of Completion, which will establish the date of the completion of the Work.

GBR: See Geotechnical Baseline Report.

GDR: See Geotechnical Data Report.

General Conditions: Instructions to the Contractor setting forth its responsibilities and the City's responsibilities for proper execution of the Work indicated herein.

General Requirements: Division 1 of the Specifications.

Geotechnical Baseline Report: This report establishes the baselines for geotechnical conditions anticipated to be encountered during underground and subsurface construction. This report establishes the basis for identification of changed site/ground conditions.

Geotechnical Data Report: This report contains information gathered during exploration and design. It may include logs of exploratory borings, laboratory test data, and geologic, seismic or environmental data.

“Greenbook”: Standard Specifications for Public Works Construction (SSPWC) published by Public Works Standards, Inc, latest edition.

“holiday”: In reference to days, the holidays and dates as observed by the City. A list of such holidays is available from the Board office.

Illegal Subcontractor Substitution: Anyone other than the Bid-listed or approved subcontractor(s) performing any portion of the Work designated to be performed by said subcontractor without prior approval of the Inspector.

“immediately notify”: The obligation to cause verbal notification of Engineer and Inspector of some condition or event as soon as possible upon discovery or knowledge of the condition or event and in all instances, no more than two (2) hours.

Inspector: The Inspector of Public Works, (Director of the Bureau of Contract Administration), or an authorized representative designated by the Bureau of Contract Administration.

“jobsite”: The area upon or in which the Contractor’s operations are carried on and such other areas adjacent thereto as may be designated as such by the Contract Documents.

“law”: Any Federal, State or local law, statute, ordinance, rule, regulation or Code.

“liquidated damages”: The amount the Contractor shall pay to the City, as determined by rates and amounts as fixed in the Contract Documents, due to the Contractor’s failure to complete the Work within the time specified.

“non-conforming work”: Unapproved construction, defective work or damaged materials that does not fully comply with the Contract Documents.

Notice of Award: The written notice by the City to the successful Bidder stating that upon compliance by the successful Bidder of required conditions, the City will execute the Contract.

Notice to Proceed: The written notice by the City to the successful Bidder stating that the Work or portions of the Work shall commence.

Notice to Withhold: The written notice by the City to the Contractor advising that certain payments shall be withheld due to unacceptable execution of the Work by the Contractor.

“or equal”: In reference to products, equipment, or materials proposed by the Contractor for use in the Work.

Partial Acceptance: Any portion of the Work that has been completed in accordance with the plans and specifications and has been accepted in writing by the Inspector ("Statement of Partial Completion" form).

"person": Any individual, firm, association, partnership, corporation, trust, joint venture, or other legal entity.

Plans: The drawings, profiles, cross sections, shop drawings, and supplemental drawings, or reproductions thereof, issued or approved by the Engineer, which show the location, character, dimensions or details of the Work.

Private Contract: Work subject to City inspection, control, and approval, involving private funds, not administered by the City.

Project: The Work and/or construction operations executed through the performance of this Contract.

Project Manual: See Contract Documents.

Protest: See Claim.

Reference Specifications: Those bulletins, standards, rules, methods of analysis or test, codes, and specifications of other agencies, engineering societies, or industrial associations referred to in the Contract Documents. These refer to the edition, including amendments in effect and published at the time of advertising the project, adopted by the Board, if applicable, unless specifically referred to by edition, volume, or date.

"right of entry": Written permission from an owner of a facility or property to access the facility or property for a specific purpose.

Special Provisions: Any provision which supplements or modifies the Specifications.

Specifications: Written requirements describing the commercial, legal, technical and nontechnical aspects of the project. Specifications include but are not limited to Terms, Provisions, General Conditions, General Requirements, Technical Specifications, Equipment Schedules, and all revisions made to the specifications in Addenda, and Change Orders.

Standard Plans or "Std. Plan": Details of standard structures, devices or instructions referred to on the Plans or in the Specifications by title or number.

State: The State of California.

Statement of Completion: A form issued by the Bureau of Contract Administration following Final Inspection and upon completion of all physical corrections required by the Final Inspection Correction List. This shall signify the acceptance of all fieldwork and establish the date of completion of the Work.

Statement of Partial Completion: A form issued by the Bureau of Contract Administration following Partial Final Inspection and upon completion of all physical corrections required by the Partial Final Inspection Correction List. This shall signify the acceptance of a specific portion, or portions, of the Work to be so utilized or otherwise placed into service.

Subcontractor: Any individual, firm, or corporation, other than an employee of the Contractor, having a direct contract with the Contractor or with any other subcontractor for the performance of the Work. A Subcontractor is a contractor who is licensed pursuant to California Business and Professions Code, Section 7000 et. seq. A Subcontractor does not have any direct contract with the City related to the project.

Subcontractor Substitution: Anyone other than the Bid-listed or approved subcontractor(s), including the Contractor, performing any portion of the Work designated to be performed by said subcontractor.

Sub-subcontractor: A "Sub-Subcontractor" is a Subcontractor, within the definition of that term, who has a contract with a Subcontractor and has no Contract with the City related to the project.

Supervision: With reference to supervision by the Engineer, the performance of obligations, and the exercise of rights, specifically imposed upon and granted to the City in becoming a party to the Contract. Except as specifically stated herein, supervision by the City shall not mean active and direct superintendence of details of the Work.

Supplemental Agreement: A written amendment of the Contract Documents, signed by the Contractor and City.

Supplier: An individual, organization, or firm who may not be required for the purposes of the Work to be licensed pursuant to California Business and Professions Code as a contractor, or subcontractor, within the meanings of those terms as defined herein above, who provides equipment and/or materials for the Work, to the Contractor, a Subcontractor, or a Sub-Subcontractor, including that fabricated to a special design, but who does not perform labor at the site except for labor or labor supervision required by some manufacturers as part of their equipment installation for warranty or other purposes. The term "supplier" also includes fabricator, manufacturer, or vendor.

Surety: Any individual, firm or corporation bound with and for the Contractor for the acceptable performance, execution and completion of the Work, and for the satisfaction of all obligations incurred.

Unauthorized Subcontractor Substitution: Any reduction, increase, or other change to any Subcontractor dollar amount without written approval by the Inspector.

Unavoidable Delay: Delay arising from causes beyond the control and without the fault or negligence of the Contractor and its Subcontractors at all tiers, and solely due to acts of God, acts of government in its sovereign capacity, riots, insurrections, wars, fires, floods, earthquakes, tidal waves, epidemics, quarantine restrictions, industry-wide strikes, freight embargoes, or unusually severe weather.

Work: Includes all material, labor, utility services, tools, expendable equipment, and all appliances, machinery, transportation, appurtenances and specified services necessary to perform and complete the Contract; and such additional items not specifically indicated or described that can be reasonably inferred as belonging to the item described or indicated and as required by good practice to provide a complete and operable satisfactory system or structure. As used herein, "provide" shall be understood to mean "furnish and install, complete in place."

Workday: All days beginning with the date specified in the Notice to Proceed, and ending with the date the City issues the Statement of Completion, except for the following days:

A) Saturday,

B) Sunday,

C) any day designated as a holiday by the City,

D) any day designated as a holiday in a Master Labor Agreement binding the Contractor,

E) any day the Contractor is prevented from working for cause as established by “Unavoidable Delay” of these General Conditions; and

F) any day the Contractor is prevented from working during the first five (5) hours of the workday with at least sixty percent (60%) of the normal Work force for cause as established by “Unavoidable Delay” of these General Conditions.

Worksite: See "jobsite."

00101 – 00199 NOT USED

00200 SCOPE (10/17/01)

The work to be performed under this Contract shall consist of furnishing all tools, equipment, materials, supplies and manufactured articles, all transportation, services, including fuel, power and water, and essential communications, and the performance of all labor, Work, required calculations testing, inspections or operations, or operations required for the fulfillment of the Contract, in strict accordance with the specifications, schedules, and Plans, all of which are made a part hereof, and including such detail sketches as may be furnished by the Engineer from time to time during the construction in explanation of said Plans. The Work shall be complete and all material, and services incidentals, quality or not specifically called for quality and conditions noted, in the Specifications, or not shown on the Plans, which may be necessary for complete and proper construction to carry out the Contract in good faith and a satisfactory manner shall be performed, furnished, and installed by the Contractor at no increase in cost to the City.

00201 AUTHORITY OF THE BOARD, ENGINEER, AND INSPECTOR (5/2/02)

The Board has the final authority in all matters affecting the Work. The Contractor shall promptly comply with instructions from the Engineer or the Inspector.

The Engineer is authorized to require performance of the Work consistent with the meaning of the Plans and the Contract Documents. On all questions related to the interpretation of Plans or Specifications, the decision of the Engineer is final and binding. As authorized by the Board, the Engineer may issue Change Orders to increase, decrease or modify the scope of work.

The Inspector is authorized to enforce compliance with the Contract Documents, to determine the acceptability, quality and quantity of materials and workmanship, administer requirements with respect to subcontracts, and to prepare and process progress payment estimates. Unless otherwise ordered by the Board, the Inspector’s determination of satisfactory performance is a condition precedent to payment under this Contract. For such matters, the decision of the Inspector is final and binding. In the event of a dispute between the Contractor and the Inspector, the latter is authorized to reject materials or suspend the Work until any questions at issue can be referred to and decided by the Board or, in engineering matters, by the Engineer.

The Inspector is authorized to sample and test all materials to be incorporated into the Work. The Inspector may delegate this authority to sample materials and perform tests to the Department of General Services, Standards Division, or other approved agencies.

The Engineer may delegate street lighting matters to the Director of the Bureau of Street Lighting.

00202 INTENT OF CONTRACT DOCUMENTS (2/09/95)

The Contract Documents are complementary, and what is called for by one part shall be as binding as if called for by all. The intent of the Documents is to include all Work consistent therewith and reasonably inferable therefrom as being necessary for completion of the contract. Materials or Work described in words that indicate the proper execution and a well-known technical or trade designation shall be held to refer to such recognized standards.

It is understood and agreed that the written terms and provisions of the Contract Documents represent the entire and integrated agreement between the parties hereto and supersede all prior negotiations, representations, or agreements, either written or oral. The Contract Documents shall not be construed to create any contractual relationship of any kind between the Engineer (or the Inspector) and the Contractor.

00203 NOT USED (9/18/07)

00204 PLANS AND SPECIFICATIONS (9/18/07)

As shown on the Plans or described in the Specifications, each element of the Work must be furnished complete, finished, and functional. Whether shown or not, include all materials and ancillary equipment necessary to provide a complete installation. The Plans, Specifications and other Contract Documents are intended to be complementary and cooperative to describe and provide a complete project. Anything in the Specifications and not on the Plans, or on the Plans and not in the Specifications, shall be as though shown or mentioned in both. Details shown for an item of Work are typical and shall apply to similar items of Work.

Do not deviate from the Plans and Specifications without written authorization from the Engineer.

The Engineer does not warrant the accuracy of scaled dimensions. Dimensions indicated by figures or numerals shall govern. Larger scale drawings shall take precedence over smaller scale drawings. Detailed drawings will take precedence over general drawings.

The Engineer may furnish additional details pertaining to the Work and the same shall be considered part of the Contract.

References made to other specifications and codes refer to the edition including amendments in effect and published at the time of advertising the project, unless specifically referred to by edition, volume, or date as noted in the Contract Documents.

00205 PRECEDENCE OF CONTRACT DOCUMENTS (9/18/07)

In resolving inconsistencies or ambiguities among two (2) or more components of the Contract Documents, the more stringent requirements shall prevail. The secondary priority will be based upon the precedence of the documents. The precedence shall be:

1. Permits from other agencies may be required by law.

2. Bid Proposal

3. General Conditions

4. General Requirements

5. Technical Specifications

6. Plans

7. Geotechnical Baseline Report

8. Geotechnical Data Report

9. Brownbook

10. Greenbook

11. Standard Plans

12. Reference Specifications

13. Reference Plans

Supplemental Agreements, Change Orders, Engineer's written interpretations and clarifications, and Addenda, will take precedence over all other components of the Contract Documents.

00206 ACCURACY OF PLANS AND SPECIFICATIONS (12/6/01)

Omissions from the Plans and Specifications shall not relieve the Contractor from the responsibility of furnishing, making, or installing all items required by law or usually furnished, made, or installed in a project of the scope and character indicated by the Plans and Specifications.

The Plans show conditions as they are supposed or believed by the Engineer to exist, but it is not intended or to be inferred that the conditions as shown thereon constitute a representation or warranty, expressed or implied, by the City or its officers, that such conditions are actually existent, nor shall the City, or any of its officers, be liable for any loss sustained by the Contractor as a result of any variance between conditions as shown on the Plans, and the actual conditions revealed during progress of the Work or otherwise, except as indicated in "Differing Site Conditions" of these General Conditions.

00207 EXAMINATION OF COVERED WORK (12/6/01)

If any Work is covered without inspection, approval or consent of the Inspector, an examination may be required by the Inspector. The cost for uncovering the work, inspection, testing required by the Inspector, remedial work and restoring the work is at the Contractor's expense.

00208 UNNOTICED DEFECTS (10/17/01)

The Contractor is responsible for ensuring that all Work complies with the Contract Documents. Upon discovery, all defective or noncompliant Work must be immediately repaired or replaced by the Contractor. Failure by the Engineer or the Inspector to condemn or reject non-conforming Work shall not constitute acceptance or implied acceptance of such Work.

00209 CODES AND REGULATIONS (10/17/01)

The Contractor shall perform the Work in accordance with all applicable regulations, laws, and ordinances, even though such requirements may not be specifically mentioned in the Specifications or shown on the Plans.

It is not the responsibility of the Contractor to ensure that the Contract Documents comply with applicable laws, statutes, codes and regulations. If the Contractor believes that any part of the Contract Documents does not comply, the Contractor shall promptly notify the Engineer in writing. Do not proceed with those affected Work items until the Engineer issues written instructions to the Contractor.

If the Contractor proceeds with those Work items without written instruction from the Engineer, the Contractor will bear the costs and impacts of any corrective work.

00210 LENGTH OF WORKDAY AND WORK WEEK (9/18/07)

Eight (8) hours of labor shall constitute a calendar day's work for employees of the Contractor under this Contract. Said employees shall be paid not less than the prevailing wage rate for the first eight (8) hours work of each day.

Unless noted elsewhere in the Contract documents, a working day shall be Monday through Friday, and work shall be between 7:00 a.m. and 4:00 p.m., unless otherwise approved by the Engineer or the Board or revised by City Ordinance.

When work in excess of eight (8) hours per day, or forty (40) hours during any one (1) week is performed, wages for all hours over eight (8) hours in any day or over forty (40) hours during any one (1) week shall be paid at the prevailing wage rate, as required by City, state and federal requirements.

00211 PAYMENT OF EMPLOYEES (12/6/01)

The Contractor and each Subcontractor shall pay each employee engaged in Work on the project under this Contract in compliance with the Federal and State wage provisions indicated on the appropriate page of the Bid Proposal (General Instruction and Information for Bidders), and “Length of Workday and Work Week” of these General Conditions.

The certified payroll and the Statement of Compliance shall be submitted to the Inspector by the Contractor and all Subcontractors performing Work on the project, regardless of dollar amount or type of contract.

If there is a difference between the Federal and State minimum wage rates for similar classifications of labor, the Contractor and its Subcontractors shall pay not less than the higher wage rate. When the Contractor intends to use a craft or classification not shown on the general prevailing wage determinations, it will be required to pay the wage rate of that craft or classification most closely related to it as shown in the general prevailing wage determinations. In case of disagreement between the Contractor and the City, the Inspector shall make the final determination as to the prevailing wages for the Work.

00212 CONVICT-MADE MATERIALS (12/6/01)

Unless otherwise noted, no materials manufactured or produced in a penal or correctional institution shall be incorporated in the project under this Contract.

00213 SALES OR USE TAX / EXEMPTION FROM FEDERAL EXCISE TAX (10/17/01)

Purchases of materials and equipment which will be incorporated or installed permanently in the Work, or which will be used in the operation of the Contractor or Subcontractors, and not incorporated in the Work, are not exempt from City of Los Angeles and California State Sales or Use Taxes as applicable.

Purchase of materials and equipment which will be incorporated or installed permanently in the Work are exempt from Federal excise tax in effect at the time of purchase, as applicable. Prices included in the Contract amount shall reflect such exemptions. A Federal Tax Exemption Certificate will be furnished by the City, on request, as acknowledgment that materials and equipment for which exemption is requested by the Contractor, is valid where provided for the exclusive use of the City. Lists of exempt articles provided by the Contractor and Subcontractor shall be submitted to the City by the Contractor. Purchases of materials and equipment which will be used in the operations of the Contractor or Subcontractors and not incorporated in the Work are not exempt from excise tax.

00214 NONDISCRIMINATION IN EMPLOYMENT (10/17/01)

The Contractor shall comply with all of the provisions of the Los Angeles Administrative Code, Mandatory Provision Pertaining to Nondiscrimination in Employment.

The Contractor shall submit Monthly Ethnic Composition of Work Force Reports to the Inspector indicating the number of employees in the various work categories and ethnic groups and gender on forms furnished by the City.

Nondiscrimination Clause: "The Contractor shall not discriminate during the performance of this Contract against any employee or applicant for employment because of employee's or applicant's race, religion, national origin, ancestry, sex, age, sexual orientation or physical handicap." The Contractor shall include the same Nondiscrimination Clause in all subcontracts awarded under this Contract.

If conflicts exist between these provisions and the Federal Rules and Regulations governing the same, the more stringent requirements shall prevail.

00215 APPRENTICE UTILIZATION (4/12/95)

Any Contract awarded hereunder will require the Contractor to comply with the provisions of the California Labor Code relating to apprentice employment and training; and will require the Contractor to assume full responsibility for compliance with said section with respect to all Apprenticing Occupations involved in the Project. (Compliance with said Apprentice Utilization provisions of the Labor Code is not required for Public Works contracts involving less than $30,000 or less than twenty (20) Working days in duration).

00216 LAWS AND REGULATIONS (9/18/07)

The Contractor shall observe and comply with all Federal, State, and local laws, ordinances, Codes, orders, and regulations which in any manner affect those engaged or employed on the Work, the materials used in the Work, or the conduct of the Work. If any discrepancy or inconsistency should be discovered in this Contract in relation to any such law, ordinance, Code, order, or regulation, the Contractor shall report the same in writing to the Engineer. The Contractor shall indemnify and hold harmless the City, and its officers, agents, and employees, against all claims or liability arising from violation of any such law, ordinance, Code, order, or regulation, whether by itself or by its employees or Subcontractors as stated in these Contract Documents. Any law or regulation specified or referred to elsewhere in these specifications shall not in any way limit the obligation of the Contractor to comply with all other provisions of Federal, State, and local laws and regulations.

00217 PERMITS AND CONSTRUCTION EASEMENTS (9/18/07)

The Contractor shall obtain and pay for all permits necessary for performance of the Work. Within thirty (30) calendar days after the Notice to Proceed, the Contractor shall obtain and pay all costs incurred and submit to the Engineer copies of all permits required for the construction and installation of all Work called for on this project.

When the Bid Proposal provides an allowance for “Permits”, only certain types of permits and certain permit fees are reimbursable. The reimbursable permit must be exclusively for permanent Work shown on the Plans and reimbursement will be limited to the actual permit fee shown on the permit’s receipt. The allowance for “Permits” cannot be used for any other costs such as those necessary to physically obtain the permit. The allowance for “Permits” also cannot be used for contractor-designed items, annual permits, temporary construction, or general permits that are useable for other projects. The Contractor will only be reimbursed for those permits that are included in the list below, unless otherwise specified:

1) Night Work, overload, grading, excavation, demolition, foundation, and building permits.

2) Electrical permits.

3) Mechanical permits.

4) Plumbing permits.

5) South Coast Air Quality Management District permits.

6) Fire sprinkler permit.

7) All Federal, State, County and City issued permits.

Rights of ways, easements, or rights of entry for the Work will be provided by the City. The Contractor shall make arrangements, pay for, and assume all responsibility for acquiring, using, and disposing of Work areas and facilities temporarily required which are necessary in addition to those provided by the City. The Contractor shall indemnify and hold the City harmless for all claims for damages caused by such actions.

00218 PARTIES EXCLUDED FROM FEDERAL PROCUREMENT AND NON PROCUREMENT PROGRAMS (10/17/01)

A list of individuals, firms and organizations which have been debarred, suspended or have voluntarily excluded themselves from Federal Procurement and Non Procurement Program is maintained by US General Services Administration. A copy can be obtained from Superintendent of Documents, US Government Printing Office, Washington, DC 20402, Tel: (202) 783-3238.

The City will not conduct business with an individual, firm or organization, and the Contractor shall not employ or otherwise utilize any Subcontractor, supplier or equipment vendor at any tier which is on the U.S. General Services Administration "List of Parties Excluded from Federal Procurement and Non Procurement Programs". The Contractor shall not utilize or otherwise employ any Subcontractors or suppliers on the list of nonresponsible bidders maintained by the City Bureau of Contract Administration.

00219 BUSINESS TAX REGISTRATION CERTIFICATES (11/21/01)

The Contractor represents that it has, or will obtain upon award, the Business Tax Registration Certificate(s) required by the Los Angeles City Business Tax Ordinance. The Contractor shall maintain, or obtain as necessary, all such Certificates required of it under said Ordinance and shall not cause or allow any such Certificate to be revoked or suspended.

The City requires all firms that have business activity within the City of Los Angeles to pay City business taxes.

Payments for goods or services will be withheld unless proof of tax compliance is provided to the City. All firms and individuals that do business with the City will be required to provide a Business Tax Registration Certificate number or an exemption number as proof of compliance with Los Angeles City business tax requirements in order to receive payment for goods or services.

The Tax and Permit Division of the City Office of Finance has the sole authority to determine whether a firm is covered by business tax requirements.

00220 CONTRACTOR PROPOSED ALTERNATES AND “OR EQUALS” (12/6/01)

Unless otherwise noted, the Contractor may propose products, equipment, or materials to be an “or equal” to those specified in the Contract. These proposals must be submitted within thirty (30) days after

Notice to Proceed along with sufficient substantiating data for the Engineer to determine equivalence. The substantiating data must demonstrate equivalence in terms of function, performance, reliability, quality, and general configuration to the items specified in the Contract Documents. The Engineer will be the sole arbiter of equivalence. Proposals that are submitted late or with incomplete substantiation are "Not Equal" and subject to summary rejection.

Contractor-proposed "or equals" that are accepted by the Engineer shall be coordinated with other items of Work and incorporated into the Work without time extensions and at no additional cost to the City.

00221 CONTRUCTION AND DEMOLITION WASTE MANAGEMENT (8/12/11)

The Contractor shall divert all Construction and Demolition (C&D) waste generated from the project in accordance with the City's C&D Waste Recycling Ordinance. The Los Angeles Municipal Code requires that all mixed C&D waste material generated within the City of Los Angeles be taken to a City Certified C&D Waste Processor. Further, mixed C&D waste can only be legally collected, removed, or transported by City of Los Angeles Permitted Solid Waste Haulers. If the Contractor plans on collecting, removing, or transporting its own waste, it must first apply for and obtain a Solid Waste Hauler Permit from the Solid Resources Citywide Recycling Division of the Bureau of Sanitation.

Failure to meet the C&D waste recycling requirements as detailed above will result in the assessment of penalties up to $5,000 per load of C&D waste not taken to City Certified Processors. Further, collecting, removing or transporting C&D waste within the City without a valid Solid Waste Hauler Permit is a criminal misdemeanor subject to fines and/or imprisonment.

Other sections of the Specification may require specific recycling rates in addition to the Los Angeles Municipal Code requirements.

00222 – 00299 NOT USED

00300 FINANCIAL LIABILITY (4/12/95)

The City's liability under this Contract shall not exceed the City's appropriation to fund the Contract at the time of Contract award. However, if the City shall appropriate funds for any successive years, the City's maximum liability shall not exceed the extent of such appropriation, subject to the terms and conditions of this Contract.

00301 CONTRACTOR'S OBLIGATIONS (3/21/14)

Only competent workers shall be employed on the Work.

Any person employed who is found by the Engineer or the Inspector to be incompetent, disorderly or otherwise objectionable, or who fails or refuses to perform Work properly, acceptably and as directed shall be immediately removed from the Work by the Contractor and not be reemployed on the Work.

The Contractor, at its sole cost and expense, shall perform all labor and services and furnish all the materials, tools, and appliances, except as hereinafter otherwise definitely provided, necessary or proper for performing and completing the Work required, in the manner and within the time stipulated in these specifications. The Contractor shall furnish, erect, maintain, and remove the construction plant and such temporary works as may be required. If, at any time before the commencement or during the progress of the Work or any part of it, the Contractor's methods or appliances appear to the Engineer or the Inspector to be unsafe, inefficient, or inadequate for securing the safety of the workers, the quality of the Work required, or the rate of progress stipulated, the Engineer or the Inspector may order the Contractor to increase their safety and efficiency or to improve their character, and the Contractor shall comply with such orders at its own expense. Neither the making of such demands by the Engineer nor the failure to

make such demands shall relieve the Contractor of its obligation to secure the safe conduct of the Work, the quality of Work required, and the rate of progress stipulated in the Contract. The Contractor shall be fully responsible for the safety, efficiency, and adequacy of its plant, appliances, and methods, and for any damage which may result from their failure or their improper construction, maintenance, or operation.

All of the labor shall be performed, and materials furnished pursuant to and in strict conformance with the Contract Documents, and in accordance with approved shop drawings. The Contractor shall complete the entire Work to the satisfaction of the Inspector and in accordance with the Specifications and Plans mentioned herein, at the prices fixed in the Contract.

Where articles or materials are especially manufactured or fabricated for delivery under these specifications, the Contractor shall at all times employ such workforce, plant, materials, and tools as will be sufficient to complete the performance of the Contract and every part thereof within the time limits stipulated herein. If the Contractor fails to employ sufficient workforce, plant, materials, tools, or to maintain adequate progress, the Engineer may require an increase in progress at any point or points or a modification of Plans and procedure in such a manner as to accelerate the Work. Failure to adequately staff the project shall be just cause for the City to terminate the Contract.

00302 CONTRACTOR'S REPRESENTATIVE AT THE SITE (1/30/03)

A technically qualified and English-speaking project representative shall be designated in writing as the Contractor's Representative at the job site, who shall supervise the Work and shall provide competent supervision of the Work until its completion. The Contractor's Representative shall be assigned full-time and exclusively to this project. Alternate representatives with qualifications equal to or better than the previous representative may be designated. The Contractor's Representatives shall have at least five (5) years of verifiable experience as the person primarily responsible for supervision of the Work on projects of the same or similar size and nature as this project. Within five (5) days after the Notice of Award the Contractor shall provide a statement to the Engineer and the Inspector with the following:

1) Identification and resume, showing the qualifications and experience of the Contractor's Representative and the alternate appointed to act in the place of the Contractor's Representative.

2) References of not less than two (2) previous projects on which the Contractor's Representative and the alternate had supervisory responsibility on a project of a similar nature and at least one-half or more of the cost of this project. Such references shall include names, addresses, and telephone numbers of owner representatives who worked on the project as well as project information such as project type, size, location and duration.

The Engineer and the Inspector reserve the right to disapprove of any candidate named as the Contractor's Representative or alternate who fails to meet the provisions set forth herein. The Engineer and the Inspector reserve the right to remove, without any right to work on the project, either the Contractor's Representative or alternate, who in the sole opinion of the Engineer or the Inspector, has demonstrated incompetence, lack of ability, or other unsuitability to perform supervision of the Work.

If the Contractor's Representative or alternate leave the employ of the Contractor, the Contractor will be required to replace the individual(s) and fulfill the requirements of this Article within fifteen (15) calendar days. In no event shall any Work proceed in the absence of an approved representative.

The Contractor's Representative or alternate shall have full authority to act on behalf of the Contractor, including, but not limited to final approval of Change Orders and Supplemental Agreements. All directions given by the Engineer or the Inspector to said representative or alternate shall be considered as having been given to the Contractor. Such instructions given by the Engineer or the Inspector to the Contractor's Representative or alternate will be confirmed in writing. All instructions and directions given by the Engineer, or the Inspector will be limited to matters properly falling within the Engineer's or the Inspector's authority as specified in "Authority of the Board, Engineer and Inspector" of these General Conditions.

The Contractor's Representative or alternate shall be always present at the worksite while Work is in progress. Failure to observe this requirement constitutes a suspension of the Work by the Contractor, until such time the Contractor's Representative or alternate is again present at the worksite. All Work performed while the Contractor's Representative or alternate is absent from the worksite is ineligible for payment. Work performed in violation of these provisions shall be removed and reconstructed, refabricated, or reinstalled under the required supervision. The Contractor is ineligible for time extensions or additional payment for costs or impact that directly or indirectly are caused by said suspension. Those ineligible costs and impacts include what the Contractor may incur for slowdown, delays, idled equipment, removals, reconstruction, refabricating, reinstalling and other. During such periods of noncompliance when the Contractor's Representative is not on site, written instructions issued by the Engineer or the Inspector to *any* employee of the Contractor is considered adequate notice to the Contractor.

Whenever the Work is defined as being suspended under the provisions of this Article, any such suspension in excess of ten (10) calendar days shall constitute just cause for the City to terminate the Contract under the provisions of "Termination of Contract by City (Contractor Default)" of these General Conditions.

00303 FAMILIARITY WITH PLANS AND SPECIFICATIONS (9/18/07)

It shall be the responsibility of the Contractor to be thoroughly familiar with all details of the Project, including the work of the Contractor's forces and all Subcontractors. The Contractor shall call the following to the attention of both the Engineer and the Inspector in writing within twenty-four (24) hours of discovery, before any Work is performed:

1) Errors and omissions in the Plans and Specifications, including, but not limited to, code violations, typographical errors and notational errors where ambiguity or inadequate description exists;

2) Work on the Plans or in the Specifications which, if so constructed, would result in a conflict or interference with other Work or the Work of other trades, including the location of fixtures and equipment;

3) Existing improvements visible at the job site, for which no existing disposition is made on the Plans or in the Specifications but which could reasonably be assumed to interfere with the satisfactory completion of the improvements contemplated by the Plans and Specifications.

Failure to notify shall constitute a waiver by the Contractor of any claim for delay or other damages occasioned by such defect. If the Contractor proceeds with the Work without instructions from the Engineer, the incorrect Work shall be removed and corrections made to comply with the Engineer's instructions, at no cost to the City.

00304 JOB CONDITIONS (9/18/07)

The Contractor shall determine the nature and types of work to be performed, ascertain all conditions affecting construction procedure and sequencing of Work operations in the execution of the Work, including condition of available roads and streets, or clearances, restrictions and other limitations affecting transportation and ingress and egress to the job site. This determination must be made during the Bidding Period with any costs and impact included within the Bid.

The Contractor shall observe any "Site Security" restrictions described in the General Requirements or the Plans.

Whenever the Work requires entry into an operating plant, occupied building, working facility or other secured location, observe the following unless otherwise noted:

1) No vehicles are allowed except delivery trucks and Contractor's identified vehicles and equipment.

2) It shall be the Contractor's sole responsibility to arrange and pay for offsite employee parking and to provide transportation from the parking area to the Work site.

3) The Contractor shall fully cooperate with all authorities on the job site and other contractors not related to the Work of this Contract who might be at the job site.

4) The Contractor shall fully comply with all regulations in force at the job site.

00305 JOB BULLETIN BOARD (11/27/01)

When a Field Office is required, the Contractor shall provide and mount a Job Bulletin Board at the field office in a location where it can be readily seen by all of the Contractor employees. The bulletin board shall be substantially built to a minimum size of 900 mm high x 1200 mm wide (3' x 4') shall be fitted with a framed safety glass door and lock. The glass on the outside shall be protected with a 12 mm x 12 mm (½" x ½") galvanized wire mesh screen permanently attached to the frame. The bulletin board shall be finished inside and outside with two (2) coats of exterior paint.

00306 RESPONSIBILITY FOR SITE (10/17/01)

The Contractor is in full charge of and responsible for the job site and the Work. The "Interface/ Coordination Requirements" of the General Requirements describe interfaces with other contractors working on the job site. No other operations of any nature shall be performed except as specifically authorized in the Contract Documents or as authorized by the Engineer.

The Contractor shall exercise care not to damage improvements and adjacent land. The Contractor shall correct any damage caused within seventy-two (72) hours by restoring the land and improvements damaged to their original condition and shall indemnify and hold the City harmless for any such damage as specified in "Indemnification" of these General Conditions.

00307 WORKMANSHIP AND MATERIALS (4/12/95)

All materials, parts and equipment furnished by the Contractor for the Work shall be new, of a high grade and free from defects. Materials and work quality shall be subject to the Inspector's approval.

00308 INJURY AND ILLNESS PREVENTION - SAFETY MEASURES (9/18/07)

Safety is the responsibility of the Contractor. The Contractor shall observe and comply with the safety provisions of all applicable laws, building and construction Codes, safety and health regulations of the California Code of Regulations, and with applicable City Safety Policies.

Every employer (Prime Contractor and/or Subcontractor) employed on the Project shall establish, implement, and maintain an effective Injury and Illness Prevention Program in accordance with Section 3203 of the General Industry Safety Orders.

Each Contractor/Subcontractor shall make the applicable Injury and Illness Prevention Program specific for site conditions and type of Work to be performed on the Project.

Each prime Contractor and Subcontractor working on the Project shall make its Injury and Illness Prevention Program available to the Inspector and the Engineer prior to beginning any Work on the Project.

If a work procedure or site condition exists that violates the Contractor's/Subcontractor's Injury and Illness Prevention Program or any other safety standard, the Engineer or Inspector may order the Contractor to immediately comply with said safety provisions, and the Contractor shall comply with such orders at its own expense. If the Contractor fails to act promptly, the Engineer or Inspector is authorized to suspend the Work. Failure of the Engineer or the Inspector to make such demands shall not relieve the Contractor of its obligations to secure the safe conduct of the Work.

If a work procedure or site condition creates an immediate hazard to the health or safety of the public, City employees, property, or a licensee, the City may suspend all work on the project. Without prior notice, the City may also correct such hazardous conditions using other forces or contractors, at the Contractor's sole expense. Any delays or impacts arising on the Work because of such an emergency shall be at the sole expense of the Contractor with no time extension, additional reimbursement for extended overhead, or interest on monies due, allowed for the Contractor.

First aid facilities and supplies shall be kept and maintained by the Contractor at the site of the Work.

The Contractor shall cause all persons within the construction area to wear protective helmets. In addition, all employees of the Contractor and its Subcontractors shall be provided with, and required to use, personal protective and life saving equipment set forth in California Construction Safety Orders and the OSHA Safety and Health Standards for Construction.

The Contractor shall provide safety equipment, material, and assistance to City personnel to properly inspect all phases of the Work, including final inspection. Such equipment, material and assistance shall include, but not be limited to testing for the presence of explosive or toxic gases and oxygen deficiency in confined spaces, blowers, ventilators, first aid supplies and equipment, ladders, scaffolds, shoring, and personnel for standby assistance as required. Personal safety devices such as harnesses, lanyards, and self-contained breathing apparatus will be provided by the Bureau of Contract Administration, unless otherwise noted. When the Work requires specialized safety equipment, the Contractor shall provide new sets of such equipment, the training deemed necessary by the Inspector, and maintenance of such equipment. When asbestos is being removed, the requirements of the CCR, Title 8, Div. 1, Chapter 4, Subchapter 4, "Construction Safety Orders," and Subchapter 7, "General Industry Safety Orders," shall be implemented.

In cases involving exposure of City personnel to toxic/hazardous materials and/or elements, the City Personnel Department, Occupational Safety Office, shall have field review authority over the Contractor's operations.

For additional requirements, refer to "Safety and Preconstruction Safety Conference" of the General Requirements.

00309 PROTECTION OF PERSONS AND PROPERTY AND RESTORATION OF EXISTING IMPROVEMENTS (1/05/10)

The Contractor shall not destroy, remove, or otherwise disturb any existing survey monuments or reference points without authorization from the Engineer. No pavement breaking or excavation shall be started until all survey monuments or other reference points that will be disturbed by the construction operations have been properly referenced by the Engineer. It shall be the Contractor's responsibility to notify the Engineer and the Inspector of the time and location that Work will be done. Such notification shall be sufficiently in advance of construction so that there will be no delay due to waiting for survey points to be satisfactorily referenced for restoration. All survey monuments or reference points disturbed, without authorization by the Engineer, shall be accurately restored by the City at the Contractor's sole expense after all street or roadway resurfacing has been completed.

Unless otherwise noted, all construction operations shall preserve existing drainage paths, vehicular and pedestrian access. The Contractor shall also regularly attend to dust, mud, trash, noise, debris, and etceteras, caused by their construction operations to prevent a public nuisance.

All paved areas including asphalt concrete berms cut or damaged as a result of construction shall be replaced with similar materials and of equal thickness to match the existing adjacent undisturbed areas, except where specific resurfacing requirements have been called for in the Contract Documents or in the requirements of the agency issuing the permit. All temporary and permanent pavement shall conform to the requirements of the affected pavement owner. All pavement which is subject to partial removal shall be neatly saw cut in straight lines.

In order to obtain a satisfactory junction with adjacent surfaces, the Contractor shall saw cut back and trim the edge so as to provide a clean, sound, vertical joint before permanent replacement of an excavated or damaged portion of pavement. Damaged edges of pavement along excavations and elsewhere shall be trimmed back by saw cutting in straight lines. All pavement restoration and other facilities restoration shall be constructed to finish grades compatible with adjacent undisturbed pavement.

Where sidewalks have been removed for purposes of construction, the Contractor shall place suitable temporary sidewalks, properly protected, promptly after backfilling and shall maintain them in satisfactory condition until the final restoration thereof has been made.

When existing planted areas are regraded, or removed and replaced because of the Contractor's operations, the soil in these areas shall be prepared and the area replanted in kind. All landscape materials shall conform to the requirements of the owner of the affected planted area.

All utilities encountered along the line of the Work shall be maintained continuously in service during all the operations under the Contract unless other arrangements satisfactory to the Engineer are made. Utilities shall include, but not be limited to, all above or below-ground conduit, pipes, ducts, cables, and appurtenances associated with oil, gas, water, steam, irrigation, process, sewer, storm drain, wastewater, air, electrical, power, instrumentation, communication, telephone, cable, TV, and lighting systems, whether or not owned by the City.

The Contractor shall protect all existing utilities and improvements not designated for removal. Potholing for utilities and structures shown or addressed on the drawings shall be accomplished at the Contractor's expense. The Contractor shall determine the exact locations and depths of all utilities indicated on the Drawings. The Contractor shall make exploratory excavations of all utilities. The Contractor, in conformance with City Ordinance No. 150,478, shall pothole existing subsurface installations carrying unstable substances to determine their locations and elevations before commencing excavation. All such exploratory excavations shall be performed as soon as practicable after award of the Contract and in any event, a sufficient time in advance of construction to avoid possible delays to the Contractor's Work. When such exploratory excavations show the utility location as indicated on the Drawings to be in error, the Contractor shall notify the Inspector and the Engineer. The Contractor should not rely upon plan designation of location of underground utilities. The number of exploratory excavations and extent of potholing required shall be that number which is sufficient to determine the alignment and grade of the utility. These costs are a part of the Bid.

Prior to any excavation in the vicinity of any existing underground facilities, the Contractor shall notify the Inspector and the Engineer, and the respective authorities representing the owners or agencies responsible for such facilities, not less than three (3) Workdays, nor more than five (5) Workdays, of their intention to begin excavation. The Contractor shall make arrangements for and provide access such that a representative of said owners or agencies may be present during such Work. If the proposed excavation is within 10 feet of a high priority subsurface installation, as defined by Section 4216 of the California Government Code, the Contractor shall conduct an onsite meeting with the owner of the utility to determine actions or activities required to verify the location of the high priority subsurface installation before proceeding with any excavation activities.

Before commencing any excavation, the Contractor shall obtain an Underground Service Alert (USA) inquiry I.D. number. Two workdays, shall be allowed after the I.D. number is obtained and before the excavation work is started so that utility owners can be notified. If the utility owner is the City, a confirmation number indicating the City has been notified shall be obtained by USA and/or the Contractor from the appropriate City department. The I.D. number together with the date acquired shall be reported to the Inspector when calling for inspection. I.D. numbers will not be given more than ten (10) Workdays before starting excavation work.

Unless otherwise indicated on the Plans or Specifications, where the proper completion of the Work requires the temporary or permanent removal and/or relocation of an existing utility or other improvement, which is shown on the Plans, the Contractor shall, at its own expense, remove and, without unnecessary delay, temporarily replace or relocate such utility or improvement to a place and in a manner as directed by the Engineer, and the owner of the facility. In all cases of such temporary removal or relocation, restoration to former location shall be accomplished by the Contractor in a manner that will restore or replace the utility or improvement as nearly as possible to its former locations and to as good or better condition than found prior to removal. When utilities that are to be removed are encountered within the area of operations, the Contractor shall notify the Engineer not less than fifteen (15) days in advance for necessary measures to be taken to prevent interruption of service.

The Contractor shall notify the Engineer thirty (30) calendar days in advance of any proposed connection and shall notify the Engineer and the Inspector twenty-four (24) hours prior to the actual connection, to any existing utility.

Any utility or improvement which is damaged by the Contractor shall be immediately repaired at the Contractor's expense, to a condition equal to, or better than, the condition it was in prior to such damage or temporary relocation. If the Contractor fails or refuses to promptly repair the utility or improvement, the City may perform the necessary Work at the Contractor's expense. The Contractor will also not be entitled to any time extension, additional reimbursement, extended overhead, or interest on monies due. The Contractor is not relieved of provisions of this Article even in the event such damage occurs after backfilling or is not discovered until after completion of backfilling.

All repairs to a damaged improvement shall be inspected and approved by the Inspector and an authorized representative of the improvement owner before being concealed by backfill or other Work. In case of damage, which in the opinion of the Engineer or the Inspector, threatens the safety of persons or property, the Contractor shall immediately make all repairs necessary for removal of the hazard. Should the Contractor fail to promptly take all necessary action, the City has the option to remove any hazard resulting from damages caused by the Contractor at the Contractor's expense without waiving any other rights the City may have. The Contractor will also not be entitled to any time extension, additional reimbursement, extended overhead, or interest on monies due.

If the Contractor damages any existing utilities that are not shown on the Plans or the locations of which are not made known to the Contractor prior to excavation, the Contractor shall immediately notify the Inspector and take all measures necessary to prevent further damage. The Contractor shall then immediately make a written report to the Engineer and shall make repairs as directed by the Engineer.

Notwithstanding that an existing utility or substructure is not shown on the original Plans and Specifications, if the existence and location thereof was made known to the Contractor prior to excavation, the utility or substructure constitutes an existing known condition, and the Contractor is responsible for protecting the utility or substructure.

Damage to a utility known to the Contractor shall be repaired at the Contractor's expense.

00310 NON-CONFORMING WORK (1/30/03)

Except as set forth in this Article, all non-conforming Work and materials, in place or not, shall be removed immediately from the site or corrected to conform to all requirements of the Contract Documents, by the Contractor, at the sole expense of the Contractor.

If the Contractor fails to remove, replace or correct any non-conforming Work or materials within seventy-two (72) hours of discovery, the Inspector or the Engineer may cause such Work or materials to be removed and replaced. Such removal and replacement shall be at the sole expense of the Contractor with no entitlement to time extensions, additional reimbursement, extended overhead, or interest on monies due. In addition, all such cost shall be deducted from any amounts that are due or may become due to the Contractor.

Failure of the Inspector or the Engineer to notify the Contractor of any non-conforming Work shall not constitute acceptance of any non-conforming Work. The Contractor's obligation to remove, replace or correct any non-conforming Work, whenever discovered, shall continue to the end of the guaranty-warranty period provided for in "Guaranty-Warranty" of the General Requirements. The City reserves and retains all rights and remedies at law against the Contractor and their Surety for correction of any and all latent defects discovered after the guaranty-warranty period.

Any delays or impacts arising on the Work because of construction, fabrication or delivery of non-conforming work or materials shall be at the Contractor's sole expense, with no time extension, additional reimbursement for extended overhead, or interest on monies due allowed.

Examination of covered Work may be ordered by the Engineer or the Inspector for any reason. The Work shall be uncovered by the Contractor and if such Work is found to be in accordance with the Contract Documents, the City will issue a Change Order authorizing payment for the cost of examination and replacement. If such Work is found to be not in conformance with the Contract Documents, the Contractor shall correct the non-conforming Work and the cost of examination and correction of the non-conforming Work shall be borne solely by the Contractor.

Failure of the Contractor to comply with the requirements of this Article shall constitute default of the Contract by the Contractor and the City may terminate the Contract as provided for in Termination of Contract by City (Contractor Default).

00311 SUBCONTRACTORS AND SUB-SUBCONTRACTORS (10/28/14)

The Contractor shall perform on the site and with its own organization not less than fifty percent (50%) of the total Contract Price, unless a different percentage is designated in the Bid Proposal. Any items designated "specialty items" in the Bid Proposal may be performed by subcontract and the amount of all such "specialty items" may be deducted from the Contract Price before computing the amount of Work required to be performed by the Contractor with its own organization. The dollar value included in the percentage performed by the Contractor shall include the value of labor, materials, and equipment to be incorporated or used in the Work and directly purchased by the Contractor and shall not include the value of Work, including labor, materials and equipment, incorporated or used in the Work, performed or provided by Subcontractors.

To be eligible for award of this Project, the Board requires Bidders to subcontract a minimum of its total Bid to qualified Subcontractors, as discussed in the "Mandatory Subcontracting Minimum (MSM) Requirements" of the Bid Proposal. Failure to list Subcontractors and the subcontracted dollar amounts on the applicable pages of the Bid Proposal to satisfy the MSM is cause for the Bid to be declared nonresponsive and rejected by the Board.

Bidders must list all Subcontractors in the Bid, regardless of the dollar amount of the work to be performed, if the Bidder wishes to have the Subcontract amount credited toward meeting both the MSM

and MBE/WBE levels of participation of the Project. Subcontractors added to the project following acceptance of the Bid and award of the Project will not be credited toward meeting the required MSM and/or MBE/WBE levels of participation for this Project.

MSM credit will not be given to a joint venture partner listed as a Subcontractor by a joint venture.

Listed vendors and/or Suppliers will be limited to 60% of their listed dollar value toward achieving both the MSM and the anticipated MBE/WBE levels of participation for this Project unless the vendor and/or Supplier manufactures or substantially alters the materials/supplies.

The designated percentage of the total Contract Price the Contractor is to perform may not be reduced below that level by the addition of Subcontractor's added after Award of the Project.

The Inspector, acting on behalf of the Board, will be responsible for the approval of all Subcontractors, whether Bid-listed or not, and all Sub-subcontractors, at any level, employed on the Project.

Each Subcontractor who will perform Work or render services in an amount more than one-half of 1 percent of the Contractor's total Bid or $10,000.00, whichever is greater, must be listed in the original Bid.

Subletting or Subcontracting of any portion of the Work in excess of one-half of 1 percent of the Contractor's original total Bid or $10,000.00, whichever is greater, for which no Subcontractor was designated in the original Bid shall only be permitted in cases of public emergency or necessity, and then only after a finding reduced to writing as a public record of the Inspector setting forth the facts constituting the emergency or necessity.

If the Contractor fails to specify a Subcontractor, or if the Contractor specifies more than one Subcontractor for the same portion of Work to be performed under the Contract in excess of one-half of 1 percent of the Contractor's total original Bid or $10,000.00, whichever is greater, the Contractor agrees that it is fully qualified to perform that portion of Work itself, and that it shall perform that portion itself.

The Contractor shall set forth in its Bid the following: The name, location of the place of business, telephone number, California State Contractor's License Number and dollar amount of each Subcontractor who will perform Work, labor, service, supply specifically fabricated materials or equipment in an amount in excess of one-half of 1 percent of the Contractor's total Bid, or $10,000.00, whichever is greater.

The Contractor shall list only one Subcontractor for each portion of Work as defined by the Contractor in its Bid.

Acceptance by the Board of its Bid is dependent upon each Bid listed Subcontractor, and all subsequently approved additional Subcontractors, performing the dollar value of Work listed or approved. Any reduction, increase, or other change to any Subcontract amount without prior approval is considered an Unauthorized Subcontractor Substitution and is subject to a penalty of ten (10) percent of the Subcontract amount, whether Bid-listed or not. A Subcontract dollar value increased or reduced as the result of a Change Order issued by the Engineer to add or delete from the original scope of Work shall not be subject to a penalty for an Unauthorized Subcontract Substitution.

Acceptance by the Board of its Bid shall not entitle Subcontractors to recognition for any direct or contractual relationship with the City, nor shall it constitute approval of the use of any materials other than those specified.

The Contractor shall be responsible for all acts of all Subcontractors at all tiers. The Contractor shall coordinate all work performed by subcontractors in the interest of the City.

All Subcontractors, at all tiers, who will be working on the Project shall be approved in writing by the Inspector prior to beginning Work, regardless of the dollar amount of Work to be performed, and whether or not they were listed in the original Bid.

Requests for approval of all Subcontractors, or request for substitution of a Subcontractor, shall be made in writing to the Inspector, and said request shall contain the following information for each Subcontractor:

1) Project Name

2) Project Work Order Number

3) Subcontractor's Name

4) Subcontractor's Address

5) Subcontractor's Phone Number

6) Subcontractor's Status (WBE, MBE, OBE)

7) Subcontractor's State of California Contractor License Number

8) Subcontractor's City Business Tax Registration Certificate Number (BTRC)

9) Dollar amount of Subcontract work to be performed

10) Description of Subcontract work to be performed

Failure to provide any of the information listed will result in denial of approval until such time as the information is provided.

Failure to obtain approval of the Inspector prior to each Subcontractor, at any level, performing Work on the Project may result in suspension of Work by that Subcontractor, removal of Work performed by unapproved Subcontractors, assessment of penalties, and possible sanctions against the Contractor. Failure to obtain approval of any Subcontractor or Sub-subcontractor at any level is subject to a penalty of ten (10) percent of the total amount of work performed by said Subcontractor.

Additional Subcontractors may be added after the time of original Bid. The value of Work to be performed by additional Subcontractors may not be greater than one-half of 1 percent of the Contractor's original total Bid or ten thousand dollars ($10,000.00), whichever is greater, unless the Subcontractor will be performing Work added by Change Order causing changes or deviations from the original Contract.

The Contractor shall provide the dollar amount of Work to be performed in all requests for additional Subcontractors and/or Sub-subcontractors. Failure to specify a dollar amount of Work to be performed will result in denial of additional Subcontractors until such time as the amount is provided.

Failure of the Contractor to request and obtain approval for a reduction in either a Bid-listed Subcontract amount or the Subcontract amount of a Subcontract added after the original Bid shall result in a penalty of ten percent of the Subcontract amount.

A Contractor whose Bid is accepted may not:

1) Substitute any person as Subcontractor in place of a Subcontractor listed in the original Bid, except that the Inspector, acting on behalf of the Board, may consent to the substitution of another Subcontractor for one of the following situations:

A) When the Subcontractor listed in the original Bid or proposal after having had a reasonable opportunity to do so fails or refuses to execute a written contract, when that written contract, based upon the general terms, conditions, plans and specifications for the project involved or the terms of that Subcontractor's written bid, is presented to the subcontractor by the Contractor.

B) When the listed Subcontractor becomes bankrupt or insolvent.

C) When the listed Subcontractor fails or refuses to perform its subcontract.

D) When the listed Subcontractor fails or refuses to meet the bond requirements of the Contractor as set forth herein.

E) When the Contractor demonstrates to the Inspector's satisfaction that the name of the Subcontractor was listed because of an inadvertent clerical error.

F) When the listed Subcontractor is not licensed pursuant to the State of California Contractor's License Law.

G) When the listed Subcontractor refuses to obtain a City of Los Angeles Business Tax Receipt Certificate (BTRC).

H) When the Inspector concurs with the Contractor that the Work being performed by the listed Subcontractor is unsatisfactory and not in substantial accordance with the Contract Documents, or the listed Subcontractor is delaying or disrupting the progress of the work.

I) When the listed Subcontractor fails to submit an Affirmative Action Plan acceptable to the Inspector.

J) When the Board determines that a listed Subcontractor is not a responsible contractor.

2) Permit a Subcontract to be voluntarily assigned or transferred or allow it to be performed by anyone other than the original Subcontractor listed in the original Bid, without the consent of the Inspector.

3) Other than in the performance of Change Orders causing changes or deviations from the original Contract, sublet or Subcontract any portion of the Work in excess of one half of 1 percent of the Contractor's total Bid as to which its original Bid did not designate a Subcontractor.

4) Reduce the dollar amount of a Bid-listed Subcontract without the written approval of the Inspector.

A request for substitution of any Subcontractor, at any level, whether Bid-listed or not, must be made in writing to the Inspector and must include letter(s) of explanation as to the reason for the requested substitution.

It is considered a substitution if anyone other than the Bid-listed and/or approved Subcontractor(s), including the Contractor, performs any portion of the Work designated to be performed by said Subcontractor.

Failure to obtain approval for a Subcontractor substitution may result in rejection of the affected Work, a penalty of ten (10) percent of the total amount of the Subcontract, and possible sanctions by the City.

All substitutions of Subcontractors, whether MBE/WBE or not, shall be approved in writing by the Board prior to any Work being performed by the substituting Subcontractor.

The Contractor shall conduct a Good Faith Effort prior to approval of any requested Subcontractor substitution, regardless of the status (WBE/MBE/OBE/DBE) of the contractor being substituted for. For MBE/WBE/OBE Subcontractor substitution requests, the Contractor shall comply with the Good Faith Effort requirements of Part III (F) (2) of the Bid Proposal. The Good Faith Effort for any requested Subcontractor substitution must be reviewed and approved by the Special Research and Investigation Section of the General Services Division of the Bureau of Contract Administration, whether the Subcontractor was Bid listed or approved after the Award of the Project.

There shall be no decrease in dollar value of Work to be performed by Subcontractors approved as a substitute for a Bid-listed Subcontractor without a change in scope of the Work to be performed by the originally Bid-listed Subcontractor. Written evidence of a change of scope must be provided by the Engineer prior to approval of a change in dollar value of a Bid-listed Subcontractor.

Prior to approval of the Contractor's request for substitution, the Inspector shall give notice in writing to the Subcontractor affected by the Contractor's request to substitute and of the reasons for the request. The notice shall be served by certified or registered mail to the last known address of the Subcontractor. The listed Subcontractor who has been notified shall have five (5) Workdays within which to submit written objections to the substitution. Failure to file these written objections within five (5) Workdays of notification shall constitute the listed Subcontractor's consent to the substitution. Notification by the Inspector may be made by phone in lieu of written notification via certified or registered mail if agreed to by the listed Subcontractor and followed by written request. Upon notification by phone, the listed Subcontractor may file written objections within five (5) days of notification.

If written objections are filed, the Inspector shall give notice of at least five (5) Workdays to the listed Subcontractor of a hearing on the Contractor's request for substitution.

The Contractor, as a condition to assert a claim of Inadvertent Clerical Error in the listing of a Subcontractor, shall within two Workdays after the time of the original Bid opening by the Board give written notice to the Inspector and copies of such notice to both the Subcontractor he claims to have listed in error and the intended Subcontractor who had bid to the Contractor prior to Bid opening.

Written notice of an Inadvertent Clerical Error shall be forwarded within two (2) days after the time of the original Bid opening by every Contractor claiming such an error. Failure to forward such notice within the time prescribed shall make any such subsequent claim of Inadvertent Clerical Error invalid.

Any listed Subcontractor who has been notified by the Contractor of an Inadvertent Clerical Error shall be allowed six (6) Workdays from the time of the Bid opening to submit to the Inspector and to the Contractor written objection to the Contractor's claim of Inadvertent Clerical Error. Failure of such listed Subcontractor to file such written notice within the six (6) Workdays shall constitute agreement that an advertent clerical error was made.

The Inspector shall, in the absence of compelling reasons to the contrary, consent to the requested substitution based on an Inadvertent Clerical Error if:

1) The Contractor, the Subcontractor listed in error, and the intended Subcontractor each submit an affidavit to the Inspector along any additional information as the parties may wish to submit that an Inadvertent Clerical Error was in fact made, provided that the affidavits from each of the three parties are filed within eight (8) Workdays from the time of the original Bid opening, or

2) If such affidavits are filed by both the Contractor and the intended Subcontractor within eight days of the original Bid opening but the Subcontractor whom the Contractor claims to have listed in error does not submit within six (6) Workdays, to the Inspector and to the Contractor, written objection to the Contractor's claim of Inadvertent Clerical Error as provided in this article.

If such affidavits are filed by both the Contractor and the intended Subcontractor but the listed Subcontractor has, within six (6) Workdays from the time of the original Bid opening, submitted to the Inspector and to the Contractor written objection to the Contractor's claim of Inadvertent Clerical Error, the Inspector shall investigate the claims of all parties and schedule a public hearing before the Board to determine the validity of such claims. Any determination shall be based on the facts contained in the declarations submitted under penalty of perjury by all three parties and supported by testimony given to the Board. The Board may, on its motion or that of any other party, admit testimony of other Contractors, any Bid registries or depositories, or any other party in possession of facts, which may have a bearing on the decision of the Board. The findings of the Board shall be final.

The Contractor shall pay its Subcontractors, within seven (7) days of receipt of each progress payment, the respective amounts allowed the Contractor on account of the work performed by its Subcontractors, to the extent of each Subcontractor's interest therein. Payments to Subcontractors shall be made based on the payment estimate approved for payment by the Inspector.

The Contractor shall forward to the Inspector a monthly report indicating the date and amount of each payment made to its Subcontractors from the most recent progress payment. If the Contractor has a written agreement with any Subcontractor allowing for payment later than 7 days after receipt of each progress payment, the Contractor shall include the written agreement(s) in its monthly report.

00312 RESPONSIBILITY OF CONTRACTOR TO ACT IN EMERGENCY (11/21/01)

When an emergency arises creating an imminent hazard to persons or threatening the loss or damage to property, the Contractor shall take prudent action without instruction from the City. The Contractor shall immediately notify the Engineer and the Inspector of any emergency action taken. During such emergencies, if the Contractor fails to act, the Engineer or Inspector may instruct the Contractor to take action. Should the Contractor still fail to act, the Engineer or Inspector may respond to the emergency with other forces or contractors at the Contractor's sole expense. Claims for additional time, compensation or interest will be rejected if the Contractor's actions or inaction created the emergency. Similarly, any Claims will be offset by the amount that the Contractor's actions or inaction aggravated the emergency.

00313 ASSIGNMENT (2/09/95)

The Contractor shall not assign, transfer, convey or otherwise dispose of this Contract or any of the proceeds thereunder unless written consent of the City has been obtained. No right under this Contract or claim for any proceeds due or to become due hereunder shall be asserted against the City, or persons acting for the City, by reason of any so-called assignment, transfer or conveyance of this Contract or any part thereof unless such assignment, transfer or conveyance has been authorized by the written consent of the City. The instrument of assignment, transfer or conveyance shall contain a clause subordinating the claim of the assignee, transfer or conveyor to all prior liens for services rendered or materials supplied for the execution of the Work.

00314 NOTIFICATION OF HAZARDOUS SUBSTANCES (10/17/01)

The existing facilities or Jobsite may contain asbestos, PCBs, corrosives, carcinogens, or other hazardous materials. Should the Contractor or any of its Subcontractors, while performing Work on or in the vicinity of existing facilities, unexpectedly encounter any material identified in the California Code of Regulations, Title 8, as a hazardous material not shown on the Plans or addressed in the specifications, or have reason to believe that any other material encountered may be a hazard to human health and safety and/or the environment, the Contractor shall stop the Work, cordon off the affected area to secure entry, and shall immediately notify the Inspector and the Engineer. Removal and disposal of the hazardous material not shown on the Plans or addressed in the specifications, if the Engineer deems it necessary, will be done by and at the expense of the City. The City will provide the Contractor, upon

request, with copies of Material Safety Data Sheets (MSDS) covering hazardous materials identified by the Contractor that are encountered in existing facilities during the course of the Work and that are not removed by the City.

In the event that the Contractor is delayed in the completion of the Contract solely because of such hazardous materials or conditions not previously identified in the Contract Documents, the Contractor shall be entitled to an extension of time in accordance with "Unavoidable Delay" of these General Conditions.

For new construction Work and for all Contractor furnished supplies and equipment that may contain hazardous materials, the Contractor shall develop and implement a written Hazard Communication Program for its employees in accordance with the California Code of Regulations. The Contractor's basic written Hazard Communication Program shall be submitted to the Engineer and the Inspector prior to the start of Work at the site and shall be revised and kept current as required by the continuing progress of the Work. The Contractor's Hazard Communication Program shall also include the MSDS for all hazardous materials the Contractor will be using at the facility. All provisions concerning MSDS for hazardous materials shall be met before the hazardous material is delivered to the site.

The Engineer shall be provided with three (3) copies and the Inspector with four (4) copies of the Contractor's written Hazard Communication Program, Contractor provided MSDS, and all revisions and modifications thereto.

The Contractor and Subcontractors shall comply with all State and Federal statutes and regulations on training, handling, storage, public notification, and disposal of hazardous materials and hazardous wastes. In the event that the Contractor or its Subcontractors spills or releases hazardous materials, the Contractor shall immediately notify the Inspector and the Engineer, and any required agencies of the spill or release and the Contractor shall stop the Work, and cordon off the affected area to secure entry. Removal and disposal of the hazardous material, if the Engineer deems it necessary, will be done by the City at the Contractor's expense. Further, the Contractor shall notify the Engineer and the Inspector when hazardous materials are brought on-site and when hazardous materials and hazardous wastes are removed from the site. Hazardous Materials brought on site shall be accompanied by four (4) copies of MSDS, which shall be provided to the Inspector before such materials are unloaded.

00315 INDEPENDENT CONTRACTOR (10/21/99)

The Contractor represents that it is fully experienced and properly qualified to perform the class of Work required for the Contract and that it is properly licensed, equipped, organized and financed to perform the Work. The Contractor shall be an independent contractor. The Contractor is not an agent of the City in the performance of the Contract and shall maintain complete control over its employees and its Subcontractors and Suppliers of any tier. Nothing contained in the Contract, or any Subcontract awarded by the Contractor shall create any relationship between any Subcontractor and the City. The Contractor shall perform the Work in accordance with its own methods, in compliance with the terms of the Contract.

00316 INDEMNIFICATION (10/17/01)

Except for the active negligence or willful misconduct of the City, the Contractor undertakes and agrees to defend, indemnify and hold harmless, through legal counsel acceptable to the City, the City, and any and all of the City's Boards, Officers, Agents, Employees, Assigns, and Successors in Interest from and against all suits and causes of action, claims, losses, demands and expenses, including, but not limited to, attorney's fees and cost of litigation, damage or liability of any nature whatsoever, arising out of or related to the performance or nonperformance by Contractor or its Subcontractors, Sub-Subcontractors, or Suppliers, of any tier, of any portion of the construction of the Project, including but not limited to Contractor's negligent acts, errors, omissions, breach of contract, breach of warranty (express or implied), or willful misconduct.

It is agreed that such defense and indemnity shall extend to the City's Architect/Engineer or other Design Consultant providing services under written agreement with the City covering any portion of the Project. Provided, however, that the Design Consultant shall be solely responsible for the enforcement of any request made by said Consultant for indemnification or defense by the Contractor. It is further provided that the City shall have no liability whatsoever for any failure of the Contractor to comply with any request from the consultant for indemnity or defense.

It is further agreed that the defense and indemnity obligations of the Contractor under this Article shall not extend to the liability of the Design Consultant or its agents, employees or subconsultants, arising as a result of such indemnitee's own active negligence, errors or omissions or from (1) the preparation or approval of maps, Plans, opinions, reports, surveys, change orders, designs or Specifications, or (2) the giving of or failure to give directions or instructions by the indemnitee provided that such giving or failure to give is the primary cause of the damage or injury.

00317 INSURANCE (1/05/10)

These provisions apply unless otherwise noted in the General Requirements.

A) GENERAL

During the term of this Contract and without limiting the Contractor's indemnification of the City, the Contractor shall provide and maintain at its own expense, insurance having the limits customarily carried and arranged by the Contractor but not less than the amounts and types listed on the Insurance Requirements Form in these Contract Documents, covering its operations hereunder subject to the following conditions as they may variously apply:

1) ADDITIONAL INSURED/ADDITIONAL INTEREST/LOSS PAYEE

The City, its Boards, Officers, Agents, and Employees shall be included as:

a) Additional Insureds in all required General Liability and Automobile Liability insurance.

b) Named Insureds in all required Owners and Contractors Protective Liability and Builder's Risk insurance policies.

c) Loss Payee As Its Interest May Appear in all required property, fidelity or Surety coverages.

2) INSURANCE APPROVAL

All insurance required hereunder shall conform to the City requirements established by Charter, ordinance or policy. Evidence of insurance shall be approved by the Office of the City Administrative Officer, Risk Management prior to commencement of any Work or tenancy under this Contract in accordance with the Los Angeles Administrative Code.

3) ALTERNATIVE PROGRAMS/SELF-INSURANCE

Alternative Risk Financing mechanisms such as Risk Retention Groups, Risk Purchasing Groups, offshore carriers, captive insurance programs and self-insurance programs are subject to separate approval after the City has reviewed their financial statements.

4) ADMITTED CARRIER/LICENSED CALIFORNIA BROKER

All Insurance must be provided by an insurer admitted to do business in California or written through a California-licensed surplus lines broker or through an insurer otherwise acceptable to the City.

Non-admitted coverage must also contain a Service of Suit provision whereby the underwriters will submit as necessary to any court of competent jurisdiction in California and agree that all matters arising thereunder will be determined in accordance with the law and practice of such court. It must further give the name and address of the underwriter's agent for service of process located within California or must nominate the California Insurance Commissioner as such agent.

5) CONTRIBUTION NOT REQUIRED

The Contractor's insurance shall be primary and will not require contribution or shall be endorsed to affect these provisions.

6) CANCELLATION/REDUCTION IN COVERAGE NOTICE

With respect to the interest of the City, if an insurance company elects to cancel insurance before the stated expiration date, or declines to renew in the case of a continuous policy, or materially reduces the coverage period by changing the retroactive date (if any), or the extended discovery period (if any), or reduces the stated limits other than by impairment of an aggregate limit, or materially reduces the scope of coverage which affects the City's interest, the company will provide the City at least thirty (30) calendar days (ten (10) calendar days for non-payment of premium) prior written notice of such election. Notice will be addressed as follows: CAO-RISK MANAGEMENT, MAIL STOP 132, CITY HALL EAST 1240, 200 NORTH MAIN STREET, LOS ANGELES, CA 90012-4190.

7) ACCEPTABLE EVIDENCE

Electronic submission via Track4LA™, the City's online insurance compliance system (http://track4la.lacity.org), is the preferred method for submitting evidence of insurance. Track4LA™ can be used by insurance brokers and agents to submit Contractor insurance certificates directly to the City using the ACORD 25 Certificate of Liability Insurance in electronic format. Insurance Industry Certificates of Insurance other than the ACORD 25 may also be accepted. However, **all** Certificates must provide a thirty (30 days' notice provision (ten (10) days for non-payment of premium) AND an Additional Insured Endorsement naming the City an additional insured completed by Contractor's insurance company or its designee. If the policy includes an automatic or blanket additional insured endorsement, the Insurance Certificate must state that the City is an automatic or blanket additional insured. An endorsement naming the City as an insured is required on all Builder's Risk policies. An endorsement naming the City as Loss Payee as its Interest may appear is required on all property, fidelity or Surety coverages.

Alternatively, the Contractor may submit a copy of the full insurance policy containing language which complies with subparagraphs 1) through 6) above.

Additional Insured Endorsements DO NOT apply to the following:

- Indication of compliance with statute, such as Workers' Compensation Law.
- Professional Liability insurance.

8) SEPARATION OF INSUREDS

Except with respect to the insurance company's limits of liability, each liability insurance policy shall apply separately to each insured against whom a claim or suit is brought. The inclusion of any person or organization as an insured shall not affect any right which such person or organization would have as a claimant if not so included.

9) RENEWAL

Once the insurance has been approved by City, evidence of renewal of an expiring policy may be submitted on a manually signed renewal endorsement or certificate form. If the policy or carrier has changed, however, new evidence as specified in paragraphs 1) through 8) above, must be submitted.

B) AGGREGATE LIMITS/REDUCTION IN COVERAGE

If any of the required insurance coverage contains annual aggregate limits, the Contractor must give the City written notice of any pending claim or lawsuit which will materially diminish the aggregate within thirty (30) days of knowledge of same. Further, the Contractor must take appropriate steps to restore the impaired aggregate limits or provide replacement insurance protection within thirty (30) days of knowledge of same. The City may, at its option, specify a minimum acceptable aggregate for each line of coverage required.

The Contractor shall not make any substantial reductions in scope of coverage (e.g., elimination of contractual liability or reduction of discovery period) which may affect the City's protection without the City's prior written consent.

C) MODIFICATION OF COVERAGE

The City reserves the right at any time during the term of this Contract to change the amounts and types of insurance required hereunder by giving the Contractor ninety (90) calendar days advance written notice of such change. If such change should result in substantial additional cost to the Contractor, the City agrees to negotiate additional compensation.

D) FAILURE TO PROCURE INSURANCE

The Contractor's failure to procure or maintain required insurance or a self-insurance program during the entire term of this Contract shall constitute a material breach of this Contract under which the City may immediately suspend or terminate this Contract or, at its discretion, procure or renew such insurance to protect the City's interests and pay any and all premiums in connection therewith, and recover all monies so paid from the Contractor.

E) UNDERLYING INSURANCE

The Contractor shall be responsible for requiring indemnification and insurance as it deems appropriate from its consultants, agents and Subcontractors, if any, to protect the Contractor's and the City's interests, and for ensuring that such persons comply with any applicable insurance statutes. The Contractor should seek professional advice in this regard.

F) WORKERS' COMPENSATION

By signing this Contract, the Contractor hereby certifies that it is aware of the provisions of Section 3700 et seq., of the Labor Code which require every employer to be insured against liability for Workers' Compensation or to undertake self-insurance in accordance with the

provisions of that Code, and that it will comply with such provisions at all such times as they may apply during the performance of the Work pursuant to this Contract.

A waiver of subrogation in favor of the City will be required when Work is performed on City premises under hazardous conditions. The Contractor's Workers' Compensation and Employer's Liability insurance shall be endorsed accordingly.

G) ALL RISK BUILDER'S RISK/INSTALLATION FLOATER

During the course of construction, the Contractor shall secure and maintain an All Risk Builder's Risk Insurance policy covering loss, damage or destruction of property, including materials in transit and stored on and off site, in an amount equal to the value of the construction and materials on hand.

An Installation Risk or "Floater" Policy, written to cover only specific types of equipment during construction, may be provided to cover damage to Work or high valued equipment or materials.

Coverage shall remain in force until the Work is completed and accepted by the City. Acceptable evidence of coverage shall be in the form of an endorsement to the policy which names the City as a Named Insured and as Loss Payee As Its Interest May Appear.

H) TYPICAL COVERAGES REQUIRED

The coverages required in A above shall be at least as broad as:

1) General Liability: Insurance Services Office Commercial General Liability coverage (Occurrence Form CG 00 01) with an edition date prior to 2004. Coverage shall include protection for the City as additional insured regarding the completed operations hazard.

2) Automobile Liability: Insurance Services Office Form Number CA 00 01 covering Automobile Liability, code 1 (any auto).

3) Professional Liability: If applicable, errors and omissions liability appropriate to the consultant's profession, with a discovery period of not less than twelve (12) months after completion of Work or termination of Contract.

I) TYPICAL LIMITS OF LIABILITY

Unless otherwise specified in Form Gen. 146/IR, the Contractor shall maintain limits no less than:

1) General Liability: $1,000,000 per occurrence, $2,000,000 aggregate for bodily injury and property damage. A separate aggregate shall apply to completed operations.

2) Automobile Liability: $1,000,000 per accident for bodily injury and property damage.

3) Employer's Liability: $1,000,000 per accident for bodily injury or disease.

1) Professional Liability: $1,000,000 per claim.

K) CONTRACT BONDS

Before the execution of the Contract by the Board, the Bidder shall file with the Board Surety bonds satisfactory to the Board in the amounts and for purposes noted below. Bonds shall be duly executed by a responsible corporate Surety, authorized to issue such bonds in the State of California and secured through an authorized agent with an office in California. Bonds shall be

issued by a Surety who is listed in the latest revision of U.S. Department of Treasury Circular 570, is authorized to issue bonds in California, and whose bonding limitation shown in said circular is sufficient to provide Bonds in the amount required by the Contract. The Bidder shall pay all Bond premiums, costs, and incidentals. On Contracts estimated by the Engineer to be less than $2 million, Bonds may be obtained from an insurance company with a Certificate of Authority from the California Insurance Commissioner authorizing the company to write Surety insurance within the State of California.

Each Bond shall be signed by both the Bidder and the Surety, and the signature of the authorized agent of the Surety shall be notarized.

The Bidder shall provide two good and sufficient surety bonds. The "Payment Bond" (Material and Labor Bond) shall be for not less than one hundred percent (100%) of the Contract Price, to satisfy claims of material suppliers and of mechanics and laborers employed by it on the Work. The bond shall be maintained by the Contractor in full force and effect until the Work is accepted by the Board, and until all claims for materials and labor are paid and shall otherwise comply with the California Civil Code.

The "Performance Bond" shall be for one hundred percent (100%) of the Contract Price to guaranty faithful performance of all Work, within the time period prescribed, in a manner satisfactory to the Board, and that all materials and Workmanship will be free from original or developed defects and comply with requirements and guaranty specified in “Guaranty-Warranty” of the General Requirements.

Should any Surety at any time be unsatisfactory to the Board, notice will be given to the Contractor to that effect. No further payments shall be deemed due or will be made under the Contract until a new Surety shall qualify and be accepted by the Board.

Changes in the Work, or extensions of time, made pursuant to the Contract, shall in no way release the Contractor or Surety from its obligations. Notice of such changes or extensions shall be waived by the Surety. In addition to the bonds detailed above, the Contractor shall provide a guarantee bond as detailed in “Guaranty-Warranty” of the General Requirements.

Assistance in obtaining the City-required bid, payment and performance surety bonds is available through the City of Los Angeles Bond Assistance Program at (213) 258-3000 or http://cao.lacity.org/risk/BondAssistanceProgram.pdf.

00318 SERVICE OF NOTICE (2/09/94)

The delivering of any notice, instruction, claim or protest, or other written communication, personally to the Contractor or the Contractor’s Representative or to the Engineer, the Inspector, or to the City Clerk of the City shall constitute service therefore upon the Contractor, the Engineer, the Inspector, or the City, respectively.

The depositing of a post-paid (Registered Mail) wrapper directed to the official address of the Contractor, the Engineer, the Inspector, or the City in any post office, of any notice, instruction, claim or protest, or written communication, shall be deemed sufficient service thereof upon the Contractor, the Engineer, the Inspector, or the City, respectively, and the date of said service shall be the day following the date of postmark.

The official address of the Contractor shall be the address given in the accepted Bid or such other address as the Contractor may subsequently designate in writing either to the Engineer or to the City. The official address of the Engineer, the Inspector, and the City will be supplied to the Contractor after the award.

00319 AGENT TO ACCEPT SERVICE (10/21/99)

The Contractor shall maintain within Los Angeles County a duly authorized agent as identified in the Article entitled Service of Notice to accept service of legal process on its behalf, and shall keep the City advised of such agent's name and address during the duration of the Contract and for three (3) years after the Final Payment, or as long as the Contractor has warranty obligations under the Article entitled "Guaranty-Warranty" of General Requirements, whichever period terminates later. If no such duly authorized agent is on file with the City, the Contractor agrees that the Secretary of State of the State of California shall be the Contractor's agent for service of legal process.

00320 – 00399 NOT USED

00400 TEMPORARY SUSPENSION OR DELAY OF WORK (9/18/07)

If the Work of the Contract is suspended or delayed, the Contractor shall so notify the Engineer within twenty-four (24) hours after the start thereof. If the Contractor is entitled to reimbursement for such suspension or delay, as specified hereinafter, the Contractor shall submit a completely detailed statement of the costs thereof, to the Engineer, within twenty (20) calendar days after the termination thereof. Failure to submit such statement of costs or notification within the time specified shall be deemed a waiver of any claims for delay or damages or both by the Contractor.

If the Work of the Contract is suspended or delayed through no fault of the City, except as provided for in Unavoidable Delay of these General Conditions, all expenses and losses shall be borne by the Contractor with no time extension, additional reimbursement for extended overhead, or interest on monies due, allowed to the Contractor.

If the Work of the Contract is suspended or delayed by an act of the City, or by failure of the City to furnish required information, and the Contractor thereby incurs expenses or sustains losses which could not have been avoided by the judicious handling of forces and equipment, and if by a diligent prosecution of the Work the Contractor could not have completed the Work before such suspension, the Contractor will be paid such amount as the Engineer may find to be a fair and reasonable compensation for such part of the Contractor's actual loss. In no case shall any compensation be made to cover any loss other than actual cash paid for wages, rental of equipment, and materials used in protection of the Work, all of which must be supported by satisfactory written evidence. Such wages shall not include the wages or salary of any individual not necessary for protection of the Work. The Contractor shall not be entitled to any mark-up for overhead or profit on damages or for extended duration or for interest on monies due for work satisfactorily completed prior to the suspension or delay.

The Contractor shall maintain complete and accurate daily records of all costs due to delay, clearly distinguishing them from the costs of other portions of the Work and shall submit a detailed written report of such costs to the Engineer and the Inspector within twenty (20) calendar days of incurring the delay. Failure to comply shall result in a waiver by the Contractor to any claims for additional payment and schedule change. In addition, the Contractor shall submit evidence of any cause of delay specified herein if it has not already done so.

As soon as practicable, following receipt of such report and evidence, if required, the Engineer will determine the nature and extent of such costs and will, if the Engineer finds that payment is due, issue a Change Order therefor, subject to the provisions in "Change Orders" of the General Requirements. If the Engineer determines that payment is not due, the Contractor will be so advised in writing. Should the Contractor disagree with such finding, Contractor may submit a notice of protest to the Engineer as provided in Claims and Protests. The Contractor shall provide the Engineer with access to its daily cost records or certified copies thereof as requested. All such records shall be retained by the Contractor and open to inspection and audit by the City and the Engineer. Except for the additional compensation provided hereinbefore, the Contractor shall have no claim for damage or compensation for any delay or hindrance whether or not contemplated by the Contract.

00401 UNAVOIDABLE DELAY (10/17/01)

Should the Contractor be obstructed or delayed in the completion of the Work from causes beyond its control and without its fault or negligence, and solely due to acts of God, acts of government in its sovereign capacity, riots, insurrections, wars, fires, floods, earthquakes, tidal waves, epidemics, quarantine restrictions, industry-wide strikes, freight embargoes, or unusually severe weather, it shall be entitled to a noncompensable extension of time.

The Contractor shall only be entitled to a noncompensable extension of time for Unavoidable delay in the Work which negatively impacts the critical path of the approved project schedule and causes the Work of the project to extend beyond the approved Contract Completion date.

The Contractor shall be entitled to a noncompensable time extension only if it notifies the Engineer and the Inspector immediately at the time the Contractor is prevented from proceeding with the Work and follows with written notification of the causes of the delay within five (5) calendar days from the beginning of any delay. Also, the Contractor shall notify the Engineer and the Inspector immediately at the end of the delay and follow up with written notification of the cessation of delay within five (5) calendar days from the end of the delay.

Any claim for a time extension shall be made in writing within twenty (20) calendar days after the conclusion of the delay. The Engineer and the Inspector shall ascertain the facts and the extent of the delay and extend the time for completing the Work if, in their judgement, the findings of fact justify such an extension. The Engineer's decision shall be final and conclusive, subject only to appeal as provided by Claims and Protests.

00402 ARCHAEOLOGICAL AND PALEONTOLOGICAL DISCOVERIES (9/18/07)

If items of archaeological or paleontological interest are discovered, the Contractor shall immediately cease excavation in the area of discovery and shall not continue until ordered by the Engineer. When resumed, excavation operations within the area of discovery shall be as directed by the Engineer.

Such discoveries include antiquated dwelling sites, stone implements or other artifacts, animal bones, human bones, fossils and the like. The Contractor shall be entitled to an extension of time and compensation in accordance with the provisions of Temporary Suspension or Delay of Work.

00403 COORDINATION WITH OTHER CONTRACTS (1/30/03)

The Board may allow other work at the site by the City's own forces, utility owners or other direct contracts. If such other work to be performed was not noted in the Contract Documents, written notice thereof will be given to the Contractor prior to starting any such other work; and, if the Contractor believes that such performance will involve additional expense to the Contractor or requires additional time and the parties are unable to agree as the extent thereof, the Contractor may make a claim therefor as provided under Claims and Protests.

Paving of roadway areas shall be withheld until planned utility changes or installations have been made under City permits and until verifications of completion of all such changes or installations have been received by the Inspector. The Contractor is responsible for assuring that verifications are submitted by the utilities. Underground final inspection and acceptance of sewer and storm drain installations shall precede paving operations.

The Contractor shall afford each utility owner and other contractor who is a party to such a direct contract (or the City, if the City is performing the additional work with City employees) proper and safe access to the site and a reasonable opportunity for the introduction and storage of materials and equipment and the execution of such work and shall properly connect and coordinate the Work with theirs. The Contractor

shall do all the cutting, fitting and patching of the Work that may be required to make its several parts come together properly and integrate with such other work. The Contractor shall not endanger any work of others by cutting, excavating, or otherwise altering their work and will only cut or alter their work with the written consent of the Engineer and the others whose work will be affected. The duties and responsibilities of the Contractor under this Article are for the benefit of such utility owners and other contractors to the extent that there are comparable provisions for the benefit of the Contractor in said direct contracts between the City and such utility owners and other contractors.

If any part of the Contractor's work depends upon proper execution or results of the work of any such other contractor or utility owner or the City, the Contractor shall inspect and promptly report to the Engineer in writing any delays, defects or deficiencies in such work that renders it unavailable or unsuitable for such proper execution and results. The Contractor's failure to do so will constitute an acceptance of the other Work as fit and proper for integration with the Contractor's Work. The exception is latent defects in the other work.

00404 TERMINATION OF CONTRACT BY CITY (CONTRACTOR NOT AT FAULT) (9/18/07)

The Contract may be terminated, in whole or in part, at any time, by the City, at its sole discretion, without cause and for the City's convenience. Such termination will be accomplished by delivery of a written "Notice of Termination" to the Contractor, specifying the extent to which performance of the Work under the Contract or portion of the Contract shall be terminated and the date upon which such termination shall become effective.

After receipt of a Notice of Termination, except as otherwise directed by the City, the Contractor shall:

1) Stop Work under the Contract on the date and to the extent specified in the Notice of Termination.

2) Notify the City in writing of all outstanding orders, Subcontracts and contracts entered into by Contractor for performance of the Work, including the (I) name and address of the vendor, supplier or Subcontractor; (ii) a copy of the complete contract, order or Subcontract; (iii) an accounting of the Work performed and compensation earned by the vendor, supplier or Subcontractor, and (iv) such other information as the City may request to assist it in determining whether to terminate or accept assignment of the order, Subcontract or contract.

3) Upon written notice by City, terminate all Subcontracts, orders and contracts, of any tier, related to the performance of the Work that the City determines shall be terminated and not assigned. Place no further orders or Subcontracts for Goods or services, except as may be necessary for completion of that portion of the Work that has not been assigned.

4) Place no further orders or Subcontracts for Goods or services, except as may be necessary for completion of that portion of the Work that has not been terminated.

5) Settle outstanding liabilities and Claims arising out of such termination of orders and Subcontracts, with the Acceptance of the City if required (which Acceptance shall be final for the purposes of this Article).

6) Assign to the City in the manner, at the times, and to the extent directed by the City all of the rights, titles, and interests of the Contractor under such orders, contracts and Subcontracts so terminated.

7) Transfer title and deliver to the City in the manner, at the times and to the extent directed by it, the fabricated or unfabricated parts, Work in process, completed Work, supplies, and other Goods procured as a part of, or acquired in connection with the performance of the Work terminated; and completed or partially completed plans, drawings, information and other items

that would have been required (per the Specifications) to be furnished to the City if the Contract had been completed.

8) Use its best efforts to sell the property of the types referred to above in the manner, at the times, to the extent, and at the price(s) directed or authorized by the City, providing that the:

   A) Contractor is not required to extend credit to any purchaser;

   B) Contractor may acquire any such property under the prescribed conditions; and/or proceeds of any such transfer or disposition are applied or otherwise credited to reduce payments made by the City to the Contractor under the Contract.

9) Take any action that may be necessary, or that the City may direct, for the protection and preservation of the property related to the Contract that is in the possession of the Contractor and in which the City has or may acquire an interest.

10) Complete performance of that portion of the Work that has not been terminated by the Notice of Termination, as applicable and in accordance with the Contract.

After receipt of a Notice of Termination for the City's convenience, the Contractor shall submit its termination Claim to the City requesting payment of such sums as are permitted under the terms of this Article, in the form and with the certification(s) prescribed by the City for Claims and Protests. Such Claim shall be submitted promptly but in no event later than thirty (30) days from the effective date of termination, unless one or more extensions are granted in writing by the City upon written request by the Contractor during such six-month period or authorized extension thereof. However, the City may receive and act upon any termination Claim at any time after the thirty (30) days period or any extension thereof, if it determines that the facts justify such action. Upon the failure of the Contractor to submit its termination Claim within the time specified, the City will determine the amount due the Contractor, if any, on the basis of information available, and will pay the Contractor the amount so determined. Such determination shall be final and binding and payment shall be in full settlement for the Work performed under the Contract.

Subject to the provisions of this Article, the Contractor and the City may agree upon the total or partial amount to be paid to the Contractor by reason of the total or partial termination pursuant to this Article. The agreed upon amount shall under no circumstances include any sum for lost profits on the terminated portion of the Work or for consequential damages, of any kind. If agreement is reached, the Contract will be amended by Modification accordingly and the Contractor will be paid the agreed upon amount.

In the event of failure of the Contractor and the City to agree on the total amount to be paid the Contractor by reason of the termination of Work pursuant to this Article, the City will pay the Contractor the amounts determined by the City as follows, exclusive of any amounts agreed upon in accordance with the preceding Paragraph:

The Contractor’s actual cost for the Work properly performed by the Contractor as of the date of termination, including a 5% allowance for profit on such costs; plus, the reasonable cost of preserving and protecting property; plus, other reasonable costs incidental to the termination of the Work under the Contract, including expense incurred to determine the amounts due; provided however, that the maximum payable or paid for any portion of the completed Work shall not exceed the values listed in the corresponding bid item of Schedule of Values.

The total sum to be payable or paid to the Contractor, exclusive of the settlement amounts described in the Paragraph immediately above, shall not exceed the total Contract Price less the:

1) Payments made previously by the City for the Work; plus

2) A prorated portion of the total Contract Price for the terminated portion of the Work as determined by the Engineer.

Except for normal spoilage and to the extent that the City will have otherwise expressly assumed the risk of loss, the fair value (as determined by the City) of property that is destroyed, lost, stolen, or damaged (so as to become undeliverable to the City or other buyer as described above) shall be excluded from the amounts paid to the Contractor.

In arriving at the amount due the Contractor under this Article, a deduction shall be made for the following:

1) Any claim that the City may have against the Contractor in connection with the Contract; and

2) The agreed upon price for and/or proceeds from the sale of goods or other items acquired or sold by the Contractor that have not been otherwise recovered by or credited to the City.

Under such terms and conditions as it may prescribe and at its sole discretion, the City may make partial payments against costs incurred by the Contractor in connection with terminated portion of the Contract whenever the City decides that the aggregate of such payments is within the amount to which the Contractor is entitled hereunder. If the total of such payments is more than the amount finally agreed upon or determined to be due under this Article, such excess shall be payable by the Contractor to the City upon demand together with interest at a rate equal to that set forth in California Code of Civil Procedure, Section 685.010.

Under no circumstances shall the Contractor be entitled to anticipatory or unearned profits or consequential damages because of a termination of partial termination under this Article, or for any other termination by the City. The payment to the Contractor determined in accordance with this Article shall constitute the exclusive remedy of the Contractor for termination hereunder.

Anything contained in the Contract to the contrary notwithstanding, a termination under this Article shall not waive any right or claim to damages that the City may have; the City may pursue any course of action that it may have by law or under the Contract; and shall not relieve Contractor of its warranty obligations with respect to any Work performed prior to such termination.

If the termination hereunder is only for a part of the Work, the Contract Price shall be reduced by the amount of the Contract Price applicable to the portion of the Work which is terminated, including overhead and profit, on the basis of one or more of the following:

1) Unit prices stated in the Contract or agreed upon by the City and the Contractor.

2) A lump sum determined by the Engineer, based on the estimate costs including overhead and profit of the terminated portions of the Work.

00405 TERMINATION OF CONTRACT BY CITY (CONTRACTOR DEFAULT) (9/18/07)

In the event of conduct by the Contractor which is determined by the Engineer or the Inspector to constitute default, the City may either suspend the Work under the provisions of Temporary Suspension or Delay of Work of these General Conditions or, upon ten (10) calendar days' written notice to the Contractor, terminate the Contract as provided herein. Default by the Contractor shall occur whenever it shall declare bankruptcy; become insolvent or assign its assets for the benefit of its creditors; fail to provide materials, equipment, or workmanship meeting the requirements of the Specifications; disregard or violate provisions of the Contract Documents or the Engineer’s or the Inspector’s instructions; cause a material breach of the Contract; fail to prosecute the Work according to the approved progress schedule; or fail to provide a qualified representative, competent workers or Subcontractors. Upon request, the

Contractor will be provided with a hearing by the Board to contest the recommendation of the Engineer or the Inspector as to default by the Contractor.

In the event the Contract is terminated pursuant to this Article, the City may take possession of the Work and of all materials, tools, equipment, and property of the Contractor, which have been provided in connection with the Work, and may complete the Work by whatever method or means the City may select. The unpaid balance of the Contract cost for completing the Contract Work shall be used to complete the Work in accordance with the Contract Documents. If cost of completing the Work exceeds the unpaid balance, the Contractor shall pay the excess amount to the City. If such cost is less than the unpaid balance, the Contractor shall not have claim to the difference except to such extent as may be necessary, in the opinion of the Engineer, to reimburse the Contractor or the Contractor's sureties for any unpaid expense properly incurred for materials, tools, equipment, property, and labor devoted to the prosecution of the Work, or which the City shall have received the benefit. In computing such expenses, as it relates to equipment and property, the salvage value at completion of Work shall be deducted from the salvage value at the time the Contract was terminated, and the difference shall be considered as an expense. If after termination for failure of the Contractor to fulfill contractual obligations (Contractor Default), it is determined by a Court of competent jurisdiction that the Contractor had not failed to fulfill contractual obligations, the termination shall be deemed to have been for the convenience of the City. In such an event, adjustment of the Contract Price shall be made as provided in Termination of Contract by City (Contractor Not at Fault)".

00406 PARTIAL ACCEPTANCE (9/18/07)

The City shall have the right to utilize or place into service any item of equipment or other usable portion of the Work prior to completion of the entire project. The Engineer will notify the Contractor in writing identifying the specific portion or portions of the Work to be so utilized or otherwise placed into service. Following inspection by the Bureau of Contract Administration's Final Inspector and completion of a Partial Final Inspection Correction List, a "Statement of Partial Completion" will be issued.

It shall be understood by the Contractor that until a "Statement of Partial Completion" is issued, all responsibility for care and maintenance of all items or portions of the Work to be placed in use shall be borne by the Contractor. Upon issuance of a "Statement of Partial Completion", the City will accept responsibility for the protection and maintenance of all such items or portions of the Work described in the written notice, and it is further understood that the manufacturer's warranties of any affected equipment will commence not later than the date for commencement of the warranties indicated on the "Statement of Partial Completion". However, the Contractor shall retain full responsibility for satisfactory operation of the total project and the Contractor's guarantee period shall commence only after the issuance of the Statement of Completion. Such guarantee of total systems operation shall include that portion or portions of work covered by the "Statement of Partial Completion".

The issuance of a "Statement of Partial Completion" for any part of the Work shall not relieve the Contractor of its obligation to promptly remedy any omissions and latent or unnoticed defects in the Work covered by the "Statement of Partial Completion". The City shall have the right to restrict the Contractor's use of the occupied portion of the Work but shall allow the Contractor reasonable access to complete or correct items required by the Contract Documents.

The City may, if the Work is progressing satisfactorily, release part of the retention on portions of the Work for which a "Statement of Partial Completion" has been issued, provided that the following conditions have been met:

1) Partial Final Inspection corrections have been completed to the satisfaction of the Inspector on the portions of work to be utilized or placed into service;

2) The Contractor submits a written request to the Inspector for release of retention which includes a verifiable valuation of the identified portions of the Work covered by the "Statement of Partial Completion";

3) Impacted Subcontractors, major suppliers and the Contractor's Surety all agree in writing to release of retention;

4) There are no Stop Notices on file with the Board against the Contractor involving any portion of the affected Work; and

5) Both the Engineer and Inspector agree that a portion of the retention should be released for the affected Work.

00407 FINAL ACCEPTANCE (02/21/08)

When all work has been completed to the satisfaction of the Inspector, the Inspector shall request in writing a Full Final Inspection be performed by the Final Inspector. The Full Final Inspection conducted by the Final Inspector may include the Contractor and the Engineer. A Final Inspection Correction List will be provided to the Contractor and the Engineer upon completion of the Final Inspection. All corrections listed on the Final Inspection Correction List shall be completed within thirty (30) days of issuance of the Final Inspection Correction List. Failure to complete all corrections within thirty (30) days of issuance of the Final Inspection Correction List shall result in the Final Inspection being performed again.

The date of completion of the Project shall be the date of Final Field Acceptance of the Project when all physical corrections have been completed. The Final Inspector will issue the Statement of Completion indicating the date of Final Field Acceptance of the Project.

If there are no physical corrections to be completed following the Full Final Inspection, the Final Inspector will issue the Statement of Completion indicating the date of Final Field Acceptance of the Project.

Final Field Acceptance of the Project shall establish the following:

1) Start date of the Contractor's material and workmanship Guaranty-Warranty for the total Project.

2) Start date of any equipment or material warranties which had not previously been started.

3) Date the City assumes responsibility for maintenance, security, and safety of the Project.

Upon issuance of the Statement of Completion by the Final Inspector and completion of all administrative requirements of the contract, the Inspector of Public Works and City Engineer shall prepare a Joint Report which contains the recommendation of the Inspector of Public Works that the Board accept the Project. The Board will formally accept the project based on the information contained in the Joint Report.

00408 LIQUIDATED DAMAGES (9/18/07)

Time is of the essence in completing the Work required by the Contract. If the Contractor fails or refuses to complete the Work or any part thereof within the time fixed by the terms of the Contract, or any approved extension thereof, the actual damage to the City due to the delay will be difficult or impossible to determine. In lieu thereof, the Contractor shall pay to the City, as fixed and agreed, liquidated damages for each day of delay in completion, the sum or sums as set forth in the Contract Documents. The Contractor shall be liable for the amount thereof. The City reserves the right, however, to terminate the

Contractor's completion of the Work, charging against the Contractor and its sureties any excess cost occasioned the City thereby, together with liquidated damages accruing until such time as the City may reasonably complete the Work.

Permitting the Contractor to continue and complete the Work, or any portion thereof, after the time fixed herein for completion, or after the expiration of any extensions of said time, shall in no way operate as a waiver on the part of the City of any of its rights under the Contract.

00409 – 00499 NOT USED

00500 CHANGES AND EXTRA WORK (9/18/07)

The Engineer may, at any time, without notice to the Sureties, by written order designated or indicated to be a Change Order, order performance of extra work or make any change, addition or deletion in the Work, including but not limited to changes in the Specifications including Plans and designs; in the time, method or manner of performance of the Work; in the City furnished facilities, equipment, materials, services, or site; or directing acceleration in the performance of the Work.

Upon receipt of this Change Order, the Contractor shall promptly proceed with the Work covered thereby, which shall be performed in accordance with the provisions of the Contract Documents except as otherwise specifically provided.

In the event that Contractor receives any written order or direction by the Engineer or Inspector that is not so designated or indicated to be a Change Order, but which Contractor believes to constitute an extra, change, addition or deletion in the Work, then Contractor shall, prior to performance of any Work related thereto, give written notice to the Engineer and Inspector confirming Contractor's belief that such order or direction is believed to be a Change Order within one (1) working day of Contractor's receipt of such order or direction. Compensation for the extra, change, addition, or deletion in the Work will be in accordance with the provisions of "Change Orders" of the General Requirements.

Contractor conclusively waives any right to additional compensation, costs, expenses, damages or extension of time associated with an extra, change, addition or deletion to the Work that is performed by Contractor without either (i) a written order signed by the Engineer designated or indicated to be a Change Order and any change, addition or deletion, or (ii) a written notice issued by Contractor in accordance with the provisions of this Article.

During the progress of the Work, it may be necessary for the Engineer to issue written field orders in the form of an Emergency Change Order. Upon receipt, The Contractor shall immediately proceed with the Engineer's written directive to the limits described in Authority of the Board, Engineer, and Inspector.

Except as provided in this Article, no other order, statement, or conduct of the Engineer or Inspector shall be treated as a change under this Article or shall entitle the Contractor to an adjustment in the Contract Price or Contract Completion Date.

Except for claims based on defective Specifications, no Claim for any change under this Article shall be allowed for any costs incurred more than twenty (20) calendar days before the Contractor gives written notice as required. Except as otherwise provided in the Contract Documents, in the case of defective specifications for which the Engineer is responsible, the adjustment shall include any increased cost the Contractor reasonably incurred in attempting to comply with those defective specifications.

If the Contractor intends to assert a Claim for an adjustment in the Contract Price under this Article, it must, within twenty (20) calendar days after receipt of a written Change Order or the furnishing of a written confirmation notice as hereinbefore specified, submit a written statement to the Engineer setting forth the general nature and monetary extent of such claim and all factual grounds therefor, including documented actual costs. The Contractor may include the statement of claim in the written notice as

hereinbefore specified. Failure to comply with the twenty (20) calendar day notice requirement shall be deemed a waiver of Claims by the Contractor.

No adjustment shall be made under this Article for any suspension, delay, interruption, change or any other cause, to the extent that an adjustment is provided for or excluded under any other provision of the Contract.

Recovery of compensation, costs, expenses or damages resulting from delay, disruption, hindrance, or interference in the performance of the Work (including without limitation interruption of schedules, extended, excess or extraordinary field overhead and indirect overhead costs, loss of productivity and the impact, ripple or cumulative effect on other Work), shall not be permitted, and all rights thereto are conclusively waived by Contractor.

No Claim by the Contractor shall be allowed if the Claim is made after final payment under this Contract.

00501 DIFFERING SITE CONDITIONS (9/18/07)

Upon discovery and before further disturbance of any differing site conditions, the Contractor shall immediately notify the Inspector and the Engineer, followed by a written notice to the Engineer within twenty-four (24) hours of subsurface or latent physical conditions at the site differing materially from those indicated in the Contract Documents; or unknown physical conditions at the site, of an unusual nature, differing materially from those ordinarily encountered and generally recognized as inherent in the Work of the character provided for in this Contract; or materially differing from that represented in the Contract Documents which the Contractor believes may be hazardous waste (as defined in the California Health and Safety Code and is required to be removed to a Class I, Class II or Class III disposal site in accordance with provisions of existing law).

The Engineer will promptly investigate the conditions. If the Engineer finds that conditions materially differ and will cause an increase or decrease in the Contractor's cost or the time required to perform any part of the Work, the Engineer will adjust the Contract by Change Order.

If the Contractor disagrees with the Engineer's determination the Contractor may request an adjustment to the Contract Price or Contract Completion Date. Within twenty (20) calendar days after it first discovered or should have discovered in the exercise of diligence and extreme care, the existence of such Differing Site Condition, submit a written statement setting forth a detailed cost breakdown described in "Change Orders" of the General Requirements. The statement must include the Contractor's basis and calculation of the costs saved or incurred, detailed information demonstrating the effect on the Contractor's schedule of performance (in the same manner as required by the Contract Documents for requesting an extension of time), identification of the Escrow Bid Documents that formed the basis of the Contractor's Bid to perform the Work affected by such conditions, and a complete and detailed explanation of the factual basis for the request.

Failure by the Contractor to strictly comply with the requirements of this Article concerning the timing and content of any notice of Differing Site Conditions or of any request for adjustment in Contract Price or Contract Completion Date based on Differing Site Conditions shall be deemed a waiver of any Claim by the Contractor for increase in the Contract Price or extension of the Contract Completion Date by reason of such conditions.

No Claim by the Contractor for an adjustment hereunder shall be allowed if asserted after final payment under this Contract.

00502 – 00599 NOT USED

00600 CLAIMS AND PROTESTS (9/18/07)

A Claim that involves an extra, change, addition or deletion to the Work as set forth in Changes and Extra Work shall arise upon issuance of a final decision of the Engineer denying, in whole or in part, a request for adjustment in the Contract Price or Contract Completion Date; provided however, that failure to comply with the requirements of the articles for Changes and Extra Work or Differing Site Conditions shall be conclusively deemed to constitute grounds to deny such Claim.

A Claim that does not involve an extra, change, addition or deletion to the Work may be asserted only if the Contractor shall immediately and prior to performing the Work affected thereby give written notice to the Engineer and the Inspector of such circumstances and of Contractor's intention to file a Claim based thereon. Unless otherwise directed by the Engineer, the Contractor shall proceed without delay to perform the Work and to conform to any order, instruction, or decision of the Engineer with respect thereto.

The Contractor shall, within twenty (20) calendar days after it first knew, or in the exercise of diligence and extreme care should have known, of the circumstances giving rise to the Claim, file a written Claim with the Engineer, stating in detail all objections, grounds and reasons therefor. The Contractor shall, upon instruction by the Engineer or the Inspector, provide, within ten (10) days or such other time as agreed to between the Engineer, and the Contractor, any and all documents, records or other materials identified by the Engineer or the Inspector as necessary for the resolution of the Contractor's Claim.

Claims seeking time extensions shall be accompanied by such documentation as is required by "Contractor's Construction Schedule and Reports" of the General Requirements. Claims seeking recovery of compensation or adjustments to the Contract Price, whether based on extras, changes, additions or deletions to the Work, shall be in the form of Change Order Cost Quotations prepared in accordance with and subject to all of the requirements of "Change Orders" of the General Requirements, including without limitation the prohibition on use of "total cost" and "modified total cost" methodologies.

Contractor waives all rights to assert any claims or seek any relief in the form of extensions of time or recovery of additional compensation, costs, expenses, damages from the City that are not presented as a Claim in the manner specified and within the time stated herein. Contractor further hereby agrees that in the interest of avoiding the additional expense and potential inequity of piecemeal resolution of Claims, all decisions by Engineer shall be final and binding not only as to all matters asserted in the Claim, but also as to all matters (including without limitation all rights to extensions of time and recovery of extra compensation, costs, expenses and damages) not asserted in the Claim that were known to Contractor, or that could have been reasonably discovered by Contractor in the exercise of diligence and extreme care, at the time of submission of the Claim and that are in any way related to the subject matter of the Claim. All orders, instructions and decisions of the Engineer or the Inspector will be limited to matters properly falling within their respective authority as specified in Authority of the Board, Engineer and Inspector.

The Contractor will be informed of the Engineer's or the Inspector's decision within thirty (30) days after the Contractor last submits data pertinent to the Claim previously mentioned. In the case of a Claim that involves an extra, change, addition or deletion to the Work as set forth in Changes and Extra Work, if the Contractor accepts the decision of the Engineer or Inspector, then the Contractor and City shall enter into a Change Order adjusting the Contract Price and Contract Completion Date in accordance with such decision. In case a Claim does not involve an extra, change, addition or deletion to the Work as set forth in Changes and Extra Work and the Contractor accepts the decision of the Engineer or Inspector, then the Contractor and City shall enter into a Change Order setting forth the terms of the decision and, if appropriate, its effect on the Contract Price or Contract Completion Date. If the Contractor does not accept the decision of the Engineer or Inspector, it is recommended that further appeal of the Engineer's decision be conducted in accordance with the Issue Resolution Ladder, as defined in "Opportunity to Partner" of the General Requirements. If the dispute cannot be settled, the Contractor must elevate the appeal to the Dispute Review Board (if provided for under the terms of the General Requirements) or to

the Board of Public Works (if the Contract Documents do not provide for a Dispute Resolution Board) in writing within twenty (20) calendar days after receipt of the Engineer's decision. The Board shall afford the Contractor an opportunity to be heard and to offer evidence in support of its appeal. All determinations of the Board with respect to Claims shall be final and binding.

In all matters concerning the validity, interpretation, performance, effect or otherwise of the Contract, the Federal regulations (if and to the extent expressly incorporated by reference in the Contract Documents), the laws of the State of California, and the Charter of the City of Los Angeles shall govern and be applicable. Pending final disposition of a Claim, the Contractor shall proceed diligently with the performance of the Contract and in accordance with the previously mentioned decision.

Any Claim, including without limitation any Claim filed on behalf of or having its source in a claim by Subcontractor, Sub-Subcontractor, or Supplier, at any tier, which the Contractor chooses to make to the City, shall be accompanied by the certification language set forth below signed by a responsible managing officer of the Contractor's organization, who has the authority to sign Subcontracts or Purchase Orders on behalf of the Contractor, and who has personally investigated and confirmed the truth and accuracy of the matters set forth in such certification. Submission of certification in accordance herewith is a condition precedent to the City's consideration of or decision on the Claim and to the filing and maintenance of any legal action or proceeding to enforce or recover monies under such Claim. Failure to submit such a certification along with the Claim shall result in the Claim being returned to the Contractor without any decision and shall waive the Contractor's right to pursue the Claim either on its own behalf or on behalf of such Subcontractor or Supplier.

I hereby certify under penalty of perjury that I am a managing officer of _____(Contractor's name) and that I have reviewed the Claim presented herewith on Contractor's behalf and/or on behalf of (Subcontractor's/Supplier's name(s)) ___ and that the following statements are true and correct:

1) The facts alleged in or that form the basis for the Claim are true and accurate; and,

2) Contractor does not know of any facts or circumstances, not alleged in the Claim, that by reason of their not being alleged render any fact or statement alleged in the Claim materially misleading; and,

3) Contractor has, with respect to any request for money or damages alleged in or that forms the basis for the Claim, reviewed the job cost records (including those maintained by Contractor and by any Subcontractor or Supplier, of any tier, that is asserting all or any portion of the Claim) and confirmed with mathematical certainty that the losses or damages suffered by Contractor and /or such Subcontractor or Supplier were in fact suffered in the amounts and for the reasons alleged in the Claim; and,

4) Contractor has, with respect to any request for extension of time or claim of delay, disruption, hindrance or interference alleged in or that forms the basis for the Claim, reviewed the job schedules (including those maintained by Contractor and by any Subcontractor or Supplier, of any tier, that is asserting all or any portion of the Claim) and confirmed on an event-by-event basis that the delays or disruption suffered by Contractor and /or such Subcontractor or Supplier were in fact experienced for the durations, in the manner, and with the consequent effects on the time and/or sequence of performance of the Work, as alleged in the Claim; and,

5) Contractor has not received payment from City for, nor has Contractor previously released City from, any portion of the Claim.

Signature: _____

Name: _____

Title: _____

Company: _____

Date: _____

No Claim by the Contractor shall be allowed if made after final payment under this Contract.

00601 COMMENCEMENT OF STATUTE OF LIMITATIONS (11/21/01)

Any applicable statute of limitations shall commence to run and any alleged cause of action by the Contractor against the City arising out of or related to the Project shall be deemed to have accrued in any and all events no later than 30 days after Contractor's submittal of its last application for progress payment of Contract or Change Order Work satisfactorily performed.

00602 GOVERNING LAW (11/21/01)

The terms and conditions of this Contract shall be construed and interpreted under, and all respective rights and duties shall be governed by, the laws of the State of California. Wherever applicable each provision of these Contract Documents shall be interpreted in such a manner as to be effective and valid under applicable law, but if any provision of these Contract Documents shall be prohibited by or invalid under applicable law, such provision shall be ineffective to the extent of such prohibition or invalidity, without invalidating the remainder of such provision or the remaining provisions of these Contract Documents.

Unless otherwise provided in this Contract, all claims, counterclaims, disputes and other matters in question between the City and the Contractor arising out of or relating to this Contract or the breach of it will be decided by a Court of competent jurisdiction. It is understood that this Contract is executed and to be performed within the City and County of Los Angeles.

00603 VENUE (2/09/95)

This Contract will be executed and performed within the City and County of Los Angeles, California.

00604 NO WAIVER OF RIGHTS (4/12/95)

Neither the inspection by the City, nor any order by the City for payment of money, nor any payment for or acceptance of the whole or any part of the Work by the City, nor any extension of time, nor any possession taken by the City, shall operate as a waiver of any provision of this Contract, or any power herein reserved to the City, or any right to damages herein provided, nor shall any waiver of any breach in this Contract be held to be a waiver of any other or subsequent breach.

00605 ACCEPTANCE OF FINAL PAYMENT CONSTITUTES RELEASE (4/12/95)

The acceptance by the Contractor of final payment shall release the City, the Engineer, the Inspector, their officers, agents, representatives, or employees, as representatives of the City, from all claims and all liability to the Contractor for all things done or furnished in connection with the Work and every act of the City relating to or arising out of the Work.

00606 PATENTS AND COPYRIGHTS (10/17/01)

The Contractor shall include in its Bid the patent fees or royalties on any patented article or process which may be furnished or used in the Work. The Contractor shall indemnify and hold the City harmless from any legal action that may be brought for infringement of patents. The Contractor's attention is directed to "Notice of Patents, Data, and Copyright Regulations" of the Federal Labor Standards.

The Contractor shall bear all costs arising from the use of patented goods and /or processes used on and/or incorporated into the Work. When use of these goods and/or processes is judged to be an infringement and their use is banned, the Contractor, at its own expense, shall, with concurrence of the Engineer, do one of the following:

1) Secure for the City the right to continue using goods and/or processes by suspension of the injunction or by procuring a license(s);

2) Replace said goods and/or processes with non-infringing goods and /or processes;

3) Modify said goods and/or processes so that they become non-infringing; or

4) Remove said goods and/or processes and refund the sum paid therefor without prejudice to any other rights of the City.

The preceding shall not apply to any goods manufactured to the detailed design of the City contained in the Contract Documents.

00607 PUBLIC RECORDS ACT (4/06/00)

All records, documents, Plans, specifications, and all other information relating to the conduct of the City's business, including information submitted by the Contractor, shall become the exclusive property of the City and except as provided by law shall be deemed public records. Said information shall be subject to the provisions of the California Public Records Act (Government Code Sections 6250 et seq.).

Under no circumstances will the City be responsible or liable to the Contractor, submitter or any other party for the disclosure of any records or information submitted to the City, regardless of whether such records or information are labeled "Trade Secret", "Confidential", or "Proprietary" (or words to similar effect) and regardless of whether the disclosure is required by law or a court order or occurs through inadvertence, mistake, or negligence on the part of the City or its officers, employees, and/or contractors.

The City will not advise as to the nature or content of documents entitled to protection from disclosure under the California Public Records Act", including interpretations of the Act or the definition of "Trade Secret". The submitting party shall be solely responsible for all determinations made under the Act, and where appropriate for clearly and prominently marking every page or sheet of information with "Trade Secret", "Confidential", or "Proprietary". Each submitting party is advised to contact its own legal counsel concerning the California Public Records Act and its applicability to the submitting party's own circumstances.

In the event of litigation concerning the disclosure of any information submitted by the submitting party, the City's sole involvement will be as a stakeholder, retaining the information until otherwise ordered by a court. The submitting party, at its sole expense and risk, shall be responsible for any and all fees and costs for prosecuting or defending any action concerning the information, and shall indemnify and hold the City harmless from all costs and expenses including attorneys' fees, in connection with such action.

END OF SECTION

THIS PAGE INTENTIONALLY LEFT BLANK

BUREAU OF ENGINEERING

MACARTHUR LAKE STORMWATER CAPTURE PROJECT
WORK ORDER NO. S33WMLRP, S343MSWC, S043MSWC

GENERAL REQUIREMENTS

JANUARY 2026
100% DESIGN SUBMITTAL

City of Los Angeles
California

Department of Public Works
Bureau of Engineering

ENGINEERING
CITY OF LOS ANGELES

THIS PAGE INTENTIONALLY LEFT BLANK

TABLE OF CONTENTS
DIVISION 01 - GENERAL REQUIREMENTS

SUMMARY

01111 ABBREVIATIONS AND REFERENCE STANDARDS
01112 DESCRIPTION OF WORK
01113 DIVISIONS OF TECHNICAL SECTIONS OF PROJECT MANUAL
01114 ISSUANCE OF DRAWINGS AND THE PROJECT MANUAL
01115 MANDATORY PROVISIONS
01116 ELECTRONIC DOCUMENT CONTROL
01120 INTERFACE / COORDINATION REQUIREMENTS
01140 CONTRACTOR'S USE OF THE PREMISES
01150 STORAGE OF MATERIALS AND EQUIPMENT

PRICE AND PAYMENT PROCEDURES

01212 FIXED CASH ALLOWANCE ITEMS
01251 CHANGE ORDER REQUESTS
01253 DIFFERING SITE CONDITIONS
01254 CHANGE ORDERS
01255 PRICE REDUCTION FOR DEFECTIVE COST OR PRICING DATA
01270 MEASUREMENT OF QUANTITIES FOR UNIT PRICE WORK
01280 MEASUREMENT AND PAYMENT
01291 NOTICE TO WITHHOLD AND/OR STOP NOTICE
01292 PAYMENTS
01298 SCHEDULE OF VALUES / CONTRACT PRICE BREAKDOWN

ADMINISTRATIVE REQUIREMENTS

01311 PRECONSTRUCTION SAFETY CONFERENCE
01312 PROJECT MEETINGS
01313 WORK BY CITY OR OTHERS
01321 CONTRACTOR'S CONSTRUCTION SCHEDULE AND REPORTS
01322 CONSTRUCTION PROGRESS PHOTOGRAPHY
01323 CONSTRUCTION STATUS REPORTS
01330 SHOP DRAWINGS / SUBMITTALS
01350 AUDIT AND ACCESS TO RECORDS
01351 ESCROW BID DOCUMENTS
01353 OPPORTUNITY TO PARTNER

QUALITY REQUIREMENTS

01410 REGULATORY REQUIREMENTS
01411 CONFINED SPACE ENTRY
01420 UNITS OF MEASURE
01421 SYMBOLS
01430 MANUFACTURER'S FIELD SERVICES
01451 APPROVAL OF ELECTRICAL EQUIPMENT
01452 INSPECTION OF THE WORK
01453 SAMPLING, TESTING AND FABRICATION INSPECTION
01454 WEIGHING AND METERING EQUIPMENT
01455 CALIBRATION OF TESTING EQUIPMENT

TEMPORARY FACILITIES AND CONTROLS

01561 ENVIRONMENTAL CONTROL
01562 ENVIRONMENTAL MITIGATION OR CONDITIONS
01563 POLLUTION CONTROL - SEWAGE SPILL PREVENTION AND RESPONSE REQUIREMENTS
01571 STORMWATER POLLUTION CONTROL MEASURES FOR CONSTRUCTION ACTIVITIES
01572 CONSTRUCTION AND DEMOLITION WASTE MANAGEMENT
01573 EXCAVATION, SHORING, FORMS, AND FALSEWORK
01581 PROJECT SIGNS

PRODUCT REQUIREMENTS

01601 BUY CLEAN CALIFORNIA ACT
01611 GUARANTY / WARRANTY
01630 SUBSTITUTIONS AND "OR EQUAL" SUBMITTAL

EXECUTION REQUIREMENTS

01711 SITE INVESTIGATION
01712 SUBSURFACE DATA
01721 MOBILIZATION
01722 SURVEYING
01723 RIGHT OF WAY
01731 CUTTING AND PATCHING
01740 REMOVAL, CLEANUP, AND DEMOBILIZATION
01750 STARTUP ASSISTANCE
01770 PROJECT CLOSEOUT
01781 SPARE PARTS
01782 TECHNICAL MANUALS
01783 PROJECT RECORD DOCUMENTS

FACILITY OPERATION

01810 FUNDAMENTAL COMMISSIONING REQUIREMENTS
01813 PREFUNCTIONAL CHECKLISTS
01820 OPERATIONS AND MAINTENANCE TRAINING

SECTION 01111
ABBREVIATIONS AND REFERENCE STANDARDS

1.1 ABBREVIATIONS

A. The abbreviations herein, together with others in general use, are applicable to this Project Manual, Contract Drawings, and other Contract Documents.

All abbreviations and symbols used on Contract Drawings for structural steel construction shall conform to those given by the "Manual of Steel Construction" published by the American Institute of Steel Construction, Inc.

B. Common Usage: Whenever the following abbreviations are used, they shall have the meanings indicated:

ABAN	Abandon
ABAND	Abandoned
ABUT	Abutment
ABS	Acrylonitrile – butadiene – styrene
AC	Asphalt concrete
ACP	Asbestos cement pipe
ACWS	Asphalt concrete wearing surface
ADA	Americans with Disabilities Act
AGB	Alley grating basin
AL	Allowance
ALT	Alternate
AMER STD	American Standard
AQMD	Air Quality Management District
ARHM	Asphalt-rubber hot-mix
ATSAC	Automated Traffic Surveillance and Control System
AT&T	Local and long distance telephone company (formerly SBC and Pacific Bell)
AWG	American Wire Gage (nonferrous wire)
BAGR	Bridge approach guard railing
BB	Beginning of Bridge
BC	Beginning of curve
BCR	Beginning of curb return
BDRY	Boundary
BF	Bottom of footing
BM	Bench mark
BMP	Best Management Practice
BPW	Board of Public Works
BSJ	Bell and spigot joint
BSL	Bureau of Street Lighting
BVC	Beginning of vertical curve
B/W	Back of wall
C/C	Center to center
CAB	Crushed aggregate base
CAC	California Administrative Code
CAP	Corrugated aluminum pipe
CASQA	California Storm Water Quality Association
CB	Catch Basin
Cb	Curb

CBP	Catch Basin Connection Pipe
CBR	California Bearing Ratio
CCR	California Code of Regulations
CCTV	Closed Circuit TV
CDS	Hydrodynamic Separator Technology
CF	Curb face or Cubic foot
C&G	Curb and gutter
CGB	Curbside grating basin
CFR	Code of Federal Regulations
CIDH	Cast-in-drilled-hole
CIP	Cast iron pipe or Cast-in-place
CIPP	Cast-in place pipe
CL	Clearance, center line
CLF	Chain link fence
CLSM	Controlled Low Strength Material
CMB	Crushed miscellaneous base
CMC	Cement mortar-coated
CML	Cement mortar-lined
CMP	Corrugated Metal Pipe
CO	Cleanout (sewer)
COL	Column
CONC	Concrete
CONN	Connection
CONST	Construct, Construction
COORD	Coordinate
CQC	Contractor Quality Control
CSP	Corrugated steel pipe
CTB	Cement treated base
CV	Check valve
CY	Cubic yard
D	Load of pipe
dB	Decibels
DBE	Disadvantaged Business Enterprise
DBL	Double
DF	Douglas fir
DFT	Dry Film Thickness
DIA	Diameter
DIP	Ductile iron pipe
DL	Dead load
DMBB	Double metal beam barrier
DT	Drain Tile
DWG	Drawing
DWPPS	Los Angeles Department of Water & Power, Power System
DWPWS	Los Angeles Department of Water & Power, Water System
DWY	Driveway
DWY APR	Driveway approach
EA	Each
EB	End of bridge
EC	End of curve
ECR	End of curb return
EF	Each face
EG	Edge of gutter
EGL	Energy grade line
El	Elevation

ELC	Electrolier lighting conduit
ELT	Extra long ton
ENGR	Engineer, Engineering
EP	Edge of pavement
EPA	Environmental Protection Agency
ESA	Environmentally Sensitive Area
ESAL	Equivalent Single Axle Load
ESRP	Emergency Spill Response Plan
ESMT	Easement
ETB	Emulsion-treated base
EVC	End of vertical curb
EXC	Excavation
EXP JT	Expansion joint
EXST	Existing
F	Fahrenheit
F&C	Frame and cover
F&I	Furnish and install
FAB	Fabricate
FAS	Flashing arrow sign
FD	Floor drain
FDN	Foundation
FED SPEC	Federal Specification
FG	Finished grade
FH	Fire hydrant
FL	Flow line
FRP	Fiberglass reinforced plastic
FRPM	Fiberglass reinforced plastic mortar
FS	Finished surface
FTA	Fully traffic actuated
FT-LB	Foot-pound
FTG	Footing
FW	Face of wall
GA	Gauge
GALV	Galvanized
GC	Grade change
GCASP	State General Construction Activity Stormwater Permit
GIP	Galvanized iron pipe
GL	Ground line or grade line
GM	Gas meter
GP	Guy pole
GR	Grade
GRTG	Grating
GSP	Galvanized steel pipe
GTE	General Telephone Company
H	High or height
HB	Hose bib
HC	House connection
HDPE	High density polyethylene
HDWL	Headwall
HGL	Hydraulic grade line
HORIZ	Horizontal
HP	Horsepower
HPG	High pressure gas
HPS	High pressure sodium (Light)

HS	High strength
HYDR	Hydraulic
ID	Inside diameter
INCL	Including
INSP	Inspection
INV	Invert
IP	Iron pipe
IPW	Inspector of Public Works
JC	Junction chamber
JCT	Junction
JS	Junction structure
JT	Joint
L	Length
LAAC	Los Angeles Administrative Code
LAB	Laboratory
LADBS	Los Angeles Department of Building and Safety
LADGS	Los Angeles Department of General Services
LADOT	Los Angeles Department of Transportation
LACDPW	Los Angeles County Department of Public Works
LAMC	Los Angeles Municipal Code
LARWQCB	Los Angeles Regional Water Quality Control Board
LAT	Lateral
LB	Pound
LD	Local depression
LF	Linear foot
LH	Lamp hole
LL	Live load
LOL	Layout line
LONG	Longitudinal
LP	Lamp post
LPS	Low pressure sodium (Light)
LS	Lump sum
LTS	Lime treated soil
MA	Mast Arm
MAINT	Maintenance
MAX	Maximum
MB	Metal beam
MBB	Metal beam barrier
MBGR	Metal beam guard railing
MBE	Minority Business Enterprise
MCR	Middle of curb return
MEAS	Measure
MED	Median
MH	Manhole, maintenance hole
MIL SPEC	Military Specification
MISC	Miscellaneous
MOD	Modified, modify
MON	Monument
MOV	Motor Operated Valve
MSM	Mandatory subcontracting minimum
MTA	Metropolitan Transportation Authority (of LA County)
MTH	Month
MTL	Material
MULT	Multiple

MUTCD	Manual on Uniform Traffic Control Devices
MVL	Mercury vapor light
MWD	Metropolitan Water district
NOI	Notice of Intent
NPDES	National Pollutant Discharge Elimination System
NRCP	Nonreinforced concrete pipe
OBE	Other Business Enterprise
OBS	Obsolete
OC	On center
OD	Outside diameter
OE	Outer edge
OH	Overhead
OPP	Opposite
ORIG	Original
OSA	Office of the State Architect
OSHA	Occupational Safety and Health Administration (Dept. Of Labor)
PACBELL	Pacific Bell (Pacific Telesis Group)
PAV	Pressure Aging Vessel
PB	Pull box
PC	Point of curvature
PCC	Portland cement concrete or Point of compound curvature
PCVC	Point of compound vertical curve
PE	Polyethylene
PG	Performance Graded
PI	Point of intersection
PL	Property line
PMB	Processed miscellaneous base
POC	Point on curve
POT	Point on tangent
PP	Power pole
PRC	Point of revere curve
PRVC	Point of reverse vertical curve
PSI	Pounds per square inch
PT	Point of tangency
PVC	Polyvinyl chloride
PVMT	Pavement
PVT R/W	Private right-of-way
Q	Rate of flow in cubic feet per second
QA	Quality Assurance
QC	Quality Control
QUAD	Quadrangle, Quadrant
R	Radius
R&O	Rock and oil
R/W	Right-of-way
RA	Recycling agent
RAC	Recycled asphalt concrete
RAP	Reclaimed asphalt pavement
RBAC	Rubberized asphalt concrete
RC	Reinforced concrete
RCB	Reinforced concrete box
RCC	Rail Construction Corporation
RCE	Registered civil engineer
RCP	Reinforced concrete pipe
RCV	Remote control valve

REAS	Rubberized Emulsion-Aggregate Slurry
REF	Reference
REINF	Reinforced or reinforcement
RES	Reservoir
RGE	Registered geotechnical engineer
RR	Railroad
RSE	Registered structural engineer
RTE	Registered traffic engineer
RTFO	Rolling Thin Film Oven
S	Slope
SCAQMD	South Coast Air Quality Management District
SCCP	Steel cylinder concrete pipe
SCG	Southern California Gas Company
SCHED	Schedule
SCRRA	Southern California Regional Rail Authority
SD	Storm drain
SDR	Standard thermoplastic pipe dimension ratio (ratio of pipe O.D. to minimum wall thickness)
SE	Sand Equivalent
SEC	Section
SF	Square foot
SI	International System of Units (Metric)
SOCB	Side opening catch basin
SPEC	Specifications
SPPWC	Standard Plans for Public Works Construction
SR	Standard ratio
SRJ	Steel ring joint (for RCP)
SS	Sanitary sewer
SSB	Select sub-base
SSPWC	Standard Specifications for Public Works Construction
ST HWY	State highway
STA	Station
STD	Standard
STR	Straight
STR GR	Straight grade
STRUC	Structural/Structure
SW	Sidewalk
SWD	Sidewalk drain
SWMP	Storm Water Management Plan
SWPPP	Storm Water Pollution Prevention Plan
SWRCB	State (of California) Water Resources Control Board
SY	Square yard
TAN	Tangent
TC	Top of curb
TCP	Traffic control plan
TEL	Telephone
TF or T/F	Top of footing
TH	Test hole
TOPO	Topography
TR	Tract
TRANS	Transition
TS	Traffic signal or transition structure
TSC	Traffic signal conduit
TSS	Traffic signal standard

TW	Top of wall
TYP	Typical
USA	Underground Service Alert
V	Volt
VAR	Varies, Variable
VB	Valve box
VC	vertical curve
VCP	Vitrified clay pipe
VECP	Value Engineering Change Proposal
VERT	Vertical
VOL	Volume
VT	Variable thickness
W	Wider or width
WATCH	Work Area Traffic Control Handbook
WBE	Women Business Enterprise
WDID	Waste Discharge Identification Number
WI	Wrought iron
WM	Water meter
WPCP	Water Pollution Control Plan
WPJ	Weakened plane joint
WUT	Western Union Telegraph
WWECP	Wet Weather Erosion Control Plan
XCONN	Cross connection
XSEC	Cross section

C. Institutions: Wherever the following abbreviations are used they shall have the meanings indicated:

AASHTO	American Association of State Highway and Transportation Officials
ACI	American Concrete Institute
ACRI	Air Conditioning and Refrigeration Institute
ADA	Americans with Disabilities Act
AGA	American Gas Association
AGMA	American Gear Manufacturers' Association
AI	Asphalt Institute
AISC	American Institute of Steel Construction
AISI	American Iron & Steel Institute
AITC	American Institute of Timber Construction
AAMA	American Architectural Manufacturer’s Association
AMCA	Air Movement and Control Association
ANSI	American National Standards Institute
APA	American Plywood Association
API	American Petroleum Institute
APWA	American Public Works Association
AQMD	Air Quality Management District
AREA	American Railway Engineering Association
ASCE	American Society of Civil Engineers
ASHRAE	American Society of Heating, Refrigerating, and Air Conditioning Engineers
ASME	American Society of Mechanical Engineers
ASQC	American Society for Quality Control
ASTM	American Society for Testing and Materials
AWPA	American Wood Preservers Association

AWPI	American Wood Preservers Institute
AWS	American Welding Society
AWWA	American Water Works Association
BHMA	Building Hardware Manufacturer's Association
CAC	California Administrative Code
CAL/ABL	State of California/Architectural Barriers Laws
CAL/OSHA	State of California/Occupational Safety and Health Administration
CALTRANS	California Department of Transportation
CASQA	California Stormwater Quality Association
CBM	Certified Ballast Manufacturers
CITY	City of Los Angeles
CRSI	Concrete Reinforcing Steel Institute
CSI	Construction Specifications Institute
EIA/TIA	Electronic Industries Association
EPA	Environmental Protection Agency
ETL	Department of Building & Safety Electrical Test Laboratory
FCI	Fluid Control Institute, Inc.
FIA	Factory Insurance Association
FM	Factory Mutual Association
FS	Federal Specifications
GA	Gypsum Association
GRI	Geosynthetic Research Institute
ICBO	International Conference of Building Officials
ICEA	Insulated Cable Engineers Association
IEEE	Institute of Electrical and Electronics Engineers
ISA	Instrument Society of America
LA	City of Los Angeles
LABC	City of Los Angeles Building Code
LAMC	City of Los Angeles Municipal Code
NAAMM	National Architectural Association of Metal Manufacturers
NEC	National Electrical Code
NECA	National Electrical Contractors Association
NEMA	National Electrical Manufacturers Association
NFC	National Fire Code
NFPA	National Fire Protection Association
NWMA	National Wood Manufacturer's Association
NWWDA	National Wood Window and Door Association
NOAA	National Oceanic and Atmospheric Administration (Dept. of Commerce)
OSA	Office of the State Architect
OSHA	Occupational Safety and Health Administration (Dept. of Labor)
PCA	Portland Cement Association
RA	Rule of General Application – Department & Safety
RCSC	Research Council on Structural Connections of the Engineering Foundation
SAMA	Scientific Apparatus Manufacturer's Association
SDI	Steel Deck Institute
SMACNA	Sheet Metal and Air Conditioning Contractor's National Association
SSPC	Steel Structures Painting Council
SSPWC	Standard Specifications for Public Works Construction
SWRCB	State Water Resources Control Board
UBC	Uniform Building Code, International Conference of Building Officials

UL	Underwriters Laboratories, Inc.
USGS	United States Geological Survey
VERIZON	Verizon Communications (Formerly General Telephone & Electronics
WATCH	Work Area Traffic Control Handbook
WCLIB	West Coast Lumber Inspection Bureau
WCRSI	Western Concrete Reinforcing Steel Institute
WIC	Woodwork Institute of California
WRI	Wire Reinforcement Institute
WWPA	Western Wood Products Association

1.2 REFERENCE STANDARDS

A. Applicable Publications: Whenever in these Specifications/Project Manual references are made to published specifications, codes, standards, or other requirements, it shall be understood that wherever no date is specified, only the latest specifications, standards, or requirements of the respective issuing agencies which have been published as of the date that the Work is advertised for bids shall apply; except to the extent that said standards or requirements may be in conflict with applicable laws, ordinances or governing codes. No requirements set forth herein or shown on the Drawings shall be waived because of any provision of, or omission from, said standards or requirements.

B. Specialists' Assignments: In certain instances, specification text requires (or implies) that specific work is to be assigned to specialists or expert entities, who must be engaged for the performance of that work. Such assignments shall be recognized as special requirements over which the CONTRACTOR has no choice or option. These requirements shall not be interpreted so as to conflict with the enforcement of building codes and similar regulations governing the Work; also they are not intended to interfere with local union jurisdiction settlements and similar conventions. Such assignments are intended to establish which party or entity involved in a specific unit of work is recognized as "expert" for the indicated construction processes or operations. Nevertheless, the final responsibility for fulfillment of the entire set of contract requirements remains with the CONTRACTOR.

C. Codes and Safety Standards: Without limiting the generality of other requirements of the Specifications, all work specified herein shall conform to or exceed the applicable requirements of the following Codes and Safety Standards.

1. Applicable Codes:

- City of Los Angeles Building Code
- City of Los Angeles Mechanical Code
- City of Los Angeles Plumbing Code
- City of Los Angeles Fire Code
- City of Los Angeles Electrical Code

References herein to "Building Code" shall mean City of Los Angeles Building Code. Similarly references to "Mechanical Code," "Plumbing Code," "Fire Code," and "Electric Code" shall mean City of Los Angeles Mechanical Code, City of Los Angeles Plumbing Code, City of Los Angeles Fire Code, and City of Los Angeles Electric Code respectively.

2. Applicable Safety Standards:

- OSHA Regulations for Construction
- OSHA Standard
- Cal-OSHA

References herein to "OSHA Regulations for Construction" shall mean Title 29, Part 1926, Construction Safety and Health Regulations, Code of Federal Regulations (OSHA), including all changes and amendments thereto.

References herein to "OSHA Standards" shall mean Title 29, Part 1910, Occupational Safety and Health Standards, Code of Federal Regulations (OSHA), including all changes and amendments thereto.

References herein to "Cal-OSHA" shall mean State of California, Department of Industrial Relations, as amended to date, and all changes and amendments there to which are effective as of the date of construction.

The latest edition of the codes as approved and adopted for use by the CITY as of the date of award shall apply to the Work herein, including all addenda, modifications, amendments, or other lawful changes thereto.

D. Standard Specifications: References in the Contract Documents to "Standard Specifications" shall mean the Standard Specifications for Public Works Construction, including all current supplements, addenda, and revisions thereof.

E. Standard Plans: References herein to "Standard Plans" shall mean the Standard Plans issued by the City of Los Angeles which drawings are hereby incorporated in and made a part of these Contract Documents, and copies of which are available for a fee.

F. Conflict between Codes, Safety Standards, Reference Standards, Drawings and other Contract Documents: In case of conflict between codes, reference standards, drawings and other Contract Documents, the most stringent requirements shall govern. All conflicts shall be brought to the attention of the ENGINEER for clarification and directions prior to ordering or providing any materials or labor. The CONTRACTOR shall bid for the most stringent requirements.

END OF SECTION

SECTION 01112
DESCRIPTION OF WORK

PART 1 - GENERAL

1.1 SUMMARY

A. As part of the City of Los Angeles (LA) Safe, Clean Water Program (SCWP), the MacArthur Lake Stormwater Capture Project will divert stormwater and dry weather flows from a storm drain line as it crosses Lake Street, treat diverted water using hydrodynamic separation and cartridge filtration, and use treated water to fill MacArthur Lake, thereby offsetting potable lake fill supply. The project adds a planted water feature that recirculates lake water and a bridge over the water feature outlet to the lake. The water feature and bridge enhance MacArthur Park's recreational and aesthetic value. New educational signage located near a new children's park added in 2022 will help explain the project elements and their benefits/purpose.

B. The work to be done under this Contract includes the furnishing of project management, labor, materials, tools, and equipment for the construction of the MacArthur Lake Stormwater Capture Project for the City of Los Angeles, all in accordance with the Contract Documents, including the GENERAL CONDITIONS, DIVISION 1 - GENERAL REQUIREMENTS and other Sections of the Project Manual.

1.2 GENERAL SCOPE OF WORK

A. Work In This Contract: Work in this Contract includes all labor, materials and equipment necessary for construction of MacArthur Lake Stormwater Capture Project as noted on the Contract Drawings and all other Contract Documents including the GENERAL CONDITIONS and GENERAL REQUIREMENTS. Project items to be installed include:

1. A storm drain diversion structure on S Lake Street to divert flows from an existing 45" RCP storm drain.
2. A Pretreatment Unit in S Lake Street.
3. A Wet Well Pump Station and Valve and Meter Vault on S Lake Street.
4. 18-inch pressure pipeline to convey stormwater from S Lake Street north and then west under the sidewalk along 7th Street, and into MacArthur Park.
5. A pressure-to-gravity transition manhole inside MacArthur Park.
6. Two vendor-provided secondary treatment units for stormwater treatment / filtration.
7. A 24-inch gravity pipeline and valves to convey treated storm water to MacArthur Lake.
8. A 24-inch gravity pipeline and manholes to convey treated storm water back to the existing storm drain system in S Grand View Street when MacArthur Lake is full and cannot accept flow.
9. A cascading water feature with wetland plantings.
10. A new vendor-provided truss bridge to provide pedestrian access across the water feature, continuing the MacArthur Lake perimeter path.
11. A new 6-inch DIP pipe connecting to an existing 6-inch DIP Irrigation Main in MacArthur Park that will convey water from the Lake to the new water feature (as part of a new lake water recirculation system).

B. Work Not In This Contract: "Work not in this Contract," "Work by others" and "Work by others but arranged and paid for by CONTRACTOR" are listed as follows:

1. All work or equipment indicated on the Contract Drawings as "Not in Contract" or "N.I.C." or anything which implied exclusion from the Contract in any manner.
2. All work or equipment indicated on the Contract Drawings or in this project as "work by others," and "work by others, but arranged and paid for by CONTRACTOR." The CONTRACTOR shall provide all necessary coordination, arrangement, and scheduling in accordance with General Conditions and other Sections of this Project Manual. CONTRACTOR shall appropriately pay for all charges, fees and costs specified to be paid for by the CONTRACTOR.
3. Department of Water and Power shall furnish and install electric service conductors from street utility line to new transformers or switchboards, and electric meters; furnish and install current transformers for switchboards (to be installed by CONTRACTOR) and service connections to current transformers and meters in accordance with Division 16. CONTRACTOR shall make all necessary arrangement and pay for all fees and charges.
4. Building Demolition. Site clearing and grading shall be provided by CONTRACTOR.

C. Working Schedule:
1. Working hours within the Public Right of Way (PROW) shall be between the hours of 9:00 AM and 3:30 PM.
    a. Any work conducted outside these hours will require obtaining a Rush Hour Exemption, Peak Hour Exemption, or Noise Variance which will be the responsibility of the CONTRACTOR and is subject to approval by Los Angeles Department of Transportation (LADOT), Council District, and BOE.
2. Working hours within the Park shall be between the hours of 8:30 AM and 6:00 PM.
3. Wet weather restriction: for storm drain pipes greater than or equal to 24" in diameter, work shall be restricted to April 15 to October 15.
4. No work within 10 days of a rain event, even outside of the wet weather season.

D. Related Work:

1. Documents affecting work of this Contract include, but are not limited to, the GENERAL CONDITIONS, DIVISION 1 - GENERAL REQUIREMENTS, and other Sections of the Project Manual.

E. Traffic Control:

1. Traffic control plans shall be developed and implemented by the CONTRACTOR. Full street closures along 7th Street will not be granted, and at least one lane of traffic in each direction shall remain open at all times during construction. Traffic control plans are subject to approval by LADOT, Council District, and BOE.
2. The CONTRACTOR should also expect to coordinate with LA METRO for impacts to any bus routes within the vicinity affected by the proposed traffic control plan.
3. It is also the CONTRACTOR's responsibility to check the CITY's TCTMC zones should traffic control plans need to be placed within a TCTMC zone.
4. In the event of needing to conduct work within a TCTMC zone, it will be the responsibility of the CONTRACTOR to obtain TCTMC approval for the proposed traffic control plan.

1.3 PROJECT IDENTIFICATION

A. General:

1. The Project Name is MacArthur Lake Stormwater Capture Project, (formerly MacArthur Lake Rehabilitation Project), located at 2230 West 6th Street, Los Angeles, CA 90057.
2. Contract Documents have been prepared by Carollo Engineers; 707 Wilshire Blvd. Suite 3920, Los Angeles, CA 90017.

B. The extent of Contracted Work is indicated on the Contract Drawings and in the following Sections of the Project Manual:

1. Division 1 - General Requirements.
2. Division 2 - Sitework.
3. Division 3 - Concrete.
4. Division 4 - Masonry - not used.
5. Division 5 - Metals.
6. Division 6 - Wood and Plastics.
7. Division 7 - Thermal and Moisture Protection.
8. Division 8 - Standard Steel Doors and Frames, etc. - not used.
9. Division 9 - Finishes.
10. Division 10 - Specialties - not used.
11. Division 11 - Equipment.
12. Division 12 - Furnishings - not used.
13. Division 13 - Special Construction.
14. Division 14 - Conveying Systems - not used.
15. Division 15 - Mechanical.
16. Division 16 - Electrical.
17. Division 17 - Instrumentation and Control.

C. In addition to provisions noted in Section 01112 - DESCRIPTION OF WORK in Division 1 GENERAL REQUIREMENTS, the drawing sheets are shown on Plan No. G102 are of the Contract Documents.

D. The CONTRACTOR shall obtain all permits necessary for performance of the Work, including, but not limited to, the list below:
1. Grading Permit from LA City Department of Building Safety (DBS).
2. Electrical Permit (DBS) - to be an express permit.
3. Plumbing Permit (DBS) - to be an express permit.
4. Demolition Permit (DBS).
5. Dewatering Permit (DBS) (if needed).
6. Traffic Control Plan approved by Los Angeles Department of Transportation (LADOT). There may also be possible coordination with LA Metro, Council Districts, and LADOT.
7. Stormwater Pollution Prevention Plan (SWPPP).
8. Erosion and Sediment Control Plan per LA County Public Works.
9. Wet Weather Erosion Control Plan (WWECP) per City of Los Angeles Public Works guidelines, required for work between Oct 1 and April 15.
10. Tree removal permit from Bureau of Street Services (if needed).
11. Access Plan for Temporary Fencing (subject to approval by RAP for park fencing).

12. Construction General Permit 99-08 DWQ from California Regional Water Quality Board (RWQCB) Los Angeles.
13. Encroachment Permit from City of LA Recreation and Parks (RAP).
14. Industrial Waste Permit (IWP) for Discharging wastewater to sanitary sewer from LASAN. Typically handled by the PM team, not contractor.
15. Shoring Permit.
16. Utility Crossing Notification to multiple agencies/utilities.
17. Environmental Compliance Plan.

E. Contractor shall take a phased approach to construction activities within the Park to minimize impacts to the Park and its users. Contractor shall submit a phasing plan for approval by the ENGINEER prior to start of work. See example Phasing Plan included in Attachment No. 1. Access to the Playground Area must remain for the entirety of this contract. At no point shall the playground area be closed to the public for the work in this contract unless approved by RAP.

F. Contractor should be prepared to coordinate with the Council District, BOE, and LASAN's Public Affairs Office (PAO) for the handling of unhoused individuals and related issues. See Specification 1280 for PAO contact information.
1. Contact LA - Homeless Services Authority at (213) 225-6581 to handle any homeless issues.

1.4 SUMMARY OF REFERENCES

A. Contracted Work can be summarized by references to the Contract General Conditions, Sections in the Project Manual, Contract Drawings, Addenda, Notice to Bidders and Modifications to the Contract Documents.

B. It is recognized that the Contracted Work may also be unavoidably affected or influenced by other governing codes and Regulations, natural phenomenon, including weather conditions and other forces outside the Contract Documents.

1.5 GROUNDBREAKING CEREMONY

The CONTRACTOR shall include in the contract cost and verify with the ENGINEER the ceremony schedule after the award of the contract. The CONTRACTOR shall prepare, after the award of the contract, all submittals for the construction sign and secure all necessary approvals. The CONTRACTOR shall provide necessary coordination for the Groundbreaking Ceremony, occurring before or during the construction at no additional cost to the CITY.

1.6 EQUIPMENT PROCUREMENT

A. General: The CONTRACTOR shall provide, supply, fabricate, construct, deliver (FOB site) and install for the City of Los Angeles (CITY), at the Project Site the equipment and systems in accordance with the Contract Documents.

B. Minimum Process Requirements: The equipment and systems supplied by the CONTRACTOR shall be capable of satisfying the process requirements as set forth in the Contract Documents.

C. General Compliance: All electrical equipment, control panels and cabinets, components, devices, etc. shall be in accordance with the provisions of APPROVAL OF ELECTRICAL EQUIPMENT of these GENERAL REQUIREMENTS.

1.7 COMPLETION OF CONSTRUCTION

A. CONSTRUCTION COMPLETION AND MAINTENANCE PERIOD:

1. Construction and six (6) Month Maintenance Period shall be completed in 931 calendar days once Notice to Proceed (NTP) is issued by the City. The following milestones shall be in place for the contract duration:
   a. Milestone No. 1: Substantial Construction Completion shall be completed once the following construction conditions have been met.
      (1) Substantial construction shall be completed within 751 calendar days milestone from NTP.
      (2) Where Substantial Construction Completion shall be defined as the completed construction of all items shown on the contract drawings.
      (3) A partial statement of completion (SOC) shall be issued for the completion of the items listed in 1.2 above as shown on Contract Drawings:
         (a) Civil (22 drawing sheets, CB101 to CU504).
         (b) Landscape (21 drawing sheets, LG001 to LP810).
         (c) Structural (5 drawing sheets, SG001 to SB502).
         (d) Mechanical (12 drawing sheets, MG001 to MP302).
         (e) Electrical (33 drawing sheets, EG001 to EP021).
         (f) Instrumentation (9 drawing sheets, IG001 to IP107).
      (4) Completion of the startup, testing, commissioning, and training requirements to the satisfaction of the ENGINEER.
      (5) Completion of the 90 calendar day plant establishment period as defined in Section 02930.
   b. Milestone No. 2: Six (6) Month Maintenance Period shall be completed once the following conditions have been met.
      (1) Completion of Milestone No. 1.
         (a) Milestone No. 2 may not begin until Milestone No. 1 has been achieved.
      (2) The Six (6) Month Maintenance Period shall be completed within 180 calendar days of completion of Milestone No. 1.
         (a) The Maintenance Period is further detailed in Section 02930 Landscape Maintenance.
2. Liquidated damages may be assessed at $8,500 per day.

1.8 SUPPLEMENTAL INFORMATION

The following supplemental information is provided for use by the CONTRACTOR:

A. Example Phasing Plan for reference (Attachment No. 1).
B. Soil Investigation: Ninyo & Moore Geotechnical Evaluation Report dated July 1, 2022 and Geotechnical Report Addendum dated July 29, 2022 (Attachment No. 2).
C. Summary of First Utility Notice Replies (Attachment No. 3).
D. Site Survey (Attachment No. 4).
E. As-Built Plans for Metro Red Line, including selected MacArthur Lake and Pump House Plans (Attachment No. 5).

END OF SECTION

THIS PAGE INTENTIONALLY LEFT BLANK

SECTION 01113
DIVISIONS OF TECHNICAL SECTIONS OF PROJECT MANUAL

1.1 THE REQUIREMENT

A. The Technical Section of the Project Manual, including the General Conditions and General Requirements, are arranged into the Construction Specifications Institute (C.S.I.) sixteen (16) Divisions - Section format with an additional Division 17 for Instrumentation and Controls. Each "Section" constitutes a unit of work and related "Sections" are grouped under broad generic headings called Divisions.

B. The organization of the Technical Sections of the Project Manual into Division, Sections, and articles shall not control or limit the CONTRACTOR in dividing the work among Subcontractors, a Sub-subcontractor, or to establish the extent of work to be performed by any trade. The CONTRACTOR shall be solely responsible for all subcontract arrangements of work regardless of the Project Manual organization.

END OF SECTION

THIS PAGE INTENTIONALLY LEFT BLANK

SECTION 01114
ISSUANCE OF DRAWINGS AND THE PROJECT MANUAL

1.1 THE REQUIREMENT

A. Unless otherwise provided in the Contract Documents, the ENGINEER will furnish to the CONTRACTOR one (1) set and one (1) CD containing each of the Drawings, Project Manual and, where applicable, Geotechnical Data Report (GDR) without charge. Additional sets desired by the CONTRACTOR or Subcontractors will be furnished upon request, but at the CONTRACTOR'S expense.

B. All Drawings, Specifications, Special Provisions, and copies thereof are the property of the CITY. They are not to be used on other work. All necessary bid documents will be available to prospective bidders via the City of Los Angeles Regional Alliance Marketplace for Procurement (www.rampla.org/s/).

END OF SECTION

THIS PAGE INTENTIONALLY LEFT BLANK

SECTION 01115
MANDATORY PROVISIONS

1.1 THE REQUIREMENT

A. Any mention in the Divisions of this Project Manual which follow the General Requirements or indication on drawings of articles, materials, operations, or methods requires that the CONTRACTOR provide each item mentioned or indicated, of quality or subject to qualifications noted; perform according to conditions stated, each operation the same prescribed; and provide therefore all necessary labor, equipment, and incidentals, even though such mention of articles, materials, operations, methods, quality, qualifications, or conditions is not expressed in complete sentences.

END OF SECTION

THIS PAGE INTENTIONALLY LEFT BLANK

SECTION 01116
ELECTRONIC DOCUMENT CONTROL

1.1 USE OF ELECTRONIC DOCUMENT CONTROL SYSTEM

A. The CONTRACTOR shall use the City's cloud-based electronic document control system to submit and receive all construction related documentation on this project. The system used is "e2020" and all costs associated with the use of the software have been paid for by the City. The website address to be used will be provided by the ENGINEER after award of the contract. The CITY will provide training to the CONTRACTOR on the use of the system. As coordinated with other sections of these project specifications, the information to be generated, transmitted, and tracked by the e2020 document control system shall include, but not be limited to the following:

1. Correspondence (including Engineer's Communication).
2. Plan Clarifications.
3. Requests for Information (RFI's).
4. Submittals & Shop Drawings.
5. Change Orders.
6. Allowance Orders.
7. Progress Photos.
8. Project Schedules.
9. Meeting Minutes.
10. Permits.
11. Partnering (Issue Resolution Ladder, Charter).
12, Claims Resolution.
13. Building Information Modeling Coordination.

B. When hard copies of drawings or product samples are required to be submitted that cannot be submitted through e2020, the CONTRACTOR shall:

1. Upload a transmittal sheet for the submittal in e2020,
2. Submit six (6) full-size hard copies,
3. Submit one half-sized hard copy (not exceeding 11x17 inches),
4. Transmit electronic files to the ENGINEER in Adobe Acrobat (.PDF) format.

C. The CONTRACTOR shall be responsible for the installation of its own computer system and scanner. In addition, the CONTRACTOR shall be responsible for the procurement of an Internet Service Provider (ISP) with a high-speed broadband internet connection for its own use, as well as the ENGINEER's/INSPECTOR's use at the site offices to access the document control system.

D. At the request of the ENGINEER, the CONTRACTOR must provide a hard copy of approved submittals to the INSPECTOR, at no additional cost to the CITY.

END OF SECTION

SECTION 01120
INTERFACE / COORDINATION REQUIREMENTS

1.1 THE REQUIREMENT

A. Traffic and Access

1. The Contractor's operations shall cause no unnecessary inconvenience. The access rights of the public shall be considered at all times. Unless otherwise authorized, traffic shall be permitted to pass through the Work, or an approved detour shall be provided.

2. Safe and adequate pedestrian and vehicular access shall be provided and maintained to: residences; fire hydrants; commercial and industrial establishments; churches, schools and parking lots; service stations and motels; hospitals; police and fire stations; and establishments of similar nature. Access to these facilities shall be continuous and unobstructed unless otherwise approved by the Engineer.

3. The Contractor shall provide and install steel plates to bridge any excavation in the public right-of-way. Such bridging shall be in accordance with the provisions of the latest edition of the Work Area Traffic Control Handbook (WATCH), and in addition, shall have a nonskid surface with coefficient of friction of 0.35 per California Test 342 for all steel plates within the traveled roadway of streets and alleys. When required by the INSPECTOR, the Contractor shall certify in writing to the INSPECTOR that steel plates to be used in the Work meet the required static coefficient of friction. Also, when required by the INSPECTOR, the Contractor shall have steel plates to be used in the Work tested in accordance with the above standards for the verification of required static coefficients of friction. Testing shall be done by an independent laboratory approved by the INSPECTOR. The Contractor shall pay for any costs associated with the testing of steel plates.

4. At least ten (10) days before the start of construction, the Contractor is required to notify, in writing, abutting property occupants of the proposed construction start date. A copy of said written notification shall be provided to the INSPECTOR.

5. The Contractor shall notify the MTA Special Events Desk at (213) 922-4632, (213) 922-4692 (Fax) at least forty-eight (48) hours before any work that will affect normal bus operations. If no answer, call MTA Dispatch at any time, (213)-922-4634.

6. Safe and adequate pedestrian zones and public transportation stops, as well as pedestrian crossings of the Work at intervals not exceeding 90m (300 feet), shall be maintained unless otherwise approved by the Engineer. If required by the construction, the Contractor may close only one crosswalk at a time at intersections having four crosswalks. If construction requires closure of two or more crosswalks at an intersection, the Contractor shall obtain LADOT approval before implementation of the closure. LADOT approval is required prior to closing of any crosswalk at intersections having fewer than four crosswalks.

7. Vehicular access to residential driveways shall be maintained to the property line except when necessary construction precludes such access for reasonable periods of time. If backfill has been completed to the extent that safe access may be provided, and the street is opened to local traffic, the Contractor shall immediately clear the street and driveways and provide the maintained access.

8. The Contractor shall cooperate with the various parties involved in the delivery of mail and the collection and removal of trash and garbage to maintain existing schedules for these services.

9. Grading operations, roadway excavation and fill construction shall be conducted by the Contractor in a manner to provide a reasonably satisfactory surface for traffic. When rough grading is completed, the roadbed surface shall be brought to a smooth, even condition satisfactory for traffic.

10. Work shall be performed in only one-half of the roadway at one time. One-half of the roadway shall be kept open and unobstructed until the opposite side is ready for use by traffic. The Contractor shall phase the removal operations so as to maintain the specified traffic lanes on the existing pavement until sufficient new pavement is constructed to accommodate the traffic requirements. If one-half of a street is only being improved, a smooth, even surface and a condition satisfactory for traffic shall be maintained on the other one-half.

11. Where no pavement exists in a roadway, and traffic is to be maintained through the Worksite, the Contractor shall conduct its operations in a manner to provide a smooth, even surface satisfactory for traffic, reasonably free of mud and dirt.

12. The Contractor shall include in its Bid all costs for the above requirements.

B. Street Closures, Detours, Barricades

1. The Contractor shall comply with all applicable State, County and CITY requirements for closure of streets. The Contractor shall provide barriers, guards, lights, signs, temporary bridges, flagpersons, and watchpersons. The Contractor shall be responsible for compliance with additional public safety requirements that may arise. The Contractor shall furnish and install signs and warning devices and promptly remove them upon completion of the Work.
2. The Contractor shall obtain and pay for all permits for closure of streets, alleys or sidewalks, as required by the Bureau of Street Services (800) 996-2489 and LADOT (213) 972-4990.

3. At least forty-eight (48) hours in advance of closing, partially closing, or reopening any street, alley, or other public thoroughfare, the Contractor shall notify the Police, Fire, Traffic, and Engineering Departments, and comply with their requirements. Deviations must first be approved in writing by the Engineer.

4. When specified on the Plans or permit, the Contractor shall install advance construction notice signs per Standard Plan S-791, not less than seven (7) days before the start of construction. The Contractor shall maintain the signs for the duration of construction, removing them only after completion of the work. All costs incurred in furnishing, installing, maintaining and removing the signs shall be included in the Contractor's Bid.

5. The Contractor shall secure approval, in advance, from authorities concerned with the use of temporary bridges proposed by the Contractor for public use. Temporary bridges shall be clearly posted as to load limit, with signs and posting conforming to current requirements covering "signs" as set forth in the California Manual of Uniform Traffic Control Devices (MUTCD). (The California MUTCD is available on the internet a https://dot.ca.gov/programs/safety-programs/camutcd. This manual shall also apply to street closures, barricades, detours, lights, and other safety devices that may be required.

6. The Contractor shall comply with the requirements of the latest adopted edition of the "Work Area Traffic Control Handbook", obtainable from Building News, Inc., 10801 National Blvd., Los Angeles, CA 90064, (800) 873-6397 or the LADOT Worksite Traffic Control Plan (S-488.0) available from LADOT, 100 S. Main Street, 9th Floor, Los Angeles, CA 90012.

7. A street with local traffic crossing a street in which Work is being performed may be closed to traffic, providing the adjacent cross streets are kept open. The Contractor shall notify the Police and Fire Departments whenever such a street is to be closed to traffic. A similar notification shall then be made at the time the street is again opened to traffic. If the closing is to be of short duration or different sections of the street are to be closed at different times, the notification to the Police and Fire Departments shall be on a day-by-day basis, giving information regarding the conditions expected to prevail on the next working day. The Contractor shall notify the INSPECTOR which streets are to be closed, duration of closures, and person(s) and telephone numbers contacted in the Fire and Police Department.

8. All signs, including offsite detour signs, lights, or devices installed by the Contractor shall conform to the California Manual of Uniform Traffic Control Devices (MUTCD), and be approved by LADOT before use. Offsite detour signs shall be installed, maintained, and removed by the Contractor. "No Parking" signs shall be posted and removed only by LADOT upon request from the Contractor. LADOT will charge and collect its actual cost for each temporary sign installed and for each sign replaced during the authorized period. To be enforceable, temporary "No Parking" signs shall be installed by LADOT twenty-four (24) hours before the time when needed. Their removal by LADOT shall take place as the Work progresses to restore parking spaces. See Section 01313 – WORK BY CITY OR OTHERS of the GENERAL REQUIREMENTS.

9. The Contractor shall include in its Bid all costs for the above requirements.

C. Work Performed Within an Operating Facility

1. The Contractor will be performing work connected to an operating park with existing irrigation and pump house. Under these conditions, precautions will be necessary to ensure that no damage occurs to this existing facility, including but not limited to piping, utilities, roads, and structures that are to remain in operation and including those to be modified or replaced.

2. The park with its existing irrigation and pump house must be kept in continuous operation throughout the construction period. No interruption will be permitted which adversely affects the service provided. The Contractor shall provide temporary facilities and make temporary modifications as necessary to keep the existing facilities in continuous operation during the construction period. Any

temporary facilities, materials, equipment and labor required to achieve this objective shall be included in the Contractor's Bid. At the completion of work, all such temporary facilities, materials, and equipment remaining shall be removed from the site.

3. As approved by the Engineer, all or portions of the existing facility may be taken out of service for short periods of time corresponding with expected instances of minimum impact. The Contractor shall notify the Engineer on forms (see Attachment 01120-A1 through 01120-A2) provided by the Engineer not less than thirty calendar (30) days in advance to determine the feasibility of taking a utility/operation out of service. If the Engineer determines that the utility/operation can be taken out of service, the Contractor shall then request the shutdown on standard forms provided by the Engineer. Such requests shall be submitted to the Engineer not less than fifteen (15) calendar days before the requested date of the shutdown and shall include: dates, times, locations, procedures, and drawings showing materials proposed to be used and work to be performed. If any of the information changes, an additional fifteen (15) calendar days may be required after such changes are reported to the Engineer. Approval when granted will always be conditional. If granted, approval of the request, including date and time, will be given three (3) calendar days before the proposed shutdown. Additionally, all preparations outlined in the submitted procedures shall be demonstrated to the Engineer and shall be completed twenty-four (24) hours before the shutdown. This shall include, but not be limited to, all tools, equipment, materials, excavations, operation of fans, pumps, etc. Should the Contractor fail to meet this requirement, the Engineer shall reserve the right to cancel such scheduled shutdown at no cost to the CITY and, furthermore, the Contractor shall reimburse the CITY for preparation costs incurred.
   It is anticipated that existing power will need to be shut off in order for the Project to tie into the existing electrical. The Contractor shall notify the Engineer as advised above and conduct the shutoff during a time when power use is expected to cause minimal impact to park operations.

4. Vehicular and pedestrian traffic adjacent to the laydown area and/or within the jobsite must be maintained. If an existing street in the Contractor's Work area is to be demolished or obstructed, the Contractor shall be responsible for providing access through or around the effected area, including signs, barricades, and lights, as approved by the Engineer and any local agencies having jurisdiction over any public access areas. The Contractor shall follow WATCH standards and the California Manual of Uniform Traffic Control Devices (MUTCD), for all traffic, including a minimum traffic lane of ten (10) feet for vehicles and four (4) feet for pedestrians. (The California MUTCD is available on the internet at http://www.dot.ca.gov/hq/traffops/signtech/mutcdsupp/ ca_mutcd.htm)).

5. The Contractor shall not park any vehicles (including concrete, hauling and delivery trucks) in any facility street at any time unless approved by the Engineer. Access must be maintained at all times for emergencies, sampling, equipment operations, maintenance, and like items.

6. Before altering any vehicular or pedestrian access, the Contractor shall notify the Engineer thirty (30) calendar days in advance on forms provided by the Engineer. The Contractor shall then request the alteration on forms provided by the Engineer. Requests shall include reasons for the alteration, times, boundary limits, special safety measures, proposed traffic rerouting with widths of such route, and a map detailing the above. Such requests shall be submitted to the

Engineer not less than fifteen (15) calendar days before the requested date of the access alteration. If any of the information changes, an additional fifteen (15) calendar days may be required after the changes are brought to the attention of the Engineer. Approval when granted will always be conditional. Final approval of the request, including date and time, will be given three (3) calendar days in advance. The CITY retains the right to ticket and impound vehicles blocking traffic.

7. At no time shall security of the site be compromised. If for any reason the Contractor finds it necessary to breach any existing perimeter fences or walls, permission of the Engineer shall first be obtained. The Contractor shall then request the alteration on forms provided by the Engineer. Requests shall include reasons for the alteration, times, boundary limits, special safety measures, proposed traffic rerouting with widths of such route, and a map detailing the above. The request shall also set forth details of repair of the wall or fences and shall establish a timetable for completion of the repairs. The repaired wall or fence shall be the same height as, and of comparable quality and appearance to the previously existing construction. Such requests shall be submitted to the Engineer not less than fifteen (15) calendar days before the requested date of the access alteration. If any of the information changes, an additional fifteen (15) calendar days may be required after the changes are brought to the attention of the Engineer. Approval when granted will always be conditional. Final approval of the request, including date and time, will be given three (3) calendar days in advance. The Contractor shall provide interim security over the duration of the breach.

8. The following shall be taken into consideration in preparing the proposed schedule of construction operation:
   a. Identify times when power outages may occur and the maximum number of hours in a single period that the power may be off. Identify if standby generators will be required during a period of power outage.

   b. Identify if temporary pedestrian access is required.

   c. Identify if utilities to be relocated must remain in operation.

   d. Identify if a time span is required between power or flow shutdowns to allow for system recovery.

   e. Identify if access to specific structures or systems that could become blocked during construction activities must be maintained during the construction period.

END OF SECTION

(SEE ATTACHMENTS)

ATTACHMENTS TO SECTION 01120

Attachments to General Requirements Section 01120 consists of two (2) documents, as follows:

ATTACHMENT NUMBER	TITLE OF ATTACHMENT	NUMBER OF PAGES IN THIS ATTACHMENT
01120-A1	Request for Special Plan Accommodations (RESPA)	1
01120-A2	Treatment Plant Special Plan Accommodations (SPA)	1

REQUEST FOR SPECIAL PLAN ACCOMMODATIONS (RESPA)

REQUEST #:_____

REQUESTOR:_____ PHONE#: (____) _____

SUBCONTRACTOR:_____ PHONE#: (____) _____

PROJECT:_____ ELEMENT:_____

REASON FOR REQUEST:_____

_____

_____

POTENTIAL FOR SPILL: ☐ YES ☐ NO **(If Yes, Attach Spill Prevention Plan)**
MATERIAL:_____
(Spill Prevention Plan should include type of material, containment procedures, discharged location and procedures, estimate of material to be handled, etc.)

STREET/LOCATION OF WORK:_____
(Street name, building, tunnel, MCC, etc.)

AFFECTED AREA:_____

PROCESS:_____

ELECTRICAL ACCESS:_____

OTHER:_____

(Attach drawing, sketch, map or plan detail showing work to be performed or affected area, etc.)

WORK TO BE PERFORMED:_____

_____

_____

ADDITIONAL INFORMATION: (Detour plan, confined space procedures, barricades, flagperson, etc.)

_____

_____

_____

DAY/START TIME:_____ DURATION:_____

DAY/FINISH TIME:_____

REQUESTOR SIGNATURE:_____ DATE:_____

PROJECT MANAGER SIGNATURE:_____ DATE:_____

TREATMENT PLANT
SPECIAL PLAN ACCOMMODATIONS (SPA)

DATE:_____ SPA #:_____

PROJECT:_____

SOPER REQUIRED:_____

START:_____ FINISH:_____ DURATION:_____

CLEARANCE REQUIRED:___ WORK PERMIT REQUIRED:___ ACCESS ALTERATION:___

POTENTIAL FOR SPILL: ☐ YES ☐ NO **(If Yes, Attach Spill Prevention Plan)**
MATERIAL:_____
PROJECT ENGINEER: _____ PHONE: _____

CONTRACTOR: _____ PHONE: _____

REASON FOR REQUEST: _____

_____

IMPACT: _____

_____

WORK TO BE PERFORMED BY Contractor: _____

_____

BY PLANT OPERATIONS: _____

_____

OPERATIONS: _____
SHIFT SUPERINTENDENT DATE

_____
LIAISON SHIFT SUPERINTENDENT DATE

MAINTENANCE: _____
TECHNICAL REVIEW DATE

ENGINEERING: _____
PROJECT Engineer DATE

OTHER: _____
ELECTRICIAN. PROC MAINT. MGR. DATE

cc: Plant Manager, Shift Superintendent, Liaison S.S., P.E., Plant Engr, Contractor, Con-Ad Inspec., Plant Security, Maint. Related, Liaison File/Engr.

SECTION 01140
CONTRACTOR'S USE OF THE PREMISES

1.1 THE REQUIREMENT

A. General

1. This Section applies to all situations in which the CONTRACTOR or his representatives, including but not necessarily limited to, suppliers, Subcontractors, employees, and field engineers, who enter upon the CITY'S property.

2. CONTRACTOR shall commence the Contract Work and provide security and protection to existing facility and job site within 5 days from the issuance of Notice-To-Proceed letter, unless noted otherwise.

B. Access to the Job-site

1. As instructed by the ENGINEER, the CONTRACTOR shall restrict CONTRACTOR'S employees to the immediate Work areas on the job-site and in no way go beyond the Work limits noted on the Contract Drawings or as otherwise directed by the ENGINEER.

2. CONTRACTOR shall in no way block such entrance(s) to the job-site when Contracted Work occurs at an existing CITY facility. At any time, the CONTRACTOR shall not block any other entrance/exit/fire doors, corridor or lobby door, etc. All fire and smoke doors, including the elevator/lobby doors, shall remain in operation at all times. CONTRACTOR shall provide all required exit at all times.

3. Use of such accesses to the job-site will only be for the purpose of parking, delivery and/or removal of materials equipment, tools, vehicles and removal of rubbish and debris, and shall be kept free of obstructions and in a safe condition at all times during extent of Contracted Work.

4. Use existing stairs to transport materials, equipment, supplies and CONTRACTOR'S personnel to the Work areas. Use of such stairs shall be kept clear of materials, equipment, tools and debris and shall not create any hazardous conditions or interfere with use of such stairs by CITY Employees and the Public. Use of stairs to transport materials, equipment or supplies by the CONTRACTOR'S personnel shall be in conformance with the California State OSHA requirements.

5. Use of crane, equipment and/or man lift, catwalk/platform to transport materials, equipment, supplies and the CONTRACTOR'S personnel to the Work area shall be in conformance with the requirements of the local governing agencies. The CONTRACTOR shall furnish the CITY with a duplicate copy of the operating permit of the equipment prior to its use.

6. If any of the crane, equipment and/or man lift, catwalk platform is attached to the existing structure specified to remain, CONTRACTOR shall provide shop drawings, including the equipment data, the attachment details, structural calculation and erection plans to the ENGINEER for approval.

7. The ENGINEER may furnish the CONTRACTOR keys to the existing rooms in the building. If the key is not available, the CONTRACTOR shall gain access to the room without damaging the room and door. The CONTRACTOR shall return all temporary and existing keys to the ENGINEER after the completion of the Contract.

8. For existing electrical transformer room or vault room, which are maintained by the Department of Water and Power, the CONTRACTOR shall arrange and obtain the permission for access and to do work from the Department of Water and Power.

9. The CONTRACTOR shall not change any existing occupied room or door key without the approval of the ENGINEER. The CONTRACTOR shall provide a duplicate key to the ENGINEER for CITY employee access.

C. City Occupation of the Premises

The CITY will occupy the existing premises (structures) during construction operations, and as indicated in the GENERAL REQUIREMENTS Section 01313 – WORK BY CITY OR OTHERS, and in Section 00406 – PARTIAL ACCEPTANCE of the GENERAL CONDITIONS.

D. Contractor's Use of the Premises

1. Do not interfere with Park operations of the MacArthur Lake Park during Contracted Work operations, as directed by the ENGINEER.

2. Exercise care during Contracted Work operations not to interfere with or damage the following listed facilities:

   a. Existing Pump House and Lake Fountain Pump and Controls

   b. Existing Lake Fill System

   c. Existing Park Play Area

3. The CONTRACTOR shall carefully remove, salvage and protect the following listed items, as directed by the ENGINEER or the Consultant. The CONTRACTOR shall submit removal plans for review prior to start of work, which shall include, but not limited to, plans for delivering salvaged equipment and materials to a location determined by the OWNER:

   a. Existing 20 HP Vertical Turbine Pump

   b. Existing Blower Compressors, Controls, and wiring

   c. Existing Blower Discharge Piping and Appurtenances

4. All items, materials and equipment remaining in the existing structures and on the premises (job site), which are not specified to be salvaged in Item C above or elsewhere, shall become the property of the CONTRACTOR and shall be removed from the job site. The CITY makes no claims or assumes any value in any of these items, materials and/or equipment if they are removed from the

structures or the job site or vandalized prior to and/or during the Contract period. The CITY assumes no responsibility for any additional operation or works as a result of the conditions described herein.

E. Parking

1. No parking of CONTRACTOR'S vehicles will be allowed on the job-site except for the purposes of unloading and/or loading as directed by the ENGINEER. CONTRACTOR shall not use new paved areas for loading or unloading. All traffic controls in the Work area shall conform to the Work area Traffic Control Handbook (WATCH), latest edition, and the California Manual of Uniform Traffic Control Devices (MUTCD). (The California MUTCD is available on the internet at https://dot.ca.gov/programs/safety-programs/camutcd).

2. CONTRACTOR'S employees are advised to park on adjacent CITY streets and shall observe CITY parking restrictions posted on such streets.

3. CONTRACTOR shall obtain and pay for a "Street Use Permit" in order to park his vehicles, equipment and CONTRACTOR'S Field Office at Street Division, Bureau of Street Services, 1149 S. Broadway, Suite 400, (800) 996-2489. Such "Street Use" shall be fenced off from street traffic as required. Upon completion of Contracted Work, such street area shall be left in a clean and safe condition ready for use by the public. Wherever CONTRACTOR and CONTRACTOR'S employees' vehicles are located on the street or "Street Use" area or on the job-site, all such vehicles shall be kept locked at all times.

F. Security

1. Restrict the access of all persons entering upon the CITY'S property in connection with the Contracted Work to the Access Route and to the actual site of the work.

2. All employees of the CONTRACTOR who will be engaged in the construction of this project will be screened by the CITY for proper identification and good behavior. Candidates of good standing will be issued a temporary pass. CONTRACTOR shall furnish the CITY, a list of employees for approval prior to start of this project.

3. In addition to the responsibilities specified in other Sections of these GENERAL REQUIREMENTS, and the GENERAL CONDITIONS, the CONTRACTOR shall be responsible for the security of all its construction equipment, materials, tools, facilities, and vehicles (personal, private, or contractual) while performing the work of this Contract and any aforementioned item that is stolen shall be the responsibility of the CONTRACTOR at no additional cost to the CITY. This requirement shall be effective twenty-four (24) hours per day for the duration of the Contract.

4. CONTRACTOR shall furnish and maintain approved type site security protection between the Work areas and other areas. All such site security protection shall remain for the duration of this Contract.

5. The CITY is responsible for the security of the parking lot or parking area. The CITY is not responsible for any lost content or item stored in the parking lot or any damage to material or equipment stored therein.

6. CONTRACTOR shall furnish and maintain adequate site security protection, as directed by the ENGINEER, INSPECTOR or other authorities having jurisdiction, at no additional cost to the CITY.

G. Protections

1. Required: Where necessary for the safety of the public and the protection of the adjacent street improvements and adjacent properties, provide and maintain adequate protection, fences and gates and barricades to separate Work areas from areas outside the job-site limits**.** Such protections shall comply with provisions of Section 01120 – INTERFACE/COORDINATION REQUIREMENTS and Section 01721 – MOBILIZATION of the GENERAL REQUIREMENTS, and shall remain in place during extent of this Contract or as otherwise directed by the INSPECTOR.

2. CONTRACTOR shall provide protections, barricades, signs, etc., as necessary so that persons will be protected from the Work areas where trenching and excavations occur for foundation, underground utilities, underground fuel storage tanks etc. on the job-site. Upon completion of such work operations, such protections shall be removed. Such protections shall not disrupt the normal park activities at the job-site.

3. All equipment, material, soil, debris and any heavy loaded object shall not be stockpiled in adjacent area to create any surcharging to the trench or excavation.

4. Protection of Existing Building and Site Conditions:

   a. Construct and maintain a suitable type partition, approved by the ENGINEER, to prevent dust, noise and any other nuisance to occupants within areas adjacent to the Work area(s) of this Project.

   b. Protect existing surfaces in areas where work of this Contract is being performed or passed through for access to the Work areas from damage in a manner approved by the ENGINEER. Take all necessary precautions to protect and preserve the integrity of all existing work. Any damage will be subject to requirements hereinafter specified. Submit protection plans or details as required by the ENGINEER.

   c. To avoid excessive dust during Contracted Work in the building, furnish and use suitable vacuum cleaning equipment when and as often as conditions so necessitate.

   d. Provide adequate protection for existing wall, fencing, post or sign, lighting, plant, traffic signal equipment including loop detectors, paving, etc. indicated to remain within the Work area. CONTRACTOR shall make necessary repair to damages occurred under CONTRACTOR'S responsibility or jurisdiction.

   e. Check with Weather Bureau and provide temporary roof protection against rain or moisture from the existing leaks or during the Work on

existing roofing. CONTRACTOR shall be liable for all damage to interior and exterior of the building.

f. Protect all power, air and ventilation, fire and security alarm system, communication equipment in CITY occupied area for the duration of the Contract. CONTRACTOR shall coordinate and arrange all new work in the CITY occupied area, in accordance with Contract requirements.

5. Temporary Partitions: Provide, maintain and remove full height temporary wood stud and plywood partitions complete with necessary doors where noted on the Contract Drawing and as directed by the ENGINEER as necessary to separate the Work areas from existing CITY occupied areas during extent of the Contract. All such partitions shall meet requirements of the Los Angeles City Building Code and the latest Amendments. Do not attach partitions to existing ceiling structure and exercise care not to damage existing floor coverings.

H. Repair of Damages:

1. Required: Repair or replace any damage to existing Park Pump House and equipment located inside or outside the building under CONTRACTOR'S protection.

2. Methods: Repair or replace damaged work with new materials as necessary to restore the damaged areas or surfaces to a condition equal to and matching such conditions existing prior to damage or start of Work of this Contract, to the full satisfaction of the ENGINEER, and at no added cost to the CITY. Submit repair method for approval as required by the ENGINEER.

3. Matching or Existing Work:

a. Finish of all existing wood, plaster, masonry and/or concrete work indicated on the Drawings to be altered, repaired or patched to match and be flush with adjoining surfaces, subject to the approval of the ENGINEER.

b. Finish of all new masonry and/or concrete work (to adjoin remaining work) to match and be flush with adjoining surfaces, unless otherwise noted on the Drawings, subject to the approval of the ENGINEER.

I. Interruption of Services

1. CONTRACTOR shall make all provisions to accomplish Contracted Work without undue interference with the CITY operations of the existing facilities on the job-site premises. Any necessary interruptions to existing elevator, plumbing, mechanical and/or electrical facilities shall be done only after 48 hours advance consultation with the ENGINEER and at such time and duration as instructed by the ENGINEER. Provide an uninterruptive power source if necessary to ensure that there is no power interruption. CONTRACTOR shall verify existing loading and any possible load increase during construction prior to ordering. Any required new circuit or repair of existing circuit in the CITY'S occupied area to maintain continuous operation shall be done by CONTRACTOR at no additional cost to the CITY.

J. Non-interference With Others

1. CONTRACTOR shall confine Contracted Work operations to the immediate boundaries of the job-site and shall execute work operations in a manner to minimize interference with CITY operations and/or work operations of other CONTRACTORS working on the premises; as directed by the ENGINEER.

2. CONTRACTOR shall provide and maintain adjacent pedestrian and vehicular accesses in accordance with Work area Traffic Control Handbook (W.A.T.C.H.), latest edition, and the California Manual of Uniform Traffic Control Devices (MUTCD).

3. CONTRACTOR shall obtain approval of ENGINEER and local authorities having jurisdiction such as Department of Transportation, Police Department, Bureau of Street Services, etc. prior to any street, alley or sidewalk closure.

K. Underground Service Alert

1. Before commencing any excavation, the CONTRACTOR shall obtain an underground service alert inquiry I.D. Number by calling 1 (800) 422-4133. Two (2) working days shall be allowed after the I.D. Number is obtained and before the excavation work starts so that utility owners can be notified. The I.D. Number must be reported to the Bureau of Contract Administration when calling for inspection. I.D. Numbers will not be given more than ten (10) calendar days prior to starting excavation work.

L. Job Safety

1. CONTRACTOR shall observe all safety rules and regulations of the Los Angeles City Building Code and CAL/OSHA as applicable to the safety of the CONTRACTOR, CONTRACTOR'S personnel and CITY employees during Contracted Work operations and especially during asbestos removal operations.

END OF SECTION

SECTION 01150
STORAGE OF MATERIALS AND EQUIPMENT

1.1 THE REQUIREMENT

A. All materials and equipment shall be stored and protected in accordance with the manufacturer's instructions, with seals and labels intact and legible. Store sensitive products in weatherproof, climate-controlled enclosures. Where indoor storage is required, the equipment shall be stored inside a completely enclosed building, with the temperature controlled between 60 degrees Fahrenheit and 100 degrees Fahrenheit (60°F – 100°F) and a maximum relative humidity of ninety percent (90%) noncondensing.

B. For exterior storage of material or equipment, the materials or equipment shall be placed on sloped supports above ground. Material or equipment subject to deterioration shall be covered with an impervious covering. Where necessary ventilation and heating shall be provided to avoid condensation.

C. The CONTRACTOR shall exercise all measures necessary to ensure preservation of the quality, quantity, and fitness of the materials or equipment and shall perform the manufacturers recommended maintenance of the material or equipment.

D. The CONTRACTOR shall inspect the material and equipment, and submit a written monthly report to the INSPECTOR listing all the equipment stored, the results of their inspection, and the maintenance performed.

E. The materials and equipment shall not show signs of pitting, rust, decay or other deleterious effects of storage when incorporated in to the work.

F. Pumps, motors, electrical equipment, and other equipment with anti-friction or sleeve bearings shall be stored in weather tight structures maintained at a temperature above sixty degrees Fahrenheit (60°F). Electrical equipment, controls, and insulation shall be protected against moisture and water damage. All space heaters furnished in electrical equipment shall be immediately energized and operated continuously until the equipment is placed into service.

G. The CONTRACTOR shall grant the INSPECTOR and ENGINEER access to the storage facility at any time and assist the INSPECTOR and ENGINEER in conducting a full view, piece by piece, inventory of all such material or equipment.

H. The CONTRACTOR shall absorb any and all cost incurred to store, protect, and maintain the materials and equipment without modification to the Contract amount.

I. For CITY furnished equipment delivered to the site, the CONTRACTOR shall take all necessary measures to protect the equipment from damage due to the CONTRACTOR's activities. The CONTRACTOR shall also ensure that all measures required by the CITY's vendor to preserve and protect their equipment are maintained and are not disturbed including, but not limited to, providing for the continuous operation of space heaters furnished in electrical equipment.

END OF SECTION

THIS PAGE INTENTIONALLY LEFT BLANK

SECTION 01212
FIXED CASH ALLOWANCE ITEMS

1.1 THE REQUIREMENT

A. A fixed cash allowance has been allocated to each of the following items of the Bid Breakdown (see Bid Proposal). Requirements for each Fixed Cash Allowance Item are specified in the GENERAL REQUIREMENTS (GR) section referenced below. Overhead and Profit, at the rates listed below, shall be added to the actual invoiced amount.

See Section 01280.

Bid Item No.	Description	Overhead and Profit
2.	**Allowance for Differing Site Condition per the General Requirements, Section 01253**	**5%**
3.	**Allowance for Payments for Permits per the General Requirements, Section 01721**	**0%**
4.	**Allowance for Community Impacts Mitigation per the General Requirements, Section 01254**	**5%**
5.	**Allowance for Removal and Haul Away of Contaminated Soil, Lakebed Material, and Railroad Ties (if found)**	**5%**
6.	**Allowance for Opportunity to Partner per the General Requirements, Section 01353**	**0%**
7.	**Allowance for CEQA Mitigation Measures including biological, paleontological, archeological, noise, and vibration monitoring per the General Requirements, Sections 01280 and 01562 (MMP)**	**5%**
8.	**Allowance for Permanent Water Feature Fencing**	**5%**
9.	**Allowance for Utility Relocation and/or Support**	**0%**

B. If these items are not executed, or are only partially executed, or the allowance for any item is not expended or partially expended, then a deductive Change Order shall be issued for the amount that is not expended. If, however, these items are over expended (with ENGINEER'S prior approval), then an appropriate Change Order shall be executed in accordance with the provisions of the GENERAL REQUIREMENTS Section 01254 – CHANGE ORDERS, except for Overhead and Profit wherein the above listed rates shall apply.

C. The ENGINEER'S AND INSPECTOR'S field office supply allowance is to be used at the ENGINEER'S and/or INSPECTOR'S discretion to purchase office supplies and/or office equipment, perform repairs to field offices or equipment owned or leased by the City, pay field office utility bills, purchase reference documents, etc. The items covered by this allowance are in addition to those required to be furnished by the CONTRACTOR under GR Section 01721-Mobilization. The CONTRACTOR shall be reimbursed the actual invoice amount plus the markup allowed by Section A, above.

END OF SECTION

THIS PAGE INTENTIONALLY LEFT BLANK

SECTION 01251
CHANGE ORDER REQUESTS

1.1 THE REQUIREMENT

A. All quotations for preliminary change orders for extras, changes, additions, or deletions to the Work as described in CHANGES AND EXTRA WORK of the GENERAL CONDITIONS shall be submitted to the ENGINEER, in writing, on the Change Order Cost Quotation Form provided by the ENGINEER, and in conformance with the requirements of CHANGE ORDERS of the GENERAL REQUIREMENTS (See Attachment 01251-A1). The quotation shall be firm for a period of not less than sixty (60) calendar days from the date of receipt of the quotation by the ENGINEER. The CONTRACTOR shall submit its written cost quotation and Time Impact Analysis not later than fifteen (15) days after being requested to provide such quotation unless the ENGINEER allows more time. Delays in submitting quotations beyond the fifteen (15) days set forth herein, which cause a delay in the issuance of a Change Order or a delay to the completion date of the project, shall not be cause for a claim or a time extension under the Contract.

B. The ENGINEER'S request for quotation on a preliminary change shall not be considered authorization to proceed with the changed work prior to the issuance of a final Lump Sum or Time & Material Change Order, unless directed otherwise, in writing, by the ENGINEER, nor shall such request constitute justification for a delay to the existing Work or a time extension under the Contract.

END OF SECTION

(SEE ATTACHMENT)

ATTACHMENT TO SECTION 01251

Attachments to General Requirements Section 01251 consists of one (1) document, as follows:

ATTACHMENT NUMBER	TITLE OF ATTACHMENT	NUMBER OF PAGES IN THIS ATTACHMENT
01251-A1	Change Order Cost Summary Form	1

Change Order Cost Summary Form

		Direct Labor	Direct Materials	Direct Equipment		Totals
(1):	Lump Sum Work by Prime Contractor	$	$	$		
(2):	"T&M" Work by Prime Contractor	$	$	$		
(3):	Subtotal - Direct Work (Prime Contractor)	$	$	$		
(4):	All Lump Sum Work by subcontractors (any tier)	$	$	$		
(5):	All "T&M" Work by subcontractors (any tier)	$	$	$		
(6):	Subtotal - Direct Work (all subcontractors)	$	$	$		$
					Add each of the three columns across and enter to the right.	
(3)+(6)=(7):	Total - Direct Costs	$	$	$		$
(8):	Markup	(20% of direct labor) $	(15% of direct mat'l) $	(15% of direct equip) $		$
(9):	Prime Contractor Markup for subcontractors				5% of line (6) direct sub work	$
(10):	Bonds & Insurance				1% of line (7) all direct work	$
(11):	Additional amount (if any) permitted by Contract					$
(12):	**GRAND TOTAL**				Add sums of lines) (7), (8), (9), (10) and (11)	$

THIS PAGE INTENTIONALLY LEFT BLANK

SECTION 01253
DIFFERING SITE CONDITIONS

1.1 THE REQUIREMENT

A. During the course of construction, the CONTRACTOR may encounter existing utilities, structures, etc. that are not shown on the contract drawings or are not specified and which may interfere with or may impact construction activities. In the event of this occurrence, the ENGINEER may direct the CONTRACTOR to proceed with necessary exploratory or corrective work to alleviate the situation. The cost for such directed work shall be paid for under the bid item DIFFERING SITE CONDITIONS of the SCHEDULE OF WORK AND PRICES. Costs shall be calculated in accordance with Section 01254 CHANGE ORDERS, subsection TIME AND MATERIALS WORK, of the GENERAL REQUIREMENTS.

B. If the total cost of the Work directed under the DIFFERING SITE CONDITIONS clause is different from the amount set forth in the SCHEDULE OF WORK AND PRICES, the Contract Price shall be adjusted by a Change Order. The adjustment shall be the difference between the total actual cost and the amount included in the Bid, as either an additional amount due the CONTRACTOR or as a credit to the CITY, as appropriate.

C. The Geotechnical Baseline Report (GBR), included as Attachment No. 5 to these Specifications, presents the geotechnical basis for the effect of geologic and geotechnical conditions upon the construction. The GBR is to be considered as establishing the only geotechnical baseline for all anticipated subsurface and physical conditions for the purposes of the construction. If actual subsurface or latent conditions physical conditions differ materially from those indicated in the GBR, and are of such a nature as to cause an increase or decrease in the cost of performance of the Work, or a change in the construction methods required for performance of the Work, which results in an increase or decrease in the cost of the Work, the City shall make an adjustment in the Contract Price and Contract Completion Date and the Contract Documents shall be modified accordingly. It is understood by the parties hereto that the GBR is the only standard that is to be applied for determining CONTRACTOR'S rights to an adjustment of the Contract Price or Contract Completion Date by reason of unforeseen or unexpected subsurface or latent physical conditions. All other geotechnical data, reports, and other information provided to the CONTRACTOR are not included in or made a part of the Contract Documents, nor are such other data, reports or information warranted, impliedly or expressly, as to accuracy, completeness or use.

D. The CONTRACTOR shall notify the ENGINEER, in writing, within twenty-four (24) hours of any subsurface latent conditions or physical conditions encountered which CONTRACTOR believes, or should have suspected in the exercise of diligence and extreme care, to constitute Differing Site Conditions as described in this Section. Such written notice shall include a detailed statement of the following facts concerning such conditions: (i) their location; (ii) their nature and extent; (iii) the baseline conditions described the GBR that formed the basis of the CONTRACTOR'S expectations regarding the conditions that would be encountered. The ENGINEER shall promptly investigate the conditions. If the ENGINEER finds that conditions materially differ and will cause an increase or decrease in the CONTRACTOR'S cost or the time required to perform any part of the Work under this Contract, whether or not changed as a result of such conditions, the ENGINEER shall, after receipt of the CONTRACTOR'S written statement, make an equitable adjustment and modify the Contract in writing.

E. If the CONTRACTOR intends to assert a claim for an adjustment in the Contract Price or Contract Completion Date under this Article, it must, within twenty (20) calendar days after receipt of such determination as to whether a Differing Site Condition exists, submit a written statement setting forth a detailed cost breakdown in the form required by GENERAL REQUIREMENTS Section 01254 (CHANGE ORDERS) setting forth the basis of CONTRACTOR'S calculation of the costs saved or incurred, detailed information demonstrating the effects on the Contractor's schedule of performance in the same manner as required by the Contract Documents for obtaining approval of extensions of time, identification of the portions of the Escrow Bid Documents (including without limitation the GBR baseline statements referred to in the Escrow Bid Documents as required by Section 01351 (Escrow Bid Documents) of the General Requirements) that formed the basis of CONTRACTOR'S bid estimate to perform the Work affected by such conditions, and a complete and detailed explanation of the factual basis for the CONTRACTOR'S request.

F. Failure by CONTRACTOR to strictly comply with the notice requirements of this Section concerning the timing and content of any notice of Differing Site Conditions or of any request for equitable adjustment based on Differing Site Conditions or any failure to comply with the requirements of Section 01351 (Escrow Bid Documents) pertaining to clear identification of GBR baseline statements used in preparation of CONTRACTOR's bid shall be deemed waiver of any claim by the CONTRACTOR for increase in the Contract Price or extension of the Contract Completion Date by reason of such conditions.

G. CONTRACTOR'S rights to compensation for (i) delay, disruption, hindrance, interference, schedule compression, and the impact, ripple or cumulative effect thereof; or (ii) additional supervision, administration, excess, extended or extraordinary overhead, loss of productivity, or similar costs, expenses or damages incurred as a result of or related to any claim of Differing Site Conditions shall be limited to such sums as are allowable under TEMPORARY SUSPENSION OR DELAY OF WORK of the GENERAL CONDITIONS.

H. No claim by the CONTRACTOR for an adjustment hereunder shall be allowed if asserted after final payment under this Contract.

END OF SECTION

SECTION 01254
CHANGE ORDERS

1.1 The Requirement

Payment to the Contractor, or credit to the City, for any change, addition, deletion or extra to the Work, or settlement of any Claim, covered by any Change Order, shall be determined by the methods set forth herein. The Engineer may change the Plans and Specifications, character of the Work, or quantity of Work provided the total net dollar value of all such changes, taking into consideration both additive and deductive changes, does not exceed twenty-five percent (25%) of the original Contract Price. (The total net dollar value requires that additive and deductive changes offset each other, and only after the total net dollar value of the changes exceeds 25% of the original Contract Price, will a Supplemental Agreement be required). Should it become necessary to exceed this limitation, the change shall be by written Supplemental Agreement between the Contractor and the City, which shall be executed by a Change Order.

Unless otherwise stipulated, "Unit Prices" and "Stipulated Prices" include all costs necessary to furnish, install and complete the Work. The "Unit Prices" and "Stipulated Prices" include all direct costs for labor, equipment and materials, all insurance and bond costs, all field and office supervisors and assistants, all onsite project administration, security costs, the cost of small tools and consumables, incidental job burdens, and all general home office expenses and no separate allowance will be made therefor. Assistants to field and office supervisors include all clerical, stenographic, and general office help. Incidental job burdens include, but is not limited to, office equipment and supplies, temporary toilets, telephone, utilities, safety equipment, warning devices, personal protective equipment, and conformance to OSHA requirements. Project administration includes, but is not limited to, review and coordination, estimating, engineering, scheduling, and expediting relative to Change Orders, and updating and furnishing Record Drawings to incorporate changes, schedule update, supervision not applied solely to the Work of the Change Order, home office salaries and expenses, and City of Los Angeles Business Tax.

A. Unit Prices

Unit prices stipulated in the Schedule of Work and Prices (Bid) or itemized in the approved Schedule of Values shall be utilized, where they are applicable and determined reasonable by the Engineer. In the event that the Change Order results in a change in the Bid quantity of more than twenty-five percent (25%), either increase or decrease, then either the Engineer or the Contractor may request a review of the unit price to determine if a new unit price shall be mutually determined by negotiation. Any new unit price mutually determined under this Subsection shall only apply to the units in excess of one hundred twenty five percent (125%) of the Bid quantity for overruns. In case of underruns, the new mutually determined unit price shall only apply to the units up to seventy-five percent (75%) of the Bid quantity. When the final quantity is less than 75% of the Bid quantity, the total payment for that item shall not be more than 75% of the Bid quantity times the Bid unit price.

At the City's option, payment for Unit Price Work in excess of 125% of the Bid quantity, or less than 75% of the Bid quantity, will be made on a Time and Materials basis as provided in Subsection C if a new unit price cannot be agreed upon.

Renegotiated unit prices or unit prices for new items added to the Contract by Change Order shall be determined in accordance with Subsections B through G. Whether stipulated in the Bid, itemized in the approved Schedule of Values or renegotiated, the unit prices used for payment constitute the total adjustment with no further costs owed for

overhead, impact, profit, delay or impact to unchanged portions of the Contract, or any other reason. The unit price shall be full and final compensation as described in Subsection D.

The cost proposals for renegotiated unit prices shall be presented in accordance with the provisions of Subsections B through G. Should any Bid Item be deleted in its entirety, the amount bid for that Bid Item shall be subtracted from the total Contract amount. The Contractor shall be paid only for the actual cost incurred prior to the notification of such deletion for that Bid Item.

B. Lump Sum

The Engineer may initiate a change in the Work by issuing a Preliminary Change Order (PCO). A PCO will include a detailed description of the proposed additions, deletions, or revisions with supplementary sketches or revised Contract Drawings and/or Specifications and will request from the Contractor a lump sum cost quotation and time impact analysis for the proposed Change Order Work. The Contractor shall submit its PCO cost quotation and time impact analysis, if applicable, to the City within 14 calendar days after receipt of a PCO. The Contractor shall summarize the total cost and furnish a breakdown of the proposed lump sum costs satisfactory to the Engineer in accordance with Subsections B through G. Such lump sum costs shall be full and final compensation as described in Subsection D. The Contractor's quotation shall conform to the requirements of Section 01251 - Change Order Requests, and be submitted in the Change Order Cost Summary Form provided (see Attachment 01251-A1). The Change Order Cost Summary Form cannot be used to nullify or supersede any specification or contractual provision.

If the method or amount of payment cannot be agreed upon prior to performing the Change Order Work, the Engineer may issue a Unilateral Change Order in the amount determined reasonable by the Engineer for the Change Order Work and direct the Contractor to proceed immediately. The Engineer also has the option to issue a Time and Materials Change Order directing the Change Order Work be performed on a time and materials basis with the Contractor providing all labor, equipment, and materials necessary to complete the Change Order Work in a satisfactory manner and within a reasonable period of time. Estimates for lump sum quotations and accounting for Time and Materials Work shall be limited to direct expenditures necessitated specifically by the subject Change Order Work, and shall be segregated as follows:

1. Labor: The cost of labor shall include all employees of the Contractor or Subcontractor(s), up to and including working foremen, who are used in the actual and direct performance of the Change Order Work. Employees identified as superintendents or non-working foremen shall not be charged as labor on the Change Order Work. The labor rates used to price the Change Order Work shall be those listed on the Bureau of Engineering's website at http://eng.lacity.org/contractors/**.** The Change Order Labor Rates include State of California Prevailing Wages, Fringe Benefits (health & welfare, pension, vacation, training and other payments) as established by negotiated labor agreements, Payroll Taxes (FICA, Federal and State unemployment taxes) as established by law, and Insurance costs (Worker's Compensation and General Liability Insurance, but shall not include Automobile Liability Insurance, Umbrella or any other insurance costs). No other subcomponents of labor costs shall be considered, unless approved in writing by the Engineer.

The Change Order Labor Rates are calculated using the most current published prevailing wage and fringe benefits determination, applicable to the Los Angeles County and the particular labor classification, from the State of California Director of Industrial Relations. To the Total Base Hourly Wage Rate (Column D), will be added Payroll Taxes at 8.65% (Column E), and Worker's Compensation & General Liability Insurance at 13% (Column F) of the base wages (Columns A+B), respectively.

Copies of the prevailing wage and fringe benefit determinations are available on the internet at http://www.dir.ca.gov/OPRL/PWD/. Payment to a craft of classification not shown on the prevailing wage rate determinations shall comply with the rate of the craft or classification most closely related to it.

The Engineer may approve a higher markup for insurance by review of current invoice(s) of insurance premium, as prepared by insurance companies for the Contractor or its Subcontractors at all tiers, to be submitted by the Contractor within ten (10) working days after issuance of the Notice to Proceed.

Except when provided otherwise by specific labor agreements, the overtime compensation will be 1.5 times for more than 8 hours per day and Saturday work (Column H) and 2 times for Sunday and Holiday work (Column I).

The labor cost is not allowed to be increased by using labor classifications with paygrades higher than necessary to accomplish the Change Order Work. Owners, business partners, stock holders, corporate officers, next of kin, relatives and other stake holders of the contracting company (whose classifications are directly chargeable to the project) may be chargeable to the Change Order Work, provided that these personnel/workers perform direct labor in accordance with their classification and have the approval of the Inspector. The rates shall not exceed the prevailing wage rate for the classification they are performing. Foreman/General Foreman classification shall include a premium not exceeding the allowable premium in the Master Labor Agreement over the highest prevailing wage he is supervising. All labor classifications considered for the work shall be presented to the City, via a submittal, for review and approval before change order work is performed.

Reimbursement at the computed Change Order Labor Rates is subject to verification by certified payroll.

2. Materials: The cost of materials used in performing the Change Order Work will be the direct cost, including sales tax and freight, to the purchaser, whether Contractor, Subcontractor, or other forces, from the supplier thereof, except as follows:

   a. Cash or trade discounts available to the purchaser shall be credited to the City notwithstanding the fact that such discounts may not have been taken by the Contractor.

   b. For materials secured by other than a direct purchase and direct billing to the purchaser, the cost shall be deemed to be the price paid to the actual supplier as determined by the Engineer. Supplier markup, except for actual costs incurred in the handling of such materials, will not be allowed.

c. Payment for materials from sources owned wholly or in part by the purchaser shall not exceed the price paid by the purchaser for similar materials from said sources on contract items or the current wholesale price for such materials delivered to the Jobsite, whichever price is lower.

d. If, in the opinion of the Engineer, the cost of materials is excessive, or the Contractor does not furnish satisfactory evidence of the cost of such materials, then the cost shall be deemed to be the lowest current wholesale price for the quantity concerned, delivered to the Jobsite less cash or trade discount. The City reserves the right to furnish materials for the Work and no claim shall be made by the Contractor for costs and profit on such materials.

e. For the purposes of this Section, a "Supplier" is defined as any person or persons, firm or business, who supplies materials of construction and/or permanent equipment, but who does not perform any portion of the Work of the Contract on site, for the Contractor, except that labor or labor supervision which may be required by some manufacturers as part of their equipment installation for warranty or other purposes.

3. Equipment: The cost of equipment shall include ownership, lease or rental costs, as well as operating costs, for individual equipment units whose replacement value is in excess of $1,000. Transportation and set up costs shall be included, but only if the equipment is imported to the worksite solely to perform work on the Changed/Extra Work described in the Change Order and the Contractor can demonstrate that the changed work cannot or could not be performed economically with equipment already at the site. Equipment costs shall be determined in accordance with the requirements set forth in Subsection G.

4. Small tools, equipment, consumables, and incidental costs: No separate payment will be made for the use of small tools or equipment with a replacement value of $1,000 or less. This applies to tools and equipment owned by the Contractor or its Subcontractors, at any tier. Also, no separate payment will be made for fuel, lubricants, tool or equipment repairs, tool or equipment maintenance, consumables, drinking water, sanitary facilities or other incidentals. These costs are already included as a part of Markup.

5. Subcontractor Costs, including their overhead and profit, provided that such costs are direct costs to the Contractor for performing the Change Order Work as set forth in Subsections B through G.

C. Time and Materials Work

The costs of all Changed/Extra Work submitted under the Time and Materials (T&M) method shall be formulated in accordance with the provisions of Subsections B through I.

Unless otherwise stipulated on the Change Order, the "Not-to-Exceed" amount for all T&M Change Orders is $25,000. The Contractor is responsible for tracking costs and for notifying the Engineer in writing when costs approach 50% and 75% of the "Not-to-Exceed" amount. In addition, if the Changed/Extra Work cannot be completed within the "Not-to-Exceed" limit, the Contractor shall notify the Engineer in writing, and in a timely manner, that the limit requires an increase. The City will only reimburse eligible costs up to the "Not-to-Exceed" amount.

The Contractor shall notify the Inspector at the beginning of each day when T&M Change Order Work is being performed. The Contractor shall notify the Inspector of the T&M Change Order Work being performed and describe the personnel involved, whether by Contractor forces or by its Subcontractors, at any tier. Failure to notify the Inspector prior to the start of T&M Change Order Work serves as the Contractor's waiver to claim for compensation on that day.
For each day work is performed on the T&M Change Order, the Contractor shall submit a "Daily Report of Time and Material Work" to the Inspector. The "Daily Report" consists of Bureau of Contract Administration Form BCA-165 for labor supplied, and Form BCA-166 for equipment and materials supplied. The Inspector will only consider Forms that are properly completed as described below.

1. Separate forms must be used for labor and for equipment/materials.

2. Labor, equipment, material, or expenditures that are not included on Bureau of Contract Administration Forms BCA-165 and/or BCA-166 are ineligible for payment. There will be no exceptions to this requirement. It is the responsibility of the Contractor to include any and all items of labor, equipment, or material for which it requests compensation for each day's work completed.

3. Information required on the Labor form shall include name of personnel, personnel classification, and only the number of hours worked on T&M Change Order Work for the day being reported. Since the overhead allowance already includes all necessary supervision, any hours for additional supervision or non-working foremen are ineligible for additional payment. The premium pay for a general foreman is eligible for payment only if the general foreman is a working foreman and a general foreman was required by a Union Labor Agreement or otherwise approved by the Inspector. The general foreman rate is eligible for payment only during the time that a general foreman was required for the T&M Change Order Work.

4. Information required on the Equipment/Material form shall include Contractor-owned equipment and/or tools, and rented equipment or tools for which compensation is requested. Information shall include the type of equipment, size of equipment, equipment identification number, appurtenances, and only the number of hours worked on the T&M Change Order Work.

5. The only allowable materials are materials delivered to the job site and/or incorporated only into the T&M Change Order Work. The allowable materials shall be listed on the Equipment/Material form for the day that they are delivered to the job site and/or incorporated into the T&M Change Order Work.

6. Delivery ticket(s) and/or bill(s) of lading for rental equipment and/or tools delivered to the site and/or material incorporated into the T&M Change Order Work for the day being reported must be attached with the T&M sheet for that day. No payment will be allowed for materials and/or rented equipment unless receipt(s) or bill(s) of lading is attached. If the request for payment is not substantiated by original vendor/supplier invoices, acceptable copies of original invoices, or other documentation acceptable to the Inspector, the City may establish the cost of the item(s) at the lowest possible wholesale price or rental rate applicable while the T&M Change Order Work was being performed.

7. Failure to submit the required "Daily Report of Time and Material Work" by the close of the next working day shall waive all rights for that day unless otherwise

approved by the Inspector. Any T&M Change Order Work that cannot be substantiated by a "Daily Report", approved and signed by the Inspector, is ineligible for payment.

8. The Contractor is responsible for preparing the "Daily Report" for the T&M Change Order Work performed by its Subcontractors and submitting the forms to the Inspector on time.

9. The Contractor must have each "Daily Report" verified by the Inspector. After the "Daily Report" is approved by the Inspector, both the Contractor and Inspector sign the report. The original "Daily Report" is retained by the Inspector with a copy provided to the Contractor.

10. When the "Daily Report" is signed by the Inspector and the Contractor, it is binding on the Contractor and its Subcontractors.

11. When agreed to by the Inspector, the Contractor may submit a supplemental "Daily Report" for labor, materials, or equipment for which the Contractor requests compensation, but failed to list on the original daily report.

    a. These supplemental forms shall be marked "SUPPLEMENTAL".

    b. Unless otherwise approved by the Inspector, the supplemental forms may only be submitted for approval up to two (2) working days following the date when the work was performed.

No payment will be allowed for labor, materials, or equipment included on T&M sheets not signed by the Contractor and the Inspector. Payment will not be allowed for labor, materials, or equipment included on T&M sheets signed by anyone other than the Inspector or the Inspector's immediate supervisor.

D. General

It is the intent of the City to settle all Change Orders full and final at the time the Change Order is issued. Therefore, the following paragraph will be incorporated, in writing, on all Change Orders:

"The compensation (time and cost) set forth in a Change Order comprises the total compensation due the Contractor, all Subcontractors, and all Suppliers, for the Work or change defined in the Change Order, including impact on unchanged work. By signing the Change Order, the Contractor acknowledges and agrees on behalf of himself, all Subcontractors, and all Suppliers, that the stipulated compensation includes payment for all work contained in the Change Order, plus all payment for the interruption of schedules, extended field overhead costs, delay, and all impact, ripple effect or cumulative impact on all other work under this Contract. The signing of the Change Order indicates that the Change Order constitutes full mutual accord and satisfaction for the change, and that the time and/or cost under the Change Order constitutes the total equitable adjustment owed the Contractor, all Subcontractors, and all Suppliers as a result of the change. The Contractor, on behalf of himself, all subcontractors, and all Suppliers, agrees to waive all rights, without exception or reservation of any kind whatsoever, to file any further claim related to this Change Order. No further claim or request for equitable adjustment of any type for any reasonably

foreseeable cause shall arise out of or as a result of this Change Order or the impact of this Change Order on the remainder of the Work under this Contract."

Costs which shall not be paid in Change Orders under this Contract include, but are not limited to, interest costs of any type; claim preparation or filing costs; legal expenses; the costs of preparing or reviewing proposed Change Orders or Change Order proposals; lost revenue; lost profits; lost income or earnings; rescheduling costs; costs of idled equipment when such equipment is not at the site or has not yet been employed on the Work; lost earnings or interest on unpaid retainage; claims consulting costs; and the costs of corporate officer or staff visiting the site; any compensation due to the fluctuation of foreign currency conversion or exchange rates; loss of other business; changes in taxes or increased tax rates of any kind or any costs identified as unallowable under the provisions of the Federal Acquisition Regulations.

Extensions of time shall be based solely upon the effect of delays to the Work as a whole. Extensions of time shall not be granted for delays to the Work, unless the Contractor can clearly demonstrate, through analysis of the current updated schedule, that the delay to the Work as a whole arose or will arise from causes other than normal weather, beyond the control and without fault or negligence of the Contractor, or any Subcontractor, at any tier, and that such delays will, in fact, delay the progress of the Work as a whole. The Contractor shall not be entitled to a time extension unless it submits a Time Impact Analysis which is a calculation of the extent of the delay to the end date of the Work and which shows that the Work will be extended beyond the current Contract completion date. A Time Impact Analysis is a scheduling procedure which utilizes the networking techniques (fragnets) and a written analysis of the facts associated with the alleged delay to demonstrate the effect of the alleged delay on the critical path of the schedule. A "fragnet" is defined as a sequence of new activities and/or activity revisions that are proposed to be added to the existing current updated schedule to demonstrate (mathematically and graphically) the influence of the alleged delay on the end date of the Work and shall be the sole method for incorporating delays and impacts into the schedule. The objective of a Time Impact Analysis is to pinpoint, isolate, and quantify all time impact associated with a specific issue and determine its time relationship to current or future delays. Time extensions shall not be allowed for delays to parts of the Work that are not on the critical path of the currently approved monthly updated project schedule. Time extensions shall not be granted, nor delay damages of any kind whatsoever paid to the Contractor, until all available float, slack, or contingency time on the project is used and the end date of the Work is moved beyond the current, adjusted Contract completion date.

The cost summary, cost breakdowns and requests for cost reimbursement submitted by the Contractor (for delay, disruption, hindrance and interference associated with the changes, additions, deletions or extras) shall be itemized in a manner that, with mathematical certainty and without reliance upon probabilities or inferences, segregates the direct, actual reimbursable costs associated with each individual, change, addition, deletion, extra and (on an event-by-event basis) each individual delay or disruption event. Such cost summaries, breakdowns or requests shall not be based, in whole or in part, upon any methodology (such as "total cost" or "modified total cost" methodologies) that purports to calculate the Contractor's additional costs of performance of the extra, change, addition or deletion (including without limitation the additional costs of delay, disruption or other impact) based on the difference between Contractor's total actual Project or line item costs (with or without fee) and its original bid estimate for the Project or any original bid estimate line item. In connection with the foregoing, Contractor represents and warrants that it has the ability to generate and maintain complete and accurate cost accounting records that will reflect (i) the actual costs incurred or saved for each

individual item of Extra Work, change, addition, deletion (including without limitation any costs of associated delay, disruption, interference, hindrance and the cumulative impact of each extra, change, addition, deletion on other parts of the Work); and, (ii) on an event-by-event basis, the effect of each delay or disruption that forms the basis of each request for extension of time, regardless of their scope, number, complexity, cumulative effect, or time of issuance or occurrence.

Except as provided in "Temporary Suspension or Delay of Work" of the General Conditions, Contractor shall have no right to recovery of any compensation, costs, expenses or damages resulting from delay, disruption, interference, or hindrance in the performance of the Work (including without limitation interruption of schedules, excess or extraordinary extended field and indirect overhead costs, loss of productivity and the impact, ripple or cumulative effect on other Work).

Contractor waives any claim or rights and remedies based on abandonment, quantum merit, rescission or other similar legal theory by reason of any of the following circumstances, which the Contractor acknowledges and agrees are within the reasonable contemplation of the parties: (i) changes, additions, deletions and extras to the Work after execution of the Contract and issued from time to time throughout the period of construction, regardless of their scope, number, cumulative value, or complexity, to correct errors, omissions, conflicts, and ambiguities in the Contract Documents, or to implement discretionary changes to the scope of Work requested by the City; (ii) the issuance and performance of changes, additions, deletions and extras in a manner that is not in sequence with the as-built or as-planned progress of the Work; (iii) changes due to Differing Site Conditions; (iv) suspensions of the Work or parts thereof, or limitations on access to portions or all of the Work, for the convenience of City or in the interests of the Project; (v) delay or disruption to the Work due to failure of the City, Engineer or Inspector to timely perform any contractual obligation.

E. Markups - Overhead and Profit

1. In addition to the direct expenditures specified for labor, materials and equipment in Subsection B, a fixed markup percentage will be paid for all overhead and profit, including: All insurance costs other than specifically mentioned in this Section, all field and office supervisors and assistants, all onsite project administration, security costs, the cost of small tools and consumables, incidental job burdens, and all general home office expenses and no separate allowance will be made therefor. Assistants to field and office supervisors include all clerical, stenographic, and general office help. Incidental job burdens include, but is not limited to, office equipment and supplies, temporary toilets, telephone, utilities, safety equipment, warning devices, personal protective equipment, and conformance to OSHA requirements. Project administration includes, but is not limited to, review and coordination, estimating, engineering, scheduling, and expediting relative to Change Orders, and updating and furnishing Record Drawings to incorporate changes, schedule update, supervision not applied solely to the Work of the Change Order, home office salaries and expenses, and City of Los Angeles Business Tax. The following maximum markup percentages shall be applied to the total amount of direct expenditures of the Contractor and Subcontractors, as noted in the Change Order Cost Summary Form.

Table A

Changed/Extra Work – Direct Costs	Markup Percentage
Contractor Direct Labor	20%
Contractor Direct Materials, Equipment, Other Items	15%
Subcontractor (of any tier) Direct Labor	20%
Subcontractor (of any tier) Direct Materials, Equipment, Other Items	15%
Contractor Administrative Fee for Subcontractor's (of any tier) Direct Labor, Materials, Equipment, Retail Rental Equipment, Other Items	5%

2. Bonds and Insurance

An additional allowance of one percent (1%) of all direct costs (less markup) is allowed.

3. Add/Deduct Changes

The overhead rates determined above shall be applied to all additive Change Orders, except those utilizing as-bid Unit Prices or Stipulated prices listed in the Bid Proposal.

Any change in the Work involving both extras and credits shall show a net total cost, including subcontracts. Allowances for overhead and profit to the net total cost, as specified herein above, shall be applied if the net total cost is an extra; overhead and profit allowances shall not be applied if the net total cost is a credit. When the credit is due to a reduction in unit price quantity, the Contractor shall not be entitled to retain the markups in E.1 above for the reduced quantity. The estimated cost of deductions shall be based on labor and material prices on the date the Contract was signed.

F. City Furnished Materials, Equipment and Services

The Engineer reserves the right to furnish materials, equipment and services deemed expedient for use on the Change Order Work. The Contractor shall have no claim for profit or overhead on the cost of such materials, equipment and services.

G. Equipment Costs

The rates for rental or leased equipment shall not exceed the rates listed in the Rental Rate Blue Book (the Blue Book) published by Primedia Information, Inc., San Jose, California, as adjusted to the regional area of the Work under this Contract. For T&M Change Orders, the rates are established by the actual paid invoice(s) that comply with the requirements of Subsections G.1 and G.3. Owned equipment costs shall not exceed the rates established by Subsection G.2. The most recent published edition in effect at the commencement of actual equipment use on Change Order Work shall be used.

The rates paid for any rented or leased equipment or tools shall include the cost of fuel, oil, lubrication, supplies, small tools, necessary attachments, repairs and maintenance of any kind, depreciation, storage, insurance, profit and all incidental costs associated with the operation of the equipment or tools.

It is the responsibility of the Contractor to include any appurtenances added to equipment which would increase the basic rate for said equipment (i.e., hoe-ram, oversize bucket, etc.) as established in the acceptable rental rate guide. All equipment and/or tools shall be acceptable to the Inspector, in good working condition, suitable for the purpose for which it is to be used, and necessary to complete the Change Order Work. Payment will be based on the manner in which the equipment was actually powered, operated and modified per the equipment manufacturer's recommendations.

1. Rented or Leased Equipment

   For equipment rented or leased (including lease with purchase option) in arm's length transactions from outside vendors, the Contractor shall be paid the actual invoiced, rented or leased rates provided that the invoiced lease or rental rates do not exceed the rates set forth in the Blue Book. Arm's length rental or lease transactions are those in which the firm involved in rental or lease of such equipment is not associated with, owned by, have common management, directorship, facilities, or stockholders with the firm renting the equipment. Submittal by a Contractor of a retail rental or leased invoice from the lessor will be prima facie proof of compliance with the above. However, such invoices are not conclusive proof; if questioned, the burden of proof remains with the Contractor. In no event shall the leased equipment rate billed to the City be at rates exceeding those prescribed in the following table:

Actual Usage (Change Order & Contract Work Combined)	Payment Category
Less than 8 hours	Hourly Rate
8 or more hours but less than 7 days	Daily Rate
7 or more days but less than 30 days	Weekly Rate
30 calendar days or more	Monthly Rate

   a. When in Use:

      Actual equipment use time documented by the Inspector shall be the basis that the equipment was utilized on the changed work and paid for under the T&M Change Order. In addition to the lease or rental rate, equipment-operating costs shall not exceed the estimated hourly operating rate as set forth in the Blue Book. The hours of operation shall be based upon actual equipment usage on the T&M Change Order Work as recorded by the Inspector. For multiple shift work sequences, the allowable equipment rate shall not exceed fifty percent (50%) of the base rate, for second or third shifts.

   b. When Idle:

      Idle equipment is equipment on site and necessary to perform the T&M Change Order Work, but periodically not in actual use due solely to the

impact of the changed work. Equipment operating costs due to idle time, documented by the Inspector, shall be paid at the rate determined in "G" (1) above. The "ESTIMATED OPERATING COST $/HR" will not be paid when the equipment is idle. Idle time shall include a reasonable time allowance to and from the project site. Payment for equipment necessary to be on the site to complete the Work, but not in actual use due solely to the impact of the T&M Change Order Work, shall be paid per Caltrans Standard Specifications Section 8-1.07C, provided that its presence and necessity on the site has been documented by the Inspector, and further provided that the equipment was idled solely by actions of the City.

Payment for equipment or tools shall be limited to hours actually used on the T&M Change Order Work if the equipment or tool is already on site for Work under the original Contract. No "standby" time will be paid for equipment already on site for Work under the original Contract. Mark Up for retail rental equipment will be per Table A in Section E.1.

If equipment or tools are used intermittently and, when not in use, could be returned to the rental source at less expense than holding it at the work site, it shall be returned, unless the Contractor elects to keep it at the work site at no expense to the City.

2. Owned and Other Equipment

Equipment rates for owned equipment or equipment provided in other than arm's length transactions shall not exceed the total hourly costs as set forth in the Caltrans "Labor Surcharge and Equipment Rental Rates" effective at the time the T&M Change Order Work is performed. (The Caltrans equipment rental rates are available on the internet at http://www.dot.ca.gov/hq/construc/equipmnt.html.) If the equipment is not listed in Caltrans, then the Owned Rental Rate Blue Book shall be used. When using the Blue Book, the hourly rate for any period less than 7 days shall be the weekly rate divided by 40, plus the Operating Cost. Except as noted herein below, this equipment hourly rate plus the estimated operating cost per hour from the Blue Book will be paid for each hour the equipment actually performs the T&M Change Order Work. Daily records listing the equipment units and their respective operators, identification code, and actual usage on the T&M Change Order Work, as certified at the end of each work day (or work shift if the Work is being performed in multiple work shift sequence) by the Inspector shall be the record upon which actual equipment use shall be based. For multiple shift work sequences, the Caltrans overtime factor shall be applied. When using the Blue Book, one-half the Non-Operating Cost will be deducted for second and third shifts. The Non-Operating Costs are the Blue Book monthly or weekly/40 rates, as applicable. It is agreed that this rate shall represent payment in full for all the Contractor's and Subcontractor's direct costs.

a. When Idle:

Payment for equipment necessary to be on the site to complete the Work, but not in actual use due solely to the impact of the changed work, shall be paid per Caltrans Standard Specifications Section 8-1.07C, provided that its presence and necessity on the site has been documented by the Inspector, and further provided that the equipment was idled solely by actions of the City. (When using the Blue Book the payment for idle time shall not exceed fifty percent (50%) of the Non-Operating Cost.) Idle

equipment time will only be paid as a function of delays specifically directed or caused by the City's actions. In no event shall the idle time claimed in a day for a particular piece of equipment exceed the normal work schedule established for the project - usually eight (8) hours per day or forty (40) hours per week, and excluding Saturdays, Sundays, and holidays. For multiple shift work sequence, the allowable idle equipment rate shall not be allowed, for second or third shifts. It is agreed that this rate shall represent payment in full for all the Contractor's and Subcontractor's direct costs.

3. Equipment Haulage and Set-up Costs

Documented and actual equipment haulage and set-up costs shall be paid for, if applicable as set forth in Subsection B.3.

4. Other Equipment Cost Guides

In the event that an owned piece of equipment used on a Change Order is not listed in Caltrans or the Blue Book, costs may be derived from the Associated General Contractor's of America Equipment Ownership Guide, the Associated Equipment Dealers Guide, or the Equipment Rate Guide published by the U.S. Army Corps of Engineers as adjusted appropriately for the type of work and use and the regional area of the Work under this Contract.

H. Records

At any time should the Contractor deviate substantially from the schedule, method and sequence of operation, equipment, cost or pricing data furnished by the Contractor and agreed to by the City in connection with the Change Order or should the City determine that any price negotiated in connection with the Change Order is defective due to such deviation or the fault of the Contractor, the City reserves the right to reduce the Change Order cost and reissue the Change Order at the amount in which the City determines to be the actual costs to complete the Change Order Work.

Whenever any material or process is indicated or specified by patent or a proprietary name, or by name of a manufacturer in the Change Order, such direction shall not relieve the Contractor's responsibility or obligation to perform Work in accordance with the Contract requirements. The Contractor shall be solely responsible for, and have control over construction means, methods, techniques, sequences and procedures, coordination of all portions of the Contract and Change Order Work.

The Contractor shall on a weekly basis submit an approximate accounting of the amount expended on the T&M Change Order Work to date and an estimate of the Impact to the time of performance of the Contract Work.

I. Partial Payments for Time and Materials Change Order Work.

Progress payments for T&M Change Order Work shall only be made if the anticipated cost of the changed work is in excess of $100,000 and/or the time to perform the changed work will exceed two (2) months duration. To receive payments for T&M Change Order Work, the Contractor shall submit to the Engineer an invoice of the daily reports which were verified by the Inspector, with details and documents, verifying the Contractor's and Subcontractor's actual costs incurred for the T&M Change Order Work as set forth in Subsections B through H. Costs shall be submitted within thirty (30)

calendar days after the T&M Change Order Work has been satisfactorily completed unless an extension of time for submittal is authorized in writing by the Inspector.

J. Field Office Overhead - Rate Per Day:

Subject to the provisions of this Subsection and "Temporary Suspension or Delay of Work" of General Conditions, for each day of approved time extension due solely to extras, changes, and additions to the Work, Contractor shall be entitled to compensation for additional Daily Field Office Overhead as set forth herein. As a further condition to the Contractor's right to such additional compensation, the Contractor shall submit a detailed listing of the Daily Field Office Overhead cost components which are time related. The individual cost components shall represent costs which have been or will be incurred or increased as a sole or direct result of the time extension. This listing may include, but is not limited to, onsite project management, supervision, engineering, and clerical salaries; onsite office utilities and rent; onsite company vehicles and their operating expenses; site maintenance and security expenses. Daily Field Office Overhead costs which are unaffected by the increased time or time extension in the Change Order shall not be allowable costs of the Daily Field Office Overhead rates. These cost components include, but are not limited to, acquisition and installation of plant, stationary equipment, temporary construction facilities, utilities and office furnishings (unless such items are rented or leased); the preparation of the site including clearing, grubbing, grading, and fencing; and mobilization and demobilization expenses. The listing of the Daily Field Office Overhead cost components described above must be based on the Contractor's actual Field Office Overhead costs. This listing must be submitted with the first Change Order proposal that includes a time extension request per Subsection D. If the Contractor's time related Daily Field Office Overhead cost changes for subsequent compensable delays, then the Contractor shall submit a new Daily Field Office Overhead rate based on the Contractor's time related Daily Field Office Overhead costs at the time of the subsequent delay. If change order work is performed during a compensable delay, any Daily Field Office Overhead costs paid by that change order shall be deducted from the compensation owed for additional Daily Field Office Overhead during the same time period.

The Daily Field Office Overhead rate shall be multiplied by the number of days the Contract is to be extended in the Change Order, and shall then be added to the agreed upon costs of the Change Order. No markup for overhead costs and no profit allowance shall be allowed on the Extended Daily Field Office Overhead cost component of the Change Order. The derivation of an extended home office overhead rate and its application to Contract time extensions shall not be allowed.

The information submitted above shall be submitted in sufficient detail to allow review and shall be prepared in accordance with generally accepted accounting principles and applicable portions of the Federal Acquisition Regulations. The Engineer shall have the right to have an audit of the Contractor's costs performed, at the Contractor's sole expense, if the costs submitted are considered by the Engineer to be excessive, questionable, or unsupported. The overhead rates determined above shall be applied to all additive Change Orders, except those utilizing original as-bid unit prices under Subsection A.

END OF SECTION

THIS PAGE INTENTIONALLY LEFT BLANK

SECTION 01255
PRICE REDUCTION FOR DEFECTIVE COST OR PRICING DATA

1.1 THE REQUIREMENT

A. If the ENGINEER determines that any price, including profit or fee, negotiated in connection with any Change Order under this Contract, or any cost reimbursable under this Contract, was increased because:

1. the CONTRACTOR furnished cost or pricing data, which was not accurate, complete, and current as certified in the CONTRACTOR'S Certificate of Current Cost or Pricing Data;

2. a Subcontractor or prospective Subcontractor furnished cost or pricing data was submitted in support of a subcontract cost estimate furnished by the CONTRACTOR, but which was not accurate, complete, and/or current as of the date certified in the CONTRACTOR'S Certificate of Current Cost or Pricing Data; or,

3. the CONTRACTOR or a Subcontractor or prospective Subcontractor, at any tier, furnished any data not within subsection 1.1A(1) or 1.1A(2), above, which was not accurate as submitted;

then the price shall be reduced accordingly, and the Contract shall be modified in writing as may be necessary to reflect such reduction. However, any reduction in the Contract price due to defective subcontract data of a perspective Subcontractor, when the subcontract was not subsequently awarded to such Subcontractor, will be limited to the amount (plus applicable overhead and profit allowances) by which the actual subcontract or actual cost to the CONTRACTOR if there was no subcontract, was less than the prospective subcontract cost estimate submitted by the CONTRACTOR; provided that the actual subcontract price was not affected by defective cost or pricing data.

B. The following certification from the CONTRACTOR is required to be provided on all Change Order quotations or requests for equitable adjustment in excess of ten-thousand dollars ($10,000).

CERTIFICATION OF CURRENT COST
AND PRICING DATA

This is to certify that, to the best of my knowledge and belief, cost or pricing data submitted in writing, or specifically identified in writing if actual submission of the data is impracticable, to the CITY in support of **[CONTRACTOR is to insert appropriate identification such as Change Order quotation, proposal quotation, price adjustment, etc.]** are accurate, complete, and current as of **[CONTRACTOR to insert date].**

CONTRACT NO.: _____
PROPOSED CHANGE ORDER NO.: _____
FIRM: _____
NAME: _____
TITLE: _____
DATE: _____
SIGNATURE: _____

END OF SECTION

SECTION 01270
MEASUREMENT OF QUANTITIES FOR UNIT PRICE WORK

1.1 THE REQUIREMENT

A. General

1. Unless otherwise specified, quantities of work shall be determined from measurements or dimensions in horizontal planes. However, linear quantities of pipe, piling, fencing and timber shall be considered as being the true length measured along longitudinal axis.

2. Unless otherwise provided in Specifications, volumetric quantities shall be the product of the mean area of vertical or horizontal sections and the intervening horizontal or vertical dimension. The planimeter shall be considered an instrument of precision adapted to measurement of all areas.

B. Methods of Measurement

1. Materials and items of Work which are to be paid for on basis of measurement shall be measured in accordance with methods stipulated in the particular sections involved.

C. Certified Weights

1. When payment is to be made on the basis of weight, the weighing shall be done on certified platform scales or, when approved by the ENGINEER, on a completely automated weighing and recording system. The CONTRACTOR shall furnish the ENGINEER with duplicate licensed weighmaster's certificates showing actual net weights. The CITY will accept the certificates as evidence of weights delivered.

D. Units of Measurement

1. Measurements shall be in accordance with Section 01420 - UNITS OF MEASURE of the GENERAL REQUIREMENTS. A metric ton or "tonne" is equal to 1,000 kilograms and the unit of liquid measure is a Liter (in U.S. Standard Measures, a pound is an avoirdupois pound; a ton is 2,000 pounds avoirdupois; and the unit of liquid measure is a gallon).

END OF SECTION

THIS PAGE INTENTIONALLY LEFT BLANK

SECTION 01280
MEASUREMENT AND PAYMENT

PART 1 - GENERAL

1.01 PAYMENT

A. Upon Contract award, the accepted Schedule of Work and Prices shall become the Payment Schedule. Payment for Work under the Contract shall be made at the unit prices listed in the Payment Schedule. For lump sum bid items, payment shall be made in accordance with Section 01298.

B. Payment for the measured quantities of Work performed shall be considered full compensation for all of the CONTRACTOR's costs associated with the performance of the Work. These costs comprise direct labor, materials, tools, equipment, transportation, supplies, incidentals, and subcontract Work; and indirect costs such as field and home office overhead, consulting and design services, establishment, operation and removal of general plant, taxes, insurance, permits, bond, profit, and contingencies for the performance of all Work specified.

C. The costs for conforming to the requirements for measuring quantities shall be considered included in the fixed, unit, or lump-sum prices paid for the quantities being measured, and no additional compensation will be made therefore.

D. Except for items subject to the Variation in Quantities clause, the unit prices listed in the Payment Schedule shall be applicable for calculating the amount payable under each item of the Schedule. Estimated quantities indicated in the Payment Schedule are for bidding purposes only. Payment will be determined by actual measured quantities of the Work installed/performed as verified by the INSPECTOR.

E. Work specified or shown on the drawings for which the Payment Schedule does not provide a separate lump sum or unit price is considered incidental and is not separately paid. The cost for such Work is compensated in the prices bid for other Work items and no additional compensation shall be allowed.

1.02 MEASUREMENT OF QUANTITIES

A. Measure quantities in accordance with standard industry practice and as specified herein. The CITY will verify measurements. Measure quantities to the nearest whole number of units. Round down fractional units less than one-half; round up fractional units one-half or greater.

1. Measure sewer debris volumes by weight as described herein.

2. Measure areas in two mutually perpendicular axes in the plane of the surface being measured.

3. Measure linear quantities along the longitudinal centerline of the item, except as otherwise specified.

B. Measurement of a lump sum item shall be for the entire item, unit of Work, structure, or combination thereof, as listed or indicated in the Payment Schedule, except as otherwise specified. Progress payments for lump sum items in the Payment Schedule shall be made in accordance with Section 01298.

C. Determine quantities of Work performed for payment purposes and submit them to the INSPECTOR for approval. Assist the INSPECTOR in the taking of measurements by providing equipment, workers, and survey crews as required to verify quantities in accordance with the provisions for measurement specified herein.

1.03 REJECTED, EXCESS, AND WASTED MATERIALS

A. The following shall not be measured for payment:

1. Quantities of material wasted or otherwise disposed.

2. Rejected loads of material, including material rejected after it has been placed for failure to comply with specified requirements.

3. Material remaining on the transporting vehicle or in the pipeline.

4. Muck material not removed from designated location.

5. Material placed outside specified or indicated lines or limits.

6. Material not incorporated into the Work.

7. Material remaining on hand after completion of the Work.

B. No payment will be made for loading, hauling, and disposing of rejected material.

1.04 PAYMENT SCHEDULE

A. **BID ITEM 1: MOBILIZATION and Demobilization per the General Requirements including a Modified Class "B" Field Office with Air Conditioning, Sections 01292 and 01721 (Lump Sum)**:

1. The amount payable under this item is fixed at the bid price. This bid price for costs of work in advance of construction operations. This Bid Item is not included and attributable directly to any other specific Bid Items. For progress payments, the amount payable under this item shall be determined in accordance with Section 01292.

2. The Work shall include:

a. The movement of personnel, equipment, supplies and incidentals to the project sites.

b. Temporary laydown area and obtaining all permits and clearance requirements to secure and utilize the laydown area.

c. The establishment of field offices, parking, utilities and other facilities at the Work Area Sites for the CITY and the CONTRACTOR, as specified in Section 01721.

d. Work, such as engineering designs and submittals, must be performed and expended in advance of actual construction. This Work shall include any additional investigations of the condition of the NOS that the CONTRACTOR deems necessary to conduct the Work in compliance with applicable safety and other regulatory requirements.

e. Applying for permits (if applicable) and coordinating work with other agencies such as USACE, LADOT, AQMD, LADBS, LADWP, SCG and other utility companies and public agencies.

f. Work, such as handling homeless encampment within and/or adjacent to work site (if applicable) & community outreach regarding disruption to the Los Angeles River Bike Path and Recreational Parks (if applicable) at pit locations and bypass locations must be performed and resolved during mobilization. This work shall be, but is not limited to, installation 12 feet chain link and gates per S-691 around the pit(s) and/or at field office locations.

CONTRACTOR shall coordinate with Public Affair Office (PAO) of BOS for any related issues mentioned above:

Tonya Durrell
(213) 978-0333 (office)
(213) 798-6085 (cell)
Tonya.durrell@lacity.org

In addition, contact LA - Homeless Services Authority at (213) 225-6581 to handle any homeless issues.

CONTRACTOR shall comply with all instructions and requirements of the PAO and the Mayor's office regarding homeless encampment issues. In addition, the CONTRACTOR shall comply with all instructions and requirements by the PAO, LADOT, LA County, and Mayor's office regarding any construction/bypass activities. All the costs related and associated with these issues shall be included in the Bid Item 1 "Mobilization".

B. BID ITEMS 2 through 10: Allowance Items:

1. Allowance items have been established in the Bid Schedule to compensate the CONTRACTOR for the cost of performing such items as the CITY may require for the construction of the Work, but for which it is impracticable to ascertain the scope prior to bid. If the total cost compensable under each allowance item differs from the amount set forth in the SCHEDULE OF WORK AND PRICES, the Contract Price shall be adjusted by a Change Order for the difference between the total actual costs and the allowance amount as an additional amount due the CONTRACTOR or a credit to the CITY, as appropriate.

2. Reimbursement for all allowance items shall be as determined by GR-Section 01212.

3. The allowance items are as follows:

   a. **BID ITEM 2: Allowance for Differing Site Conditions per the General Requirements, Section 01253**:

   This allowance will compensate the CONTRACTOR the additional expenses and measures taken to address and to mitigate Differing Site Condition(s) as defined and approved by the CITY per conditions set forth in Section 01253 of the specification in addition to abandoning and/or relocation of site utilities encountered during

construction but not shown on the current project plans as directed by the CITY or the ENGINEER.

This allowance will compensate CONTRACTOR in the event of an omission of an existing utility in the contract, or if an existing utility needs to be relocated due to its location in the field differing significantly from that shown in the contract drawings, and in the opinion of the ENGINEER that the utility relocation is necessary to avoid impacting the Work. If actual utilities are within 2 feet off location shown on the drawings (centerline to centerline), there will be no compensation provided under this bid item. This allowance shall not compensate the CONTRACTOR to relocate existing utilities shown on the contract drawings proposed or specified for relocation by others.

b. **BID ITEM 3: Allowance for Payments for Permits per the General Requirements, Section 01721:**

(1) Reimbursement for CONTRACTOR's expenses for permits fees without compensation for any mark-ups. The CONTRACTOR shall include in the Bid the amount stipulated under PERMITS in the SCHEDULE OF WORK AND PRICES in the Bid Proposal as an allowance for the costs of all required permits. Permits anticipated for the project are listed in Section 01721 - Mobilization.
(2) Costs shall be limited to the actual fees paid to the agencies and will be reimbursed based on original receipts only. No overhead, profit, or mark-ups shall be added to the cost of the permits. The CONTRACTOR shall deliver to the ENGINEER with each permit the original receipt. After all permits have been obtained and delivered, the actual costs of all permits shall be reviewed by the CONTRACTOR and the ENGINEER.
(3) Includes cost of inspections by City of Los Angeles Department of Public Works Bureau of Engineering.

Reimbursement for CONTRACTOR's expenses for permits fees without compensation for any mark-ups. The CONTRACTOR shall include in the Bid the amount stipulated under PERMITS in the SCHEDULE OF WORK AND PRICES in the Bid Proposal as an allowance for the costs of all required permits.

Costs shall be limited to the actual fees paid to the agencies and will be reimbursed based on original receipts only. No overhead, profit, or mark-ups shall be added to the cost of the permits. The CONTRACTOR shall deliver to the ENGINEER with each permit the original receipt. After all permits have been obtained and delivered, the actual costs of all permits shall be reviewed by the CONTRACTOR and the ENGINEER.

c. **BID ITEM 4: Allowance for Community Impacts Mitigation per the General Requirements, Section 01254:**

This allowance bid item shall be used solely to reimburse any/all CONTRACTOR's costs associated with performance of extra work related to community relations at the direction of the ENGINEER.

Reimbursement shall be determined by Section 01254 of the General Requirements.

(1) Compensation for noise, vibration and other mitigation measures beyond the requirements indicated and specified in Sections 01561 and 01562 of these GENERAL REQUIREMENTS.

This allowance shall not compensate CONTRACTOR for costs associated with applying for or complying with requirements established because of any CONTRACTOR request for nighttime work hours beyond the allowable working hours. This allowance shall not compensate CONTRACTOR for any means or methods or required change to its means or methods to comply with Sections 01561 and 01562 of the GENERAL REQUIREMENTS.

(2) Construction Mitigation Fund: As part of CITY's Public Outreach Program, a Construction Mitigation Fund has been established which can include, but is not limited to, the following types of mitigation efforts by the CONTRACTOR to assist nearby residents or businesses, as approved by the City of Los Angeles Department of Public Works Public Affairs Office staff:

a. Purchasing car washing certificates, house cleaning/window washing certificates for residents near construction to mitigate for dust from the project site.

b. Coordinating with local businesses and property owners to allow access to their businesses/properties during construction.

c. Producing and posting signs or banners for nearby businesses to inform customers that they are open during construction or to direct customers to an alternate access point.

d. Producing and placing an advertisement in the local newspaper to announce that the businesses near the construction are open during construction and/or to announce that the construction has finished, and the businesses are open.

d. **BID ITEM 5: Allowance for Removal and Haul Away of Contaminated Soil, Lakebed Material, and Railroad Ties (if found):**

(1) This allowance shall compensate the CONTRACTOR for removal and disposal of lakebed materials and debris removed from MacArthur Lake, and any abandoned railroad ties and associated contaminated soils encountered.
(2) This allowance will compensate the CONTRACTOR for all costs related to the handling of waste generated from dredging activities at MacArthur Lake including, but not limited to, environmental assessments, waste containment, transportation, and proper waste disposal.

e. **BID ITEM 6: Allowance for Opportunity to Partner per the General Requirements, Section 01353:**

Reimbursement of 100 percent of the expenses for partnering, as determined by Section 01353 of these GENERAL REQUIREMENTS. There shall be no mark-ups for overhead or profit.

e. **BID ITEM 7: Allowance for CEQA Mitigation Measures including biological, paleontological, archeological, noise, and vibration monitoring per the General Requirements, Sections 01280 and 01562 (MMP):**

(1) This allowance shall be used for any CEQA mitigation measures and performing archaeological and paleontological monitoring and shall include any costs associated with MN–CR 1–4 and TCR 1-3.
(2) This allowance shall be used for mitigating noise impacts related to the project. Shall include any costs associated with NV-2.
(3) This allowance shall be used for mitigating vibration impacts to historical buildings in the vicinity of the project. Shall include any costs associated with NV-2.
(4) For further details refer to Sections 01562 of the GENERAL REQUIREMENTS.

f. **BID ITEM 8: Allowance for Permanent Water Feature Fencing:**

This allowance shall be used for the construction of a fence around the proposed vegetated water feature for safety. The CONTRACTOR shall submit fencing plans to the Engineer for approval prior to fence installation.

h. **BID ITEM 9: Allowance for Utility Relocation and/or Support:**

This allowance shall not be used to compensate the CONTRACTOR for any power pole conduits and/or any utility relocation not shown on plans and includes all overhead utilities and all necessary work involved to relocate any utilities if the need arises. Utilities may need relocation if they conflict with the construction of the access pits, maintenance holes and junction structures.

C. BID ITEM 10: Stormwater Pollution Prevention Plan (SWPPP):

1. Lump sum amount for implementing the Stormwater Pollution Prevention Plan (SWPPP) included in the Contract Documents and determined by Section 01571 - Stormwater Pollution Control Measures for Construction Activities.

D. BID ITEM 11: Erosion Control:

1. Lump sum amount for erosion control materials included in the Contract Documents.

E. BID ITEM 12: WTCP Design, Approval, and Implementation:

1. Lump sum amount for project traffic control during construction, including engineering the Traffic Control Plan and DOT fees.

F. BID ITEM 13: Temporary Shoring:

1. Lump sum amount for temporary shoring (soldier piles, lagging) required for installing vaults, manholes, pretreatment units, secondary treatment units, and other below-ground structures as included in the Contract Documents.

G. BID ITEM 14: Trench Shoring:

1. Lump sum amount for trench shoring required for all piping installation as included in the Contract Documents.

H. BID ITEM 15: Pretreatment Unit:

1. Lump sum amount for all work involving procurement and installation of the new Pretreatment Unit and associated connecting piping, including sawcutting, excavation, delivery, installation, backfill and compaction, hauling away and disposal, and other incidentals not in other bid items. See Contract Documents.

I. BID ITEM 16: Secondary Treatment Unit and Associated Piping:

1. Lump sum amount for all work involving procurement and installation of the Secondary Treatment unit (Storm Filter or Approved equal) and associated piping, including sawcutting, excavation, delivery, installation, backfill and compaction, hauling away and disposal, and other incidentals not in other bid items. See Contract Documents.

J. BID ITEM 17: Demolition Related to Piping:

1. Lump sum amount for demolition work related to piping including relocating utility gas lines, removing and replacing curb and gutters, and removing slide gates, as included in the Contract Documents.

K. BID ITEM 18: Buried Storm Drain Piping - Pressure:

1. Lump sum amount for all work involving the procurement and installation of pressure pipeline, tees, and bend connecting wet well/pump station to 7th Street, in park parallel to 7th street, and ending in pressure to gravity transition structure in the park, including sawcutting, excavation, delivery, installation, backfill and compaction, hauling away and disposal, and other incidentals not in other bid items. See Contract Documents.

L. BID ITEM 19: Buried Storm Drain Piping - Gravity:

1. Lump sum amount for all work involving the procurement and installation of pipeline, tees, bends, and concrete collars conveying stormwater from the secondary treatment unit to the lake, returning flows exceeding lake capacity to the 54" Storm Drain in Grand View Street and the pipeline connection junction structure, and the gravity pipeline draining the lake connecting to the existing sewer in 7th Street including sawcutting, excavation, delivery, installation, backfill and compaction, hauling away and disposal, and other incidentals not in other bid items. See Contract Documents.

M. BID ITEM 20: Manholes:

1. Lump sum amount for all work involving the procurement and installation of all manholes, junction structure, and air vent pipe specified in the project design including sawcutting, excavation, delivery, installation, backfill and compaction, hauling away and disposal, and other incidentals not in other bid items. See Contract Documents.

N. BID ITEM 21: Vaults:

1. Lump sum amount for all work involving the procurement and installation of all vaults specified in the project design including sawcutting, excavation, delivery, installation, backfill and compaction, hauling away and disposal, and other incidentals not in other bid items. See Contract Documents.

O. BID ITEM 22: Pavement Removal and Replacement for Pipe Installation:

1. Lump sum amount for AC pavement and concrete pavement removal and replacement over pipe installations, including striping, including sawcutting, excavation, delivery, installation, backfill and compaction, hauling away and disposal, and other incidentals not in other bid items. See Contract Documents.

P. BID ITEM 23: Piping From Pump House to Cascading Water Feature:

1. Lump sum amount for piping to the existing pump house, including sawcutting, excavation, delivery, installation, backfill and compaction, hauling away and disposal, and other incidentals not in other bid items. See Contract Documents.

Q. BID ITEM 24: Large Pipe Connections and Existing Pipe Supports:

1. Lump sum amount for all other buried process piping not included in other bid items such as temporary pipe supports, lake discharge pipe, 48-inch sewer connection in 7th street, and 54-inch storm drain connection in Grand View Street including sawcutting, excavation, delivery, installation, backfill and compaction, hauling away and disposal, and other incidentals not in other bid items. See Contract Documents.

R. BID ITEM 25: Valves and Flow Meters:

1. Lump sum amount for procurement and installation of all process equipment not included in other bid items, including all flow meters and valves, including sawcutting, excavation, delivery, installation, backfill and compaction, hauling away and disposal, and other incidentals not in other bid items. See Contract Documents.

S. BID ITEM 26: Pump Station in Lake Street:

1. Lump sum amount for all work involving procurement and installation of the new Pump Station in Lake Street including sawcutting, excavation, delivery, installation, backfill and compaction, hauling away and disposal, and other incidentals not in other bid items. See Contract Documents.

T. BID ITEM 27: Cascading Water Feature Recirculation Pump:

1. Lump sum amount for all work involving procurement and installation / replacement of pump house pump, including sawcutting, excavation, delivery, installation, backfill and compaction, hauling away and disposal, and other incidentals not in other bid items. See Contract Documents.

U. BID ITEM 28: Demolition for Cascading Water Feature:

1. Lump sum amount for demolition of existing materials in cascading water feature area as shown in Contract Documents. Includes clearing and grubbing, removal of lake wall, removal of bench, relocating irrigation, and removal and restoration of ADA ramp.

.

V. BID ITEM 29: Earthwork for Cascading Water Feature:

1. Lump sum amount for earthwork needed to install cascading water feature as shown in Contract Documents, including excavation, hauling, and backfill.

W. BID ITEM 30: Plantings, Groundcover, and Landscaping:

1. Lump sum amount for procurement and installation of all plantings, groundcover, and landscaping as shown in Contract Documents.

X. BID ITEM 31: Trees:

1. Lump sum amount for procurement and installation of tree protection for existing trees and labor and materials needed to procure and install new trees, as shown in Contract Documents.

Y. BID ITEM 32: Prefabricated Bridge and Associated Work:

1. Lump Sum amount for procurement and installation of prefabricated bridge structure, custom panels, connections to existing sidewalk, including delivery, installation, backfill and compaction, hauling away and disposal, and other incidentals not in other bid items. See Contract Documents.

Z. BID ITEM 33: Irrigation System:

1. Lump Sum amount for procurement and installation of irrigation system updates and lake water recirculation system (with connection to existing 6" DIP and outlet at Cascading Water Feature), including delivery, installation, and other incidentals not in other bid items. See Contract Documents.

AA. BID ITEM 34: Cascading Water Feature Elements:

1. Lump Sum amount for Cascading Water Feature elements including procurement and installation of concrete paving, mow curb, boulders, cobbles, weir walls, and curbs, including delivery, installation, backfill and compaction, and other incidentals not in other bid items. See Contract Documents.

BB. BID ITEM 35: Project Information Signs per standard plan S-791-1 Type II (GR 01581):

1. Lump Sum amount for procurement and installation of project information sign per standard plan S-791-1 Type II (GR 01581), and Educational Sign, as included in the Contract Documents.

CC. BID ITEM 36: Project Credit Sign per standard plan S-791-1 Type I (GR 01581):

1. Lump Sum amount for procurement and installation of two (2) project credit signs per standard plan S-791-1 Type I (GR 01581), as included in the Contract Documents, and one (1) Type IV Building Credit Sign.

DD. BID ITEM 37: Six (6) Month Maintenance Period of Landscape:

1. Following a 120-day plant establishment period (as per specifications Section 02930 - Landscape Maintenance), a certification of partial completion shall be issued, after which this bid item (lump sum) for 6-Month Maintenance Period will start after project completion. This bid item is for the Six (6) Month Maintenance Period per specification Section 02930 - Landscape Maintenance by the CONTRACTOR. The Unit bid price shall include all work including labor, materials, equipment.

EE. BID ITEM 38: Electrical Demolition:

1. Lump Sum amount for Demolition and Sawcutting inside Pump House, light pole demolition and relocation related to electrical work in the park, and demolition of existing pump to be replaced with water feature recirculation pump, as included in the Contract Documents.

FF. BID ITEM 39: MCC Section and Feeder Breaker:

1. Lump sum amount for procurement and installation of MCC Section and Feeder Breaker and MCC breaker replacement, as included in the Contract Documents.

GG. BID ITEM 40: PLC Cabinet with A/C:

1. Lump sum amount for procurement and installation of PLC Cabinet with A/C as included in the Contract Documents.

HH. BID ITEM 41: System Integration and Programming:

1. Lump sum amount for procurement and installation of System Integration and Programming, including coordination with City of Los Angeles ICSD, as included in the Contract Documents.

II. BID ITEM 42: Junction Boxes, Switches, Handholes, Electrical Vaults, and Ductbanks:

1. Lump sum amount for procurement and installation of Junction Boxes, Switches, Handholes, Electrical Vaults, and Ductbanks, as included in the Contract Documents.

JJ. BID ITEM 43: Instrumentation, Flow Meters, Level Transmitters:

1. Lump sum amount for procurement and installation of Instrumentation, Flow Meters, Level Transmitters, pump station instrumentation, float switches, and hydrocarbon detection device, as included in the Contract Documents.

KK. BID ITEM 44: Electrical Labor, Studies, and Testing:

1. Lump sum amount for start, testing, and commissioning of equipment as described in GR-Section 01810 - Fundamental Commissioning Requirements. Lump sum amount for testing and commissioning of electrical equipment installed. List of items for commissioning included in Section 01810 - Fundamental Commissioning Requirements - Training scope and requirements included in Section 01820 - Operations and Maintenance Training. This item includes electrical studies (Arc-flash, SC).

END OF SECTION

SECTION 01291
NOTICE TO WITHHOLD AND/OR STOP NOTICE

1.1 THE REQUIREMENT

A. When a "Notice to Withhold" or "Stop Notice" is served upon the CITY, or the Board, pursuant to the lien statutes of the State of California, to withhold sufficient funds from payments to the CONTRACTOR in support of a claim resulting from default by the CONTRACTOR in payment for labor or materials used in prosecution of the Contract, the CITY shall withhold from payment due the CONTRACTOR an amount of money equal to the amount of the claim stated in the "Notice to Withhold" or "Stop Notice," and an additional amount equal to twenty-five percent (25%) of the amount of said claim, to defray the costs of litigation in the event of court action on the claim, for a total withholding of one and one quarter (1-1/4) times the stated amount of the claim. At the discretion of the CITY, the CITY may allow the CONTRACTOR to file with the CITY the bond referred to in the Civil Code of the State of California after which said monies will not be withheld on account of such "Notice to Withhold" or "Stop Notice."

B. In the event the Contract is terminated for CONTRACTOR default, any funds due the CONTRACTOR and retained by the CITY in accordance with SECTION 01292 - PAYMENTS of these GENERAL REQUIREMENTS, shall become the property of the CITY to the extent necessary to repay to the CITY any excess in the Contract Price above the cost of the Work completed at the time of termination. After issuance of Notice To Discontinue Work, no further payments will be made to the CONTRACTOR for the Work covered by the notice until completion of work and final settlement has been made.

END OF SECTION

THIS PAGE INTENTIONALLY LEFT BLANK

SECTION 01292
PAYMENTS

1.1 PAYMENT FOR MOBILIZATION

A. Payment for mobilization shall be limited to those items of work described in MOBILIZATION of these GENERAL REQUIREMENTS. Whether Mobilization is included as a Contract Bid Item in the Bid Proposal Form or specified as part of the lump sum in the Contract Documents, the amount shall include full compensation for furnishing the labor, materials, tools, equipment and incidentals for all of the Work involved in mobilization in advance of construction operations. The CONTRACTOR shall submit to the ENGINEER for approval the Contract Price Breakdown with the amount established for mobilization.

B. The CONTRACTOR shall submit to the INSPECTOR for approval a breakdown of the amount established for mobilization. Total payment (100%) for obtaining insurance and bonds will be made upon proof of payment for those items. The payment for all other items of mobilization will be made when those items of mobilization have been completed and as specified below:

1. When the monthly partial payment estimate of the amount earned, not including the amount earned for mobilization, is five percent (5%) or more of the original Contract amount, the total amount earned for mobilization may be up to fifty percent (50%) of the Contract item price for mobilization. This amount will be included in the said estimate for payment.

2. When the monthly partial payment estimate of the amount earned, not including the amount earned for mobilization, is ten percent (10%) or more of the original Contract amount, the total amount earned for mobilization may be up to seventy-five (75%) of the Contract item price for mobilization. This amount will be included in the said estimate for payment.

3. When the monthly partial payment estimate of the amount earned, not including the amount earned for mobilization, is twenty percent (20%) or more of the original Contract amount, the total amount earned for mobilization may be up to ninety-five percent (95%) of the Contract item price for mobilization. This amount will be included in the said estimate for payment.

4. When the monthly partial payment estimate of the amount earned, not including the amount earned for mobilization, is fifty percent (50%) or more of the original Contract amount, the total amount earned for mobilization may be up to one hundred percent (100%) of the Contract item price for mobilization. This amount will be included in the said estimate for payment.

C. The adjustment provisions in CHANGE ORDERS of these GENERAL REQUIREMENTS, and the retention of funds provisions in this Section, shall not apply to the Contract lump sum item for Mobilization.

D. When other Contract items are adjusted as provided in CHANGE ORDERS of these GENERAL REQUIREMENTS, if the costs applicable to such item of work include mobilization costs, such mobilization costs will be deemed to have been recovered by the CONTRACTOR by the payments made for mobilization and will be excluded from consideration in determining compensation under said Article.

E. When the Contract does not include a Contract pay item for mobilization as specified above, full compensation for any necessary mobilization required shall be considered as included in the prices paid for the various Contract items of work involved and no additional compensation will be allowed.

1.2 PAYMENT FOR PERMITS

A. The Contractor shall obtain and pay for all permits necessary for performance of the Work in accordance with the provisions of PERMITS AND CONSTRUCTION EASEMENTS of the GENERAL CONDITIONS. If the Bid Proposal provides an allowance for Permits, the CONTRACTOR shall include in the Bid the amount stipulated under PERMITS in the SCHEDULE OF WORK AND PRICES in the Bid Proposal as an allowance for the costs of all required permits. Costs shall be limited to the actual fees paid to the agencies and will be reimbursed based on original receipts only and no overhead or profit shall be added to the cost of the permits. The CONTRACTOR shall deliver to the ENGINEER with each permit the original receipt. After all permits have been obtained and delivered, the actual costs of all permits shall be reviewed by the CONTRACTOR and the ENGINEER. If the total costs differ from the amount set forth in the SCHEDULE OF WORK AND PRICES, the Contract Price shall be adjusted by a Change Order for the difference between the total actual costs and the amount included in the Bid, as an additional amount due the CONTRACTOR or a credit to the CITY, as appropriate.

1.3 MONTHLY PROGRESS PAYMENTS

A. General:

1. The quantities listed in the Bid schedule will not govern final payment. Payment to the CONTRACTOR will be made only for actual quantities of Contract items constructed in accordance with the Plans and Specifications. Upon completion of construction, if the actual quantities show either an increase or decrease from the quantities given in the Bid schedule, the Contract Unit Prices will prevail subject to the provisions of CHANGE ORDERS of these GENERAL REQUIREMENTS.

2. The unit and/or lump sum prices to be paid shall be full compensation for the items of work and all appurtenant work, including furnishing all materials, labor, equipment, tools, and incidentals.

3. Payment will not be made for materials wasted or disposed of in a manner not called for under the Contract. This includes rejected material not unloaded from vehicles, material rejected after it has been placed, and material placed outside of the Plan lines. No compensation will be allowed for disposing of rejected or excess material.

4. Payment for work performed or materials furnished under an Assessment Act Contract will be made as provided in particular proceedings or legislative act under which such Contract was awarded.

5. Whenever any portion of the Work is performed by the CITY at the CONTRACTOR'S request, the cost thereof shall be charged against the CONTRACTOR, and may be deducted from any amount due or becoming due from the CITY.

6. Whenever immediate action is required to prevent injury, death, or property damage, and precautions which are the CONTRACTOR'S responsibility have not been taken and are not reasonably expected to be taken, the CITY may, after reasonable attempt to notify the CONTRACTOR, cause such precautions to be taken and shall charge the cost thereof against the CONTRACTOR, or may deduct such cost from any amount due or becoming due from the CITY. CITY action or inaction under such circumstances shall not be construed as relieving the CONTRACTOR or its Surety from liability.

7. Guarantee periods shall not be affected by any payment but shall commence on the date equipment or material is placed into service at the direction of the CITY. In the event such items are not placed into service, prior to partial or final completion of the project, the guarantee period will commence on the date of completion.

8. If the Contract comprises two or more major units of work readily separable and divisible, and for which separate prices are stipulated in the Contract, the CONTRACTOR may make separate requests for progress payment on each such unit, and the CITY will make such progress payments, statement of completion, acceptance, retention, and final payment in accordance with the procedure specified above for the entire Contract.

9. The making of any payment to the CONTRACTOR under this Contract shall not relieve the CONTRACTOR of any obligations hereunder. The CONTRACTOR is obligated to complete the Contract in its entirety and to deliver to the CITY such acceptably completed work, finished product or structure as is specified in the Contract, at the time or times specified. Until this Contract is fully performed by the CONTRACTOR, and the Work, product, or structure produced thereby is accepted by the CITY, the CONTRACTOR shall also be obligated to repair, replace, restore, or rebuild any fully or partially completed work or structure, or any materials or equipment required to be provided under the Contract which may be damaged, lost, stolen, or otherwise injured in any way. This particular obligation of the CONTRACTOR, with respect to any major unit of the type mentioned in this Section, will terminate upon the completion by the CONTRACTOR and acceptance by the CITY of such major unit.

B. Monthly Request for Payment:

1. Unless otherwise prescribed by law, three (3) working days prior to the last work day of each month, or other such date mutually agreed upon by the CONTRACTOR and the INSPECTOR, the CONTRACTOR shall prepare and submit to the INSPECTOR, an estimate of the cumulative amount and value of acceptable Work performed by the CONTRACTOR at the Jobsite up to that date. The value of the completed Work shall be based on the approved Schedule of Values in accordance with the provisions of SCHEDULE OF VALUES/CONTRACT PRICE BREAKDOWN of these GENERAL REQUIREMENTS. Said amount shall also include the value of all acceptable

materials and equipment for the Contract that have been delivered and suitably stored but not yet used in the Work, subject to the requirements of this Section.

2. The CONTRACTOR will be required to make all monthly requests for payment on the CITY'S Contract Payment Request Form. CONTRACTOR shall submit Contract Payment Request Form with the approved Payment Request estimate of work to the INSPECTOR. That form requires that the CONTRACTOR certify, under penalty of perjury, to the following:

   a. No workers were required or permitted to work more than eight (8) hours in any one calendar day, except in cases of emergency, and except as provided by law.
   b. Not less than the prevailing rates of wages, as set forth in the Contract for this Work, have been paid all laborers, workers, and mechanics employed to perform this Work.
   c. There were no substitutions of Subcontractors, no assignment or transferences of Subcontractors or Sub-Subcontractors, except as approved by the Board of Public Works.
   d. All of the provisions of Los Angeles Administrative Code, Section 10.8, pertaining to non-discrimination in employment have been complied with.

C. Payments for undelivered equipment, specifically manufactured equipment to be incorporated into the Work, excluding "off the shelf" or catalog items, will be made when all of the following conditions exist:

1. The equipment must be specifically designated in the Technical Specifications for partial payment prior to delivery,

2. The equipment to be specifically manufactured for the Project could neither be readily utilized on, nor diverted to, another job; and,

3. A fabrication period of more than six (6) months is anticipated.

D. On lump-sum Contracts the INSPECTOR'S estimate of the monthly payment due the CONTRACTOR is an estimate of work acceptably completed and will not be required to be made by strict measurement.

E. Upon verification and approval by the INSPECTOR, the progress payment estimate shall be forwarded to the Payment Section of the Bureau of Contract Administration for processing.

F. Payment to the CONTRACTOR shall be made within 30 days after an undisputed and properly submitted payment request is received from the CONTRACTOR by the Bureau of Contract Administration Payment Section.

G. The CITY shall retain a portion of the amount otherwise due to the CONTRACTOR, as follows:

1. Retention of five percent (5%) will be held on the original Contract value on each approved payment claim until the amount paid of the original Contract equals fifty percent (50%). The INSPECTOR may then, at its sole discretion, discontinue

further retention on the original Contract value for all subsequently approved payment claims.

2. At any time during the course of the Contract, the INSPECTOR may, at its sole discretion, reinstate the five percent (5%) retention.

3. In the event the Contract is terminated for CONTRACTOR default, any funds due the CONTRACTOR and retained by the CITY in accordance with these provisions, shall become the property of the CITY to the extent necessary to repay to the CITY any excess in the Contract Price above the cost of the Work completed at the time of termination. After issuance of Notice To Discontinue Work, no further payments will be made to the CONTRACTOR for the Work covered by the notice until completion of work and final settlement has been made.

H. Additional deductions will be made from each monthly payment request for amounts due the CITY as follows:

1. Equipment or materials furnished by the CITY.

2. Services rendered to the CONTRACTOR by the CITY.

3. Amounts due the CITY for liquidated damages under the terms of the Contract.

4. Amounts required to be deducted by federal, state, or local governmental authority or other provisions of these Contract Documents.

I. From the balance thus determined will be deducted the amount of all previous payments, and the remainder shall constitute the monthly payment due to the CONTRACTOR.

J. The monthly payments may be withheld or reduced, for the following reasons:

1. If the CONTRACTOR is not diligently or efficiently complying with the express intent of the Contract;

2. If there are unresolved Notices of Non-Compliance;

3. If Technical Manuals are not submitted;

4. If Record Drawings are not kept up to date;

5. If progress photographs are not submitted;

6. If construction schedules are not submitted in accordance with these General Requirements; or

7. If the Solid Waste Diversion and Disposal Report is not submitted with progress payment estimate.

8. Failure of the CONTRACTOR to maintain insurance as required by the CONTRACT.

9. Upon written request of the ENGINEER.

K. The CONTRACTOR shall promptly submit the following in response to requests by the INSPECTOR:

1. All information and records necessary to determine the cost of the Work for purposes of estimating monthly payment.

2. All itemized statements, in a form satisfactory to the INSPECTOR, of the actual cost of all acceptable materials delivered by the CONTRACTOR to the site.

L. The making of any payment to the CONTRACTOR shall not relieve the CONTRACTOR from Contractual obligations. These payments shall not be construed as the transfer of ownership of any equipment or materials to the CITY.

M. Responsibility of ownership shall remain with the CONTRACTOR who shall be obligated to store, protect, repair, replace, rebuild or otherwise restore any fully or partially completed work or structure for which payment has been made. The CONTRACTOR shall replace any materials or equipment required to be provided under the Contract which may be damaged, lost, stolen, or otherwise degraded in any way prior to acceptance of the Work under the Contract.

N. Escrow Account for Retention Payments:

1. Under Section 22300 of the Public Contract Code, the CONTRACTOR has the option to deposit securities with an Escrow Agent as a substitute for the CITY withholding the required five percent (5%) retention from progress payments to ensure performance of any contract entered into between the CITY and the CONTRACTOR. Provided adequate value of securities is on deposit with the Escrow Agent, retention payments are then made directly to the CONTRACTOR by the CITY. As an option, Section 22300 also permits the CONTRACTOR to have retention payments made directly to the Escrow Agent, with no requirement for the CONTRACTOR to deposit securities with the Escrow Agent. If the CONTRACTOR requests neither of the above alternatives, the retention funds will be retained by the CITY and invested by the City Treasurer, in which case, interest earned will accrue to the benefit of the CITY.

2. Under the terms of the Escrow agreement, the CONTRACTOR has the option to arrange to deposit securities up front for up to the full five percent (5%) of the total amount of the Contract **(Option "A")**, or to have the CITY make payments directly to the Escrow Agent for the amount the CITY withholds for the required retentions with no requirement for the CONTRACTOR to deposit securities in advance **(Option "B")**. These arrangements are set forth in the Escrow Agreement.

3. At the CONTRACTOR'S request, the Bureau of Accounting will provide the necessary paperwork to establish the Escrow Account. For information contact:

Ester Paras; Senior Accountant II
Ester.paras@lacity.org
(213) 978 -0927

1.4 PAYMENT FOR MATERIALS OR EQUIPMENT DELIVERED AND STORED ON THE JOBSITE

A. Materials and/or equipment are eligible for partial payment when delivered and stored at the Worksite as follows:

1. Each individual piece of the material or equipment must be valued at $5,000 minimum.

2. The materials and equipment are intended for permanent installation.

3. The materials or equipment are specifically delineated in the Contract, specially manufactured for this project and not readily useable on other projects.

4. The CONTRACTOR shall store the materials and equipment as required in STORAGE OF MATERIALS AND EQUIPMENT in these GENERAL REQUIREMENTS.

5. Living, perishable, degradable or standard stocked items are ineligible.

B. The partial payment is limited to the lesser of 1) Ninety-five percent (95%) of the invoice cost, or 2) The bid item amount less an estimate by the City for installation.

C. The CONTRACTOR shall include cost-loaded scheduling activities for items of material and equipment that the CONTRACTOR intends to request "Partial Payment for Materials or Equipment Delivered and Stored on the Job Site".

D. The CONTRACTOR shall provide all documentation necessary to establish the cost of such materials and equipment for the "Schedule of Values".

E. Prior to start of Work, the CONTRACTOR shall provide the INSPECTOR with a list of all materials or equipment proposed to receive partial payment under the provisions of this Article, along with its supplier, fabricator, or manufacturer.

F. Change orders and/or time extensions will not be issued for any costs or impacts related to compliance with this section, including documentation, special handling, or special storage.

1.5 PAYMENT FOR MATERIALS OR EQUIPMENT STORED OFF THE JOBSITE

A. Partial payment for materials or equipment stored off the Jobsite shall be subject to the following conditions:

1. Payment will not be made for any materials or equipment unless each individual piece of the material or equipment becomes a permanent part of the Work and has a value of more than $5,000.

2. The materials and/or equipment are required by the Specifications and are specifically manufactured for the Project and could not readily be utilized or diverted to another job.

3. No payment will be made for living or perishable plant material, or for degradable materials such as rock, sand, cement, or for reinforcing steel, miscellaneous piping, off the shelf and catalog items, or similar items, until they are incorporated into the Work.

4. Payment for the materials or equipment stored shall not exceed sixty percent (60%) of the invoice cost of the materials or equipment. Percent of the invoice paid shall be at the discretion of the CITY. The amount paid shall not exceed the total amount of the Bid item less an amount estimated for installation.

B. The CONTRACTOR shall include cost loaded activities for the materials and equipment, for which payment will be requested, in the Schedule of Values. The CONTRACTOR shall provide all documentation necessary to establish the cost of the materials or equipment.

C. All suppliers, fabricators, or manufacturers who intend to furnish materials or equipment to the CITY must file a notice with the CITY in accordance with the State of California lien laws.

D. Each supplier, fabricator or manufacturer shall file a list, with the INSPECTOR, indicating the materials or equipment to be furnished to the Project. They shall also provide a notarized declaration from their company indicating the employees authorized to sign an unconditional release for the company. The persons signing the declaration and the unconditional release shall be identified by name and title.

E. Each request for payment shall include a notarized Unconditional Release that conforms to the California Civil Code for no less than 60% of the invoice cost of the materials or equipment. The release shall be signed by an authorized employee identified in the corporate declaration. The request shall include the suppliers invoice for the materials or equipment.

F. The CONTRACTOR shall store the materials and equipment as required in STORAGE OF MATERIALS AND EQUIPMENT of these GENERAL REQUIREMENTS, in a bonded warehouse or facility approved by the INSPECTOR. The storage site shall be located within fifty (50) miles of the geographic limits of the CITY. The materials and equipment shall be physically segregated from all other materials or equipment within the facility and shall be identified as being the "PROPERTY OF THE CITY OF LOS ANGELES". The CONTRACTOR shall exercise all measures necessary to ensure preservation of the quality, quantity, and fitness of such materials or equipment and shall perform the manufacturers' recommended maintenance of the materials or equipment. The CONTRACTOR shall inspect the materials and equipment and submit a monthly written report to the INSPECTOR listing all the equipment stored, results of their inspection, and the maintenance performed.

G. The CONTRACTOR shall grant the INSPECTOR and the ENGINEER access to the storage facility at any time and assist the INSPECTOR and the ENGINEER in conducting a full view, piece by piece, inventory of all such material or equipment.

H. The CONTRACTOR shall provide all additional insurance necessary to insure the materials or equipment against loss of damage. The insurance provided shall be provided as stated in INSURANCE of the GENERAL CONDITIONS. The insurance shall cover the material or equipment, while stored at the approved site, while in transit to the Jobsite, while being off-loaded at the site and until the material or equipment is incorporated into the Work and the CONTRACT is accepted by the BOARD.

I. The CONTRACTOR shall be responsible for any damage to, defects therein, mis-fabrication thereof, or loss of the materials or equipment.

J. The CONTRACTOR shall be responsible for any resulting project delays or consequential damages as if the CONTRACTOR were the owner of the material or equipment until it is incorporated in the Work and accepted by the CITY.

K. The CONTRACTOR shall absorb any and all cost incurred to meet the requirements of this article without modification in the Contract amount.

L. The CONTRACTOR shall present the storage arrangements in writing and sign a Security Agreement, which shall be submitted to the INSPECTOR for approval by the City Attorney. This agreement shall set forth the terms of ownership, storage and insurance necessary to insure the material or equipment against damage or loss.

1.6 FINAL PAYMENT

A. Final Payment of all monies owed the CONTRACTOR shall be made within 60 days of the date of Final Field Acceptance by the Final Inspector after deducting all prior payments and all amounts to be withheld under the provisions of the Contract, including the following items:

1. Liquidated damages, as applicable;

2. "Disputed Funds" including, but not limited to, the following:

a. Penalty and/or restitution for failure of the CONTRACTOR to pay prevailing wages as required by the contract.
b. Penalty for failure of the CONTRACTOR to receive approval of all Subcontractor(s) prior to said Subcontractor working on the project.
c. Penalty for failure of the contractor to receive approval for Subcontractor substitution(s).
d. Penalty for failure of the contractor to receive approval for a reduction in the dollar amount paid a bid-listed and/or approved Subcontractor;

3. Lien claims or Stop Notices filed on behalf of suppliers, Subcontractors, and labor performed in connection with the project; except, that upon submittal of a Stop Notice Release Bond issued by an approved Surety Company executed in favor of the CONTRACTOR, the CITY will release such portion of the retained funds to said CONTRACTOR that is being held solely to cover Stop Notice Claims.

B. No claim of the CONTRACTOR under this Article shall be allowed unless the CONTRACTOR has given the required written notice. Nor shall a claim by the CONTRACTOR for an equitable adjustment hereunder be allowed if asserted after final payment under this Contract.

C. The acceptance by the CONTRACTOR of final payment and retention shall release the CITY, its officers, agents, representatives, or employees, as representatives of the CITY, from all claims and all liability to the CONTRACTOR for all matter in connection with the Work and all acts of the CITY relating to or arising out of the Work.

END OF SECTION

THIS PAGE INTENTIONALLY LEFT BLANK

SECTION 01298
SCHEDULE OF VALUES / CONTRACT PRICE BREAKDOWN

1.1 THE REQUIREMENT

A. The Schedule of Values shall be used as a basis for determining progress payments on a lump sum contract or any designated lump sum bid item. The Schedule of Values shall be a schedule of cost loaded construction activities equal, in total, to the lump sum bid and shall be in such form and sufficient detail to correctly represent a reasonable apportionment of the lump sum. Prior to submitting an invoice for payment, the CONTRACTOR shall have submitted a detailed Schedule of Values and obtained approval from the INSPECTOR.

B. Each lump sum bid item on the Schedule of Work and Prices, as set forth in the Bid must be broken down separately. The breakdown of each lump sum bid item must cover the cost of construction required by the Drawings and Project Manual for that item. The sum of the values for the construction activities, within a bid item, must equal the total bid amount for that item. The breakdown shall include subcontract amounts which shall not deviate from the amounts submitted in the Bid Proposal. The CONTRACTOR shall provide certification from the Subcontractors certifying the subcontract amounts.

C. Each activity in the Schedule of Values shall delineate one construction activity. For example, the placement of concrete between construction joints, the construction of an electrical duct bank or pipeline between points A & B. The costing for each activity should include all costs for the labor and materials or equipment required to complete the activity. For example, concrete construction activities should include all costs for the forming, placing of reinforcement, placing concrete and curing. The cost for pipeline construction activities should include materials, equipment and installation including pipeline supports or thrust blocks. The excavation and backfill for a pipeline or structure may be separate activities. The Contract Price breakdown shall include the itemized costs for the plant establishment and any maintenance services to be performed before the final project acceptance is made. No non-construction activity shall be cost loaded.

D. The CONTRACTOR shall use cost loaded construction activities from the Construction Schedule as a Schedule of Values. Each construction activity shall be encoded to its bid item and a sort provided for each bid item totaling the cost loaded amount. The total of the Cost Loaded amounts for each bid item shall equal the amount bid for that item. The total of the Schedule of Values shall equal the current Contract value at all times. At any time during the progress of the Work of the Contract the INSPECTOR reserves the right to review the cost loading of the Schedules of Values and direct necessary revisions. When requested by the INSPECTOR, the CONTRACTOR shall provide all information necessary to substantiate the cost loading.

END OF SECTION

THIS PAGE INTENTIONALLY LEFT BLANK

SECTION 01311
PRECONSTRUCTION SAFETY CONFERENCE

1.1 THE REQUIREMENT

A. The CONTRACTOR's Project Manager, Project Engineer, Safety Coordinator and Superintendent(s) shall attend a Pre-Construction Safety Conference conducted by the INSPECTOR and the ENGINEER. The CONTRACTOR will be informed of the date, time, and location of the Pre-Construction Safety Conference by the ENGINEER. The Pre-Construction Safety Conference shall take place within twenty-one (21) calendar days after Notice of Award and prior to the start of any Work at the site. The CONTRACTOR shall select additional personnel from its field staff, vendors, suppliers, and manufacturers, and from every Subcontractor, at any tier, to attend the Pre-Construction Safety Conference.

B. The CONTRACTOR shall provide to the ENGINEER and the INSPECTOR, at the Pre-Construction Safety Conference, the following documents:

1. Injury and Illness Prevention Program (IIPP) which shall address site specific concerns and shall also Include the following, as a minimum:

    a. Occupational Injury and Illness Investigation and Reporting System, including a system for providing all injury reports to the INSPECTOR and the ENGINEER.
    b. Safety Inspection System.
    c. Hazard Communication Program.
    d. Methods of identifying hazards including a procedure for notifying the INSPECTOR and the ENGINEER when a hazard is identified.
    e. Training Documentation System.
    f. Safety Communication and Remediation Procedures.
    g. Making the CONTRACTOR's employees and all Subcontractors and supplier personnel aware of the biological health hazards due to working at a wastewater treatment or a pumping plant. As a minimum, this subject shall be a topic for the CONTRACTOR's weekly safety meetings at least once each quarter. See Attachments 01311-A1 through 01311-A4.
    h. Other specific safety activities which pertain to the Work.

2. During periods of Pandemic/Epidemic of infectious diseases, as declared by the local and/or State health officials, the Contractor may be required to modify his/her attendance to the Pre-Construction Safety Conference and all other meetings by teleconference.

    a. Following the guidelines from local and/or State health officials, the Contractor shall modify the IIPP to include these additional requirements:
        i. Personal Protective Equipment (PPE) for all workers.
        ii. Social distancing.
        iii. Hygiene maintenance.
        iv. Quarantine of infected workers and those who have come in contact.
        v. Testing requirements as prescribed by the State/Local health officials.
        vi. Any other requirements as prescribed by State/Local health officials as they become available.

b. Additionally, the Contractor shall follow these guidelines as required for construction inspection:
   i. Los Angeles Department of Building and Safety Announcement No. 5 "Covid-19 Safety Guidance for Construction Sites".
   ii. Bureau of Contract Administration Job Memorandum "Covid-19 Safety Guidelines for Construction Sites".

3. Identification of person(s) responsible for safety of this site, who will be assigned to the site during the performance of the work, for the CONTRACTOR and all Subcontractors at any tier.
4. Emergency Action and Fire Prevention Plan.

5. Hazardous Materials Procurement, Storage, Handling, Waste Control and Disposal Procedures.

   a. The CONTRACTOR's Lock Out/Tag Out, Confined Space Entry, Hazardous Materials/Waste Control and all other site-specific safety programs shall meet or exceed the Bureau of Sanitation's standards for this site. These standards are available to the CONTRACTOR upon request from the ENGINEER.

6. It shall be the CONTRACTOR's responsibility to assure that all field forces know and obey all safety and emergency procedures to be maintained at the job site. The CONTRACTOR shall further assure that a supervisor is present at all times during any field work who is knowledgeable of and responsible for the enforcement of the CONTRACTOR's required safety procedures.

END OF SECTION

(SEE ATTACHMENTS)

ATTACHMENTS TO SECTION 01311

Attachments to General Requirements Section 01311 consists of four (4) documents, as follows:

ATTACHMENT NUMBER	TITLE OF ATTACHMENT	NUMBER OF PAGES IN THIS ATTACHMENT
01311-A1	Biological Health Hazards to Wastewater Treatment Workers	2
01311-A2	HIV in Wastewater Not a Threat	2
01311-A3	Concerns and Sanitary Practices to Prevent Disease Transmission from Sludge, Sewage, and Plant Effluents	2
01311-A4	Comparison of the Major Forms of Hepatitis	1

Biological Health Hazards to Wastewater Treatment Workers

Municipal wastewater generally contains four major types of human pathogenic (disease causing) organisms: bacteria, viruses (Hepatitis A), protozoa, and helminths (parasitic worms) (EPA 1985).[4] These four disease types are classified as **waterborne** and originate in the human digestive tract.

Though highly diluted, **bloodborne** pathogens such as the Human Immuno deficiency Virus (HIV) is assumed to be present in wastewater from sources such as spent condoms or blood-stained cotton, bandages or sanitary napkins. Studies indicate that the risk of bloodborne pathogen transmission by wastewater appears to be minimal.[1] If good hygiene practices are observed, the risk is essentially zero.

Transmission of disease from wastewater to a host has four requirements:

1) An infectious agent must be present.

2) The infectious agent must be present in sufficient numbers to cause infection. (Since concentrations of pathogens vary in wastewater, it is safest to consider them sufficient to cause infection).

3) A susceptible host must be available (the wastewater worker).

4) An appropriate portal of entry (eyes, broken skin, mouth) into the host must exist or be created (USDHHS, 1990).[2]

The portal of entry could be one of the following:

1) Direct sewage splash in the mouth, eyes or open wound.

2) Inhalation or ingestion of wastewater aerosols. These aerosols may settle on any surface which could be transferred to the hands and later the mouth during eating, drinking or smoking.

3) Needle sticks to persons involved in cleaning settling tanks.

Of the four requirements for disease transmission, the only one that can be controlled with certainty is preventing a portal of entry of pathogens to the wastewater worker. This involves observing common sense hygiene practices such as:

1) A majority of infectious materials is carried on the hands. Wastewater workers are well advised to keep their fingers away from the nose, mouth, and eyes (no smoking or eating) until their hands have been thoroughly cleaned. Frequent hand washing should be a habit.

2) Wearing personal protective equipment such as gloves and protective clothing. Dust mist respirators are available for workers who desire to use them as an extra prevention measure to minimize inhalation of aerosols.

3) Keep wounds covered by sterile bandages and change bandages frequently to make certain that contamination is not becoming trapped underneath. Waterproof gloves may also be necessary.

The risk of disease transmission from wastewater to wastewater workers has been studied for some time. Some of the conclusions of these studies are presented below:
In general terms, the risk of disease transmission appears to be quite low for those who frequently encounter sewage (Clark et al., 1976).[1]

"Given what is known about the survivability of HIV, the concentrations of HIV in body fluids, the dilution of the waste stream, and the risk of infection by exposure to contaminated fluids, it appears unlikely that transmission of HIV could occur in a wastewater treatment setting."[1]

"Opportunities exist for wastewater treatment workers to be exposed to pathogenic bacteria, viruses, and parasites from biological aerosols or contact with contaminated materials and surfaces in the plant....However, the slightly increased risk of infection resulting from exposure to wastewater does not appear to translate into increased over disease incidence among wastewater treatment plant workers."[3]

1. Johnson, R.W., et al (1994) HIV and the Bloodborne Pathogen Regulation: implications for the wastewater industry. Water Environment Research Vol. 66 Pp. 684-691

2. EPA/625/R-92/013 Environmental Regulations and Technology: Control of Pathogens and Vector Attraction in Sewage Sludge. U.S.E.P.A. 1992 P5

3. Bitton, G. Wastewater Microbiology. Wily-Liss, N.Y. 77-100,247-256.

Additional references:

Casson, L.W., (May/June 1992) HIV survivability in wastewater. Water Environment Research. Pp. 213-215

Gover, N. HIV in Wastewater Not A Threat, Water Environment and Technology, (December 1993) P. 23

HIV in Wastewater Not a Threat

According to the Center for Disease Control (CDC) in Atlanta, Ga., wastewater contaminated with the Human Immunodeficiency Virus (HIV) poses virtually no risk to wastewater treatment plant operators. Because HIV is a blood-borne disease, the CDC does not consider the water-borne route a possibility for transmission.

The virus that causes Acquired Immune Deficiency Syndrome (AIDS) has been a hotly debated issue among wastewater treatment plant operators. Recent studies, including one conducted at the University of Pittsburgh in 1992, have indicated that the virus is stable in wastewater. But this Pittsburgh study, "HIV Survivability in Wastewater", (Water Environment Research, May-June 1992), concluded that, "HIV is fairly stable in wastewater for up to 12 hours but experiences a 2 to 3 log reduction in infectivity after 48 hours."

The problem arises, says a CDC source, when these studies conducted in a laboratory setting are compared with what happens in the real world or in wastewater. Such laboratory studies are of interest to the academic and scientific community because they provide insight into how a virus behaves, says the CDC. However, they do not reflect what happens in the natural environment.

As the CDC points out, these laboratory studies use high concentrations of the virus, in reality, a person infected with HIV has very low levels of the virus in his or her bloodstream. Unlike bacteria and fungi, HIV is unable to multiply outside a living host cell.

According to Jim Kreissi, environmental engineer with the EPA's Center for Environmental Research Information in Cincinnati, Ohio, "HIV is not shed in the feces of infected individuals, as is poliovirus and other enteric viruses. Its only means of getting into wastewater is by mixing of water with blood, semen, saliva, or tears prior to entering the sewer system. Therefore, concentrations of HIV in wastewater should be quite low".

To dilute levels of HIV that may be present in wastewater also would encounter a hostile environment, according to the CDC. They would be subject to hostile conditions, such as disinfectants and other chemicals, high concentrations of other microorganisms, and changes in temperature and pH. The number that would survive in wastewater therefore would be infinitesimally small.

However, the most significant obstacle to HIV infection--from any source--is how it enters the body. It must enter through the bloodstream. According to the CDC, the only recognized transmission mechanisms for HIV are needles, sexual intercourse, and mother-to-baby transmittal. "Theoretically, the only way you could get HIV infection from wastewater is if you were injected with rather large amount of it, which is hardly likely", says a CDC source.

"It is dangerous to assume that mere presence of the virus ensures it will cause disease", says the CDC source, "The disease is not transmitted by wastewater".

Other Pathogens May Pose Threats

While the risk of HIV transmission from wastewater is virtually nonexistent, there are a variety of other pathogens in wastewater that could pose a threat to treatment plant operators.

As with HIV, the most significant factor affecting the risk for infection is how a microorganism enter the body. Pathogens that enter through the nose and eyes, for example, may pose a risk to treatment plant operators.

Infection may occur when microorganisms become airborne when wastewater is agitated or sprayed. Pathogens then may be inhaled or may contact the eyes. Dirty hands also may result in the inadvertent pathogen transmission to the mouth or eyes.

While there is a risk of disease transmission from some pathogens found in wastewater, treatment plant operators can minimize the risks by following hygiene and first aid protocol, and by wearing suitable protective clothing.

--Nancy Gover, National Small Flows Clearinghouse, Morgantown, W.V.

CONCERNS AND SANITARY PRACTICES
TO PREVENT DISEASE TRANSMISSION
FROM SLUDGE, SEWAGE, AND PLANT EFFLUENTS

WHAT IS OF CONCERN

Sewage, sludge, and undisinfected plant effluents should be assumed to contain pathogenic organisms which can be transmitted by ingestion, contact with open wounds, or inhalation of contaminated aerosols.

Typical types of pathogens and examples known to be transmitted by sewage and sludge include:

Type of Agent	Disease
Virus	Infectious hepatitis, polio
bacteria	cholera, typhoid, salmonellosis, dysentery
protozoa	amoebic dysentery, giardiasis
intestinal worms	roundworms, pinworms, tapeworms

Some diseases can be transmitted through punctures in the skin. Bacteria may be covered over and trapped by flesh, creating an anaerobic environment for growth. Tetanus is the most common disease of this type.

WHAT IS NOT OF CONCERN

Sewage/sludge is not considered a mode of transmission for such diseases as cancer, herpes, gonorrhea, syphillus, legionnaires disease, and most other diseases not associated with the intestinal tract (mumps, measles, colds).

HIV virus could be present in sewage at low concentrations because of the potential discharge of blood or other bodily fluids from infected persons to the sewer system. However, the risk of infection from sewage is considered to be extremely low and no reported cases have ever been associated with sewage contact.

Sewage/sludge is odorous. However, odorous gases evolved from sewage/sludge, such as H_2S, and other gases such as CH_4 and CO_2, are not considered health hazards in well ventilated areas. However, in confined spaces and poorly ventilated spaces these gases can become toxic (in the case of H_2S) or result in low oxygen conditions (in the case of CH_4 and CO_2). Caution must be exercised when entering enclosed, unventilated or poorly ventilated areas such as sewers or maintenance holes.

Sewage/sludge does not contain volatile compounds or materials at concentrations that would cause health concerns for short term exposure by inhalation.

PROPER HYGIENE PRACTICES

Years of plant operation have shown that common sense and personal hygiene practices are effective in preventing disease among workers exposed to contaminated material such as sludge, sewage, or plant effluents.

It is important to avoid ingestion and contact with open wounds and sores.

Reasonable precautions should be taken to avoid unnecessary direct contact with contaminated material.

1) When working on equipment which has been contaminated, the equipment should first be hosed off using potable water if at all possible. Plant effluent should be used to hose-off sludge only if potable water is not available.

2) Rubber gloves should be used whenever possible when working on contaminated equipment or surfaces and should always be used if it is necessary to directly contact sewage or sludge.

3) Eye protection should be worn if there is danger of getting contaminated material in the eyes.

4) Work should be momentarily suspended in areas in which sludge is being hosed-down if there is a likelihood of direct contact with washing or overspray.

5) Smoking should not be allowed in operating areas because of the frequent hand-to-mouth contact.

6) Eating should not be allowed in operating areas.

7) Masks should be used if there is a risk of aerosols or droplets such as might occur if effluent is sprayed in the air. Face shields should be used if there is a risk of direct facial contact with a spray.

It is always good practice to wash your hands with soap and water before eating. This is often difficult on a construction site. However, if you should come in contact with contaminated material or work in a sewage or sludge processing area, it is very important that your hands be washed with strong soap and water, and fingernails scraped before eating. The type of soap is less important than thorough use of soap.

Open cuts, sores, or breaks in the skin should be protected against exposure. Remember, bandages are usually not waterproof.

Contaminated clothing should be kept separate from other household clothing and washed separately in hot water (not warm or cold) with detergent and chlorine bleach. Lysol Laundry Sanitizer or similar products can be used as a disinfectant substitute for chlorine bleach if color fading is a concern.

When a worker is exposed to heavy contamination, i.e. exposure over large areas of the body or soaked clothing, it is recommended that the worker shower and change clothing as soon as possible after the exposure, and before returning home. Visible contamination should be removed from the clothing before it is taken home.

Contaminated clothing should be washed per the above instructions before rewearing.

If a worker should ingest contaminated material or have his/her eyes contaminated, the worker should rinse out the mouth or eyes with potable water and be sent to the emergency hospital for treatment. Gamma globulin is often administered in such cases to reduce the risk of infection.

Reasonable caution and respect, but not fear, should be the guiding principles.

COMPARISON OF THE MAJOR FORMS OF HEPATITIS				
TYPE: **Also Known As:**	**HEPATITIS "A"** **Infectious Hepatitis**	**HEPATITIS "B"** **Serum Hepatitis**	**HEPATITIS "C"** **Non-A Non-B Hepatitis**	**HEPATITIS "D"** **Delta Hepatitis**
FEATURES:	Most common type. Seldom chronic. Usually mild. Contagious. Transmitted only by those who have active Hepatitis "A" Liver damage with necrosis and inflammation	Highly contagious. Transmitted by the ill and carriers. Mortality (1% - 4%) is higher than for Hepatitis A (<0.5%)	Non- "A" Non- "B" hepatitis. Similar to "A" May become chronic. Occasionally leads to liver failure. Can increase risk or cirrhosis. Contagious.	
CAUSATIONS:	Swallowing material that contains active hepatitis "A" virus, e.g. feces, contaminated food, water, objects. Anal & oral sex. Rarely blood transfusions.	Injection of body fluid that contains active hepatitis "B" virus. Body fluid that contains active hepatitis "B" virus entering broken skin or mucous membranes. Blood/body fluid contaminated objects. Oral, anal, and vaginal sex.	Injection of body fluid that contains active hepatitis "C" virus. Body fluid that contains active hepatitis "C" virus entering broken skin or mucous membranes. Blood/body fluid contaminated objects. Blood transfusions (rare). Oral, anal, and vaginal sex.	Similar to hepatitis "B"
PEOPLE AT RISK:	Workers exposed to wastewater. Healthcare workers. Sexual partners of people ill with hepatitis "A". Family members of people ill with hepatitis "A". Shellfish eaters	Healthcare workers. Sexual partners of people ill with hepatitis "B" virus. I.V. drug users. Sexually active (many partners).	Healthcare workers. Sexual partners of people ill with hepatitis "C" or (rarely) carriers of hepatitis "C". I.V. drug users. Sexually active (many partners).	Only occurs in people who also have hepatitis "B"
PREVENTION:	Careful hygiene (fecal-oral transmission). Routine hand washing after possible contact. Sexual fidelity or abstinence.	Universal Precautions. Routine hand washing after contact. Sexual fidelity or abstinence. Abstinence from I.V. drug use.	Universal Precautions	Similar to hepatitis "B".

SECTION 01312
PROJECT MEETINGS

PART 1 - GENERAL

1.1 DESCRIPTION

A. Work Included:

1. Required to enable orderly review during pre-installation conference and progress of Contracted Work, and to provide for systematic discussion of installation problems and other construction problems arisen, the ENGINEER will conduct project meetings throughout the construction period. Conform to the Pre-Construction Scheduling Conference and Project Schedule Review Meeting provisions in Section 01321 – CONTRACTOR'S CONSTRUCTION SCHEDULE AND REPORTS of the GENERAL REQUIREMENTS.

B. Related Work:

1. Documents affecting work of this Section include, but are not necessarily limited to, GENERAL CONDITIONS, DIVISION 1 - GENERAL REQUIREMENTS.

2. The CONTRACTOR'S relations with his Subcontractors and materials suppliers, and discussions relative thereto, are the CONTRACTOR'S responsibility and normally are not part of project meetings content.

3. Pretesting Procedural Conference in Section 01453 – SAMPLING, TESTING AND FABRICATION INSPECTION of the GENERAL REQUIREMENTS.

4. CONTRACTOR'S CONSTRUCTION SCHEDULE AND REPORTS in Section 01321 of the GENERAL REQUIREMENTS.

1.2 SUBMITTALS

A. Conform to provisions of Section 01330 – SHOP DRAWINGS**/**SUBMITTALS of GENERAL REQUIREMENTS.

B. Agenda Items:

1. To the maximum extent practicable, advise the ENGINEER at least twenty-four (24) hours in advance of project meetings regarding items to be added to the agenda or requesting the cancellation of any Meeting.

C. Minutes:

1. The ENGINEER will compile minutes of each project meeting and will furnish one copy to the CONTRACTOR**,** INSPECTOR, ENGINEER and all other involved parties.
2. Recipients of copies may make and distribute such other copies as they wish.
3. Special denotation mutually agreed by all parties shall be used in Meeting Minutes to identify old and new business, to distinguished new discussion/statement made in subsequent meeting from previous meetings, or any revision to any part of the minutes.

1.3 QUALITY ASSURANCE

A. For those persons designated by the CONTRACTOR to attend and participate in project meetings, provide required authority to commit the CONTRACTOR to solutions agreed upon in the project meetings. Refer to provisions indicated in Section 00302 - CONTRACTOR'S REPRESENTATIVE AT THE SITE of the GENERAL CONDITIONS.

PART 2 - PRODUCTS (NOT APPLICABLE)

PART 3 - EXECUTION

3.1 MEETING SCHEDULE

A. Except as noted below for Preconstruction Meeting, project meetings will be held weekly or as otherwise directed by the ENGINEER.

B. Coordinate as necessary to establish mutually acceptable schedule for additional meetings.

3.2 MEETING LOCATION

A. The ENGINEER will establish the meeting location. To the maximum extent practicable, meetings will be held in CONTRACTOR'S job office at the Jobsite.

3.3 PRECONSTRUCTION MEETING

A. Preconstruction Meeting will be scheduled to be held within fifteen (15) working days after the City has issued the Notice to Proceed.

1. Provide attendance by authorized representatives of the CONTRACTOR and major Subcontractors.
2. The ENGINEER will advise other interested parties.

B. Minimum Agenda: Data will be distributed and discussed on at least the following items.

1. Organizational arrangement of CONTRACTOR'S forces and personnel, and those of the subcontractors, and materials suppliers.
2. Organizational arrangement of the CITY'S forces and personnel, such as the User's Agency, Project Manager, Consultant, CITY'S Scheduler, CITY'S Abatement Consultant, Soil Engineer**,** CITY'S Surveyor, INSPECTOR and other authorized representatives.
3. Channels and procedures for communication.
4. Construction schedule, including sequence of critical work.
5. Staging Plan.
6. Contract Documents, including distribution of required copies of original Documents and revisions.
7. Processing of Shop Drawings and other data submitted to the ENGINEER for review.
8. Processing of Bulletin, addenda, field decisions, Requests for Information and Change Orders.
9. Rules and regulations governing performance of the Work.

10. Procedures for site security, Project quality control, housekeeping, and related matters.
11. It is the responsibility of the CONTRACTOR for Job Site Safety & First Aid, however, it shall be on the agenda.
12. Procedures to request air monitoring services, soil inspection, survey, etc. if specified, shall be provided by the CITY.
13. Emergency Information: The name, addresses, telephone and fax numbers of the CONTRACTOR, and Subcontractors, or their representatives, shall be filed with the ENGINEER prior to the start of Contracted Work.

3.4 PROJECT MEETINGS

A. Attendance:

1. To the maximum extent practicable, the Project Superintendent and other representatives who have full knowledge of the project and full authority to act for the CONTRACTOR shall represent the CONTRACTOR at Project Meetings throughout the progress of the Work. All representatives must conform to the provisions indicated in Section 00302 - CONTRACTOR'S REPRESENTATIVE AT THE SITE of the GENERAL CONDITIONS.
2. Subcontractors, materials suppliers, and others may be invited to attend these Project Meetings in which their aspect of the Work is involved.
3. CONTRACTOR may not cancel or be absent from any meeting without advanced approval from the ENGINEER. The CONTRACTOR must submit a written request with reason to the ENGINEER twenty-four (24) hours before the scheduled meeting. If approved, the CONTRACTOR shall notify all parties of the cancellation.

B. Minimum Agenda:

1. Review, revise as necessary, and approve minutes of previous meeting.
2. Review progress of the Work since last meeting. Review actual starts and finish dates of activities.
3. Review status (total complete and outstanding) of submittal for approval, Request-for-Information and Change Orders.
4. Identify old and new problems, which impede planned progress**,** identify responsible party for the follow-up actions. Mutually agree to a common solution and date of correction.
5. Develop corrective measures and procedures to regain lost time on the planned schedule.
6. Review Weekly Progress Reports including the forecasts as required in Section 01321 – CONTRACTOR'S CONSTRUCTION SCHEDULE AND REPORTS of the GENERAL REQUIREMENTS**.**
7. Status of Record drawings and the Record Project Manual.
8. Jobsite Walk-Through. Record all discussion and follow-up actions.
9. Any Jobsite health and/or accident or safety issues.

C. Revisions to Minutes:

1. Unless published minutes are challenged in writing prior to the next regularly scheduled progress meeting, they will be accepted as properly stating the activities and decisions of the meeting.
2. Persons challenging published minutes shall reproduce and distribute copies of the challenge to all indicated recipients of the particular set of minutes.

3. Challenge to minutes shall be settled as priority portion of "old business" at the next regularly scheduled meeting.

3.5 SITE MEETINGS

A. Required when necessary to enable orderly review and discussion of site conditions and problems requiring solution during the progress of the contracted work. Notify the ENGINEER of the need for additional site meetings as early as possible to resolve the problem without any impact to the Project Schedule.

B. Provide necessary labor, tools, and equipment such as shoring, scaffolding, ladder, etc. to gain access to the site.

C. CONTRACTOR or CONTRACTOR'S authorized representative shall be always present.

D. All discussion and follow-up actions shall be recorded by ENGINEER and the minutes shall be distributed at the next meeting or at the earliest time.

END OF SECTION

SECTION 01313
WORK BY CITY OR OTHERS

1.1 THE REQUIREMENT

A. The CONTRACTOR shall be responsible for ascertaining the nature and extent of any simultaneous, collateral, and essential work by others. The CITY, its employees and contractors, and others, shall have the right to operate within or adjacent to the worksite to perform such work.

B. The CITY, the CONTRACTOR, their employees, Subcontractors, and others, shall coordinate their operations and cooperate to hold interference to a minimum.

C. The CONTRACTOR shall include in its Bid and schedule all costs and time involved as a result of coordinating its work with others. The CONTRACTOR shall not be entitled to additional compensation from the CITY for damages resulting from such simultaneous, collateral, and essential work. The CONTRACTOR'S coordinating efforts shall include redeployment of his work forces to other parts of the Work.

D. Should the CONTRACTOR be delayed by the CITY, and such delay could not reasonably have been foreseen and prevented by the CONTRACTOR, the ENGINEER will determine the extent of the delay, the effect of the delay on the project as a whole, and any commensurate extension of time.

E. The CONTRACTOR is required to notify affected CITY offices of Work to be done as specified in the following table:

Item	Office of LADOT to be notified	Cost to be borne by	Required Notice (working days)
Work on signal – controlled intersection	Traffic Signal Inspector: Central Area: (213) 485-1071 Western Area: (213) 485-6834 Valley Area: (818) 779-9433 ATSAC Project Engineer: (213) 972-8664	Contractor	3
Traffic Signal and Interconnect damage	Signal Superintendent: Daytime: (213) 473-8465 After Hours: (818) 374-4823		mmediate
Parking meter damage	Parking Meter Supervisor: (213) 473-0644		
Parking meter removal and replacement	Parking Meter Planning Supervisor: (213) 473-0644	City**	5
Material and labor by LADOT	For Scheduling of: Sign/Striping: (213) 485-9331 Signal: (213) 485-6818		
Traffic Sign removal, relocation and replacement	Appropriate District Transportation Engineer*:		
Parking restrictions, changes relating to temporary striping	Central District: (213) 972-4990		10
Final traffic striping and pavement marking	East Valley District: (818) 374-4688	Contractor	5
Temporary Traffic Control Plan	Hollywood District: (323) 957-6843		30
Temporary striping installation mark out	West Valley District: (818) 774-4306		2
Offsite Detour Signs	Western District: (310) 575-8138 Southern District: (310) 732-4599		5
Placement of temporary "No Parking" signs	Special Traffic Control Section: (213) 485-2298		4

* For B-Permit projects, notify citywide investigations (213) 972-8687.

** On B-Permit projects, the costs shall be charged to the permittee as required by Section 62.110 of the Los Angeles Municipal Code.

END OF SECTION

SECTION 01321
CONTRACTOR'S CONSTRUCTION SCHEDULE AND REPORTS

1.1 THE REQUIREMENT

A. Progress of the Work:

1. It is expressly understood and agreed that the time of beginning, the rate of progress, and the time of completion of the Work are of the essence of this Contract. The Work shall be executed with such progress as required to prevent any delay to other CONTRACTORS that may be working on other contracts at the site, the Contract milestones, and the general completion of the Contract.

B. CONTRACTOR'S Construction Scheduler:

1. The CONTRACTOR shall continuously employ or retain the services of a Construction Scheduler. The Construction Scheduler shall have at least three (3) years of verifiable experience as the person primarily responsible for preparing and maintaining detailed project schedules on projects of the same or similar size and nature as this project. The Construction Scheduler is required to attend all meetings pertaining to scheduling and progress of the Work. If the Construction Scheduler leaves employment of the CONTRACTOR, the CONTRACTOR must fulfill the requirements of B.2 a and b within thirty (30) days.

2. Within five (5) calendar days after the Notice of Award the CONTRACTOR shall provide a statement to the ENGINEER with the following:

   a. Identification, qualifications, and experience of the CONTRACTOR'S Construction Scheduler and all other members of the CONTRACTOR'S scheduling staff.
   b. References of not less than two (2) previous projects on which the CONTRACTOR'S Construction Scheduler has utilized CPM scheduling.
   (As used in this Section, "days" mean consecutive calendar days unless otherwise noted.)

The ENGINEER and the INSPECTOR reserve the right to disapprove any scheduling candidate or scheduling system proposed for the project. The ENGINEER and the INSPECTOR reserve the right to remove, without rights to work on the project, any member of the CONTRACTOR'S scheduling staff, that is, in the ENGINEER'S or INSPECTOR'S opinion, incompetent in scheduling.

C. General:

1. Schedule Methodology:
   The scheduling method to be used shall be a Critical Path Method schedule in the form of an activity on node Precedence Diagram Network (PDN) with capabilities of identifying the critical path. The principles and definitions of the terms used herein shall be as set forth in the Associated General CONTRACTOR'S publication "CPM in Construction", latest edition. To the extent there are any conflicts between the Associated General CONTRACTOR'S publication and the Specifications, the Specifications shall govern.

2. Work Breakdown Structure:

   a. The CONTRACTOR shall submit to the ENGINEER for approval, at the Preconstruction Scheduling Conference, the following:

      (1) A Work breakdown structure.
      (2) The associated alphanumeric coding structure to implement the Work breakdown structure.
      (3) The activity identification system for labeling all Work activities.

3. The first code field shall designate the bid item. The second code field shall identify the type of activity. (Types of activities shall be defined as "submittal", "review/approval", "procurement/fabrication", "delivery", and "construction/installation" or "Change Order".) The third code field shall identify which Specification section the activity shall be paid under. The fourth code field shall identify who is responsible to perform the activity (i.e., CONTRACTOR, Subcontractor(s), Supplier, etc.). The fifth code field shall identify the area being worked in or the facility, if appropriate. The sixth code field shall identify the construction phase or project element (if phasing of Work or project elements are identified in the Contract.) All Change Orders and Notices of Non-Compliance shall be included as separate code fields.
4. Scheduling System:
   The CONTRACTOR shall use Primavera P6 (latest edition) and a hardware system commensurate with the size of the program. This shall be referred to as the Scheduling System. The Scheduling System shall be capable of handling, processing, printing, and plotting data to satisfy all requirements of this Section.

D. Preconstruction Scheduling Conference:

1. The ENGINEER will schedule and conduct a Preconstruction Scheduling Conference with the CONTRACTOR'S Project Manager and Construction Scheduler within seven (7) calendar days after Notice of Award, to commence development of the required Schedule. At this meeting, the requirements of this Section, as they apply to the Contract, will be reviewed with the CONTRACTOR. The CONTRACTOR shall be prepared to review and discuss its methodology for developing the Schedule, its proposed sequence of operations, and cost, manpower, and equipment loading methodology.

   The Contractor shall include the effects of adverse weather in the Schedule in terms of working days (wds). The number of wds, Monday through Friday, excluding any day designated as a holiday by the City or in a Master Labor Agreement binding the Contractor, of normal adverse weather per month is as follows: January-3 wds, February-2 wds, March-3 wds, April-1 wd, October-1 wd, November-2 wds, December-2 wds. Unusually severe weather (see GC 00401 – Unavoidable Delay) is defined as the number of working days over what is normal adverse weather, as defined in the previous sentence. For partial months, the aforementioned numbers shall be prorated and rounded to the nearest whole number. There shall be no extension of time for adverse weather unless the Contractor is prevented from working during the first five (5) hours of a workday with at least sixty percent (60%) of the normal work force on more days per month than listed above. Even if there is unusually severe weather, a non-compensable extension of time will not be granted unless the other conditions required by GC 00401 are met, including negative impact to the critical path and delay beyond the current Contract Completion Date.

E. CONTRACTOR'S Construction Schedule:

1. CONTRACTOR'S Preliminary Schedule:

a. Within fifteen (15) calendar days after the Preconstruction Scheduling Conference, the CONTRACTOR shall submit to the ENGINEER the detailed plan of operations for the first ninety (90) calendar days of Work after Notice to Proceed, as well as a general approach for the remainder of the Work. The initial submittal of the Preliminary Schedule shall include the time scaled network diagram covering at least the first 90 days after Notice to Proceed. The network diagram shall be based on the "early" schedule dates. The network diagram shall list activity I.D. number, description, original duration and early dates. The submittal shall include a predecessor/successor report which matches the network diagram. The predecessor/successor report (sorted by activity ID) shall list (as a minimum) activity ID number, original duration, description, early dates and detailed predecessor/successor listing. The Preliminary Schedule submittal shall include electronic files uploaded to e2020 containing the CPM file matching the network diagram and predecessor/successor report. Any resubmittals of the Preliminary Schedule shall be the same detail and quantity as the initial submittal.

b. The ENGINEER, the INSPECTOR, and the CONTRACTOR shall meet within seven (7) calendar days after submittal of the Preliminary Schedule to review and make any necessary adjustments or revisions. The Preliminary Schedule, when revised, will represent the CONTRACTOR'S planned means, methods, and sequences for performance of the Work during the first ninety (90) calendar days after Notice to Proceed and is to be incorporated as the first ninety (90) calendar days of the CONTRACTOR'S Construction Baseline Schedule (the Schedule).

c. The CONTRACTOR shall submit the revised Preliminary Schedule within seven (7) calendar days after the meeting, for approval by the ENGINEER and the INSPECTOR.

d. At the same time, and as part of the submittal of the Preliminary Schedule, the CONTRACTOR shall submit to the ENGINEER and the INSPECTOR, for approval, a schedule of manpower and costs assigned to each activity on the Preliminary Schedule. Costs assigned will generally conform to the CONTRACTOR'S bid item unit prices and such lump sum bid item breakdowns as the INSPECTOR shall approve. The schedule of manpower and costs shall be realistic and level so as to not have any unusual manpower requirements.

e. The resultant Preliminary Schedule, when approved by the ENGINEER and the INSPECTOR, shall be the sole basis of partial or progress payments made for Work performed during the first ninety (90) calendar days after Notice to Proceed.

f. Submittal and approval of the Preliminary Schedule is a condition precedent to the issuance and payment of progress payments. Therefore, no progress payments will be made until the Preliminary Schedule has been approved by the ENGINEER and the INSPECTOR.

g. The Preliminary Schedule shall be updated monthly during the first ninety (90) calendar days after Notice to Proceed as a part of the payment application process. All appropriate reports and network diagrams required by H of this Section shall be submitted, as agreed upon between the ENGINEER, the INSPECTOR, and the CONTRACTOR.

2. CONTRACTOR'S Construction Baseline Schedule:

a. Fifteen (15) calendar days after approval of the Preliminary Schedule, the CONTRACTOR shall provide to the ENGINEER an update on the progress in the development of the Schedule. The CONTRACTOR shall prepare and submit to the ENGINEER the Contractor's Construction Baseline Schedule (the Schedule) within forty-five (45) calendar days after approval of the Preliminary Schedule.

b. The Schedule shall show the sequence and interdependence of activities required for complete performance of the Work, beginning with the date of the Notice to Proceed and concluding with the Contract Completion Date based on the completion time (calendar days) allowed in the Contract.

c. Pursuant to the float sharing requirements of the Contract, use of float suppression techniques such as preferential sequencing, special lead/lag logic restraints, extended activity times or imposed dates shall be cause for rejection of the Schedule and any revisions or updates. The use of float time disclosed or implied by the use of alternative float suppression techniques shall be shared as directed by the ENGINEER.

d. If the CONTRACTOR submits a Baseline Schedule showing completion of the Work more than thirty (30) calendar days in advance of the Contract Completion Date, the Schedule shall show the time between the early completion date and the current Contract Completion Date as "project float". The CONTRACTOR agrees that the ENGINEER may, at no cost to the CITY, decrease the Contract duration by issuance of a Change Order which will change the appropriate Milestone Date(s) and the Contract Completion Date to the completion date reflected on the Schedule. Any approved Schedule, revision, or update having an early completion date shall show the time between the early completion date and the current Contract Completion Date as "project float".

e. The ENGINEER will review and make comments on the Schedule. Meetings will be held between the ENGINEER, the CONTRACTOR, and all Subcontractors and Suppliers whom the CONTRACTOR may desire to invite or whom the ENGINEER may request be present.

f. Comments made by the ENGINEER on the Schedule, during review, will not relieve the CONTRACTOR from compliance with requirements of the Contract Documents. To the extent that there are any conflicts between

the approved Schedule and the requirements of the Contract Documents, the Contract Documents shall govern.

g. If requested by the ENGINEER at any time during the project, the CONTRACTOR shall provide highly detailed, a short-term schedule for specific crucial items (work around, start up, etc.).

F. Network Details:

1. The Schedule shall include time scaled network diagrams, based on calendar days, as well as computer tabulations. It shall be constructed to show the order in which the CONTRACTOR proposes to carry out the Work, to indicate restrictions of access and to show availability of Work areas, and availability and use of manpower, materials and equipment. The CONTRACTOR shall utilize the Schedule in planning, scheduling, coordinating, and performing the Work under the Contract (including all activities of Subcontractors, equipment vendors, and Suppliers). The CONTRACTOR will provide the ENGINEER with written confirmation of the concurrence of all major trade Subcontractors and Suppliers with the Schedule. (The term "major Subcontractors and Suppliers" as used in this Section, shall include any Subcontractor or Supplier with five (5) percent or more of the value of the Contract.) The logic shall be determined by which activity must be completed before a successor can start; maximum concurrent work; and manpower or equipment constraints which prevent concurrent work.

2. The Schedule shall provide the ENGINEER with a tool to monitor and follow the progress of all phases of the Work. The Schedule submitted to the ENGINEER shall comply with all limits imposed by the scope of Work, with all contractually specified intermediate milestone and completion dates, and with all constraints, restraints or sequences included in the Contract. The degree of detail shall include factors to the satisfaction of the ENGINEER, including, but not limited to:

a. Physical breakdown of the project.

b. Contract milestones and completion dates, substantial completion dates, constraints, restraints, sequences of Work shown in the Contract, the planned substantial completion date, and the final completion date.

c. Type of Work to be performed, the sequences, and the labor trades involved.

d. All purchases, submittals, submittal reviews, manufacturing, tests, delivery, and installation activities for all major materials and equipment, and a separate list of all major material items or items of equipment for which the CONTRACTOR intends to seek payment prior to installation.

e. Deliveries of CITY furnished equipment and/or materials in accordance with the dates or schedule windows of such items set forth in the Contract or furnished by the ENGINEER, or items to be salvaged and delivered to the CITY.

f. Preparation, submittal and approval of Shop and/or Working Drawings and material samples showing a thirty (30) day minimum time specified for the ENGINEER'S review of normal or routine submittals and a forty five (45) day review time for all major submittals, so identified in the

technical specifications, and the same time frame shall be allowed for at least one (1) resubmittal on all major submittals so identified in the Contract Documents.

g. Approvals required by regulatory agencies or other third parties notifications to utility companies, and request of services.

h. Plans for all subcontract Work, concrete placement sequence, structural steel, plumbing, heat, ventilation, air conditioning, electrical, etc.

i. Assignment of responsibility for performing specific activities, notifications to utility companies and request of services.

j. Access to and availability of Work areas including all anticipated plant shutdowns, if applicable.

k. Identification of interfaces and dependencies with preceding, concurrent and follow on CONTRACTORS and utilities as shown on the Plans or called out in the Specifications.

l. Resource loading for cost, manpower, material, and equipment.

m. Actual tests by the CONTRACTOR and the CITY, submission of test reports, and approval of test results.

n. All start up, testing, training, and assistance required under the Contract.

o. Planning for phased or total takeover by the CITY.

p. Punchlist and final cleanup.

q. Identification of any manpower, material, or equipment restrictions, as well as any activity requiring unusual shift work, such as two shifts, six (6) day weeks, specified overtime, or work at times other than regular days or hours, shall be clearly identified in the Schedule.

3. The activities included in the Schedule shall be analyzed in detail to determine activity durations in units of project working days. Durations shall be based on the labor, equipment, and materials required to perform each activity on a normal Workday basis. No on-site activity shall have a duration over fifteen (15) working days except non construction activities such as submittals, submittal reviews, procurement and delivery of materials or equipment, and concrete curing. Only on-site construction activities will be shown in their resource loaded state to reflect cost, manpower, materials and equipment except for those activities specifically identified under 1.1F.2d of this Section. The manpower and equipment, by item designation, shall be shown for each construction activity for the network on a tabular listing, and in information furnished in accordance with O and P of this Section.

4. Critical or near critical paths resulting from the use of manpower or equipment restraints shall be kept to a minimum. Near critical paths shall be defined as those paths having fifteen (15) working days or less of total float at the time of initial submission. Restraints related to resource loading must be identified as "For resource loading only".

5. The estimated cost to perform each work activity shall be noted for each activity in the network on a tabular listing. The sum of the costs assigned to all activities shall equal the Contract value. No activity costs shall be assigned to submittals or submittal reviews. The accepted cost loaded Project Schedule shall constitute the Schedule of Values in accordance with the SCHEDULE OF VALUES / CONTRACT PRICE BREAKDOWN of these GENERAL REQUIREMENTS, from which monthly progress payments will be made in accordance with the provisions of PARTIAL PAYMENTS in these GENERAL REQUIREMENTS. Acceptance of the Cost Loaded Schedule by the CITY does not relieve the CONTRACTOR'S responsibility to submit any cost information or data as requested by the ENGINEER for verification of cost.

6. The network diagram shall be prepared on (E) size sheets (28 inches by 40 inches), shall have a title block in the lower right hand corner, and a timeline on each page. Exceptions to the size of the network sheets and the use of computer graphics to generate the networks shall be subject to the approval of the ENGINEER.

7. All networks shall be drafted time scaled to show a continuous flow of information from left to right. The primary path(s) of criticality shall be clearly and graphically identified on the network(s).

G. Schedule Reports:

1. The Schedule submitted to the ENGINEER shall include the time scaled network diagram. Network diagrams shall be based on early start and early finish dates of activities shown. The network diagrams submitted to the ENGINEER shall also be accompanied by a computer generated mathematical analysis for each activity included in the Schedule. Such mathematical analysis shall be submitted to the ENGINEER and shall include at a minimum, the following:

   a. A list of all activities sorted by Activity I.D. Number with predecessor and successor activity numbers and descriptions.

   b. Activity number and description.

   c. Activity code(s).

   d. Schedule and actual/remaining duration for each activity.

   e. Earliest start date (by calendar date).

   f. Earliest finish date (by calendar date).

   g. Actual start date (by calendar date).

   h. Actual finish date (by calendar date).

   i. Latest start date (by calendar date).

   j. Latest finish date (by calendar date).

   k. Float in work days.

l. Monetary value and cost-to-date of each activity.

m. Percentage of activity complete and remaining duration for incomplete activities.

n. Cumulative value of Work completed based on the CONTRACTOR'S reported portion of activities complete and accepted.

o. Imposed constraints.

2. The following printed computer outputs shall be required as part of the Schedule submittal and each revision or update thereafter as a condition precedent to receipt of progress payments:

a. Activity listing sorted by I.D. number showing predecessor and successor activities in numerical order, with original and remaining duration, early start, early completion, late start, late completion and total float.

b. A sublisting of materials and equipment sorted by Specification Section number. The sublisting of materials and equipment shall include the following activities: preparation of Shop Drawings, submittal to the ENGINEER, review by the ENGINEER, and fabrication, testing, and/or delivery of material and equipment which shall be interfaced with the earliest start date that the material or equipment is to be installed on the project.

c. Activity sort(s) by organizational responsibility, including submittals to the ENGINEER for all major items or material and equipment, the number of shifts, crew sizes of each craft and construction equipment to accomplish the activity.

3. Outputs 1 and 2, above, shall show all activities, including restraints, for the duration of the project.

H. Approval of the Baseline Schedule:

1. The Schedule network diagram and computer tabulations, the Cash Flow Projection, and the Manpower and Equipment Requirements Forecast shall be submitted to the ENGINEER for approval on e2020:

a. The Network Diagram and Master Bar Chart Summary Schedule.
b. Computer tabulations, Predecessor/Successor Report.
c. Manpower Requirements.
d. Cash Flow Projection.
e. All required reports specified in F and G of this Section.
f. Written confirmation of concurrence of all major trade Subcontractors and Suppliers.

2. Approval Process:

a. The ENGINEER shall approve or disapprove, in writing, the CONTRACTOR'S submission within twenty-one (21) calendar days after receipt of all required information. The Schedule, once approved, becomes the Baseline Schedule which shall be used for monitoring and

evaluating all facets of Contract performance including, but not limited to, progress, changes, and delays.

b. The CONTRACTOR, the CONTRACTOR'S Construction Scheduler, and those major trade Subcontractors and Suppliers, as required by the ENGINEER, shall be required to participate in all meetings necessary to reach mutual agreement and approval of the Baseline Schedule, the Manpower Requirements Forecast, and the Cash Flow Projection.

c. The CONTRACTOR shall revise the Baseline Schedule, as required by the ENGINEER, to reflect project construction. If any of the required submissions are returned to the CONTRACTOR for corrections or revisions, they shall be resubmitted along with a new CD and a hard copy listing of each change (Claim Digger report) for approval within seven (7) calendar days after receipt. Resubmittals shall be as required in H.1 and H.2 of this Section. Review and response by the ENGINEER shall be given within seven (7) calendar days after receipt of each new submission.

d. Should the Baseline Schedule, submitted for approval, show variances from the requirements of the Contract, the CONTRACTOR shall make specific mention of such variations in the letter of transmittal, in order that, if accepted, proper adjustments to the Baseline Schedule can be made. Otherwise, the CONTRACTOR will not be relieved of the responsibility for executing the Work in strict accordance with the requirements of the Contract Documents.

e. Submittal and approval of the Baseline Schedule, the Manpower Requirements Forecast, the Cash Flow Projection, major trade Subcontractor and Supplier confirmation in writing, or CD(s), within the time prescribed, or revisions thereof within the required time, is a condition precedent to the issuance and payment of progress payments.

f. Failure of the CONTRACTOR to submit the Baseline Schedule, or any required resubmittals, in a timely, accurate manner and in accordance with the requirements of this Section will result in costs to the CITY which are difficult if not impossible to determine; therefore, the CONTRACTOR shall pay the CITY liquidated damages in the amount of $1,500 per calendar day, for every work day the schedule submittal, revision, or resubmittal is late. This amount shall be subtracted from any monies due and shall be forfeited by the CONTRACTOR.

I. Revisions To Approved Baseline Schedule:

1. The CONTRACTOR shall execute the Work in accordance with the approved Baseline Schedule. Out of sequence construction, defined as a change in the Baseline Schedule, requires prior approval of the ENGINEER as defined below.
2. Upon approval of a Time Impact Analysis the change shall be reflected in the next schedule submittal by the CONTRACTOR.
3. No change (except for resubmittals) to the approved Baseline Schedule shall be made without the prior written approval of the ENGINEER. If the CONTRACTOR desires to make a change to the approved Baseline Schedule, the CONTRACTOR shall request permission from the ENGINEER in writing, stating the reasons for the change as well as the specifics, such as revisions to activities, logic, durations, etc. The ENGINEER will provide a response within five (5) calendar days. Actual status and/or forecast dates for revised submittals shall be added without prior acceptance by the ENGINEER. They are still subject to review by the ENGINEER.

4. If the ENGINEER considers a change to the Baseline Schedule to be of a major nature, the ENGINEER may require the CONTRACTOR to revise and submit for acceptance all of the affected portion(s) of the Baseline Schedule including an analysis to show the effect on the entire project. The proposed revision and analysis shall be submitted to the ENGINEER within fifteen (15) calendar days after the ENGINEER notifies the CONTRACTOR the revision is of a major nature. A change will be considered to be of a major nature if the time estimated for an activity or sequence of activities is varied from the original plan to the degree that there is reasonable doubt that the Contract completion date will be met, or if the change impacts the Work of other CONTRACTORS at the Jobsite. Changes to activities having adequate float shall be considered as minor changes, except that an accumulation of minor changes may be considered a major change when such changes affect the Contract completion date. (Activities having adequate float are activities which are not critical after the change is made.).
5. Only upon approval of a change by the ENGINEER shall it be reflected in the next Schedule update submitted by the CONTRACTOR.

J. Updates To Approved Baseline Schedule And Progress Payments:

1. Monthly Updates:

a. All updated or revised Schedules shall be submitted in the same detail as the original submittal, unless modified in writing by the ENGINEER. Written confirmation of the major trade Subcontractors and Suppliers shall be required quarterly.
b. The initial Schedule update shall be submitted within fourteen (14) calendar days after approval of the Baseline Schedule. The Schedule update shall be cost loaded. Subsequent Schedule updates shall be submitted at the beginning of each month thereafter for the duration of the Contract. The data date shall be the first working day of the month unless otherwise directed by the ENGINEER. The Schedule and computer tabulations shall be reviewed by the CONTRACTOR'S Construction Scheduler at a joint update meeting with the ENGINEER and the INSPECTOR.

2. Monthly Schedule Updates:

a. The CONTRACTOR shall submit the Monthly Schedule Update to the ENGINEER each month, on a date assigned by the ENGINEER. The proposed Monthly Schedule Update prepared by the CONTRACTOR shall include all information available as of the cutoff date established by the ENGINEER. A detailed list of all proposed schedule changes (logic, duration, status, additions, and deletions) shall be submitted with the update (Claim Digger report). Prior to the monthly update review meeting, the CONTRACTOR shall obtain from his Subcontractors, Suppliers, and staff the necessary information as required to reflect progress to date. A proposed Monthly Schedule Update containing the information set forth below shall be available for review at the meeting.

(1) For activities started and/or completed during the previous period: Actual start and actual completion dates, and number of shifts used to accomplish the activity.

(2) For activities begun but not yet complete to date: Remaining duration of the Work, estimated percent complete, and estimated completion date. The schedule shall be calculated using remaining durations and retained logic.

(3) For activities not yet started: Estimated start dates, revised duration's, and estimated completion dates, as necessary.

(4) For authorized Change Orders, including Emergency Change Orders, Time and Material Change Orders, and Unilateral Change Orders: Revised and original activities, number of shifts, crew sizes by craft, construction equipment required, cost, and durations, and status of all outstanding Notices of Non-Compliance, where required.

(5) The monthly update of the Network Diagram shall be for the whole project. The previous month's activities shall be reported as they actually took place and designated as complete, if actually completed, on the network diagram update.

(6) The electronic file of the submitted Network Diagrams and the related reports shall constitute a clear record of progress of the Work from Notice to Proceed to final completion.

(7) The monthly submittal to the ENGINEER shall be accompanied by the Schedule Narrative Report. The Schedule Narrative Report shall describe the physical progress during the report period, Plans for continuing the Work during the forthcoming report period, actions planned to correct any negative float predictions, and an explanation of potential delays and/or problems and their estimated impact on performance and the overall project completion date. In addition, alternatives for possible schedule recovery to mitigate any potential delay and/or cost increases shall be included for consideration by the ENGINEER The report shall follow the outline set forth below:
CONTRACTOR'S Schedule Narrative Report Outline:

a) CONTRACTOR'S Transmittal Letter.
b) Description of problem areas.
c) Current and anticipated delays:
    1) Cause of the delay.
    2) Corrective action and schedule adjustments to correct the delay.
    3) Impact of the delay on other activities, milestones, and completion dates.
d) Changes in construction sequences.
e) Pending items and status thereof:
    1) Permits.
    2) Change Orders.
    3) Time extensions.
    4) Non-Compliance Notices.
f) Contract Completion Date(s) status:
    1) Ahead of schedule and number of working days.
    2) Behind schedule and number of working days.
g) Other project or scheduling concerns including any plant shutdowns, duration of each shutdown, and analysis of any Work to be performed during the shutdown period.
h) Include reviewed and updated Network Diagram and Reports.

i) Include revised Cost Loading and Cash Flow Information of this Section.

j) Include substantial revisions to manpower and equipment requirements.

(8) The CONTRACTOR shall provide to the ENGINEER, the Network Diagram, the Predecessor/Successor Report sorted by activity number, the list of all changes made to the previously approved Schedule, and the Schedule Narrative Report. The data required to provide all other scheduling reports called for in this Section shall be provided on e2020.

3. The CONTRACTOR'S Construction Scheduler and representatives from major Subcontractors and Suppliers (as requested by the ENGINEER shall attend the monthly update meetings with the above data prepared in advance for each meeting to provide, as of the end of the updating period, a complete and accurate report of the current procurement schedule (in accordance with the requirements of CONSTRUCTION STATUS REPORTS of the GENERAL REQUIREMENTS), construction progress, and a depiction of how the CONTRACTOR plans to continue the Work of the project to meet all Contract Completion Dates. All network changes and status dates agreed to during each update meeting shall be considered as acceptable by all parties unless written notice of exception is given by an objecting party within five (5) calendar days after the update meeting. For major network changes that cannot be agreed to during an update meeting, the CONTRACTOR shall submit, in writing, such revisions for the ENGINEER'S approval prior to inserting such changes into the network. Submissions may be in the form of marked-up networks, fragnets, or schedule abstracts provided they are submitted with a letter of transmittal. The submission and approval procedures for this information shall follow the same timetable described in H.2 of this Section.

4. Predicated on the results of the ENGINEER'S review of Monthly Schedule Update submittals and accompanying reports, the CONTRACTOR may be required to revise the Monthly Schedule Update. Conditions under which a revision will be made are as follows:

   a. When a delay in the completion of any Work item or sequence of Work items results in an indicated extension of the project completion or interim milestone dates detailed herein by thirty (30) calendar days.
   b. When delays in submittals or deliveries or Work stoppages are encountered which make replanning, rescheduling, or resequencing of the Work necessary.
   c. When the schedule does not represent the actual execution and progress of the project.

5. Required revisions of the Monthly Schedule Update are due within five (5) calendar days of notice by the ENGINEER that a revision is required. All revisions and additions to the Schedule are subject to the review of the ENGINEER. No changes (except resubmittal cycles) are to be implemented in the Schedule by the CONTRACTOR without the prior approval of the ENGINEER. When the Monthly Schedule Update or its required revision is approved by the ENGINEER, it then becomes the Current Schedule Update. The Current Schedule Update will be used for the period from which it is approved until its successor is submitted and approved.

6. The Schedule Narrative Report, the updated Project Schedule (networks, and computer computations), the Cash Flow Projection, the updated network

diagram, and one (1) copy of the updated CD reflecting the status of the project agreed to at the updating meeting, shall be submitted to the ENGINEER within five (5) calendar days after each updating meeting.

7. The update report shall show the activities or portions of activities completed during the reporting period and their total value as the basis for the CONTRACTOR'S request for partial payment. Payments made pursuant to PARTIAL PAYMENTS of these GENERAL REQUIREMENTS will be based on the total value of such activities completed or partially completed after verification by the INSPECTOR. The report shall state the percentage of the Work actually complete as of the report date. If the project is behind schedule, progress along other paths with negative float shall also be reported.
8. Failure of the CONTRACTOR to submit the Monthly Schedule Updates in a timely, accurate manner and in accordance with the requirements of this Section will result in costs to the CITY which are difficult, if not impossible to determine; therefore, the CONTRACTOR shall pay the CITY liquidated damages in the amount of $1,000 per calendar day for every work day the submittal is late or not in full compliance with the requirements of this Section. This amount shall be deducted from any monies due and forfeited by the CONTRACTOR. In addition to the liquidated damages, if the CONTRACTOR fails to submit any of the Monthly Schedule Update deliverables, or to meet any of the other updating requirements, progress payments will be withheld until such time as the required update information is submitted.

K. Weekly Progress Reports:

1. Once each week, on a day established by the ENGINEER, the CONTRACTOR shall submit:

   a. A progress schedule listing the activities completed and in progress for the previous week and the activities scheduled for the succeeding two (2) weeks. The activity designations shall be consistent with the activity designations in the Current Schedule Update. A bar chart shall be used to display the information in pictorial form. The appropriate schedule activity number shall be listed for each bar.

L. Cost Loading and Cash Flow:

1. With the initial Baseline Schedule submittal, each Monthly Schedule Update, and each revision, the CONTRACTOR shall also submit a schedule of cost loading and cash flow to the ENGINEER. There shall be a strict correlation between the sum of individual activity costs and the total values indicated for bid items. That is, each individual activity within the Schedule shall employ a code, which in summary, attaches its cost, if any, to the appropriate bid items. The sum of activity costs within a specific code shall equal the cost of its corresponding bid items and approved Change Orders.
2. Expected payment requests for each month shall be included with proposed updates. The cash flow shall show the net payment requests for each month. The cumulative payment requests to date shall also be shown after deducting retainage and any other monies withheld. The cash flow shall be shown in tabular format and in graphic format.
3. The CONTRACTOR, at the Preconstruction Scheduling Conference, shall explain in detail the procedure to be used to develop the Schedule activity cost loading and cash flow. This procedure is subject to the review and approval of the ENGINEER and the INSPECTOR. Receipt and approval of the Schedule

Cost Loading and Cash Flow Summary is a condition precedent to the making of any payments under the Contract. Therefore, failure to submit an acceptable schedule cost loading and cash flow summary shall be cause for withholding any progress payments due or that may become due under this Contract, until such time as an acceptable cost loading and cash flow summary is received.

4. In accordance with the updating procedures, when an activity is deemed substantially complete by the ENGINEER, then such activity will no longer be treated as an activity affecting the critical path or successor activities on the project. The cost of correction of any punchlist items associated with substantially completed activities will be covered by amounts deemed by the ENGINEER and the INSPECTOR to be adequate to cover such costs.

M. Responsibility For Completion:

1. Whenever it becomes apparent from the current Monthly Schedule Update that phasing, milestone, constraint, restraint, or Contract Completion Date will not be met, the CONTRACTOR shall submit a plan to recover the delay using some or all of the following remedial actions;

   a. Increase construction manpower in such quantities and crafts as necessary to eliminate the backlog of work and meet the current Contract Completion Date.
   b. Increase the number of working hours per shift, shifts per working day, working days per week, the amount of construction equipment, or any combination thereof to eliminate the backlog of Work.
   c. Reschedule the Work in conformance with the Specification requirements.

2. Prior to implementing any of the above actions, the CONTRACTOR shall notify the ENGINEER and obtain approval from the ENGINEER. If such actions are approved, the Schedule revisions shall be incorporated by the CONTRACTOR into the Network Diagram before the next Monthly Schedule Update is due.
3. Under no circumstances will the addition of equipment or construction forces, increasing the Working hours or any other method, manner, or procedure to return to the contractually required Contract Completion Date be considered justification for a Change Order or be treated as acceleration where the need for a recovery schedule has been caused by the CONTRACTOR and/or its Subcontractors or Suppliers, at any tier.
4. The ENGINEER may elect to withhold progress payments until the CONTRACTOR'S progress indicates that the milestone date(s) and/or the Contract Completion Date will be met.

N. Schedule Time Extensions:

1. When Change Orders or delays are experienced by the CONTRACTOR and a time extension is requested, the CONTRACTOR shall submit to the ENGINEER, a written Time Impact Analysis illustrating the influence of all changes or all delays on the current Contract Completion Date. The Time Impact Analysis shall be based on an As-Built Schedule Analysis approach. The As-Built Schedule that will be created will incorporate all Actual Start and Finish dates, actual durations of activities, and actual sequences of construction. This Time Impact Analysis shall incorporate all delays (including CITY, CONTRACTOR, and Third-Party delays without exception) in the time frame they occurred with actual logic ties. The As-Built Schedule data shall be obtained from the most recent accepted

Baseline Schedule or Monthly Schedule Update as of the time the Preliminary Change Order, Emergency Change Order, Unilateral Change Order, or Allowance Order was issued to the CONTRACTOR. The As-Built Schedule shall be created as an early start schedule. The As-Built Schedule shall use the original activity durations for all incomplete work and the actual logic driving all activities. All requests for time extensions shall be based upon an analysis of this As-Built Schedule. The critical path will be established, and all CITY caused delays on the critical path will be identified. The time extension will be based solely upon the cumulative duration of all CITY and Third Party caused delays (as set forth in UNAVOIDABLE DELAY of the GENERAL CONDITIONS) which are on the critical path. Any time extensions to the project Interim Milestone Dates shall be non-compensable time extensions only.

2. Time extensions will be granted only to the extent that equitable time adjustments for the activity or activities affected exceed the total or remaining float along the critical path of activities at the time of actual delay, or at the time the Preliminary Change Order, the Emergency Change Order, the Unilateral Change Order, or the Allowance Order was issued to the CONTRACTOR. Float or slack time is not for the exclusive use or benefit of the ENGINEER or the CONTRACTOR but is an expiring resource available to all parties as needed to meet Contract milestones and the Contract Completion Date. Time extensions shall not be granted nor delay damages paid until;

    a. A delay occurs which is beyond the control and without the fault or negligence of the CONTRACTOR and its Subcontractors or Suppliers, at any tier; and
    b. Which extends actual performance of the Work beyond the applicable current Contract Completion Date and the most recent date predicted for completion of the project on the approved Monthly Schedule Update, current as of the time of the delay or as of the time of issuance of the Preliminary Change Order, the Emergency Change Order, the Unilateral Change Order, or the Allowance Order was issued to the CONTRACTOR.

3. Each Time Impact Analysis shall be submitted in triplicate, within fifteen (15) calendar days after a delay occurs, or issuance of the Preliminary Change Order, Emergency Change Order, Time and Materials Change Order, or Unilateral Change Order. <u>If the CONTRACTOR does not submit a Time Impact Analysis for a specific Change Order or delay within the specified period of time, the CONTRACTOR shall be deemed to have irrevocably waived any rights to additional time and cost.</u>

4. Since float time within the Schedule is jointly owned, it is acknowledged and agreed by the CONTRACTOR that CITY caused delays on the project may be offset by CITY caused time savings (including, but not limited to: critical path submittals returned in less time than allowed for in the Contract, approval of substitution requests which result in a savings of time along the critical path for the CONTRACTOR, etc.). In such an event the CONTRACTOR shall not be entitled to receive an extension of time or delay damages until all CITY caused time savings are exceeded and the Contract Completion Date is also exceeded.

5. Approval or rejection of each Time Impact Analysis by the ENGINEER shall be made within fifteen (15) calendar days after receipt of each Time Impact Analysis, unless subsequent meetings and negotiations are necessary. Upon approval, a copy of a Time Impact Analysis signed by the ENGINEER shall be returned to the CONTRACTOR for incorporation into the next Monthly Schedule Update.

6. Upon mutual agreement by both parties, fragnets illustrating the influence of Change Orders and delays shall be incorporated into the Schedule during the first update after agreement is reached.
7. In the event the CONTRACTOR does not agree with the decision of the ENGINEER regarding the impact of a change or delay, it shall be resolved in accordance with CLAIMS AND PROTESTS of the GENERAL CONDITIONS.

O. Manpower:

1. The CONTRACTOR shall submit with the initial Baseline Schedule a histogram depicting total project manpower for its own forces and for each of its Subcontractors for each month. The histogram shall be based upon and shall be in substantive agreement with the number of shifts and crew sizes in the Schedule and shall be updated monthly and submitted with the Monthly progress report. The update shall show actual manpower for each month during the construction period to date and required manpower for both base scope and Change Order Work each month, necessary to complete all remaining activities to insure timely project completion.

P. Construction Equipment:

1. The CONTRACTOR shall submit with the initial Baseline Schedule a tabular report listing each major piece of construction equipment for itself and each of its Subcontractors for each month. This major equipment is the equipment that is or will be used at the Worksite. Each major piece of the CONTRACTOR'S and the Subcontractor's equipment shall be separately described, identified, and numbered in the report. The tabular report shall be based upon and in substantive agreement with the number of shifts and crew sizes by craft in the Schedule and shall be updated monthly and submitted with the monthly progress report. The update shall show actual construction equipment for each month during the construction period to date and the required construction equipment for each month necessary to complete all remaining activities including the Change Order Work, on the early finish date.

Q. Submittal Of "As-Built" Schedule:

1. As a condition precedent to any release of retention, the last update to the Schedule submitted shall be identified by the CONTRACTOR as the "As-Built Schedule". The "As-Built Schedule" shall reflect the exact manner in which the project was actually constructed (including start and completion dates, activities, sequences, and logic) and shall be signed and certified by the CONTRACTOR'S Project Manager and Construction Scheduler as being a true reflection of the way in which the project was actually constructed.

END OF SECTION

SECTION 01322
CONSTRUCTION PROGRESS PHOTOGRAPHY

PART 1 - GENERAL

1.1 SUMMARY

A. Required: Provide photographs taken at the Jobsite at the specified stages of Contracted Work in accordance with provisions of this Section.

1. Take three views of each street (7th St, Grand View St., and Lake St.) and each major improvement (water feature and bridge area, in-park improvement areas, pump house, StormFilter area, and all underground improvement areas in the street) or other feature as directed by the ENGINEER at thirty (30) day intervals during the period of Contracted Work.
2. Take first photographs just before CONTRACTOR starts any work operations at the Jobsite.
3. Take final photographs when all Contracted Work has been completed, regardless of time interval since previous photographs were taken. These photographs shall be suitable for use in City presentations and publications.

B. Related Work:

1. Documents affecting work of this Section include, but are not necessarily limited to, GENERAL CONDITIONS, DIVISION 1 - GENERAL REQUIREMENTS and other Sections of the Project Manual.

1.2 SUBMITTALS

A. Comply with pertinent provisions of Section 01330 - SHOP DRAWINGS/SUBMITTALS of the GENERAL REQUIREMENTS.

B. Except as otherwise directed by the ENGINEER, submit three color prints of each view.

1.3 QUALITY ASSURANCE

A. Secure the services of a full-time professional photographer who is skilled and experienced in construction photography and whose work samples are acceptable to the ENGINEER.

B. Do not replace the photographer without the ENGINEER'S written approval.

C. Do not permit prints to be issued for any other purpose without specific written approval from the ENGINEER.

D. Photographs and prints to be of professional quality; clear, in focus, with high resolution and sharpness, and with minimum distortion. Prints to be with contrast, detail and finish for acceptable reproduction by half-tone cut.

PART 2 - PRODUCTS

2.1 CONSTRUCTION PHOTOGRAPHS

A. Provide Color Prints and digital files with a minimum of 5 megapixels:

1. Size: 8" x 10".

2. Type: Smooth surface, glossy print, single weight paper with white base mounted on muslin or on double weight glossy paper.

B. On the front or back of each print, in a manner not damaging to the print, identify the following:

1. Job name and address;
2. Location from which photographed;
3. Date of photograph;
4. Photographer's name and address, and the photograph number.

PART 3 - EXECUTION

3.1 CONSTRUCTION PHOTOGRAPHY

A. View Locations: As directed by the ENGINEER. Location(s) to provide diversified overall view of the Work from a position that is expected to remain accessible throughout progress of the Contracted Work for added photography.

Continue to take photographs at same view position of the Works to show continuous progress of the Works until the Works are completed or as directed by the ENGINEER.

B. Notifications: Notify the ENGINEER seven (7) days in advance of proposed day of photography.

C. Weather Conditions: When inclement weather is anticipated, consult with the ENGINEER to determine acceptable alternate arrangements.

D. Timing of Photography: To the maximum extent practicable, take photographs at the same time of day throughout progress of the Contracted Work. Timing shall be approved by the ENGINEER.

E. On Contract Drawing: Photographer to identify each photograph location or by such other means as acceptable to the ENGINEER, to enable future photographs to be taken from the same location and position.

F. Change of Locations: When so directed by the ENGINEER because of construction, change one or more of the locations inside or outside of the building(s).

END OF SECTION

SECTION 01323
CONSTRUCTION STATUS REPORTS

1.1 THE REQUIREMENT

A. Weekly Status Report:

During the construction phase of the Work, the CONTRACTOR shall submit weekly written status reports to the ENGINEER and the INSPECTOR. The report shall contain a record of inspections and tests, not performed by CITY forces, for all Work accomplished subsequent to the previous report and shall include the following information:

1. Type of work under way during the time frame of the report (e.g., earthwork, concrete work, structural steel erection, equipment manufacturing, component installation).
2. Inspections and tests, and location of inspections and tests that were made.
3. Results of inspections.
4. Reports of tests performed, including those specified, with the results of the tests, and acceptance criteria, including failures and remedial action to be taken. Test results, including all computations, shall be attached to the report form. Where test results cannot be completed by the time the report is submitted, a notation shall be made that the test was performed, including the approximate expected date that test results will be reported.
5. Report of any nonconforming items/activities. Nonconformance report forms designed solely for this purpose shall be utilized.
6. Results of inspections of material and equipment done upon their arrival at the Jobsite and prior to their incorporation into the Work. This includes, but is not limited to, compliance with approved submittals, damage, and proper storage requirements.
7. Offsite quality control activities.
8. Instructions received from the ENGINEER or INSPECTOR.
9. In all cases, the report must be verified and signed by the CONTRACTOR'S representative. The verification is to contain the statement that all supplies and materials incorporated in the Work are in compliance with the terms of the Contract except where noted.

B. Monthly Procurement and Delivery Status Report:

1. The CONTRACTOR shall prepare and submit to the INSPECTOR and the ENGINEER a comprehensive Monthly Procurement and Delivery Status Report covering the procurement and delivery of equipment and materials to the Jobsite. This report shall outline the purchasing status of all material, equipment and contracts. The purchasing status report shall include the following information:

    a. Specification, purchase order, and Contract number;
    b. Submittal Number;
    c. Item or service description;
    d. Required job site date; and
    e. Project Delivery Date.

    In addition, this report shall contain a three (3) month "Look Ahead Projection" of all factory tests, shipments to be inspected, or any other supplier activity which the CONTRACTOR, the ENGINEER, or the INSPECTOR, has the right to

witness and accept. The report shall detail arrangements which are planned for meeting the witnessing and acceptance requirements, and for recording tests passed.

2. The CONTRACTOR shall obtain a submittal schedule for technical data, Shop Drawings, material and test certificates, O&M manuals, spare parts lists, and other submittals, from each supplier. This schedule shall be monitored and updated on a monthly basis and shall be submitted to the INSPECTOR and the ENGINEER with the Monthly Procurement and Delivery Status Report.

C. Miscellaneous Submittals:

Required: CONTRACTOR shall prepare a Daily Construction Report recording the following information concerning events at the job-site and submit duplicate copies to the Consultant or ENGINEER at weekly intervals:

1. List of Subcontractors and Sub-Subcontractors at the site**,** types of works and job location.
2. Approximate count of CONTRACTOR'S personnel at the site**,** name, type of work and job location.
3. Construction equipments at the site.
4. High and low temperatures, general weather conditions.
5. Accidents and unusual events.
6. Meetings and significant decisions.
7. Stoppages, delays, shortages, losses.
8. Meter readings and similar recordings.
9. Emergency procedures.
10. Inspection, Orders and requests of governing authorities**,** type of work.
11. Change Orders received, implemented.
12. Services connected, disconnected.
13. Notice of Non-Compliance, Notice-to-Correct, and Job-Memorandum received.
14. Equipment or system tests and start-ups.
15. Preparation of Record Drawings and Project Manual.
16. Equipment or material delivered to site.
17. Partial completions, occupancies.
18. Substantial completions authorized.

END OF SECTION

SECTION 01330
SHOP DRAWINGS / SUBMITTALS

1.1 THE REQUIREMENT

A. The CONTRACTOR shall prepare, approve, sign and submit to the ENGINEER any and all Shop Drawings, Manufacturers' Project Data, Job References, Certificates, Wiring Diagrams, Operation and Maintenance Manuals and Samples required by the Contract Documents on "e2020" (the City's web-based construction management application).

NOTE: All references in the Technical Sections under "Shop Drawings" or "Submittal" to the words "approval of" shall mean "reviewed by".

B. The CONTRACTOR, by preparing, reviewing, approving and submitting the Shop Drawings, Manufacturers' Product Data, Job References, Certifications, Wiring Diagrams, Operation and Maintenance Manuals and Samples, represents that the CONTRACTOR has determined and verified all materials, field measurements and filed construction criteria related thereto, and has checked and coordinated the information contained within such submittals with the requirements of the Work, the Project and the Contract Documents.

C. The CONTRACTOR shall inform the ENGINEER, in writing, of any and all deviations and/or questions regarding the Contract Documents and shall properly identify these areas of concern in the transmittal of the Shop Drawings, Manufacturers' Product Data, Job References, Certification, Wiring Diagram and Samples for proper written disposition respectively by the ENGINEER. The CONTRACTOR shall provide Shop Drawings in accordance with Specification Section 01116 of the General Requirements.

D. Transmittal sheets for all Shop Drawings, Manufacturers' Product Data, Wiring Diagrams, Job References, Certifications, Operation and Maintenance Manuals and Samples shall be uploaded in e2020 in accordance with Specification Section 01116 of the General Requirements.

E. The CONTRACTOR is not relieved of the responsibility for any deviation from the requirements of the Contract Documents, by virtue of CONTRACTOR'S approval and submittal of the Shop Drawings, Manufacturers' Product Data, Wiring Diagrams, Operation and Maintenance Manuals and Samples to the ENGINEER. All deviations and/or interpretations of the Contract Documents must be approved in writing by the ENGINEER.

F. The review of the Shop Drawings, Manufacturers' Product Data, Job References, Certifications, Wiring Diagrams, Operation and Maintenance Manuals; and Samples by the ENGINEER does not relieve the CONTRACTOR of its responsibility from any requirements of the Contract Document, or any errors or omissions in such submittals, or for any failure to perform the requirements and intent of Contract Documents.

G. The Shop Drawings shall include such fabrication, erection, and setting drawings; manufacturer's standard drawings or catalog cuts, performance and test data; Job References, Certifications, wiring and control diagrams; schedules; samples; and descriptive data pertaining to material, machinery and methods of construction as may be necessary to carry out the intent of contract Drawings and Project Manual and shall not relieve the CONTRACTOR from the responsibility for proper fitting and construction of

the Work, nor from furnishing materials and Work required by the Contract, which may or may not be indicated on the Shop Drawings.

The CONTRACTOR shall perform no portion of the Work requiring submittal and review of Shop Drawings, Product Data, Job References, Certifications**,** samples, etc. until such submittals have been reviewed by the ENGINEER.

H. Shop Drawings shall show in detail the size, sections and dimensions of all the members, the arrangement and construction of all connections and joints and other pertinent details; also, all holes, straps and other fittings required by other CONTRACTORS for attaching their work. When required, by the ENGINEER or by Standard Practice of the CONTRACTOR, engineering computations shall be submitted for the record. The CONTRACTOR shall be responsible to coordinate with other trades, collect all necessary data or information for preparation of shop Drawings and deliver approved copies of Shop Drawings to all others whose work is dependent thereon.

I. At all times, the CONTRACTOR shall maintain at the site of the project a complete file of Shop Drawings and Manufacturers' Data of its own and all Subcontractors. All Shop Drawings and Manufacturers' Data shall be reviewed and by the CONTRACTOR.

J. Submittals shall be made within the times specified in the various Divisions of the Project Manual. If time is not specified, they shall be made within a period which will cause no delay in the work. The CONTRACTOR shall allow twenty-one (21) calendar days on the project construction schedule for each item submitted for the review by the ENGINEER.

K. In the event the ENGINEER finds the submittal to be incomplete, it will be returned to the CONTRACTOR for required revised drawings. The CONTRACTOR will revise the drawings and resubmit as directed on original submittals. Any delay resulting from the need for resubmittals shall be the CONTRACTOR'S responsibility.

L. In the event, the Contract Documents are prepared by a Consultant Architect or ENGINEER, the pertinent requirements of this Section will be effective, except as follows or as otherwise modified in the Divisions that follow:

1. All references in the Contract Documents to the Consultant shall mean the Consultant Architect or Consultant Engineer.
2. Submittals shall be uploaded in e2020 in accordance with Specification Section 01116 of the General Requirements.
3. If submittal is found to be incomplete and revised drawings are required, CONTRACTOR will be notified by the ENGINEER.
4. When Shop Drawings are required in accordance with the Contract, due to "substitutions" or for "or equal" determination or review as indicated hereinbefore, after final check, said drawings, reviewed and signed by Consultant shall be forwarded to the ENGINEER, Bureau of Engineering for final review and distribution electronically, through e2020.
5. Unless otherwise specified for Operation and Maintenance Manuals, four (4) copies are required, and all copies should be delivered to the Consultant Architect for review. After reviewed and signed by the Consultant, scan and electronically upload in e2020 for final review. Once approved by the ENGINEER on e2020, four (4) copies shall be forwarded to the ENGINEER for distribution to the CITY maintenance staff. The CONTRACTOR will receive a transmittal of acceptance of Operation and Maintenance Manual Submittal.

M. In the event the Contract Documents are prepared by CITY personnel, four (4) copies of each Operation and Maintenance Manuals, shall be sent to the ENGINEER by the CONTRACTOR for review and final distribution. Distribution requirements described in Items L(4) and L(5) hereinbefore remain effective.

N. CONTRACTOR'S Coordination:

1. The ENGINEER will return and will not review unrelated submittals.
2. The CONTRACTOR may be required to provide drawings, setting diagrams and similar information necessary for proper coordination of Contracted Work. Such data shall remain between the CONTRACTOR and CONTRACTOR'S Subcontractor and will not be reviewed by the Consultant or ENGINEER unless specifically called for in the Contract Documents.
3. Consultant or ENGINEER will not review any required Structural Shop Drawings, Structural Calculations, etc., not prepared or signed by a State of California licensed ENGINEER.
4. The ENGINEER will return and will not review any submittal requiring coordination with other submittals until such other submittals or required information are received by the ENGINEER.

O. CONTRACTOR'S Submittals: CONTRACTOR'S submittals required for performance of Contracted Work shall be electronically submitted in e2020 construction subsections 8.1 through 8.22, and shall include, but are not limited to, the following:

1. Contract Price (Cost Breakdown).
2. Construction Schedule and Notification to ENGINEER of completion of each milestone or percentage increment of the Work as required.
3. Submittal Schedule.
4. Daily Construction Reports.
5. Shop Drawings and Structural Calculations.
6. Manufacturer's Data and Specifications.
7. Samples.
8. Templates.
9. Certificate of Compliance.
10. Construction Photographs.
11. Substitutions.
12. Record Drawings and Record Project Manual.
13. Operation & Maintenance Manuals.
14. Stock Materials, Spare parts, tools.
15. Material Testing Results.
16. Daily Statements of cost-plus percentage Change Order.
17. Survey grade sheets.
18. Copies of Notice-To-Correction or Notice of Non-Compliance from governing authorities.
19. Maintenance Logs and Maintenance Schedule.

P. Administrative Submittals include, but are not limited to the following:

1. Permits.
2. Request for Payments.
3. Performance and Payment Bonds.
4. Insurance Certificates.
5. List of Subcontractors and proof of qualifications.
6. Hazardous Communication Program.

7. Certified weekly payroll records.
8. Ethnic Composition of Work Force Report.
9. Third Party Testing Agency.

Q. CONTRACTOR shall conform to the provisions of the Contract Document and may be specifically directed by the Consultant or ENGINEER.

1. Preparation and processing of submittals shall be coordinated with Contracted Work operations, which includes fabrication, purchasing and delivery of work items so as not to delay Contracted Work operations.
2. In each Submittal, mark every applicable material, product, equipment, manufacturer's data, product information, color samples, rating or values, part and model numbers, etc. by red color circle. Each of the submittal items must be clearly distinguishable from other unrelated or similar items listed in the Manufacturer's Catalog or Technical Specifications, Manuals, etc.

R. Coordination and Submittals:

1. Carefully review and coordinate all aspects of each item being submitted.
2. Carefully review contract drawings and technical sections, verify all work as laid out or indicated meeting the applicable codes and standards.
3. Ensure ample time for reviewing and processing of the submittals by the CITY or other authorized agencies, delays resulting from improper and untimely submittals shall be the responsibility of the CONTRACTOR.
4. Verify that all such submittal items conform to the Project Manual requirements noted in the Technical Sections.
5. Verify all site conditions and provide all required dimensions and measurements in Shop Drawings.
6. Where necessary, review the CITY'S comments, make changes, and resubmit to local governing agencies for approval. Upload the approved plans or drawings for review on e2020 and furnish copies of said drawings at the ENGINEER'S request.

S. CONTRACTOR shall affix to each submittal, the CONTRACTOR'S electronic signature certifying that required coordination has been performed and include on an attached label for processing and recording action taken, noting the following:

1. Name and address of the Subcontractor(s).
2. Name and address of the Supplier.
3. Name and address of the Manufacturer.
4. Reference to Specification Section Number and Title.
5. Reference to Drawing Sheet Number and detail(s).
6. Priority Number and expected return date.

T. CONTRACTOR shall verify on e2020 that the CONTRACTOR has met the following CITY requirements:

1. Conformance in all respect to the Contract Document requirements.
2. Has reviewed and coordinated all aspects of each submitted item relative to manufacturer's product data, Specifications, etc.
3. Has verified with site conditions and all dimensions.
4. That all questions and/or comments prepared by the Consultant or ENGINEER have been reviewed and answered.

5. CONTRACTOR is not relieved from responsibilities for errors, omissions and any deviation in the required submittals as revealed resulting from the CITY'S or Consultant's review of such submittals.
6. In each Section of the Project Manual, all required lists of material, product or equipment; manufacturer's data; and etc., shall be appropriately grouped and submitted to the CITY for review as one submittal. Piece meal submittals will not be accepted.
   Any submittal with outstanding product data, manufacturer's specification or any required information shall deem to be incomplete and subject for rejection without any review. Subsequent submittal shall be considered as second submission.
7. Exception:
   For Division 16 - ELECTRICAL, CONTRACTOR may submit all required list of material, product or equipment, manufacturer's data, wiring diagram, product information and etc., from various Sections in one submittal.
8. Exception:
   For Section 05120 - STRUCTURAL STEEL, CONTRACTOR may submit the required lists of material, products, equipment, manufacturer's data, product information, color or material samples, structural calculations, and etc., of each section in two separate submittals. Each submittal shall be allowed for two (2) submissions or reviews without additional charge. In the first submittal, CONTRACTOR shall provide a complete list of submittal items and a list of the outstanding product data, manufacturer's specification and etc., to be submitted in the second submittal. Failure to submit said listings shall deem the submittal to be incomplete and causing the submittal to be rejected without review.
9. All Shop Drawings shall be provided with dimensions and measurements verified at the site as stated hereinbefore. If the CONTRACTOR decides to submit the dimensions and measurements at a later time, the CONTRACTOR must state the reason, for the ENGINEER'S approval, why the dimensions and measurements cannot be taken. If approval is granted, the CONTRACTOR shall re-submit the approved submittal with the final dimensions and measurements after the Works are completed. The CONTRACTOR is not relieved from the responsibilities of error and omission, or any problem that may arise during the fabrication or installation.
10. It is considered reasonable that the CONTRACTOR shall make a complete and acceptable submittal to the ENGINEER or Consultant by the second submission of a submittal item. The CITY reserves the right to withhold moneys due to the CONTRACTOR to cover additional costs of the ENGINEER or Consultant's review beyond the second submittal. On the third submittal by CONTRACTOR, the CONTRACTOR will be charged $150 per hour of CITY'S or Consultant's review time and no additional Contract time shall be allowed.
11. Mock-ups shall be delivered to or constructed at the project site. The Contractor shall submit a Transmittal sheet including a picture of the mockup uploaded to e2020. Submit the following Mock-ups for the project:
    a. Sample concrete panel.
    b. Sample bridge - custom panel.
    c. Sample metal fabrications.
    d. Sample protective coatings.

U. Comply with pertinent provisions of the GENERAL CONDITIONS and GENERAL REQUIREMENTS as applicable**,** but not limited**,** to the following:

1. Record Drawings, Record Project Manual, Record Product Data, Record Sample and Record Submittals.
2. Operation and Maintenance Manuals.
3. Manufacturer's Reference Data.
4. Qualification of CONTRACTOR.
5. Certification of Warranty and Guarantee.
6. Manufacturer's Recommended Installation Procedures.
7. Materials List of items proposed to be provided as specified in the Technical Sections of the Project Manual.
8. Samples, illustrating assembly details, workmanship, fabrication techniques, connections, color selection to be submitted as specified in the Technical Sections of the Project Manual.
9. Regarding Concrete Work, submit Portland Cement Mill Certificates, Concrete Mix and Curing Designs, Load Tickets and Product Data.
10. Regarding shop-Inspected fabricated items, submit Shop INSPECTOR Tag, copy of the billing of lading, delivery receipt for materials or equipment.

V. The CONTRACTOR shall comply with all submittal requirements in the Contract Documents. For convenience, a checklist of submittals required in all the Technical Sections is included, but is not necessarily limited to the following:

SECTION OF PROJECT MANUAL	SUBMITTAL
02930 - LANDSCAPE MAINTENANCE	• Product Data • Materials List • Written evidence that Landscape Irrigation System has been inspected • Soils Agriculture Suitability Test Report
03100 - CONCRETE FORMWORK	• Shop Drawing
03300 - CAST-IN-PLACE-CONCRETE	• Product Data • Samples • Laboratory Test Reports • Portland Cement Mill Certificates • Concrete Mix and Curing Design • Load Tickets • (ETC.)

W. CONTRACTOR shall submit requests for changes in products, materials, equipment, and methods of construction required by the Contract Documents, and all submittals shall conform to the provisions of Section 01630 – SUBSTITUTIONS AND "OR EQUAL" SUBMITTAL of the GENERAL REQUIREMENTS of the Project Manual immediately after the issuance of Notice-To-Proceed.

1. All substitution requests shall be made by the CONTRACTOR and shall imply the CONTRACTOR'S approval of such substitutions.

X. The Following Are Not Considered As Substitutions:

1. Substitutions requested by Bidders during the bidding period or prior to award of contract will not be considered or accepted.
2. Revisions to Contract Documents requested by the ENGINEER or the Consultant.
3. Specified options of products and construction methods included in Contract Documents.
4. The CONTRACTOR'S determination of and compliance with governing regulations and orders issued by governing authorities.

Y. CONTRACTOR shall perform no portion of the Contracted Work requiring submittal and review of Shop Drawings, Product Data, Samples, etc. until such submittals have been reviewed by the Consultant or ENGINEER. All work not shown on Shop Drawings or not conforming to Contract shall be removed without additional cost to the CITY.

Z. CONTRACTOR shall be responsible for procurement and installation of equipment or material without deviation upon receipt of the reviewed submittal from the ENGINEER or Consultant bearing the designation of ""A" No Exception Taken". Be responsible for the coordination with other trade, proper fitting, and construction of the work, furnishing other material and work required which may not be indicated on the Contract Drawings or Submittals. All submittals shall be reviewed by the CITY for general design or compliance. CONTRACTOR will be responsible for deviation from the drawings or Project Manual, and for errors or omissions of any sort in the Submittals.

AA. CONTRACTOR shall review and attend to all "Note Markings" and/or "Comments Attached" as noted by the ENGINEER or the Consultant on the Submittal. Make corrections or modifications to equipment or material as required.

BB. CONTRACTOR shall omit any article disapproved or noted "Reject" by the ENGINEER, or any article not conforming to the contract, or not of proper quality or grade and provide suitable articles, in lieu thereof in conforming with the Contract.

CC. CONTRACTOR shall resubmit all submittals with corrections as noted by the ENGINEER or the Consultant or as required in timely manner without delay or impact to the contract.

1. Shop Drawings are required in the following subsections:

Item	Section Number	Title	Subject
1	01573	Excavation Shoring, Forms, and Falsework	Trench Shoring
2	207-2.5	Joints	Reinforced Concrete Pipe
3	207-10.2.1	General	Fabricated Steel Pipe
4	303-1.6.1	General	Falsework
5	303-1.7.1	General	Placing Reinforcement
6	303-3.1	General	Prestressed Concrete Construction
7	304-1.1.1	Shop Drawings	Structural Steel

Item	Section Number	Title	Subject
8	304-1.1.2	Falsework Plans	Structural Steel
9	306-4.3	Controller Cabinet Wiring Diagrams	Traffic Signal Construction
10	306-1.2.2	Pipe Laying	Pipeline Shop Drawings

2. Shop Drawings listed above as Items, 5, 6, 8, 9, 10, 12, 13, 14 and 16 shall be prepared by a Civil or Structural Engineer registered by the State of California.

DD. Submittals:

1. Submittals shall consist of the appropriate combination of catalog sheets, material lists, manufacturer's brochures, technical bulletins, specifications, diagrams, or product samples, necessary to describe a system, product, or items. Submittals for systems shall be uploaded in e2020 for review by the ENGINEER.
2. Submittals are required for irrigation systems, street lighting systems, and traffic signals, and may be required for any product, manufactured item, or system.

END OF SECTION

SECTION 01350
AUDIT AND ACCESS TO RECORDS

1.1 THE REQUIREMENT

A. The CONTRACTOR shall maintain books, records, estimates, communications, payroll documents and other evidence directly pertinent to performance of Work under this Contract in accordance with generally accepted accounting principles and practices consistently applied for a period of no less than four (4) years from the date of the Project acceptance by the Board of Public Works. The CONTRACTOR shall also maintain the financial information and data used by the CONTRACTOR in the preparation or support of any cost submissions required for this Contract, or any Modifications or claims, and a copy of the cost summary submitted to the CITY. The CITY authorized representatives shall have access, at all times during normal business hours, to such books, records, documents, and other evidence for the purpose of inspection, audit and copying. The CONTRACTOR will provide proper facilities for such access and inspection.

B. The CONTRACTOR agrees to make A through G of this Article applicable to this Contract and all Modifications or claims affecting the Contract price. The CONTRACTOR agrees to include A through G of this Article in all his contracts and all tier subcontracts in excess of $10,000, and to make A through G of this Article applicable to all Modifications and claims related to project performance.

C. Audits conducted under this Article shall be in accordance with generally accepted auditing standards and established procedures and guidelines of the reviewing or audit agency.

D. The CONTRACTOR agrees to the disclosure of all information and reports resulting from access to records under A and B of this Article, to the CITY and affected agencies.

E. Records under A and B of this Article shall be maintained and made available during performance of Work under this Contract within the time period specified in A of the Article. In addition, those records which relate to any portion of this Contract, to any Modification, to any dispute, to litigation, to the settlement of claims arising out of such performance, or to costs or items to which an audit exception has been taken, shall be maintained, and made available within the time period specified in A of the Article.

F. This right of access Article applies to financial records pertaining to this Contract and all Contract Modifications. In addition, this right of access applies to all records pertaining to all contracts, contract modifications, and contract amendments:

1. To the extent the records pertain directly to Contract performance;

2. If there is any indication that fraud, gross abuse, or corrupt practices may be involved; or

3. If the Contract is terminated for default or for convenience.

G. Access to records is not limited to the required retention periods. The authorized representatives designated in A of this Article shall have access to records at any reasonable time for as long as the records are maintained.

H. Provided that CITY has made demand for access or audit, pursuant to this Section, CONTRACTOR'S compliance with provisions A through G of this Section shall be a

condition precedent to maintenance of any legal action or proceeding by the CONTRACTOR against the CITY and to CONTRACTOR'S right to Progress or Final Payment. Without limitation to the foregoing, or to any other provisions for withholding set forth in the Contract Documents, CITY shall have the right, in its sole discretion and in addition to any right of withholding of retention, to further withhold from any payment to CONTRACTOR a sum of up to ten percent (10%) of the total amount set forth in CONTRACTOR'S current, unpaid Application(s) for Payment, until CONTRACTOR has complied with any outstanding and unsatisfied request by CITY for audits under this Section. Upon CONTRACTOR'S compliance with this Section, any monies withheld pursuant to this Paragraph solely due to CONTRACTOR'S failure to permit an audit requested by CITY shall be released to CONTRACTOR.

I. CONTRACTOR hereby consents and agrees that any failure by CONTRACTOR to provide access to records as provided in A through G of this Section shall be specifically enforceable by issuance of a preliminary and/or permanent mandatory injunction by a court of competent jurisdiction based on affidavits submitted to such court, without the necessity of oral testimony, to compel CONTRACTOR to permit access and inspection of the records or to require delivery of the records to CITY for inspection.

END OF SECTION

SECTION 01351
ESCROW BID DOCUMENTS

1.1 THE REQUIREMENT

A. Scope:

1. This Article requires that the three (3) low bidders submit, within the specified time after receipt of bids, one (1) copy of all documentary information including, but not limited to, electronic files generated in preparation of bid prices for this project. This material is hereinafter referred to as "Escrow Bid Documents". The Escrow Bid Documents of the CONTRACTOR will be held in escrow for the duration of the Contract.
2. The successful Bidder agrees, as a condition of the award of the Contract, that the Escrow Bid Documents constitute all of the information used in preparation of the Bid, and that no other bid preparation information shall be considered in resolving disputes or claims. The successful bidder also agrees that nothing in the Escrow Bid Documents shall change or modify the terms or conditions of the Contract Documents.

B. Ownership:

1. The Escrow Bid Documents are, and shall always remain, the property of the CONTRACTOR, subject to joint review by the CITY and the CONTRACTOR as provided herein. The Escrow Bid Documents are proprietary and secret information belonging to the CONTRACTOR and exempt from the Federal Freedom of Information Act, California Public Records Act, and the Los Angeles CITY Freedom of Information Act.
2. The CITY stipulates and expressly acknowledges that the Escrow Bid Documents, as defined herein, constitute trade secrets. This acknowledgment is based on the CITY'S express understanding that the information contained in the Escrow Bid Documents is not known outside the Bidder's business, is known only to a limited extent and only to a limited number of employees of the Bidder, is safeguarded while in the Bidder's possession, is extremely valuable to the Bidder and could be extremely valuable to the Bidder's competitors by virtue of it reflecting the Bidder's contemplated techniques of construction. The CITY acknowledges that the Bidder expended substantial sums of money in developing the information included in the Escrow Bid Documents and further acknowledges that it would be difficult for a competitor to replicate the information contained therein. The CITY further acknowledges that the Escrow Bid Documents and the information contained therein are made available to the CITY only because such action is an express prerequisite to award of the Contract. The CITY acknowledges that the Escrow Bid Documents include a compilation of information used in the Bidder's business, intended to give the Bidder an opportunity to obtain an advantage over competitors who do not know of or use the contents of the documentation. The CITY further agrees to safeguard the Escrow Bid Documents, and all information contained therein, against disclosure to the fullest extent permitted by law.

C. Purpose:

1. The purpose of the Escrow Bid Documents procedure is intended to create a spirit of cooperation in an atmosphere of honesty and candor between the CITY and the CONTRACTOR.

2. Escrow Bid Documents will be used to assist in the negotiation of price adjustments and Change Orders and in the settlement of disputes and claims. They will not be used for pre-award evaluation of the CONTRACTOR'S anticipated methods of construction or to assess the CONTRACTOR'S qualifications for performing the WORK.

D. Format and Contents:

1. Bidders may submit Escrow Bid documents in their usual cost estimation format; a standard format is not required. It is not the intention of this Article to cause the Bidder extra work during the preparation of the Bid, but to ensure that the Escrow Bid Documents will be adequate to enable complete understanding and proper interpretation for their intended use. The Escrow Bid Documents shall be in English.
2. It is required that the Escrow Bid Documents clearly itemize the estimated costs of performing the WORK of each Bid item contained in the Bid schedule. Bid items should be separated into sub-items as required to present a complete and detailed cost estimate and allow a detailed cost review. The Escrow Bid Documents shall include all quantity takeoffs, crew, equipment, calculations of rates of production and progress, copies of quotations from Subcontractors and Suppliers, and memoranda, narratives, add/deduct sheets, and all other information used by the Bidder to arrive at the prices contained in the Bid. Estimated costs should be broken down into the Bidder's usual estimate categories such as direct labor, repair labor, equipment ownership and operation, expendable materials, permanent materials, and subcontract cost, as appropriate. Plant and equipment and indirect costs should be detailed in the Bidder's usual format. The CONTRACTOR'S reallocation of indirect costs, contingencies, markup and other items to each bid item shall be identified.
3. All estimates for items of Work that are based in whole or in part upon any baseline statements or information in the Geotechnical Baseline Report (GBR), shall clearly reference the baseline statements used. CONTRACTOR shall have no right to an adjustment in the Contract Price or the Contract Completion Date (due to Differing Site Conditions of the General Conditions) unless such baseline statements have been clearly identified in the Escrow Bid Documents.
4. All cost shall be identified. For bid items amounting to less than $10,000, estimated units costs are acceptable without a detailed cost estimate, provided that labor, equipment, materials, and subcontracts, as applicable, are included and provided that indirect costs, contingencies, and markups, as applicable, are allocated. Bid documents provided by the CITY need not be included in the Escrow Bid Documents unless needed to comply with the following requirements.

E. Submittal:

1. The Escrow Bid Documents shall be submitted to the Board of Public Works Office, by the three (3) low Bidders, in sealed containers, within forty-eight (48) hours after the time for receipt of Bids. The containers shall be clearly marked on the outside with the Bidder's name, date of submittal, project name and the words "Escrow Bid Documents".
2. The Escrow Bid Documents shall be accompanied with the certification (a sample is included), signed by an individual authorized by the Bidder to execute Bids, stating that the material in the Escrow Bid Documents constitutes all the documentary information used in preparation of the Bid and that the Bidder has personally examined the contents of the Escrow Bid Documents container and has found that the documents in the container are complete.

BID DOCUMENTATION CERTIFICATION

THE UNDERSIGNED HEREBY CERTIFIES THAT THE BID DOCUMENTATION CONTAINED HEREIN CONSTITUTES ALL OF THE INFORMATION USED IN PREPARATION OF THE BID AND THAT I HAVE PERSONALLY EXAMINED THESE CONTENTS AND HAVE FOUND THAT THIS BID DOCUMENTATION IS COMPLETE.

SIGNATURE: _____

NAME:_____

TITLE: _____

FIRM: _____

DATE: _____

3. Within 14 Calendar days following the receipt of bids, the Escrow Bid Documents of the apparent successful Bidder will be examined, organized and inventoried by representatives of the CITY, together with members of the CONTRACTOR'S staff who are knowledgeable of how the Bid was prepared. This examination is to ensure that the Escrow Bid Documents are legible and complete. It will not constitute approval of proposed construction methods, estimating assumptions, or interpretations of Contract Documents. Examination will not alter any condition or term of the Contract.
4. If all the documentation required in Section D, "Format and Contents", has not been included in the original submittal, additional documentation shall be submitted, at the CITY'S sole discretion, within twenty-four (24) hours after the original inventory and examination of the Escrow Bid Documents and prior to award of the Contract. The detailed breakdown of estimated costs shall be reconciled and revised, if appropriate, by agreement between the CONTRACTOR and the CITY before making the award. If the Contract is not awarded to the apparent successful Bidder, the Escrow Bid Documents of the Bidder next to be considered for award shall be processed as described above.
5. Submission of complete Escrow Bid Documents is an essential element of the Bidder's responsiveness and a prerequisite to a Contract award. Failure to provide the necessary Escrow Bid Documents within the forty-eight (48) hour time limit, may render the Bid non-responsive. Escrow Bid Documents of the unsuccessful Bidders will be returned following award of the Contract.
6. If any Bidder's Bid is based on subcontracting any part of the WORK, each Subcontractor, whose total subcontract price exceeds five percent (5%) of the total Contract price bid by the Bidder, shall provide separate Escrow Bid Documents to be included with those of the Bidder. Such documents shall be opened and examined in the same manner and at the same time as the examination described above for the apparent successful Bidder.
7. If the CONTRACTOR wishes to subcontract any portion of the WORK after award, the CITY retains the right to require the CONTRACTOR to submit Escrow Bid Documents from the Subcontractor before the subcontract is approved.

F. Storage:

1. The Escrow Bid Documents will be placed in lockable container, with provisions for the Contractor and the City to provide separate locks, for the life of the Contract, and stored in a mutually agreeable location at or near the jobsite. The cost of storage will be paid by the CITY.

G. Examination:

1. The Escrow Bid Documents shall be examined by both the CITY and the CONTRACTOR, at any time deemed necessary by either the CITY or the CONTRACTOR, to assist in the negotiation of price adjustments and Change Orders or the settlement of disputes and claims.
2. Examination of the Escrow Bid Documents is subject to the following conditions:

    a. As trade secrets, the Escrow Bid Documents are proprietary and confidential.
    b. The CITY and the CONTRACTOR shall each designate, in writing to the other party and within ten (10) days after execution of the Contract, representatives who are authorized to examine the Escrow Bid Documents, with the exception of the initial reviewers as specified in section 1.1.E.3 above. No other person shall have access to the Escrow Bid Documents.
    c. Access to the Escrow Bid Documents may take place only in the presence of duly designated representatives of both the CITY and the CONTRACTOR.

3. The Escrow Bid Documents at all times remain the property of the CONTRACTOR and the CITY will take all reasonable steps necessary to protect confidentiality.

H. Final Disposition:

1. The Escrow Bid Documents will be returned to the CONTRACTOR at such time as the following conditions have been satisfied.

    a. The Contract has been completed.
    b. Final payment has been issued by the CITY.
    c. All litigation has been completed, and a written agreement has been executed between the CITY and the CONTRACTOR that no further litigation will be made.
    d. The Board of Public Works has accepted the project.

2. The Escrow Bid Documents will be sealed and promptly returned to the CONTRACTOR by the party in charge of the Escrow Bid Documents. Reproduction of any portion of the Escrow Bid Documents will not be permitted at any time without the written permission of the CONTRACTOR.

END OF SECTION

SECTION 01353
OPPORTUNITY TO PARTNER

1.1 THE REQUIREMENT

A. The successful bidder will have the opportunity to enter into a cooperative partnership agreement with the CITY for the contract. Participation in Partnering is highly encouraged. Partnering will create a framework for conflict resolution, improved communications, reduced litigation, and cost containment. During the partnering session, all parties will participate in developing an Issue Resolution Ladder, which will help establish and communicate the chain of command in each organization (See Attachment 01353–A1). Each level of the organization is expected to work cooperatively to resolve issues. However, if issues cannot be resolved in a timely manner or are beyond the authority granted that level, each party understands that the issue must be elevated to the next level.

B. The objective of this Partnering agreement would be effective completion of the Work on time and to achieve a standard of quality that would be a source of pride to both the CITY and the CONTRACTOR. Partnering is intended only to establish an environment of cooperation between the parties and will not affect the terms of this contract.

C. An initial one (1) day training session is recommended to initiate the partnership agreement. The cost of this training, excluding staff labor charges, will be paid from a fixed cash allowance that has been allocated as the bid item Opportunity to Partner in the SCHEDULE OF WORK AND PRICES. No Overhead and Profit shall be added to the cost of the training. If the total cost of the partnering training differs from the amount set forth in the SCHEDULE OF WORK AND PRICES, the Contract Price shall be adjusted by a Change Order for the difference between the total actual cost and the amount included in the Bid, as an additional amount due the CONTRACTOR or a credit to the CITY, as appropriate.

D. The third-party partnering moderator shall be chosen jointly by the Engineer and the Contractor. The City or Contractor may suggest the use of certain moderator; however, each party shall have the right to agree or deny the use of the suggested moderator.

END OF SECTION

(SEE ATTACHMENT)

ATTACHMENT TO SECTION 01353

Attachments to General Requirements Section 01353 consists of one (1) document, as follows:

ATTACHMENT NUMBER	TITLE OF ATTACHMENT	NUMBER OF PAGES IN THIS ATTACHMENT
01353-A1	Issue Resolution Ladder – Line Management Form	1

City of Los Angeles, Department of Public Works
Bureaus of Engineering and Contract Administration

Contractor: **{name}**

Project Title: **MACARTHUR LAKE STORMWATER CAPTURE PROJECT**

Issue Resolution Ladder – Line Management

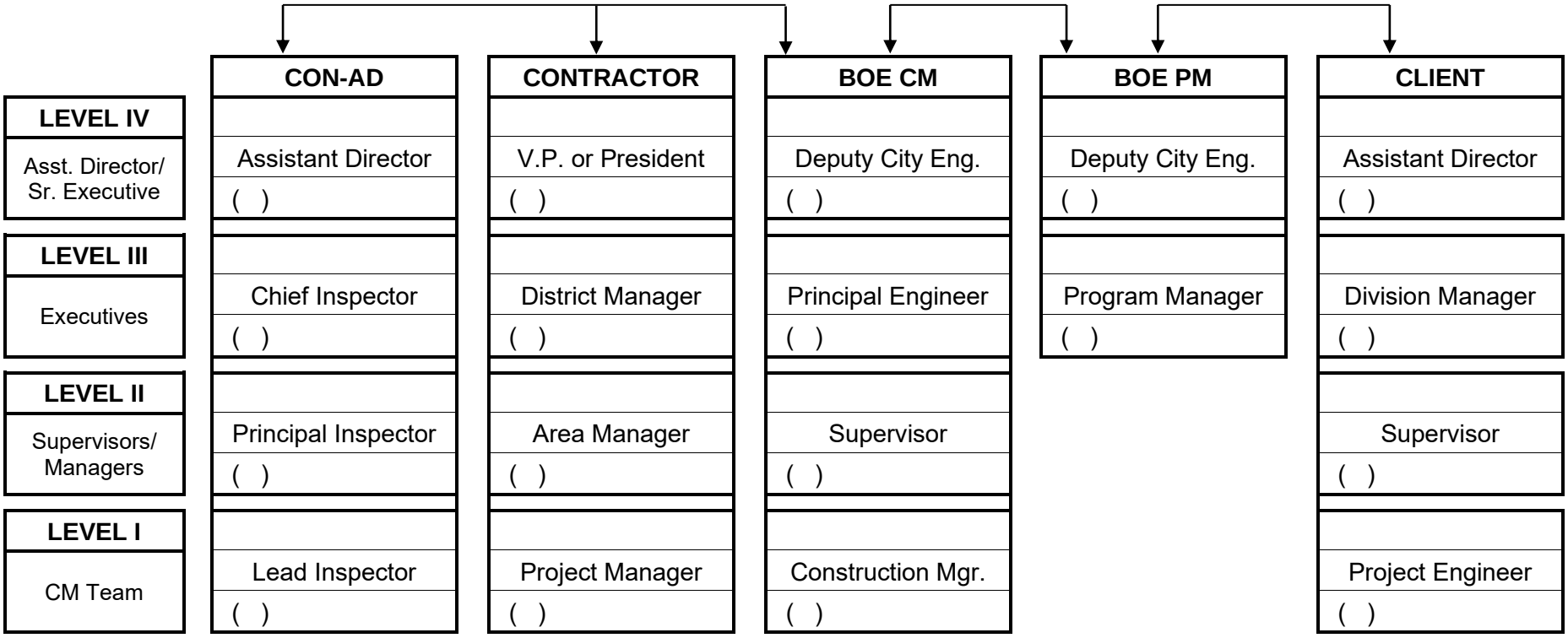

THIS PAGE INTENTIONALLY LEFT BLANK

SECTION 01410
REGULATORY REQUIREMENTS

PART 1 - GENERAL

1.1 SUMMARY OF WORK

A. Building Codes and Regulations:

1. The CONTRACTOR shall perform the Contracted Work in accordance with the requirements of the latest edition of the Los Angeles City Building Codes and Amendments and all other regulations, laws, and ordinances, even though such requirements are not specifically mentioned in the Project Manual or shown on the Contract Drawings.
2. When the Work required by the Drawings and Project Manual are in conflict with any such law or ordinance, the CONTRACTOR shall notify the ENGINEER. The CONTRACTOR shall comply with the more stringent requirements, unless notified by the ENGINEER and the CONTRACTOR shall not proceed with the Work until the ENGINEER has so ordered.
3. This Section specifies procedural and administrative requirements for compliance with governing regulations, codes, and standards imposed upon the Contracted Work. These requirements include obtaining permits, licenses, inspections, releases, and similar documentation, as well as payments, statements, and similar requirements associated with the regulations, codes, and standards.

B. Related Documents:

1. Contract Documents: Work of this Section shall comply with all the Contract Documents, including General Conditions and Supplementary Conditions and other Sections, DIVISION 1 - GENERAL REQUIREMENTS.

1.2 CODES AND REGULATIONS

A. The design and construction of this Project have been selected and depicted on the Contract Documents in compliance with all applicable codes, which govern the various work, materials, devices, equipment, systems, and procedures in effect at the time the Project is issued to bid by the Board of Public Works. These include, but are not limited to, the following:

1. CITY of Los Angeles Building Code and Amendments, latest edition.
2. Los Angeles CITY "Standard Specifications for Public Works Construction", (The Green Book).
3. CAC Title 24.
4. California Building Code (CBC).
5. CAL/OSHA (Occupational and Safety Code).
6. California State Architectural Barrier's Law (CAL/ABL).
7. California State Fire Marshall requirements.
8. California Electrical, Plumbing and Mechanical Codes.
9. Los Angeles CITY Fire Code.
10. State Energy Standards Title 24.
11. Americans with Disabilities Act (ADA).
12. Los Angeles CITY Electrical, Plumbing and Mechanical Codes and Amendments, latest editions.

13. Los Angeles CITY Elevator Code, C.A.C. 3041 and Barclay's California Code of Regulation (Sub-article E620).
14. Los Angeles CITY Municipal Code, latest edition.
15. Uniform Building Code (UBC).
16. All other Codes and Regulations that may be noted in the Technical Sections of the Project Manual.

B. The procedure followed by the ENGINEER has been to contact governing authorities, where necessary, to obtain information needed for the purpose of preparing Contract Documents, recognizing that such information may or may not be of significance in relation to the CONTRACTOR'S responsibilities for performing the Work. Direct contact, by the CONTRACTOR, with such governing authorities can be made for necessary information and decisions that have a bearing on the performance of the Work, if necessary.

C. CONTRACTOR shall be familiar with all codes, regulations and all necessary procedures to obtain and pay for all permits, arrange all inspections, and secure necessary releases or sign-offs, which are prerequisite to any utility service connection work.

D. When conflict or violation of law or codes are found during any inspection by the governing agencies, the CONTRACTOR shall request such allegation of code conflict or violation, or Request of Correction to be on a written form from the governing agencies. The CONTRACTOR shall furnish the ENGINEER and the INSPECTOR each a duplicate copy of such written notice for review.

PART 2 - PRODUCTS (NOT APPLICABLE)

PART 3 - EXECUTION

3.1 PERMIT INFORMATION

A. CONTRACTOR shall contact the ENGINEER to obtain the proper CITY (owner) information to be used in the manifest or notification prior to start of any abatement work.

B. All information used by the CONTRACTOR including the CITY'S (Owner's) and CITY authorized representative's names, addresses and telephone numbers shall be consistent with the information shown on the building permit and plan-check applications obtained by the CITY.

END OF SECTION

SECTION 01411
CONFINED SPACE ENTRY

1.1 THE REQUIREMENT

A. Confined Space Entry Program:

1. The CONTRACTOR shall be responsible for implementing, administering and maintaining a confined space entry program (CSEP) in accordance with Sections 5156, 5157 and 5158, Title 8, CCR.
2. Prior to starting the Work, the CONTRACTOR shall prepare and submit its comprehensive CSEP to the ENGINEER. The CSEP shall address all potential physical and environmental hazards and contain procedure for safe entry into confined spaces, including, but not limited to, the following:

    a. Training of personnel.
    b. Purging and cleaning the space of materials and residue.
    c. Potential isolation and control of energy and material inflow.
    d. Controlled access to the space.
    e. Atmospheric testing of the space.
    f. Ventilation of the space.
    g. Special hazards consideration.
    h. Personal protective equipment.
    i. Rescue plan provisions.

3. The CONTRACTOR'S submittal shall include the names of its personnel, including Subcontractor personnel, assigned to the project, who will have CSEP responsibilities, their CSEP training, and their specific assignment and responsibility in carrying out the CSEP.

B. Permit-Required Confined Spaces:

1. Entry into permit-required confined spaces, as defined in Section 5157, Title 8, CCR, may be required as a part of the Work. All maintenance holes, tanks, vaults, pipelines, excavations, or other enclosed or partially enclosed spaces shall be considered permit-required confined spaces until the pre-entry procedures demonstrate otherwise. The CONTRACTOR shall implement a permit space program prior to performing any Work in a permit-required confined space. A copy of the permit shall be available at all times for review by CONTRACTOR and CITY personnel at the Worksite.

C. Payment:

1. Payment for implementing, administering, and providing all equipment and personnel to perform the CSEP shall be included in the bid items for which the CSEP is required.

END OF SECTION

THIS PAGE INTENTIONALLY LEFT BLANK

SECTION 01420
UNITS OF MEASURE

1.1 THE REQUIREMENT

A. General:

1. The International System of Units, also referred to as SI or the metric system, is the principal measurement system in these specifications and shall be used for construction, unless otherwise stated in the Contract documents. U.S. Standard Measures, also called U.S. Customary System, are included in parenthesis. SI units and U.S. Standard Measures in parenthesis may or may not be exactly equivalent. If U.S. Standard Measures are specified for use in the contract documents, then all values used for construction shall be U.S. Standard Measures shown in parenthesis. However, certain material specifications and test requirements contained herein use SI units specifically and conversions to U.S. Standard Measure have not been included in these circumstances. When U.S. Standard Measures are not included in parenthesis, then the SI units shall control.
2. Reference is also made to ASTM E 380 for definitions of various units of the SI system and a more extensive set of conversion factors.

B. Units of Measure and Their Abbreviations (abbreviations noted within parentheses):

U.S. Customary Unit (Abbreviations)	Equal to	SI Unit (Abbreviations)
1 mil (= 0.001 in)	=	25.4 micrometer (µm)
1 inch (in)	=	25.4 millimeter (mm)
1 inch (in)	=	2.54 centimeter (cm)
1 foot (ft)	=	0.3048 meter (m)
1 yard (yd)	=	0.9144 meter (m)
1 mile (mi)	=	1.6093 kilometer (km)
1 square foot (ft^2)	=	0.0929 square meter (m^2)
1 square yard (yd^2)	=	0.8361 square meter (m^2)
1 cubic foot (ft^3)	=	0.0283 cubic meter (m^3)
1 cubic yard (yd^3)	=	0.7646 cubic meter (m^3)
1 acre	=	0.4047 hectare (ha)
1 U.S. gallon (gal)	=	3.7854 Liter (L)
1 fluid ounce (fl. oz.)	=	29.5735 milliliter (mL)
1 pound mass (lb) (avoirdupois)	=	0.4536 kilogram (kg)
1 ounce mass (oz)	=	0.0283495 kilogram (kg)
1 Ton (= 2,000 lb avoirdupois)	=	0.9072 Tonne (= 1,000 kg)
1 Poise	=	0.1 pascal second (Pa · s)
1 centistoke (cs)	=	1 square millimeters per second (mm^2/s)
1 pound force (lbf)	=	4.4482 Newton (N)
1 pound per square inch (psi)	=	6.8948 Kilopascal (kPa)
1 pound force per foot (lbf/ft)	=	1.4594 Newton per meter (N/m)
1 foot-pound force (ft-lbf)	=	1.3558 Joules (J)
1 foot-pound force per second (ft-lbf/s)	=	1.3558 Watt (W)
1 part per million (ppm)	=	1 milligram/liter (mg/L)

C. Temperature Units and Their Abbreviations (abbreviations noted within parentheses):

Degree Fahrenheit (Abbreviation: °F)	**Degree Celsius (Abbreviation: °C)**
°F = (1.8 x °C) + 32	°C = (°F – 32)/1.8

D. SI Units Commonly Used in Both Systems and their Abbreviations (abbreviations noted within parentheses):

1 Ampere (A)
1 Volt (V)
1 Candela (cd)
1 Lumen (lm)
1 second (s)

E. Common Metric Prefixes and Their Abbreviations (abbreviations noted within parentheses):

kilo (k)	10^{3}
centi (c)	10^{-2}
milli (m)	10^{-3}
micro (μ)	10^{-6}
nano (n)	10^{-9}
pico (p)	10^{-12}

END OF SECTION

SECTION 01421
SYMBOLS

1.1 THE REQUIREMENT

A. The symbols as shown shall mean:

Symbol	Definition
Δ	Delta, the central angle or angle between tangents
∠	Angle
%	Percent
'	Feet or minutes
"	Inches or seconds
#	Number
/	Per or (between words)
°	Degree
ℙ	Property line
℄	Centerline
𝕊	Survey line or station line

END OF SECTION

THIS PAGE INTENTIONALLY LEFT BLANK

SECTION 01430
MANUFACTURER'S FIELD SERVICES

1.1 THE REQUIREMENT

A. Prior to the startup of the facility, an experienced, competent, and authorized representative of the manufacturer of each item of equipment incorporated into the Work, for which field services are indicated in specified equipment sections, shall visit the site of the Work and inspect, check, adjust if necessary, and approve the equipment installation. In each case, the representative shall revisit the Jobsite as often as necessary until all trouble is corrected and the equipment installation and operation are satisfactory in the opinion of the ENGINEER. Each manufacturer's representative shall furnish to the ENGINEER and the INSPECTOR a written report certifying that the equipment has been properly installed, and lubricated; is in accurate alignment; is free from any undue stress imposed by connecting piping or anchor bolts; and has been operated under full load conditions and that it operated satisfactorily. All costs for these services shall be included in the CONTRACTOR'S Bid.

END OF SECTION

THIS PAGE INTENTIONALLY LEFT BLANK

SECTION 01451
APPROVAL OF ELECTRICAL EQUIPMENT

1.1 THE REQUIREMENT

A. All electrical equipment, control panels and cabinets, components, devices, etc. shall be listed by the Underwriters Laboratories (UL) or approved by a testing laboratory recognized by the CITY or approved by the CITY'S Department of Building and Safety Electrical Testing Lab (ETL). All costs incurred for obtaining these approvals shall be borne by the CONTRACTOR.

B. The CONTRACTOR shall contact the ETL (Telephone 213-485-2376) for cost, schedule, list of the latest approved recognized laboratories and other additional information.

C. Shop Drawings submitted by the CONTRACTOR for all electrical equipment and products shall have prior approval of one of the laboratories stated above, or the drawings will be rejected. No electrical equipment or materials shall be delivered to the Jobsite without UL listing, or a CITY recognized laboratory approval, or ETL approval. Shop Drawings approved by the ENGINEER shall in no way invalidate the requirements set forth in paragraph A.

D. UL listing of individual components or devices installed in control panels and cabinets shall not be construed as UL listing or approval of the assembled control panel or cabinet. The CONTRACTOR shall be solely responsible for determining the approval process time necessary for obtaining the approval of these items such that the project schedule can be maintained. The CONTRACTOR shall submit to the ENGINEER for information a detailed schedule, listing all such items requiring approval, the proposed dates of their submittal, the anticipated approval process time, and the expected date of delivery of these items.

E. The CONTRACTOR shall complete the Procedures and Sign Off Log for all Electrical Intertie with the Plant Form Attachment 01451-A. It shall include all the supporting documents required by the form and shall be signed and dated.

END OF SECTION

(SEE ATTACHMENT)

ATTACHMENTS TO SECTION 01451

Attachments to General Requirements Section 01451 consists of two (2) document, as follows:

ATTACHMENT NUMBER	TITLE OF ATTACHMENT	NUMBER OF PAGES IN THIS ATTACHMENT
01451-A1	Procedures and Sign Off Log for Electrical Intertie with the Plant	2
01451-A2	Electrical Summary Data Form	1

PROCEDURES AND SIGN OFF LOG
FOR ELECTRICAL INTERTIE WITH THE PLANT

PROJECT TITLE:_____

CMS PROJECT ENGINEER:_____

PLANT LIASON:_____

ELECTRICAL ENGINEER:_____

ELECTRICAL CONTRACTOR:_____

POWER SOURCE:_____ VOLTS:_____ PHASE:_____

ACTIVITY		SIGN OFF AND DATE				REMARKS
		CM Office	CON. AD	CONTRACTOR	PLANT	
1	Plant to verify receiving the O&M, training and spare parts list.					
2	Coordinate with DWP, if needed.					
3	Attach most recent single line diagram for the facility under test.					
4	Attach As Built or most recent relay settings.					
5	Verify the coordination study includes the current settings for the existing protective devices.					
6	Set and calibrate all protective devices as per approved coordination study.					
7	Satisfactory functional test all tripping interlocking of breakers as per control schematics. Attach lists of all tested breakers.					

ACTIVITY		SIGN OFF AND DATE				REMARKS
		CM Office	CON. AD	CONTRACTOR	PLANT	
8	Satisfactory HI-POT test of all cables 5KV and above as per latest version of IEEE Std. 400 and other standards listed per Specs. Attach test reports.					
9	Satisfactory megger test all 600 V rated wires, attach test reports.					
10	Identify all cables and wires terminations as per Specifications.					
11	Set, calibrate and test pilot wire relays.					
12	Set, test and calibrate all Main and Feeder Breakers as per coordination studies or recommended values.					
13	Obtain B&S sign off.					
14	Obtain ConAd sign off.					

Plant Approval By:_____ **Date:**_____

ELECTRICAL SUMMARY
DATA FORM

EQUIPMENT ITEM: _____

EQUIPMENT COST: _____

EQUIPMENT SUPPLIER: _____

COMPONENT INFORMATION: NAMEPLATE DATE **MANUFACTURER:**	
CITY IDENTIFICATION NUMBER:	**EQUIPMENT SERIAL NUMBER:**
EQUIPMENT MODEL DESIGNATION:	**TYPE:**
FRAME SIZE:	**INTERRUPTING RATINGS:**
POWER (KV/KVA):	**PRIMARY VOLTAGE:**
SECONDARY VOLTAGE:	**AMPERAGE:**
PHASE: **HERTZ:**	**INPUT:**
OUTPUT:	**DEGREES C RISE:**
PERCENT IMPEDANCE:	**FUSE SIZE/QUALITIES:**
PHASE: **HERTZ:**	**SERVICE FACTOR**
COMMENTS:	

THIS PAGE INTENTIONALLY LEFT BLANK

SECTION 01452
INSPECTION OF THE WORK

1.1 THE REQUIREMENT

A. Whenever the CONTRACTOR intends to carry on the Work of this Contract on a Saturday, Sunday, or holiday, or more than eight (8) hours a day on Monday through Friday, or any variation in the time of the workday as set forth in the GENERAL CONDITIONS, length of the workday and work week, notification shall be given to the INSPECTOR and the ENGINEER of such intention at least forty-eight (48) hours in advance so that inspection may be arranged. No Work shall be allowed during these times without the approval of the INSPECTOR and no demolition will be permitted on Saturdays, Sundays, or holidays without the prior approval of the Board. All CITY inspection required by the CONTRACTOR on holidays, weekends, and overtime for the sole convenience of the CONTRACTOR shall be accomplished at the sole expense of the CONTRACTOR by issuance of a deductive Change Order.

B. The Work shall be conducted under the general observation of the ENGINEER and shall be subject to inspection by the INSPECTOR to ensure compliance with the requirements of the Contract Documents. Such inspection may include mill, plant, shop, or field inspection, as required. The INSPECTOR shall be permitted access to all parts of the Work, including plants where materials or equipment are manufactured or fabricated. All materials and articles furnished by the CONTRACTOR shall be subject to inspection and no materials or articles shall be used in the Work until they have been inspected and accepted by the INSPECTOR.

C. No Work shall be backfilled, buried, cast in concrete, hidden or otherwise covered until it has been inspected by the INSPECTOR, and other Agencies for which a permit is required. Whenever the CONTRACTOR is ready to backfill, bury, cast in concrete, hide, or otherwise cover any Work under the Contract, the CONTRACTOR shall notify the INSPECTOR not less than forty-eight (48) hours in advance to request inspection before beginning any such Work of covering. Failure of the CONTRACTOR to notify the INSPECTOR at least forty-eight (48) hours in advance of any such inspections shall be cause for the INSPECTOR to require a sufficient delay in the progress of Work to allow time for such inspections and any remedial or corrective work required, and all costs of such delays, including its effect upon other portions of the work, shall be borne by the CONTRACTOR. Any Work so covered in the absence of inspection shall be subject to uncovering at the sole expense of the CONTRACTOR. Where uninspected Work cannot be uncovered, such as in concrete cast over reinforcing steel, all such Work shall be subject to demolition, removal, and reconstruction under proper inspection, and no additional payment will be allowed therefor.

D. The presence of the ENGINEER or the INSPECTOR shall not relieve the CONTRACTOR of the responsibility for the proper execution of the Work in accordance with all requirements of the Contract Documents. Compliance is a duty of the CONTRACTOR and said duty shall not be avoided by any act or omission on the part of the ENGINEER or the INSPECTOR. If the CONTRACTOR fails to replace any defective or damaged Work or material after reasonable notice, the ENGINEER may withhold progress payment for the Work or material, reserve the right to notify the CONTRACTOR'S Bond and Insurance Companies, and/or may cause such Work or materials to be replaced. The replacement shall be deducted from the amount to be paid to the CONTRACTOR, otherwise the CONTRACTOR shall pay the CITY if there remains insufficient or no amount to be paid by the CITY to the CONTRACTOR.

E. The INSPECTOR shall have the right, at all times and places, to reject any articles or materials to be furnished hereunder which, in any respect, fail to meet the requirements of these specifications, regardless of whether the defect in such articles or materials are detected at the point of manufacture or after completion of the Work at the site. If the ENGINEER or the INSPECTOR, through an oversight or otherwise, has not rejected materials or work which is defective or which is contrary to the specifications, such material, no matter in what stage or condition of manufacture, delivery, or erection, may be rejected by the INSPECTOR upon discovery. The CONTRACTOR shall promptly remove rejected articles or materials from the site of the Work after notification of rejection. All costs of removal and replacement of rejected articles or materials as specified herein shall be borne by the CONTRACTOR.

F. At the completion of Work, after completion of all corrections, a final inspection will be made by the INSPECTOR, the ENGINEER, and the CONTRACTOR, as applicable. The INSPECTOR will provide a Final Inspection Correction List itemizing all work necessary to complete the Project satisfactorily.

G. When the correction work is found to be in compliance with the Contract Documents, the construction Work will be considered complete, and the Contract time will stop. The CONTRACTOR shall proceed with the maintenance work if required by the Contract. If the correction work is found to be non-compliant with the Contract Documents, the Contract time shall be continued to be assessed until the correction is satisfactorily made and accepted by the CITY.

H. The CONTRACTOR shall notify the INSPECTOR and ENGINEER, for the inspection of the Maintenance Work, as specified in the Contract Documents and CONTRACTOR'S maintenance schedule. CONTRACTOR shall make all necessary corrections or replacements in accordance with the Drawings and Project Manual and as directed by the INSPECTOR and/or ENGINEER. The CONTRACTOR shall notify the INSPECTOR and ENGINEER of the final inspection of the Maintenance Work. The CITY may extend the maintenance period if the Maintenance Work is found unsatisfactory or defective.

I. If the Maintenance Work and necessary correction(s) are satisfactorily completed, and the guarantee faithful performance bond is submitted for the remaining guarantee and warranty provisions, the ENGINEER shall make final payment and notify the BOARD for project acceptance.

END OF SECTION

SECTION 01453
SAMPLING, TESTING AND FABRICATION INSPECTION

1.1 THE REQUIREMENT

A. General:

1. All materials and fabricated articles furnished by the CONTRACTOR shall be subject to inspection and testing and no materials or fabricated articles shall be incorporated into the Work until they have been inspected and accepted by the INSPECTOR. The CONTRACTOR shall ensure that all items requiring shop inspection are inspected at their source by the INSPECTOR or by an independent inspection or testing laboratory (IITL) that has been approved by the INSPECTOR.
2. Fabrication shall be subject to inspection by the INSPECTOR, to ensure strict compliance with the requirements of the Contract Documents. Such inspection shall include mill, plant, shop or field inspection, as required. The INSPECTOR shall be permitted access to all parts of the Work, including plants where materials or equipment are manufactured or fabricated. When a third-party INSPECTOR is approved, monthly meetings may be scheduled with the INSPECTOR at the manufacturing facility to review the progress of the Work and the inspection activities. The INSPECTOR will determine the number of trips based on the manufacturing schedule for the material or fabricated article(s). The CONTRACTOR shall include in the Bid all costs associated with these inspections, except for the costs for CITY personnel as set forth herein which shall be reimbursed under the Bid Item ALLOWANCE FOR CITY INSPECTION, if provided in the SCHEDULE OF WORK AND PRICES.
3. All fabricated items shall be fabricated from Shop Drawings, which have been submitted to the ENGINEER and approved in accordance with SUBMITTALS of the GENERAL REQUIREMENTS. Shop inspection shall be provided on all materials and/or equipment so designated on the CONTRACTOR'S approved Shop Drawings or Contract Documents. The CONTRACTOR shall provide approved Shop Drawings and the corresponding Contract Specification to the INSPECTOR or IITL for use in the inspection and testing of the items to be fabricated.
4. Any item requiring inspection that is delivered to the job site without having been inspected and approved by the Bureau of Contract Administration or an approved third-party inspection agency will be rejected by the Project Inspector. The BCA Materials Control Group will not perform any inspection at the job site. It is the Prime CONTRACTOR'S responsibility to ensure that all items requiring shop inspection are inspected at their source by the BCA Materials Control Group, or by an inspection or testing laboratory that has been approved by the BCA Materials Control Group. The City shall be held harmless for any delays resulting from the CONTRACTOR'S or fabricator's failure to obtain the required inspections.
5. Prior to any fabrication, there shall be a Prefabrication Meeting either at the fabricator's location or via telephonic conference. A representative of the CITY and the IITL, if retained, the Prime CONTRACTOR, the fabricator's plant superintendent and the fabricator's quality control person, shall be present at the Prefabrication Meeting. The items to be discussed are the required inspections, tests and reports, based on the approved Shop Drawings and the corresponding Contract Specifications. The IITL shall take minutes of the pre-fabrication meeting and distribute the same to the individuals in attendance. The IITL shall submit an inspection plan to the INSPECTOR for approval two (2) weeks prior to

the Prefabrication Meeting. The CONTRACTOR is directed to notify the INSPECTOR and the ENGINEER three (3) weeks in advance of the date and time of the Prefabrication Meeting. The CONTRACTOR shall include in the Bid all costs associated with these meetings except for the costs for CITY personnel as set forth herein which shall be reimbursed under the Bid Item ALLOWANCE FOR CITY INSPECTION, if provided in the SCHEDULE OF WORK AND PRICES.

6. If a Bid Item ALLOWANCE FOR CITY INSPECTION has been included in the SCHEDULE OF WORK AND PRICES in the Bid Proposal, this allowance shall only be used to reimburse the CONTRACTOR for the cost of CITY inspection and travel requirements, as set forth herein, and shall not be used for any portion of the costs of the CONTRACTOR'S independent third-party INSPECTOR or inspection laboratory. Reimbursement of approved expenses shall be made on the basis of original invoices and are not subject to markup for overhead and profit. If at the end of the Project, the total costs differ from the amount set forth in the SCHEDULE OF WORK AND PRICES, the Contract Price shall be adjusted by a Change Order for the difference between the total actual costs and the amount included in the Bid, as an additional amount due the CONTRACTOR or a credit to the CITY, as appropriate.
7. The CONTRACTOR shall coordinate all sampling, testing and fabrication inspections with the INSPECTOR and is responsible for maintaining the inspection schedules. Subject to the terms contained herein, costs for CITY personnel travel will be paid from the Bid item ALLOWANCE FOR CITY INSPECTION. If the scheduled inspection is postponed or delayed by the CONTRACTOR, through no fault of the CITY, and CITY personnel are required to extend their travel duration resulting in additional travel costs, these increased costs, including per diem travel allowances, shall be borne by the CONTRACTOR and are not eligible for payment from the Bid item ALLOWANCE FOR CITY INSPECTION.
8. In addition to the approval of the Bureau of Contract Administration, approval may be required from the Department of Building and Safety, Materials Control Section, for certification of both the manufacturer of structural items/materials and/or the testing laboratory/inspection company. For certification information, contact:

   Senior Building Inspector
   Materials Control section
   Dept. of Building and Safety
   Telephone: (213) 482-0388

B. Samples And Test Specimens:

1. Samples and test specimens required under these Specifications shall be furnished, prepared for testing, and delivered, at no cost to the CITY, in ample time for the completion of the necessary tests and analysis before said article or materials are to be used. The time and location of the delivery shall be designated by the INSPECTOR.
2. In addition to any other inspection or quality assurance provisions that may be specified, the ENGINEER or the INSPECTOR shall have the right to independently select, test, and analyze, at the expense of the CITY, additional test specimens of any or all of the materials to be used. Whenever any portion of the Work fails to meet the requirements of the Specifications, as shown by the results of independent testing or investigation, all costs of such independent inspection and investigation, and all costs of removal, correction, and

reconstruction or repair of any such Work, shall be borne solely by the CONTRACTOR.

3. The INSPECTOR may allow the manufacturer, fabricator, supplier, or Subcontractor to provide the results of tests from samples taken at the mill, factory, or warehouse. The INSPECTOR will accept the test reports provided that the following conditions are met:

    a. The Testing Agency was approved by the INSPECTOR prior to performing the tests, and that all necessary certifications were valid at the time the tests were performed.
    b. The tests were performed in conformity with the Specifications for the specified materials or items.
    c. The reports are made in the form of an affidavit specified hereinafter.

4. Whenever the approved independent testing laboratory or INSPECTOR takes samples of materials other than at the site, the deliveries to the site of materials represented by such samples shall be identified as specified for the specific material. The results of such tests shall be reported to the INSPECTOR in the form of affidavits attested to by the testing agency. Such affidavits shall furnish the following information with respect to the material sampled:

    a. Manufacturer's name and brand.
    b. Place of sampling.
    c. Sufficient information to identify the lot, group, bin, or silo from which the samples were taken.
    d. Amount of material in the lot sampled.
    e. Statement that the material has passed the requirements.
    f. Notarized signature and title of the person making the affidavit and the date of execution of the affidavit.

C. Shop Inspection And Testing:

1. Shop Inspection and/or Material Sampling and Testing are the sole jurisdiction and responsibility of the Inspector of Public Works through the Bureau of Contract Administration’s Materials Control Group. Shop Inspection and/or Material Sampling and Testing cannot be approved, waived, or otherwise altered by any other City Department, Bureau, Division, or individual. Shop Inspection required by this section is in addition to any inspections required by applicable building codes.
2. The CONTRACTOR is responsible for coordinating shop inspection with the INSPECTOR. The CONTRACTOR is to estimate the time required for Shop testing of the fabricated article(s) or equipment, and so inform the INSPECTOR. The Contractor is responsible for contacting the Bureau of Contract Administration, Materials Control Group, regarding scheduling for all Shop Inspection and/or Material Sampling and Testing. Please contact the Materials Control Supervisor at (213) 847-2442.
3. A final inspection by the INSPECTOR may be required prior to shipment. No fabricator or CONTRACTOR shall deliver fabricated materials to the project site without the approval of the BCA Materials Control Group.
4. Where the CONTRACTOR is specifically required by the Technical Specifications to demonstrate performance of major equipment prior to delivery, a testing procedure must be developed by the manufacturer and approved by the ENGINEER prior to scheduling the shop performance testing. Both the

INSPECTOR and the ENGINEER are required to witness the performance testing. The ENGINEER will evaluate performance-testing data and notify the INSPECTOR whether the equipment meets the performance requirements of the Contract. The INSPECTOR will be responsible for releasing the equipment for delivery to the Jobsite. This procedure will also apply to field performance testing required as a condition precedent to acceptance of the equipment as described under the PARTIAL ACCEPTANCE and FINAL ACCEPTANCE provision of the Contract.

5. Inspection at Locations Within Thirty (30) Miles from CITY:

   a. When the CONTRACTOR intends to purchase materials, fabricated products, or manufactured equipment from sources located within thirty (30) miles (48 km) of the geographical limits of the CITY, the CONTRACTOR shall notify the INSPECTOR at least 24 hours prior to the scheduled date of tests at all stages of manufacture to allow for arrangements specified herein.
   b. Except as otherwise provided in these Specifications, performance of the required sampling and tests will be under the direction of the INSPECTOR, from samples provided by the CONTRACTOR, and the cost of performing the test(s) will be borne by the CITY, except for the costs of any retests which show unsatisfactory results which shall be borne by the CONTRACTOR.

6. Inspection at Locations More Than Thirty (30) Miles From the CITY:

   a. When the CONTRACTOR intends to purchase materials, fabricated products, or equipment from sources located more than thirty (30) miles (48 km) outside the geographical limits of the CITY, an IITL approved by the INSPECTOR, shall be engaged by the CONTRACTOR, at the CONTRACTOR'S sole expense, to inspect the materials, equipment and/or process, unless the City elects to perform the inspection with BCA Materials Control Personnel. Approval of the IITL shall be obtained from the BCA Materials Control Group before producing any material or equipment. The IITL shall judge the materials and fabricated articles by the requirements of the Plans and Specifications and approved submittals. The IITL shall be accountable to the BCA Materials Control Group and shall provide written records of all inspections performed to the Group in a format approved by that Group. No equipment or material shall be shipped nor shall any processing, fabrication and/or treatment of such equipment or materials be done without the required inspection and approval by IITL. Approval by IITL shall not relieve the CONTRACTOR of its responsibility to comply with the Contract requirements. The City retains the right to perform inspection or testing at any remote site with City personnel. If the City exercises this right, the contractor will be required to pay for all costs associated with this inspection and testing, except the Inspectors' wages, unless reimbursement is provided under the bid item ALLOWANCE FOR CITY INSPECTION as listed in the SCHEDULE OF WORK AND PRICES.
   b. The CITY retains the right to perform inspection or testing at such remote sites with CITY personnel in lieu of a third-party inspector. In the event the CITY exercises this right, the CONTRACTOR shall administer travel arrangements as specified herein Paragraph C.10, CITY PERSONNEL TRAVEL REQUIREMENTS.

7. Inspection Outside Continental United States:

   a. Requirements and procedures for inspection and testing of materials, fabrication of products and equipment from sources outside the continental United States shall be the same (including the requirement for an accredited inspection agency and/or testing laboratory pre-qualified by the CITY Department of Building and Safety and approved by the INSPECTOR) as provided in the Paragraph C.7 SHOP INSPECTION & TESTING of this Section. In addition to the requirements of Paragraph C.10, City Personnel Travel Requirements, of this Section, the CONTRACTOR shall provide the following, the cost of which shall be reimbursed out of the ALLOWANCE FOR CITY INSPECTION item, if provided in the SCHEDULE OF WORK AND PRICES.

      (1) A minimum of five (5) calendar days hotel accommodation shall be required for each shop inspection visit made by the INSPECTOR.
      (2) A minimum advance notice of ten (10) working days shall be required for all hold points (mandatory) inspection.
      (3) The approximate rates for allowances given as a guideline in Paragraph C.10, City Personnel Travel Requirements, of this Section, shall be adjusted to match the rates in the foreign locality for similar types of facilities and amenities.

8. Third-Party Inspection Requirements:

   a. The proposed third-party inspection and/or testing company must gain approval by the INSPECTOR after award. This approval shall be obtained before producing any material or manufacturing any product or equipment. The approved inspection and/or testing agency shall not sublet or assign its work to any other agency.
   b. The approved third-party inspection and/or testing agency shall take direction from, and be responsible to, the INSPECTOR.
   c. The CONTRACTOR shall also comply with requirements regarding the Prefabrication Meeting as contained herein.
   d. The Work and activities of the third-party inspection and/or testing agency shall be monitored by the INSPECTOR during monthly meetings to ensure compliance with the Contract Documents.

9. Third Party Testing and Inspection Laboratory Approval Procedures:

   a. The INSPECTOR will approve third party inspection and/or testing agencies/laboratories. The City of Los Angeles has a contract only with the Prime CONTRACTOR. The City of Los Angeles has no Third-Party agreement with any subcontractor, plant, manufacturer, or fabricator. All are considered employees of the Prime CONTRACTOR and the Prime CONTRACTOR shall be responsible for their work. The Supervisor of the Materials Control Group of the Bureau of Contract Administration acts on behalf of the INSPECTOR of Public Works Therefore, all requests for the approval of a third-party inspection or testing company shall be from the Prime CONTRACTOR, typewritten on the Prime CONTRACTOR'S

letterhead, addressed to the Supervisor of the BCA Materials Control Group (213) 847-2442 as follows:

Bureau of Contract Administration
General Services Division
Materials Control Group
1149 S. Broadway, Suite 300
Los Angeles, CA 90015

One (1) duplicate copy of the request shall be sent to the ENGINEER.

b. The letter requesting approval of a third-party test lab or private inspection company shall contain all of the following information:

PROJECT DATA

(1) Complete title of the project.
(2) The project work order number.
(3) The approved submittal number(s) and a brief description of the item(s) to be inspected tested with their Specification Division and Section number.

PROPOSED INSPECTION

(1) Names of two (2) proposed testing laboratories or inspection companies.
(2) Addresses and telephone numbers of the proposed test labs/inspection companies.
(3) Contact person at the proposed test labs/inspection companies.
(4) Description and history of the proposed test laboratories/inspection companies.
(5) Resumes of at least two (2) or more inspectors (primary and alternate) who will perform the physical inspections.
(6) Samples of all inspection reporting documents utilized by the provider and a written description of the reporting methodology.

FABRICATOR DATA

(1) Company name, address, and telephone number of the actual production site for each fabricator.
(2) Contact person at each fabricator.
(3) Fabrication schedule.

c. The INSPECTOR will notify the CONTRACTOR by letter if the testing laboratory/inspection agency has been approved.
d. The Materials Control Group may order modifications of the inspection reporting procedure utilized by the provider prior to approval.

10. CITY Personnel Travel Requirements:

a. The CONTRACTOR shall administer the travel and furnish the following services for CITY personnel who are attending Prefabrication Meetings and performing inspection services.

(1) Purchase airline tickets (Coach Class only).
(2) Make hotel reservations and prepay for the planned number of nights. (Three Star or American Automobile Association (AAA) Three Star approved.)
(3) Make rental car reservations and prepay for the planned number of days if the manufacturer's or fabricator's facility is greater than one (1) mile from the departing and arrival airport or hotel.
(4) The estimated per diem travel allowance will be at least fifty U.S. dollars ($50.00) per day for meals, enroute expenses, and other miscellaneous expenses. CITY personnel will submit an expense statement to the CITY for approval of actual expenses incurred.
(5) For CITY paid advances, the CONTRACTOR shall reimburse the CITY for these actual expenses by deductive Change Order to be deducted from the Bid item, ALLOWANCE FOR CITY INSPECTION.
(6) When requested by the ENGINEER or the INSPECTOR, the CONTRACTOR shall provide an advance check, for the estimated costs of all travel allowance costs, to the ENGINEER or the INSPECTOR, no later than forty-eight (48) hours prior to the departure time. Failure to provide all accommodations described herein in such a manner to adequately facilitate the travel activity will cause the inspection visit to be canceled, and any costs or delays owing to such rescheduling shall be borne by the contractor.

b. As the basis for cost reimbursement under SCHEDULE OF WORK AND PRICES of the Bid Proposal, the CONTRACTOR shall submit receipts or invoices for payment to the ENGINEER with a cover letter referencing the following:

(1) INSPECTOR’S or ENGINEER’S name.
(2) Project title.
(3) Project Work Order Number.
(4) CONTRACTOR’S:

(a) Name.
(b) Address.
(c) Telephone Number.
(d) CONTRACTOR’S contact person and telephone number(s).

(5) Reference Technical Specification and submittal number.
(6) Purpose of inspection.
(7) Address and location of inspection:
(8) Country.
(9) State.

(10) City.
(11) Date(s) of inspection.
(12) Description of items enclosed as set forth herein.

11. Shop Inspected Equipment/Materials:

a. Without waiving any specific requirement of the Contract Documents, the following items of equipment and/or material are examples of, but not limited to those items that are subject to shop inspection as noted herein below.

Equipment/Materials	Spec. Sect.	Insp. Req'd	Product Identification	See Notes
Anodizing	09800	YES	Yellow Tag	G.N.18
Asphalt Material	02710	YES	Batch Plant Insp. Report #1101	G.N.8
Base Material	02310	NO	Standards Div. Approves Source	
Bearing Pads	05120	YES	Yellow Tag	G.N.31
Bolting	05120	YES	Inspector Witness - Yellow Tag	G.N.2
Coatings	Div. 9	YES	Insp. Witness & meas. thickness	G.N.18
Concrete	03300	YES	Batch Plant Insp. Report # 1101	G.N.8
Concrete-Fiberglass Reinf.	03400	YES	Batch Plant Insp. Report # 1101	G.N.12
Concrete – mix Designs	03300	YES	Batch Plant Insp. Report # 1101	G.N.8
Concrete – Precast	03400	YES	Stamped “LA City Approved”	G.N.9
Concrete – Prestressed	03400	YES	Yellow Tag or Stamped	G.N.9
Concrete Vaults	02585	YES	Stamped “LA City Approved”	G.N.11
Catch Basins	02545	YES	Yellow tag for bulb Angle & Grating	G.N.11
Electrical - Controls	17400	YES		G.N.24
Electrical Motors	16490	YES	Yellow Tag	G.N.20
Electrical Panels	16330	YES	Yellow Tag	G.N.22
Electrical Testing	16020	YES	Inspector Witness	G.N.25
Electrical Units	Div 16	YES	Yellow Tag	G.N.25
Electrical Wiring	16150	YES	Inspector Witness	G.N.24
Escalators	Div 14	YES	Yellow Tag	G.N.19
Frames – Metal	05500	YES	Yellow Tag	G.N.6
Forgings	Div. 5	YES	Stamped “LA City Approved”	G.N.4
Galvanizing	Div. 5	YES	Inspector Witness – Yellow Tag	G.N.18
Gratings	Div. 5	YES	Yellow Tag	G.N.4
Gaskets	07900	YES	Yellow Tag	G.N.11
Linings – Pipe	09800	YES	Inspector Witness – Yellow Tag	G.N.18
Lumber	06100	NO	Treated Lumber Stamped “LA”	G.N.16
Motors	16490	YES	Yellow Tag	G.N.20
M.H. –Frames/Covers Cast Iron	02585	YES	Stamped “LA” on Cover & Frame	G.N.4
M.H. –Frames/Covers Steel	02585	YES	Stamped “LA” on Inner-Cover only	G.N.4
M.H. –Precast w/Epoxy Coating	02585	YES	Stamped “LA” or Yellow Tag	
M.H. –Shafts/Grade Rings	02585	YES	Stamped “LA” or Yellow Tag	G.N.11
Mechanical Equipment	Div. 15	YES	Yellow Tag	G.N.20
Misc. Metal Fabrication	05500	YES	Yellow Tag	G.N.1
Non-Destructive Testing	05120	YES	Inspector Witness	G.N.1
Pressure Vessels	Div. 13	YES	Yellow Tag	G.N.7
Pipe – Fiberglass		YES	Yellow Tag	G.N.15
Pipe - Steel	Div 15	YES	Yellow Tag	G.N.15
Pipe Supports	15770	YES		G.N.15

Equipment/Materials	Spec. Sect.	Insp. Req'd	Product Identification	See Notes
Pipe – Vitrified Clay	GB	NO	Standards Division will stamp 3-digit number and "LA City Approved DPW" inside full lengths of pipe	G.N.15
Pipe Welding	15610	YES		G.N.15
Plastic Liner Plate	09800	YES		G.N.29 (a)
Pullbox – Street Light & Traffic Signal.		YES	Stamped "LA City Approved" on the inside of the box	
Pre-Engineered Metal Buildings		YES		G.N.1
Pumps	Div. 11	YES	Yellow Tag	G.N.20
PVC Liner	09800	YES		G.N.29 (a)
Rebar	03200	YES	Yellow Tag	G.N.3
Sandblasted Steel Items	Div. 5	YES		
Slide Gates	11820	YES	Yellow Tag	G.N.21
Steel – Stainless	05500	YES		G.N.1
Steel Structural	05120	YES	Yellow Tag	G.N.1
Steel Supports	05120	YES	Yellow Tag	G.N.1
Street Lgt. Standards	03400	YES	Stamped "LA City Approved" or" Third Party Insp. Agency" at the bottom of the base	G.N.10
T-Lock Liner Plate Tanks – Storage	Div. 13	YES YES	Yellow Tag Yellow Tag	G.N.7
Tree Well – Cast Iron		YES	Stamped "LA" or Yellow Tag	
Tree Well – Architectural		YES	Stamped "LA" or Yellow Tag	
Tree Well – Per Std. Plans		NO		
Vessels	Div. 13	YES	Yellow Tag	G.N.7
Vaults	02585	YES	Stamped "LA" or Yellow Tag	G.N.11
Valves	1Div. 15	YES	Yellow Tag	G.N.20
Welding	Div. 5	YES	Inspector Witness – Yellow Tag	G.N.1
Wire Rope		YES	Yellow Tag	
Wood Trusses-Engineered		NO	Provide Manufacturer's Certification	

NOTES:

1. Fabrication of ferrous materials, which may include welding, high strength bolting, or non-destructive testing shall be shop inspected.
2. Bolting with ASTM A-325 bolts, ASTM A-490 bolts or other alternate fasteners shall require shop inspection. Bolting with ASTM A-307 bolts does not require shop inspection.
3. Reinforcing steel is normally sampled at the Jobsite, but for expediency, the sampling will be performed at the point of fabrication by the CITY'S Standards Division.
4. All forging and castings made at the foundry shall be shop inspected, approved and stamped prior to delivery to the Jobsite.
5. Steel stairways and handrails (ferrous) require shop inspection for welding and specified coatings.
6. Metal door and frame fabrication requires shop inspection.
7. Pressure vessels, tanks, boilers, and related equipment do require inspection of fabrication, welding, and testing.
8. Concrete, asphalt concrete and mix designs are inspected at the batch plant. These products are shop inspected for conformance to Specifications and verification by the INSPECTOR.
9. Both pre-cast and pre-stressed concrete are subject to shop inspection and approval before delivery to the Jobsite.
10. Street lighting standards of either steel, aluminum or concrete are required to be shop inspected.
11. Reinforced concrete vaults catch basins, and reinforced pipe are required to be shop inspected. (See Note 9.) Maintenance hole shafts and grade rings without reinforcement or linings do not require shop inspection. Gaskets used for reinforced concrete pipe require testing.

12. FGRC and FGRG (Fiberglass Reinforced Concrete and Fiberglass Reinforced Gypsum) should be manufactured in an approved shop and be shop inspected.
13. Mortar, grout and gypsum shall be inspected at the batch plant, unless the products are mixed at the Jobsite from approved packages under the inspection of the INSPECTOR.
14. Concrete Masonry Units (CMU) shall be inspected and sampled at the Jobsite.
15. Lining and coating of ductile iron pipe and fiberglass pipe, as well as welded supports, are subject to shop inspection. Vitrified Clay Pipe (VCP) is exempt, as are non-welded pipe supports which can be classified as standard or catalog items. The CITY'S Standards Division will provide the inspection and testing for VCP.
16. Shop inspection is not required for lumber unless it is treated lumber. Glue-laminated products do not require shop inspection. Each "Glue Lam" shall come with an individual Certificate of Compliance.
17. Millwork and wood products are not required to be shop inspected, unless the Specifications call for equivalency or inspection by the Woodworking Institute of California (W.I.C.).
18. Specified coatings including, but not limited to, anodizing, bitumen, epoxy, galvanizing, polyvinylidene fluoride, and pipe linings and coatings shall be shop inspected.
19. Conveying equipment, such as elevators, escalators, or conveyors are exempt from shop inspection. However, the structural framework of the escalators, hoists, cranes and lifts do require inspection.
20. Mechanical equipment, such as compressors, pumps, motors, and valves, require shop inspection for fabrication, tests of windings, and any specified coating. Pumps, valves and motors may be exempt if they are standard or catalog items.
21. Fabrications of sluice gates and slide gates are subject to shop inspection for fabrication, welding and coating.
22. Transformers rated at 600 volts and higher, transformers rated at 100 KVA and higher, generators, switchgear motor drives and complex wired panel boards require shop inspection.
23. Lighting fixtures and lamps are considered standard or catalog items and are exempt from shop inspection.
24. Electrical wiring and testing, performed in the shop, requires inspection to verify conformance with applicable Specifications.
25. Shop tests specified in the Specifications including, but not limited to, voltage, grounding, loads, performance, installation, temperature, or noise levels will require shop inspection.
26. HVAC (heating, ventilation, and air conditioning) are subject to shop inspection for fabrication and welding. Each component will be evaluated for possible inspection.
27. Sheet metal ductwork is not shop inspected. Flexible ductwork is considered a standard or catalog item and no shop inspection is required. Ductwork made of aluminum, stainless steel, or fiberglass will require shop inspection.
28. Storefronts and wall systems are shop inspected. Fixed windows are standard items and have no need of inspection.
29. Plastic pipe, such as ABS or PVC does not require shop inspection. The pipe will be inspected and sampled for testing at the Jobsite. (a) Extruded plastic liner plate and PVC Liner will require shop inspection.
30. Fiberglass products, because of the resins and the fiber reinforcement, do require shop inspection.
31. Elastomeric bearing pads shall be tested according to Cal-Trans Standard Specification Section 51-1.12H. Sampling will be done by the INSPECTOR.

END OF SECTION

SECTION 01454
WEIGHING AND METERING EQUIPMENT

1.1 THE REQUIREMENT

A. It is the CONTRACTOR'S responsibility to ensure that all scales and metering equipment used for proportioning materials shall be inspected for accuracy and certified within the past twelve (12) months by the State of California Bureau of Weights and Measures, by the County Director or Sealer of Weights and Measures, or by a scale mechanic registered with or licensed by the County.

B. The accuracy of the work of a scale service agency, except as stated herein, shall meet the standards of the California Business and Professions Code and the California Code of Regulations pertaining to weighing devices. A certificate of compliance shall be presented, prior to operation, to the ENGINEER for approval and shall be renewed whenever required by the ENGINEER at no cost to the CITY.

C. All scales shall be arranged so they may be read easily from the operator's platform or area. They shall indicate the true net weight without the application of any factor. The figures of the scales shall be clearly legible. Scales shall be accurate to within one percent (1%) when tested with the plant shut down. Weighing equipment shall be so insulated against vibration or moving of other operating equipment in the plant area that the error in weighing with the entire plant running will not exceed two percent (2%) for any setting nor one-and-one-half percent (1.5%) for any batch.

END OF SECTION

THIS PAGE INTENTIONALLY LEFT BLANK

SECTION 01455
CALIBRATION OF TESTING EQUIPMENT

1.1 THE REQUIREMENT

A. It is the CONTRACTOR'S responsibility to ensure that testing equipment such as, but not limited to, pressure gages, metering devices, hydraulic systems, force (load) measuring instruments, and strain-measuring devices shall be calibrated by a testing agency acceptable to the ENGINEER at intervals not to exceed twelve (12) months and following repairs, modification, or relocation of the equipment. Calibration certificates shall be provided when requested by the ENGINEER.

END OF SECTION

THIS PAGE INTENTIONALLY LEFT BLANK

SECTION 01561
ENVIRONMENTAL CONTROL

1.1 THE REQUIREMENT

A. Explosives for Blasting:

1. The use of explosives for blasting purposes on the work shall not be permitted.

B. Fugitive Dust and Smoke Control:

1. The CONTRACTOR shall furnish all labor, equipment, and means required and shall carry out effective measures wherever and as often as necessary to prevent its operation from producing dust in amounts damaging to property, cultivated vegetation, or domestic animals, or causing a nuisance as defined by the ENGINEER. The CONTRACTOR shall be responsible for any damage resulting from any dust originating from its operations. The dust abatement measures shall be continued until the CONTRACTOR is relieved of further responsibility by the ENGINEER. No separate payment shall be allowed for dust abatement measures and all costs thereof shall be included in the CONTRACTOR's Bid. The use of water resulting in mud on streets, sidewalks, driveways, shall not be permitted as a substitute for sweeping or other methods of dust control.
2. The CONTRACTOR shall not discharge smoke, dust, or any other air contaminants into the atmosphere in such quantity as will violate the regulations of any legally constituted authority.
3. The CONTRACTOR shall comply with the requirements of Title 8, California Code of Regulations, concerning handling of asbestos dust.

C. Rubbish Control:

1. Through all phases of construction, including suspension of Work and until final acceptance of the Project, the CONTRACTOR shall keep the Worksite and other areas used by it in a neat and clean condition, and free from any accumulation of rubbish and debris. The CONTRACTOR shall dispose of all rubbish and waste materials of any nature occurring at the Worksite and shall establish regular intervals of collection and disposal of such materials and waste. The CONTRACTOR shall also keep its haul roads free from dirt, rubbish, and unnecessary obstructions resulting from its operations. Care shall be taken to prevent spillage on haul routes. Any such spillage shall be removed immediately and the area cleaned by the CONTRACTOR. Equipment and material storage shall be confined to areas approved by the ENGINEER. Disposal of all rubbish and surplus materials shall be off the site of construction, at the CONTRACTOR's expense, all in accordance with local codes and ordinances governing locations and methods of disposal, and in conformance with all applicable safety laws, and the requirements of the OSHA Safety and Health Standards for Construction. All cleanup cost shall be included in the CONTRACTOR's Bid.

D. Sanitation:

1. Fixed or portable chemical toilets shall be provided for the use of the CONTRACTOR's employees. These accommodations shall be maintained in a neat and sanitary condition. Toilets at construction sites shall conform to the requirements of Title 8, California Code of Regulations.

2. Wastewater conveyance and disposal shall not be interrupted. Should the CONTRACTOR disrupt existing sewer facilities, sewage shall be conveyed in closed conduits and disposed of in a sanitary sewer system. Sewage shall not be permitted to flow in trenches or be covered by backfill.
3. The CONTRACTOR shall establish a regular schedule for the collection of all sanitary and organic waste. All wastes and refuse from sanitary facilities provided by the CONTRACTOR or organic material wastes from any other source related to the CONTRACTOR's operations shall be disposed of away from the site in a manner satisfactory to the INSPECTOR and in accordance with all laws and regulations pertaining thereto. Disposal of all such wastes shall be at the CONTRACTOR's expense.

E. Chemicals:

1. The following paragraph does not relieve the CONTRACTOR from its responsibility for obtaining prior approval from the ENGINEER for chemical usage when otherwise required.
2. The CONTRACTOR shall provide four (4) copies of the MSDS to the INSPECTOR for all chemicals used during project construction or furnished for project operation, prior to bringing them on site, whether defoliant, soil sterilant, herbicide, pesticide, disinfectant, polymer, reactant, or of other classification, which shall show approval of either the U.S. Environmental Protection Agency or the U.S. Department of Agriculture. Use of all such chemicals and disposal of residues shall be in strict accordance with the printed instructions of the manufacturer and with all other applicable laws and regulations.

F. Lead paint notification:

1. The CONTRACTOR is hereby notified that the facility under this Contract may contain Lead (Pb), Chromium (Cr) and Molybdenum (Mo).
2. If any paints containing Lead or Chromium are to be physically disturbed or made airborne during the progress of the Work by activities such as abrasive blasting, welding, cutting or torch burning, the CONTRACTOR shall provide appropriate worker protection in accordance with OSHA Lead in Construction Standard and in any other applicable regulations.
3. All paint which is removed or disturbed during the progress of the Work or any demolition debris which contains these paints, either of which contains in excess of 5 ppm (mg/l) Lead or Hexavalent Chromium when tested in accordance with the Waste Extraction Test (WET) method of the California Code of Regulations, Title 22, shall be disposed of as hazardous waste. The CONTRACTOR shall be responsible for such disposal in accordance with all applicable laws and regulations.

G. Hazardous Waste:

1. Hazardous waste generated by the CONTRACTOR at the site shall be disposed of in accordance with NOTIFICATION OF HAZARDOUS SUBSTANCES of the General Conditions.

H. Odor Control:

1. The CONTRACTOR shall furnish all labor, materials, and equipment required and shall carry out effective measures whenever and as often as necessary to prevent the discharge of a nuisance odor from its operation into the atmosphere in such quantity as will violate the regulations of any legally constituted authority. During construction, the CONTRACTOR shall notify the ENGINEER and the INSPECTOR at least forty-eight (48) hours in advance when potential odor causing activities are scheduled for construction.

I. Drainage Control:

1. The CONTRACTOR shall maintain drainage within and through the Work areas. Earth dams will not be permitted in paved areas. Temporary dams of sandbags, asphaltic concrete, or other acceptable material will be permitted when necessary. Such dams shall be removed from the site as soon as their use is no longer necessary.

J. Lake Level Control:

1. The CONTRACTOR shall maintain the lake level and lake use at all times. Temporary dewatering system will be permitted. Work includes removing the dewatering system when no longer needed.

K. Graffiti Control:

1. Throughout all phases of Work, including suspension of work, and until final acceptance, the CONTRACTOR shall keep all equipment, field offices, storage facilities and other facilities free of graffiti. Graffiti shall be painted over, masked or cleaned off within twenty-four (24) hours after notification by the INSPECTOR.

L. Vermin Control:

1. At the time of acceptance, structures entirely constructed under the Contract shall be free of rodents, insects, vermin, and pests. Necessary extermination work shall be arranged and paid for by the CONTRACTOR as part of the work within the contract time and shall be performed by a licensed exterminator in accordance with requirements of governing authorities. The CONTRACTOR shall be liable for injury to persons or property and responsible for the elimination of offensive odors resulting from extermination operations.

M. Pre- and Post-Construction Assessment and Survey Documentation (PCASD):

1. The CONTRACTOR shall be responsible for any damage to the adjacent properties caused by the CONTRACTOR or its Subcontractors. This includes damage to all pertinent properties adjacent to and/or near the vicinity of the City project that the CONTRACTOR shall be responsible for any damage they experience caused by the CONTRACTOR or its Subcontractors, in particular on either side of Lake Street south of 7th Street, and Grand View Avenue south of 7th Street.
2. The CONTRACTOR shall implement assessment damage prevention and measures as necessary. As a minimum, the CONTRACTOR shall secure the services of a property assessment company to prepare a PCASD report for

adjacent premises and structures at addresses and locations listed below to differentiate the existing conditions from post constructions:

a. Existing structures on both sides of Lake Street from 7th Street south to the first alley.
b. Existing structures on both sides of Grand View Avenue from 7th Street south to the first alley.

3. The property assessment company shall have a minimum experience of 10 years performing similar work including have establish forms and procedures for petitioning right-of-entry from property owners and renters. The lead investigator/assessor of the property assessment company shall have a minimum of 5 years' experiences in conducting this type of work on over 30 similar properties and / or structures.
4. Report shall be in color, minimum three (3) hard copies, and an electronic (pdf) copy. Each property/structure shall have its own separate report. The interior and exterior survey includes, but is not limited to, visual observation of the interior ceilings, walls, floors, windows, doors, basement, stairs, the exterior walls, roof, walkways, driveways, retaining walls, perimeter walls, and other special features currently on the properties, with accompanying photographs. All reports shall be signed by both the lead assessor and executive level representatives. Property owners shall be provided with a hard copy of each report.
5. Each photograph shall include date, time, location and direction of view. The PCASD report includes attached "Notification Letter" to be signed by the property or/and rental owners. Also, any observed existing damage shall be identified as "low", " medium", or of "high" severity, or similar rating system.
6. The pre-construction assessment survey and report shall be conducted and prepared just prior to implementing any work adjacent to identified addresses and locations. However, ample time shall be scheduled to secure right-of-entry in advance of actual survey.
7. The post-construction assessment survey and report shall be conducted and prepared immediately after substantial completion of work at each address and/or location, or as directed in writing by the ENGINEER.
8. The CONTRACTOR shall be responsible for all the repair costs if the damages to existing facilities are caused by CONTRACTOR.
9. All costs for performing the PCASD report shall be included in Bid Item No. 1. The City has the option to cancel the need for conducting the post-construction survey and related report for any identified item and receive corresponding credit.

END OF SECTION

SECTION 01562
ENVIRONMENTAL MITIGATION OR CONDITIONS

1.1 THE REQUIREMENT

A. The CONTRACTOR shall mitigate the adverse environmental impacts associated with the Work of the Contract. The CONTRACTOR shall indemnify and hold harmless the CITY from any and all fines, penalties or damages incurred by the CITY for violation of any environmental mitigation measures or permit caused by the CONTRACTOR's failure to comply with environmental mitigation measures of this Article. The measures that the CONTRACTOR shall take to mitigate environmental impacts include, but are not limited to the following:

1. Implement a Fugitive Dust and Erosion Control Plan (FDECP) that meets or exceeds SCAQMD requirements and the CITY'S FDECP for this site.

2. Comply with the General Construction Activity Storm Water Permit and the Storm Water Pollution Prevention Plan for this site.

3. Comply with the requirements of NOTIFICATION OF HAZARDOUS SUBSTANCES of the General Conditions.

4. Protect sensitive habitats and species through the use of fencing, to prohibit construction personnel access to adjacent habitat areas, and with dust control measures of the FDECP, and such other measures that may be called for by the Environmental Impact Report for this project.

5. Comply with the following emission control measures to minimize construction activity emissions, at no additional cost to the CITY:

    a. Stop construction activities during Stage II smog alerts which will be announced to the CONTRACTOR by the ENGINEER;

    b. Reduce construction equipment emissions by shutting off all equipment not in actual use;

    c. Reduce construction-related traffic congestion;

    d. Provide rideshare incentives for construction personnel;

    e. Tune and maintain construction equipment properly;

    f. Use low sulfur/low nitrogen fuel for construction equipment, if available;

    g. Provide transit incentives for construction personnel;

    h. Configure construction parking to minimize traffic interference;

    i. Minimize obstruction of through-traffic lanes;

j. Provide a flagperson to facilitate traffic flow and prevent traffic congestion;

k. Schedule operations affecting roadways for off-peak traffic hours.

B. Comply with the more stringent requirements of the current CITY or local noise ordinances, which may include:

1. MM-NV-1. Construction Noise Control and Mitigation Plan. The City will require its construction contractor(s) working on proposed project improvements to develop a noise control plan to address construction equipment noise at noise-sensitive uses where construction noise impacts may be significant. The noise control plan must be approved by the City prior to implementation and will require the construction contractor(s) to specify noise-reducing construction measures and practices that will be employed to reduce noise from construction activities to the maximum extent feasible. Measures that can be used to limit construction-related noise include, but are not limited to, the following:
   a. Construction hours: Limit construction to the hours of 7:00 a.m. to 9:00 p.m. on weekdays and between 8:00 a.m. and 6:00 p.m. on Saturdays and prohibit construction equipment noise anytime on Sundays and holidays. Prevent construction personnel from being on the project site (including laydown and storage areas), and prohibit material or equipment deliveries and collections, during the prohibited hours.
   b. Construction equipment: Properly muffle and maintain all construction equipment powered by internal combustion engines. Ensure that all construction equipment powered by gasoline or diesel engines has sound control devices that are at least as effective as those originally provided by the manufacturer and that all equipment is operated and maintained to minimize noise generation.
   c. Stationary equipment: Locate stationary noise-generating construction equipment, such as air compressors and portable power generators, as far as practical from existing noise-sensitive land uses; muffle and enclose such equipment within temporary enclosures and shielded by barriers, to the extent feasible.
   d. Quiet equipment: Use the quietest equipment available, equip internal combustion powered equipment with properly operating mufflers, and keep equipment in tune to avoid backfires. In addition, if exposed, fit engines with protective shrouds to reduce motor noise.
   e. Electrical power: Use local electrical grid-power when feasible to avoid the use of portable generators.
   f. Temporary noise barriers: Erect temporary noise attenuation barriers adjacent to stationary construction equipment directly between the equipment and noise-sensitive use, where necessary and feasible. Shield construction equipment that is to be stationary for extended periods (e.g., compressors, generators), if appropriate, by erecting temporary noise attenuation barriers. Evaluate the need for, and feasibility of, noise attenuation barriers on a case-by-case basis considering the distance to noise-sensitive receptors, the available space at the construction location, and safety and operational considerations. If used, install the barriers directly between the equipment and the nearest noise-sensitive use to the construction site.
   g. Noise enclosures: Use noise-reducing enclosures around noise-generating equipment that has the potential to disturb nearby

off-site land uses or where otherwise necessary to comply with City Code noise limits for receiving zones.

h. Noise Best Available Control Technology (BACT): Ensure that equipment and trucks used for project construction use the best available noise control techniques (e.g., improved mufflers, equipment redesign, intake silencers, ducts, engine enclosures, and acoustically attenuating shields or shrouds) wherever feasible.

i. Noise signals: Use noise-producing signals (e.g., horns, whistles, alarms, and bells) for safety warning purposes only.

j. Impact tools: Power impact tools (e.g., pavement breakers) for project construction hydraulically or electrically (where feasible) to avoid noise associated with compressed air exhaust from pneumatically powered tools. However, where use of pneumatic tools is unavoidable, use an exhaust muffler on the compressed air exhaust. Use quieter procedures, such as drills rather than impact equipment, where feasible.

k. Regulatory compliance: Ensure that all construction equipment used on the proposed project that is regulated for noise by a local, state, or federal agency complies with such regulation while in the course of project activity and use on-site.

l. Noise-considerate operation training: Train construction employees in the proper operation and use of the equipment. (Careless or improper operation or inappropriate use of equipment can increase noise levels. Poor loading, unloading, excavation, and hauling techniques are examples of how a lack of adequate guidance and training may lead to increased noise levels.)

m. Noise-considerate staging and laydown: Store construction equipment on the project site or designated laydown areas while in use, to the extent feasible. This will eliminate noise associated with repeated transportation of the equipment to and from the site.

n. Noise monitoring: Monitor the effectiveness of noise attenuation measures by taking noise measurements.

o. Other: In addition to these measures, prior to the start of construction, the City or its construction contractor will develop a list of measures for controlling noise and for responding to and tracking complaints pertaining to construction noise. These measures include:

    (1) Identification of measures that will be implemented to control construction noise.

    (2) Identification of locations where it is infeasible to limit noise to be in compliance with applicable City standards.

    (3) Procedure and phone numbers for notifying the City Department of Health or the Police Department (for complaints).

    (4) Designation of a disturbance coordinator for responding to noise complaints, with their name and telephone complaint number to be clearly posted at the construction site; the telephone must be answered at all times during construction.

    (5) Plan for notification of neighboring noise-sensitive land uses and non-residential building managers—within 300 feet of the project construction area at least 30 days in advance of high noise-generating activities (defined as activities that generate noise levels of 90 dBA or greater at 50 feet from the source) regarding the estimated duration of activity and the associated control measures that will be implemented to reduce noise levels

C. For projects under the City's Homeless Facilities Program, construction shall comply with a construction management plan with conditions incorporated into the project design that may include any of the following, or any other condition, as necessary to protect the health, safety, or convenience of affected sensitive receptors in the surrounding neighborhood :

1. Construction or use of noise barriers, enclosures, or blankets;
2. Use of low-noise, low vibration, low emission-generating construction equipment, e.g., Tier 4 engines;
3. Maintenance of mufflers and ancillary noise abatement equipment;
4. Use of vibration pile drivers and other techniques that result in less noise than impact pile drivers;
5. Scheduling high noise producing activities during periods that are least sensitive;
6. Routing construction related truck traffic away from noise-sensitive areas;
7. Reducing construction vehicle speeds.
8. Locate equipment as far as feasible from sensitive receptors.

9. The CONTRACTOR, a minimum of thirty (30) days prior to beginning work on each new major activity, shall submit a written plan to the ENGINEER, for approval, detailing how the environmental impacts for the activity shall be mitigated in accordance with the Mitigation Monitoring Program. The plan shall include, at a minimum:

    1. Anticipated site conditions;
    2. Equipment to be utilized;
    3. Means and methods of construction;
    4. Impacts likely to occur;
    5. Mitigation methods to be employed.

D. The CONTRACTOR, a minimum of thirty (30) days prior to beginning work on each new major activity, shall submit a written plan to the ENGINEER, for approval, detailing how the environmental impacts for the activity shall be mitigated in accordance with the Mitigation Monitoring Program (MMP). The plan shall include, at a minimum:

1. Anticipated site conditions;

2. Equipment to be utilized;

3. Means and methods of construction;

4. Impacts likely to occur;

5. Mitigation methods to be employed.

E. Implementation of the following mitigation measures is required:

Table 1 Mitigation Measures

Mitigation Measure	Monitoring/ Reporting Action	Timing of Implementation	Monitoring Responsibility	Verification of Compliance
Biological Resources				
MM-BIO-1: Protection of Migratory Birds. If construction or maintenance activities that require the removal of vegetation are scheduled to occur during the nesting season for birds/raptors (January 1 to September 15), vegetation clearing for the proposed project shall be conducted outside the nesting season, if feasible. If it is not feasible to schedule vegetation clearing outside of nesting season and prior to implementation of construction or maintenance activities that could result in removal of or disturbances to vegetation providing bird nesting habitat during the bird nesting season (January 1 through September 15), the following shall occur: ▪ A biological survey will be conducted 72 hours prior to construction or maintenance that will remove or disturb suitable nesting habitat during the breeding season. The survey will be performed by a qualified avian biologist with experience conducting breeding bird surveys. The biologist will prepare a survey report within 24 hours of conducting the survey, documenting the presence or absence of any active nest of a migratory bird. ▪ If an active nest is located within the construction area, or in the vicinity, and the biologist determines that the nest may be impacted, an appropriate no-work buffer will be established by the biologist, in consultation with CDFW, based on the species, the type of construction activities, and other considerations. Vegetation removal within the buffer and other construction activities as determined by the biologist will be postponed until the nest is vacated and juveniles have fledged (minimum of 6 weeks after egg laying) and when there is no evidence of a second attempt at nesting. ▪ The biologist shall serve as a construction monitor during those periods when construction activities will occur near active nest areas to ensure that no inadvertent impacts on these nests shall occur.	Avoidance of vegetation removal during nesting season, if feasible; Documentation of biological survey, if required; Establishment of an appropriate no-work buffer by the biologist, in consultation with CDFW, if an active nest is located within the construction area; Biological construction monitoring during construction, if vegetation clearing occurs during nesting season	Prior to construction; During construction if vegetation is not cleared outside of nesting season; During maintenance activities	City BOE; qualified avian biologist	Contract specifications; Field inspections
Cultural Resources				
MM-CR-1. Archaeological Resources Pre-construction Worker Training. Prior to the commencement of ground disturbing activities, a professional qualified archaeologist shall be retained to provide construction personnel with a briefing in the identification of archaeological resources and information on regulatory requirements for the protection of cultural resources. The briefing shall include examples of cultural resources (i.e., archaeological, Native American, and paleontological resources) that may be onsite and protocols to follow if discoveries are made. The archaeologist shall develop the training program and any supplemental materials necessary for its implementation.	Retention of a qualified archaeologist; Archaeological resources briefing/training program conducted by a qualified archaeologist for all construction personnel	Prior to construction	City BOE; qualified archaeologist	Contract specifications; Documentation of worker training and attendance records
MM-CR-2. Archaeological Resources Monitoring. Prior to initiation of any project-related grading or excavation activities, a qualified archaeologist and an archaeological monitor under the archaeologist's direction shall be retained to provide monitoring during ground disturbing (i.e., excavation) activities in native soils. **Resource Identification.** During construction, should subsurface archaeological resources be discovered, all activity within 50 feet of the find shall stop and the qualified archaeologist shall assess the significance of the find in accordance with State CEQA Guidelines Section 15064.5. Work shall not resume in the direct area of the discovery until it is assessed by the archaeologist and they indicate that construction can resume. **Resource Evaluation and Recovery.** If any find is determined to be significant, the archaeologist shall determine, in consultation with the implementing agency, appropriate avoidance measures or other appropriate mitigation. Per State CEQA Guidelines Section 15126.4(b)(3), preservation in place shall be the preferred means to avoid impacts to archaeological resources qualifying as historical resources. Consistent with State CEQA Guidelines Section 15126.4(b)(3)(C), if it is demonstrated that resources cannot be avoided, the qualified archaeologist shall develop additional treatment measures, such as data recovery or other appropriate measures, in consultation with the implementing agency, as applicable. When data recovery through excavation is the only feasible mitigation, a data recovery plan, which makes provisions for adequately recovering the scientifically consequential information from and about the historical resource, shall be prepared by the archaeologist prior to any excavation of the resource being undertaken. Any resulting data recovery reports shall be deposited with the California Historical Resources Regional Information Center or a legal repository. If an archaeological site does not qualify as a historical resource but meets the criteria for a unique archaeological resource as defined in Section 21083.2 of the Public Resources Code, then the site shall be treated in accordance with the provisions of Section 21083.2. **Human Remains.** If human remains are encountered at any point during project excavation, the contractor shall immediately cease all work on the project until the coroner deems it appropriate to resume. All procedures before and after the human remains are removed shall follow applicable laws and regulations, including Health and Safety Code Section 7050.5 and Public Resources Code Section 5097.98. **Reporting and Curation.** Reporting shall be completed in conformance with the guidelines set forth by the California Department of Parks and Recreation Office of Historic Preservation for Archaeological Research Management Reports. Proper curation and archiving of artifacts shall be conducted in accordance with regulatory requirements and industry standards. Within three months of the completion of monitoring, a compliance report shall be submitted to the implementing agency that summarizes the monitoring efforts, including any artifacts that have been processed. The final report shall be submitted to the South Central Coastal Information Center.	Retention of a qualified archaeologist and an archaeological monitor under the archaeologist's direction; Monitoring of ground disturbing activities by the qualified archaeologist; Implementation of actions for resource identification, resource evaluation and recovery, human remains, and reporting and curation, if applicable, as specified in the mitigation measure	Prior to construction; During construction	City BOE; qualified archaeologist; archaeological monitor	Contract specifications; Field inspections; Archaeological monitor's logs
MM-CR-3. Paleontological Resources Pre-construction Worker Training. ▪ Prior to the commencement of ground disturbing activities, a qualified paleontologist shall be retained to create a Worker's Environmental Awareness Program pamphlet that will be provided as training to construction personnel to understand regulatory requirements for the protection of paleontological resources. This training shall include examples of paleontological resources to be aware of in the vicinity and protocols to follow if discoveries are made. The paleontologist shall develop the pamphlet and any supplemental materials necessary to implement the program.	Retention of a qualified paleontologist; Creation of a Worker's Environmental Awareness Program pamphlet by the qualified paleontologist and distribution to all construction personnel	Prior to construction	City BOE; qualified paleontologist	Contract specifications; Worker's Environmental Awareness Program pamphlet; Documentation of distribution to construction personnel

Table 1 Mitigation Measures

Mitigation Measure	Monitoring/ Reporting Action	Timing of Implementation	Monitoring Responsibility	Verification of Compliance
MM-CR-4. Paleontological Resources Monitoring. Prior to initiation of any project-related grading or excavation activities, a professional paleontologist and a paleontological monitor under the paleontologist's direction shall be retained. The paleontological monitor shall monitor all excavation in native soils. **Monitoring.** Monitoring will entail the visual inspection of excavated or graded areas as well as trenching, sidewalls, and entrance/exit pits during project excavation. If no significant fossils have been exposed, the paleontologist may determine that full time monitoring is no longer necessary, and periodic spot checks or no further monitoring may be recommended. **Resource Identification, Evaluation, and Recovery.** If a paleontological resource is encountered when a monitor is not onsite, all construction shall cease within at least 50 feet of the discovery and the paleontologist or paleontological monitor shall be notified immediately. If the monitor is present at the time of discovery, then the monitor will have the authority to temporarily divert the construction equipment around the find until it is assessed for scientific significance. Work shall not resume in the direct area of the discovery until it is assessed, and the paleontologist indicates that construction can resume. If the resource is found to be significant, the paleontologist shall systematically remove and stabilize the specimen(s) in anticipation of preservation. If necessary, soil samples will be collected per Society of Vertebrate Paleontologists standards. After basic laboratory analysis and cataloging has been completed, the specimen(s) shall be curated at a qualified research facility, such as the Los Angeles County Natural History Museum or other legal repository. Within three months of the laboratory analysis, a compliance report shall be submitted to the implementing agency that summarizes the efforts and result. The final report shall be submitted to the Los Angeles County Natural History Museum or other legal repository.	Retention of a qualified paleontologist and a paleontological monitor under the paleontologist's direction; Monitoring of grading or excavation activities by the professional paleontologist; Implementation of actions for resource identification, evaluation, and recovery, if applicable, as specified in the mitigation measure	Prior to construction; During construction	City BOE; qualified paleontologist; paleontological monitor	Contract specifications; Field inspections; Paleontological monitor's logs
Noise and Vibration				
MM-NV-1. Construction Noise Control and Mitigation Plan. The City will require its construction contractor(s) working on proposed project improvements to develop a noise control plan to address construction equipment noise at noise-sensitive uses where construction noise impacts may be significant. The noise control plan must be approved by the City prior to implementation and will require the construction contractor(s) to specify noise-reducing construction measures and practices that will be employed to reduce noise from construction activities to the maximum extent feasible. Measures that can be used to limit construction-related noise include, but are not limited to, the following: ▪ **Construction hours.** Limit construction to the hours of 7:00 a.m. to 9:00 p.m. on weekdays and between 8:00 a.m. and 6:00 p.m. on Saturdays, and prohibit construction equipment noise anytime on Sundays and holidays. Prevent construction personnel from being on the project site (including laydown and storage areas), and prohibit material or equipment deliveries and collections, during the prohibited hours. ▪ **Construction equipment.** Properly muffle and maintain all construction equipment powered by internal combustion engines. Ensure that all construction equipment powered by gasoline or diesel engines has sound control devices that are at least as effective as those originally provided by the manufacturer and that all equipment is operated and maintained to minimize noise generation. ▪ **Stationary equipment.** Locate stationary noise-generating construction equipment, such as air compressors and portable power generators, as far as practical from existing noise-sensitive land uses; muffle and enclose such equipment within temporary enclosures and shielded by barriers, to the extent feasible. ▪ **Quiet equipment.** Use the quietest equipment available, equip internal combustion powered equipment with properly operating mufflers, and keep equipment in tune to avoid backfires. In addition, if exposed, fit engines with protective shrouds to reduce motor noise. ▪ **Electrical power.** Use local electrical grid-power when feasible to avoid the use of portable generators. ▪ **Temporary noise barriers.** Erect temporary noise attenuation barriers adjacent to stationary construction equipment directly between the equipment and noise- sensitive use, where necessary and feasible. Shield construction equipment that is to be stationary for extended periods (e.g., compressors, generators), if appropriate, by erecting temporary noise attenuation barriers. Evaluate the need for, and feasibility of, noise attenuation barriers on a case-by-case basis considering the distance to noise-sensitive receptors, the available space at the construction location, and safety and operational considerations. If used, install the barriers directly between the equipment and the nearest noise-sensitive use to the construction site. ▪ **Noise enclosures.** Use noise-reducing enclosures around noise-generating equipment that has the potential to disturb nearby off-site land uses or where otherwise necessary to comply with City Code noise limits for receiving zones. ▪ **Noise Best Available Control Technology (BACT).** Ensure that equipment and trucks used for project construction use the best available noise control techniques (e.g., improved mufflers, equipment redesign, intake silencers, ducts, engine enclosures, and acoustically attenuating shields or shrouds) wherever feasible. ▪ **Noise signals.** Use noise-producing signals (e.g., horns, whistles, alarms, and bells) for safety warning purposes only. ▪ **Impact tools.** Power impact tools (e.g., pavement breakers) for project construction hydraulically or electrically (where feasible) to avoid noise associated with compressed air exhaust from pneumatically powered tools. However, where use of pneumatic tools is unavoidable, use an exhaust muffler on the compressed air exhaust. Use quieter procedures, such as drills rather than impact equipment, where feasible. ▪ **Regulatory compliance.** Ensure that all construction equipment used on the proposed project that is regulated for noise by a local, state, or federal	Development and implementation of a project-specific Construction Noise Control and Mitigation Plan by construction contractor(s) for approval by the City; Implementation of measures specified in the plan; Establishment of noise complaint procedures; Designation of disturbance coordinator with name and complaint telephone number posted onsite; Notification of neighboring noise- sensitive land uses and building managers	Prior to construction; During construction	City BOE; construction contractor(s); Disturbance Coordinator	Contract specifications; Field inspections; Regular reporting on construction noise control and mitigation plan, including documentation; Complaint log; Documentation of notifications to neighboring land uses specified in mitigation measure

Table 1 Mitigation Measures

Mitigation Measure	Monitoring/ Reporting Action	Timing of Implementation	Monitoring Responsibility	Verification of Compliance
agency complies with such regulation while in the course of project activity and use on-site. ▪ **Noise-considerate operation training.** Train construction employees in the proper operation and use of the equipment. (Careless or improper operation or inappropriate use of equipment can increase noise levels. Poor loading, unloading, excavation, and hauling techniques are examples of how a lack of adequate guidance and training may lead to increased noise levels.) ▪ **Noise-considerate staging and laydown.** Store construction equipment on the project site or designated laydown areas while in use, to the extent feasible. This will eliminate noise associated with repeated transportation of the equipment to and from the site. ▪ **Noise monitoring.** Monitor the effectiveness of noise attenuation measures by taking noise measurements. In addition to these measures, prior to the start of construction, the City or its construction contractor will develop a list of measures for controlling noise and for responding to and tracking complaints pertaining to construction noise. These measures include: ▪ Identification of measures that will be implemented to control construction noise. ▪ Identification of locations where it is infeasible to limit noise to be in compliance with applicable City standards. ▪ Appointment of a public liaison during project construction, who shall be responsible for addressing public concerns about construction activities, including excessive noise. As needed, the liaison shall determine the cause of the noise concern and implement measures to address the concern. The liaison will work directly with the construction contractor to ensure implementation of the Construction Noise Control and Mitigation Plan. ▪ Procedure and phone numbers for notifying the City Department of Health or the Police Department (for complaints). ▪ Designation of a disturbance coordinator for responding to noise complaints, with their name and telephone complaint number to be clearly posted at the construction site; the telephone must be answered at all times during construction. The disturbance coordinator shall coordinate noise complaints and responses with the public liaison. ▪ Plan for notification of neighboring noise-sensitive land uses and non-residential building managers—within 300 feet of the project construction area at least 30 days in advance of high noise-generating activities (defined as activities that generate noise levels of 90 dBA or greater at 50 feet from the source)—regarding the estimated duration of activity and the associated control measures that will be implemented to reduce noise levels.				
MM-NV-2. Construction Vibration Control and Mitigation Plan. To limit the impacts of construction-related vibration on nearby structures where significant vibration impacts would be anticipated, the City or its construction contractor will prepare and implement a project-specific Construction Vibration Control and Mitigation Plan. Specifically, prior to construction of project elements that would result in significant vibration impacts to nearby structures, the City or its construction contractor will retain a professional structural engineer with experience in structural vibration analysis to perform the following tasks: ▪ Review the project plans to determine the potential construction impact zone and conduct pre- and post- construction surveys of the structures that would be subject to significant vibration to document the pre- and post- construction conditions of the surveyed structures. ▪ Prepare a detailed vibration analysis demonstrating that the use of vibratory equipment at the construction site boundary closest to adjacent vibration-sensitive buildings would not result in the potential for building damage. This analysis will take into account other projects whose construction may be planned in the immediate project area and that might overlap with construction of the proposed project. The analysis must detail the safe distances or measures to be undertaken at which the anticipated construction equipment can operate without resulting in vibration levels greater than 0.10 PPV (inches per second) at the buildings located at 2228 7th Street, 2200 7th Street, 2126 7th Street, and 720 Lake Street; 0.30 PPV at the residential units on Grand View Street; 0.50 PPV at the MacArthur Park Elementary School for the Visual and Performing Arts; or as otherwise determined by the professional structural engineer to not result in structural damage, based on building conditions, soil conditions, and planned construction, demolition, or excavation methods. Such measures, as determined by the professional structural engineer, could include, but are not limited to, prohibiting the use of certain vibratory equipment in proximity to vibration-sensitive buildings, requiring the use of the lightest practical tracked or wheeled construction equipment, requiring the phasing of construction elements to avoid simultaneous operation of heavy vibration- generating equipment, requiring that the demolition of concrete be completed using non-impact methods (e.g., sawing), and requiring monitoring at applicable vibration- sensitive buildings during construction. ▪ Prepare and submit a report to the City's project manager that includes, but is not limited to, the description of pre- and post-construction conditions of all surveyed structures. If construction-related vibration causes damage to a surveyed structure, the structural engineer will recommend necessary repairs based on the pre- and post-construction conditions (as documented in the structural engineer's report). The City's construction contractor will be responsible for remedying vibration-caused damage as a result of construction of the project to pre-construction conditions, as documented in the structural engineer's report. Such repairs must be undertaken and completed as required to conform to the Secretary of the Interior's Standards for the Treatment of Historic Properties (36 CFR Part 68), where applicable, and must apply the California Historical Building Code (24 CCR Part 8) and other applicable codes. The City will confirm that the contractor has completed all remedies associated with vibration impacts prior to close of the construction contract.	Preparation and implementation of a project-specific Construction Vibration Control and Mitigation Plan by the City or its construction contractor; Retention of a professional structural engineer with experience in structural vibration analysis by the City or its construction contractor to prepare a detailed vibration analysis; Identification of safe distances; Implementation of measures as specified in the plan; Structural repairs, if necessary	Prior to construction; During construction; Post construction	City BOE; construction contractor(s); professional structural engineer	Contract specifications; Field inspections; Report of pre- and post- construction conditions of all surveyed structures; Documentation of repairs, if applicable

Table 2 Best Management Practices				
Best Management Practice	**Monitoring/ Reporting Action**	**Timing of Implementation**	**Monitoring Responsibility**	**Verification of Compliance**
Construction Staging and Fencing. Construction and staging areas will be closed to the public during construction activities. Temporary fencing shall be used around the perimeter of construction and staging areas. Staging will be phased to minimize impacts to the park to the extent feasible.	Installation of fencing around the perimeter of construction and staging areas prior to start of construction; Maintenance of fencing during construction; Development of a Staging Plan	Prior to the start of construction; During construction activities	City BOE	Completion of Staging Plan; Field inspection prior to the start of construction, followed by periodic field inspections during construction
Relocation of Unhoused Residents. Unhoused residents will be relocated and supported in accordance with the City of Los Angeles' Comprehensive Homeless Strategy and in coordination with City Council District 1 and appropriate agencies.	Site assessments to determine whether unhoused residents require relocation; Implementation of relocations in accordance the City's Comprehensive Homeless Strategy; Coordination of relocations with City Council District 1 and appropriate agencies	Prior to the start of construction	City BOE	Field inspection prior to the start of construction

1.2 SUPPLEMENTAL INFORMATION

The following supplemental information is provided for use by the CONTRACTOR:

1. Mitigation Monitoring Requirements, indicating required mitigation measures listed above (Attachment No. 6), and
2. Environmental Compliance Plan (Attachment No. 7).

END OF SECTION

THIS PAGE INTENTIONALLY LEFT BLANK

SECTION 01563
POLLUTION CONTROL - SEWAGE SPILL
PREVENTION AND RESPONSE REQUIREMENTS

1.1 THE REQUIREMENT

A. Spill Prevention and Emergency Response Plan:

1. The CONTRACTOR shall observe and comply with the CITY's policy of "ZERO SANITARY SEWER OVERFLOWS".

2. The CONTRACTOR shall be in full charge and be responsible for the Jobsite, the construction Work of this Contract, and subject to the directions of the ENGINEER or the INSPECTOR.

3. The CONTRACTOR shall observe and comply with all Federal, State, and local laws, ordinances, codes, orders, and regulations which in any manner affect the conduct of the work, specifically as it relates to sewage spills.

4. The CONTRACTOR shall be fully responsible for preventing sewage spillage, containing any sewage spillage, recovery, and legal disposal of any spilled sewage, any and all fines, penalties, claims and liability arising from negligently causing a sewage spillage and any violation of any law, ordinance, code, order, or regulation as a result of the spillage.

5. The CONTRACTOR shall exercise care not to damage existing public and private improvements, interrupt existing services and/or facility operations which may cause a sewage spill. Any reasonably anticipated utility and/or improvement which is damaged by the CONTRACTOR shall be immediately repaired at the CONTRACTOR's expense. In the event that the CONTRACTOR damages an existing utility, interrupts an existing service which causes a sewage spill, the CONTRACTOR shall immediately notify the CITY representatives. The CONTRACTOR shall request and obtain from the ENGINEER an emergency roster of the designated CITY representatives with their respective telephone numbers, pager numbers, and cellular phone numbers. The CONTRACTOR shall take all measures necessary to prevent further damage or service interruption, and to control, contain and clean up the resultant impacts of the damage, service interruption and any resulting sewage spill(s) as mentioned in Section 1.1.A. 6, below.

6. Prior to the start of construction, the CONTRACTOR shall develop and submit to the ENGINEER, for review and approval, a written Spill Response Plan in accordance with the City of Los Angeles Department of Public Works Brown Book 8th Edition. No construction activities shall be started without the approval of the submittal. The Spill Response Plan shall be developed to respond to any construction related sewage spill and the Contractor shall be responsible for resolving any sewage spills caused by the construction, whether the spill occurs on or off the project site. This plan shall include, but is not limited to:

    a. The CONTRACTOR shall identify all nearby waterways, channels, catch basins and entrances to underground existing storm drains and furnish all of the necessary materials, supplies, tools equipment, labor, and other services.

b. The CONTRACTOR shall make arrangements for an emergency response unit comprised of emergency response equipment and trained personnel to be immediately dispatched to the Jobsite in the event of a sewage spill(s).

c. The CONTRACTOR shall develop and include an emergency notification procedure, which includes an emergency response roster with telephone numbers and arrangements for backup personnel and equipment and an emergency notification roster of the design CITY representatives. The CONTRACTOR shall designate a primary and secondary representative and include their respective phone numbers, pager numbers, and cellular phone numbers. The CONTRACTOR's representatives shall be accessible and available at all times to respond immediately to any construction related emergency.

7. If called for in the Plans and/or Specifications, or if sewer bypass is needed to construct the Project, the CONTRACTOR shall continuously monitor the flow levels downstream and upstream of the construction location to detect and possible failure that may cause a sewage backup and spill. The CONTRACTOR shall include the means and methods of monitoring the flow in their Spill Response Plan.

8. In case of sewage spill, the CONTRACTOR shall act immediately without instructions from the CITY, to control the spill and take all appropriate steps to contain it in accordance with their Spill Response Plan. The CONTRACTOR shall immediately notify the CITY representatives of the spill and all actions taken. The CONTRACTOR shall, within three (3) working days from the occurrence of the spill, submit to the ENGINEER a written confirmation describing the following information related to the spill:
   a. The location on a current Thomas Bros. guide map.
   b. The nature and volume.
   c. The date and time of the spill.
   d. The duration of the spill.
   e. The cause of the spill.
   f. The type of remedial and/or preventive action taken and the date and time of implementation.
   g. The corrective and/or preventive action take to eliminate the possibility of a recurrence.
   h. The water body impacted.
   i. The results of any necessary monitoring.

9. Requests for additional compensation for the handling of the spill shall be submitted to the ENGINEER as a construction claim. The CONTRACTOR shall assure the validity, accuracy, and correctness of the claim under penalty of perjury. The ENGINEER may institute further corrective actions, as deemed necessary, to fully comply with existing law, ordinance, code, order or regulation. The CONTRACTOR shall be responsible for all costs incurred for the corrective actions.

10. It shall be the CONTRACTOR's responsibility to maintain written safety and emergency procedures at the job site, including the approved spill response plan, and to ensure that all field forces, including subcontractors, know and obey all safety and emergency procedures.

B. Closed Circuit Television (CCTV) Inspection Requirement:

1. The CONTRACTOR shall be responsible for working with the BOE permit district to obtain necessary permits and providing a CCTV inspection of the existing storm and sanitary sewers in locations where new diversions or connections are proposed. The contractor shall record the inspection in a digital format per brown book Section 500-1.1.5. The CCTV shall be performed by a bonded sewer contractor, in the presence of bureau of contract administration personnel.

2. Prior to CCTVing, the CONTRACTOR shall comply with all requirements stipulated in the pre/post CCTV checklist (sewer/storm) and notify the Bureau of Sanitation contact personnel listed on the notification roster of the required sewage spill prevention and response requirements and notify appropriate inspection office before noon on workday before inspection is required at: (213) 485-5080 or https://bca.lacity.org/dispatch.

3. The CCTV shall be conducted at two (2) construction stages:
   a. Prior to the start of construction and after the completion of the project.
   b. At each stage the CCTV and record log shall be submitted to the City of Los Angeles for review and confirmation that no damage has occurred to the sewer, and to obtain approval to continue with the next construction operation.

4. The video inspection shall cover the entire length of the sewer within the project limit or required reaches provided by WCED and shall be done in accordance with the latest edition of City of Los Angeles Brown Book, Section 500.

5. The CONTRACTOR shall complete and submit the pre/post CCTV checklist with the CCTV package to the district office and WCED.

   a. The CCTV package includes CCTV, record logs, the CCTV permit with inspector's name and phone number, design plans, and record of easement acknowledgement, if applicable. Submitted CCTV and record logs shall become a property of the CITY. the district office will forward the completed CCTV package to the clean water collection division at san.cwreview@lacity.org.

6. Any damage reviewed in the CCTV to the sewer resulting from construction activities shall be promptly repaired by the contractor/developer at their cost and to the satisfaction of the City of Los Angeles, Department of Public Work, Bureau of Engineering, Wastewater Conveyance Engineering Division and Structural Engineering Division and the Bureau of Sanitation. The decision of the aforementioned department concerning the extent of damage, as well as the required repair methodology is final.

7. CCTV for this Project is required for:

SHEET NO. CU-	U/S MH NO.	D/S MH NO.	STREET	PIPE LENGTH (FT)
101/107	51601467171011	51601466161030	S ALVARADO ST/ ALLEY/GRAND VIEW ST	1369'
108	516-01-128	516-01-322	W 7TH ST	738'

C. Sewer Bypass:

1. The CONTRACTOR shall provide temporary means to maintain and handle the sewage flow in the existing system as required to complete the necessary construction.

2. The CONTRACTOR shall prepare and submit a detailed bypass plan to the ENGINEER for approval of the ENGINEER and the facility OWNER before the bypass is installed.

3. The CONTRACTOR shall size the bypass system to handle the peak flow of the system. The CONTRACTOR shall include a one hundred percent (100%) backup in the bypass system. The CONTRACTOR shall utilize the backup system to mitigate any additional wet weather flows, perform the necessary maintenance and repairs on the bypass system, and exercise and ensure the operability of the backup system. Each pump, including the backup pumps, shall be a complete unit with its own suction and discharging pumping. The CONTRACTOR shall operate the backup bypass system for a minimum of twenty-five percent (25%) of the time on a weekly basis. The backup bypass system shall be fully installed and operational.

4. Prior to the full operation of the bypass system, the CONTRACTOR shall demonstrate, to the satisfaction of the ENGINEER and INSPECTOR, that both the primary and backup bypass systems are fully functional and adequate, and shall certify the same, in writing, to the ENGINEER in a manner acceptable to the ENGINEER.

5. The CONTRACTOR shall provide one dedicated fuel tank for every single pump/generator if fuel/generator driven pumps are used. The CONTRACTOR shall provide a fuel level indictor outside each fuel tank. The CONTRACTOR shall continuously (while in use) monitor the fuel level in the tanks and ensure that the fuel level does not drop below a level equivalent to two (2) hours of continuous bypass system operation. The CONTRACTOR shall take the necessary measures to ensure the fuel supply is protected against contamination. This includes, but is not limited to, fuel line water traps, fuel line filters, and protecting fuel stores from precipitation.

6. The CONTRACTOR shall provide an emergency standby power generator, if electric power-driven pumps are used.

7. The CONTRACTOR shall continuously (while in use) monitor the operation of the bypass system and all impacted facilities. The CONTRACTOR shall submit, as part of their bypass plan, their monitoring procedure and frequency. The

CONTRACTOR shall maintain a log of the monitoring in a manner acceptable to the ENGINEER and INSPECTOR.

8. The CONTRACTOR shall continuously monitor the flow levels downstream and upstream of the bypass to detect any possible failure that may cause a sewage backup and/or spill. The CONTRACTOR shall include the means and methods of monitoring the flow in their Spill Response Plan.

9. The CONTRACTOR shall routinely inspect and maintain the bypass system, including the backup system. The CONTRACTOR shall submit as part of their bypass plans their maintenance procedures and frequency. The CONTRACTOR shall maintain a log of all pertinent inspection, maintenance, and repair records in a manner acceptable to the ENGINEER and INSPECTOR.

10. All costs associated with sewer bypass requirements listed above (Section B-1 through 9) shall be included in the Bid Item "Sewer bypass system".

D. Additional Insurance Requirements:

1. The CONTRACTOR shall obtain and maintain an additional insurance coverage for Pollution Liability with limits and requirements set forth in Part III of the Proposal for Federal Funded projects, or Part IV of the Proposal for City funded projects. The limits and requirements for Pollution Liability shall be in an amount sufficient to cover potential losses from sudden and accidental pollution. All costs associated with the requirements for "Sewage Spill Prevention and Response Requirements", including additional insurance, shall be included in the prices bid for other related bid items. However, CONTRACTORS will be required to submit, with their bid, a cost breakdown for the items required by the "Sewage Spill Prevention and Response Requirements".

END OF SECTION

THIS PAGE INTENTIONALLY LEFT BLANK

SECTION 01571
STORMWATER POLLUTION CONTROL
MEASURES FOR CONSTRUCTION ACTIVITIES

1.1 THE REQUIREMENT

A. General:

1. The Contractor shall exercise every reasonable precaution to protect channels, storm drains, and bodies of water from pollution.

2. Conduct and schedule operations to minimize or avoid muddying and silting channels, drains, and waters.

3. As required, obtain permits for erosion and water pollution control from the appropriate jurisdictional agency before starting Work. All costs for work required for compliance with this Section shall be included within the Bid Prices.

.

4. Provide any necessary water pollution control devices to prevent, control, and abate water pollution, and implement good housekeeping pollution control measures to reduce the discharge of pollutants from work sites to the maximum extent practicable. These water pollution control devices include drains, gutters, slope protection blankets and retention basins and shall be constructed concurrently with other Work at the earliest practicable time.

5. Exercise care in preserving vegetation and protecting property, to avoid disturbing areas beyond the limits of the Work. Promptly repair any damage caused by Contractor operations.

6. Comply with the specific requirements based on acreage of disturbed soil.

7. Penalties: Failure to comply with this Section may result in significant fines and possible imprisonment. The RWQCB or other prosecuting authority may assess fines of up to $32,500 per day for each violation. Should the City be fined or penalized as a result of the Contractor failing to comply with this Section, the Contractor shall reimburse the City for any and all fines, penalties, and related costs.

8. Notification and Report: If pollution occurs in the work area for any reason or when the Contractor becomes aware of any violation of this Section, correct the problem and immediately notify the Inspector. In addition, submit a written report to the Engineer within seven (7) calendar days describing the incident and the corrective actions taken. If either the Inspector or Engineer is first to observe pollution or a violation, the Contractor shall also explain in the written report why the Work was inadequately monitored.

9. The provisions of this Section describe minimum compliance and do not preclude other more stringent stormwater pollution control measures that may be required in the Contract.

B. Definition:

1. Construction Activity: Includes clearing, grading, excavation, stockpiling, and reconstruction of existing facilities involving removal and replacement. Construction activity does not include routine maintenance such as maintenance of original line and grade, hydraulic capacity, or original purpose of the facility. If construction activity is part of a larger common plan of development, the amount of disturbed soil is the total land area of disturbed soil that results under the common plan.

C. Projects Having Less Than One Acre of Disturbed Soil:

Projects with construction activity that will result in less than one acre of disturbed soil, the Contractor shall comply with the following minimum water quality protection requirements:

1. Retain eroded sediments and other pollutants on-site and do not allow transportation from the site by sheet flow, swales, area drains, natural drainage, or wind. Control slope and channel erosion by implementing an effective combination of best management practices (BMPs). Such BMPs include scheduling grading during non-rainy seasons, planting and maintaining vegetation on slopes and covering erosion-susceptible slopes.

2. Protect stockpiles of earth and other construction-related materials from being transported from the site by wind or water.

3. Properly store and handle fuels, oils, solvents, and other toxic materials to not contaminate the soil or surface waters, enter the groundwater, or be placed where they may enter a live stream, channel, drain, or other water conveyance facility. Protect all approved toxic storage containers from weather. Clean spills immediately and properly dispose of cleanup materials. Spills shall not be washed into live streams, channels, drains, or other water conveyance facilities.

4. Do not wash excess or waste concrete into the public way or any drainage system. Retain concrete wastes on-site until they can be appropriately disposed of or recycled.

5. Deposit trash and construction-related solid wastes in covered receptacles to prevent contamination of rainwater and dispersal by wind.

6. Do not allow sediments and other materials to be tracked from the site by vehicle traffic. Stabilize construction entrance roadways to inhibit sediments from being deposited onto public ways. Immediately sweep up accidental depositions. Do not allow depositions to be washed away by rain or by any other means.

7. Contain non-stormwater runoff from equipment or vehicle washing and any other activity at the work site.

8. At completion of the Work, clear the worksite of debris and restore to a condition at least equal to or better than prior to construction.

9. When construction activity with grading is likely to occur during the rainy season (October 1 through April 15), prepare a Wet Weather Erosion Control Plan

(WWECP) per LAMC Section 61.02. The WWECP must be submitted to the Engineer for approval within thirty (30) calendar days after Notice to Proceed.

Guidance on preparing the WWECP can be found in "Development Best Management Practices Handbook - Part A, Construction Activities", adopted by the Board and as authorized by LAMC Section 64.72. The handbook can be viewed at or obtained at cost at Bureau of Engineering public counters.

10. When working in live streams, these are additional water pollution control requirements.

11. Erect barriers sufficient to prevent muddying or polluting streams.

12. Prior to removing materials from a flowing stream, use a stream bypass or other equivalent means to keep the flow in the stream free of the mud or silt from the removal operations.

13. Avoid transporting materials across live streams. If not possible, the transportation operation must be designed to prevent materials from falling into the stream and cannot muddy the stream.

14. Equipment may not be operated in a live stream or channel unless the Contractor can demonstrate to the Engineer's satisfaction that no other practical alternatives exist. The equipment must be designed to prevent materials from falling into the stream and cannot muddy the stream.

15. Do not allow fresh portland cement or fresh portland cement concrete to enter the water flowing in streams, channels, or drains.

16. Do not allow material derived from the Work to be deposited in a live stream, channel or drain.

D. Projects Having One Acre or More of Disturbed Soil:

Projects (including Linear Underground Projects) with construction activity that will result in one acre or more of disturbed soil, or less than one acre but part of a larger common plan of development, the Contractor shall comply with the requirements included in Section 1.1.C above, and the following requirements:

1. The Contractor shall comply with General Permit 2009-0009-DWQ for Discharges of Storm Water Associated with Construction Activities (General Permit). A copy of the General Permit may be downloaded from the California State Water Resources Control Board (SWRCB) website using the following link: https://www.waterboards.ca.gov/waterissues/programs/stormwater/construction.html.

2. The Contractor shall provide a Qualified Storm Water Pollution Prevention Plan (SWPPP) Developer (QSD) to prepare all Permit Registration Documents (PRDs), as defined in the General Permit. All PRDs must be uploaded to the SWRCB's General Permit web application called the Storm Water Multiple Application Report Tracking System (SMARTS) prior to commencement of construction activities. The SMARTS website link is: http://smarts.waterboards.ca.gov/smarts/faces/SwSmartsLogin.jsp. The PRDs include the Notice of Intent, Risk Assessment, Post-Construction Calculations, Site Map, SWPPP, and the first

annual fee. The Contractor must submit the prepared SWPPP to the City for review and approval prior to uploading it to the SMARTS system. Upon City approval, the SWPPP shall be uploaded by the Contractor and certified by the City's Legally Responsible Person (LRP). At that time, the actual fee invoice will be provided by the City to the Contractor and the Contractor will submit payment to the State for the first annual fee. The Contractor is also responsible for all subsequent annual fees for this project.

3. This project has been determined to be a Risk Level 2. The Contractor shall comply with all visual monitoring, effluent water quality sampling, reporting, and record keeping requirements associated with this Risk Level, in accordance with the General Permit. For projects with Risk Level 2 or Risk Level 3, the Contractor must prepare and implement a Rain Event Action Plan, as described in the General Permit.

4. The Contractor shall provide a Qualified SWPPP Practitioner (QSP) to implement all SWPPP requirements at the project site and monitor the effectiveness of the SWPPP, in accordance with the General Permit.

5. The Contractor shall prepare the Annual Report required by the General Permit and submit it to the City for review and approval by August 1st of each year. The City's LRP will certify the Annual Report.

6. The Contractor shall provide and submit all reports and data necessary to complete the Notice of Termination at the Completion of the Work, in accordance with the General Permit.

END OF SECTION

SECTION 01572
CONSTRUCTION AND DEMOLITION WASTE MANAGEMENT

1.1 THE REQUIREMENT:

A. The Construction and Demolition (C&D) Waste Management Specification includes procedures for ensuring optimal diversion of construction and demolition waste generated by the project, and documentation procedures for tracking waste generation and diversion.

B. Each construction or demolition project shall reuse or recycle a minimum of 80% of the inert debris and 65% of the remaining construction and demolition waste generated by the project.

C. Each construction or demolition project shall dispose of construction and demolition waste generated from the project in accordance with the City's C&D Waste Recycling Ordinance (Ordinance No. 181519). Los Angeles Municipal Code requires that all mixed C&D waste generated within the City of Los Angeles be taken to a City Certified C&D Waste Processing Facility and all source separated C&D waste be taken to a recycling facility or City Certified C&D Waste Processing Facility. Further, C&D waste can only be legally collected, removed, or transported by City of Los Angeles Permitted Solid Waste Haulers. If the Contractor plans on collecting, removing, or transporting its own waste, it must first apply for and obtain a Solid Waste Hauler Permit from the Solid Resources Citywide Recycling Division (SRCRD) of the Bureau of Sanitation.

D. Failure to meet the C&D waste recycling requirements as detailed above will result in the assessment of penalties up to $5,000 per each load of mixed C&D waste not taken to City Certified C&D Waste Processing Facility. Further, collecting, removing, or transporting C&D waste within the City without a valid Solid Waste Hauler Permit is a criminal misdemeanor subject to fines and/or imprisonment.

E. The project shall promote the City's sustainable building efforts by creating a resource-efficient and environmentally sensitive project and maintaining optimum control of the C&D waste generated during the project.

F. The project shall use products with post-consumer recycled content to the greatest extent feasible. Refer to the California Department of Resources Recycling and Recovery's website for information about recycled content construction products.

1.2 ABBREVIATIONS

A. C&D: Construction and Demolition.
B. CalMAX: California Materials Exchange.
C. CalRecycle: California Department of Resources Recycling and Recovery.
D. CCR: California Code of Regulations.
E. CDRG: Construction and Demolition Recycling Guide.
F. LEA: Local Enforcement Agency.
G. SWDD Report: Solid Waste Diversion and Disposal Report.
H. WMP: Waste Management Plan.

1.3 DEFINITIONS

A. "Certified C&D Waste Processing Facility" or "Certified C&D Waste Processor": A solid waste processing facility that accepts loads of C&D waste for the purpose of recovering re-usable and recyclable materials and disposing of the non-recyclable residual material. A Certified C&D Waste Processing Facility has been certified by the City of Los Angeles Bureau of Sanitation to have a facility specific recycling rate for C&D waste. For information on becoming a certified C&D waste processor, type in and search "waste hauler permit program" and then select the "waste hauler permit program" link at www.lacitysan.org. See the CDRG for information on the current list of certified processors and recycling facilities.

B. "Class III Landfill": A landfill that accepts non-hazardous solid waste such as household, commercial, and industrial solid waste. A Class III landfill is regulated by the LEA and must have a CalRecycle solid waste facilities permit.

C. "Construction and Demolition Recycling Guide": A publication by the Bureau of Sanitation's Solid Resources Citywide Recycling Division. The CDRG can be found by searching "waste hauler permit program" at www.lacitysan.org.

D. "C&D Waste" or "Mixed C&D Waste" or "C&D Debris or Mixed C&D Debris": Solid waste and recyclable materials, and building materials from construction, deconstruction, remodeling, repair, or demolition of buildings and other structures, do not contain hazardous waste (as defined in CCR Title 22, Section 66261.3, *et seq*.), and contain no more than one percent (1%) putrescible wastes by volume, calculated on a monthly basis. C&D waste includes, but is not limited to: asphalt, concrete, Portland cement, brick, lumber, drywall, roofing material, ceramic tile, pipe, glass, carpet and associated packaging.

E. "Deconstruction": The process of taking apart a structure with the primary goal of preserving the value of all useful building materials, so that they may be reused or recycled.

F. "Disposal": Acceptance of solid waste at a legally operating facility for the purpose of landfilling.

G. "Diversion": Activities that result in reducing the amount of solid waste disposed at a landfill. This can include source reduction activities, composting, recycling, and reuse.

H. "Inert Backfill Site": A location, other than inert fill or other disposal facility, to which inert debris is taken for the purpose of filling an excavation, shoring, or another soils engineering operation.

I. Inert Debris: Solid waste and recyclable materials that are source separated or separated for reuse and do not contain hazardous waste (as defined in CCR, Title 22, section 66261.3 et. seq.) or soluble pollutants at concentrations in excess of applicable water quality. Inert debris may not contain any putrescible wastes. Inert debris includes but is not limited to concrete, asphalt, crushed glass, fiberglass, asphalt or fiberglass roofing shingles, brick, slag, ceramics, plaster, clay, and clay products.

J. Inert Debris Engineered Fill Operation (IDEFO): An activity exceeding one year in duration in which only the following inert debris may be used: fully cured asphalt, uncontaminated concrete (including steel reinforcing rods embedded in the concrete), crushed glass, brick, ceramics, clay, and clay products, which may be mixed with rock and soil. Those materials are spread on land in lifts and compacted under controlled conditions to achieve a uniform and dense mass which is capable of supporting structural loading, as necessary, or supporting other uses such as recreation, agriculture and open space in order to provide land that is appropriate for an end use consistent with approved local general and specific plans (e.g., roads, building sites, or other improvements) where an engineered fill is required to facilitate productive use(s) of the land.

K. "Non-Permitted Solid Waste Hauler": A company that does not possess a valid and current solid waste hauler permit from the City of Los Angeles to collect and transport solid waste from individuals or businesses in the City of Los Angeles.

L. “Permitted Solid Waste Hauler”: A company that possesses a valid and current solid waste hauler permit from the City of Los Angeles to collect and transport solid waste from individuals or businesses in the City of Los Angeles.

M. “Recycling”: The process of collecting, sorting, cleansing, treating, and reconstituting materials that would otherwise become solid waste, and returning them to the economic mainstream in the form of raw material for new, reused, or reconstituted products that meet the quality standards necessary to be used in the marketplace.
   1. On-site Recycling: Materials that are sorted and processed for use in an altered form in the project, (e.g., concrete is crushed for use as base for a parking lot on the site).
   2. Off-site Recycling: Source-separated materials hauled to another location and used in an altered form in the manufacture of a new product.

N. “Recycling Facility”: An operation that can legally accept materials for the purpose of processing the materials into an altered form for the manufacture of a new product. Depending on the types of materials accepted and operating procedures, a recycling facility may or may not be required to have a Solid Waste Facilities permit from CalRecycle or be regulated by the LEA.

O. “Reuse”: Materials that are recovered for use in the same form. This includes materials that are reused on-site or off-site.

P. “Salvage”: Materials recovered for reuse or sale or donation to a third party.

Q. “Source Reduction”: Any action causing a net reduction in the generation of solid waste. Source reduction includes, but is not limited to, reducing the use of nonrecyclable materials, replacing disposable materials and products with reusable materials and products, reducing packaging, and reducing the amount of yard waste generated.

R. “Source-Separated Materials (Construction and Demolition Waste)”: Material that is sorted at the site of generation by individual material type for the purpose of reuse or recycling, i.e., loads of concrete that are source-separated for delivery to an inert debris recycling facility to be crushed into road base material. Note: The Contractor may be able to save money on collection fees for source-separated material. Source-separated material is not subject to the City’s 10% AB939 fee.

S. “Solid Waste”: shall mean waste that CalRecycle has deemed acceptable for disposal at a Class III Landfill and shall not include source-separated material.

T. “Transfer Station”: A facility that can legally accept solid waste for the purpose of temporarily storing the materials for re-loading onto other trucks and transporting them to a landfill for disposal or recovering some materials for reuse or recycling. Transfer stations must be permitted by CalRecycle and regulated by the LEA.

U. “Solid Waste Hauler” or “Waste Hauler”: shall mean any Person engaged in the business of providing or responsible for the collection, removal or transportation or Solid Waste, Construction and Demolition Waste, Source-Separated Materials,

V. “Solid Waste Hauler Permit”, “Waste Hauler Permit”, or “AB 939 Compliance Permit”: Persons who collect, remove or transport Solid Waste, including Construction and Demolition Waste, Source-Separated Materials or Co-Mingled Recyclables, generated within the City, must obtain, in addition to all other required permits, an AB 393 Compliance Permit from the Bureau of Sanitation.

1.4 DIVERSION REQUIREMENTS

A. The construction and demolition project shall reuse or recycle a minimum of 80% of the inert debris and 65% of the remaining construction and demolition waste generated by the project.

1.5 SUBMITTALS

A. Waste Management Plan (WMP): The Contractor shall conduct a site assessment and estimate the types and quantities of materials generated during the project, that are anticipated for on-site or off-site processing, recycling, or reuse.

1. After the contract is awarded and prior to the commencement of the project, the City project manager will schedule and attend a meeting with the Contractor to discuss the Contractor's proposed WMP. This plan shall be submitted to allow the City and the Contractor an opportunity to develop a mutual understanding regarding the recycling and reuse requirements and programs.
2. Not more than 20 working days after the meeting, and before the commencement of the project, the Contractor shall prepare and submit to the City project manager a written WMP, Attachment A of this specification, and a copy of the contracted hauler's solid waste hauler permit. The plan shall show a minimum 80% recycling for inert debris expected from the project and 65% recycling for the remaining C&D waste expected from the project. The Contractor shall submit the plan in the format provided herein as Attachment A. Instructions for filling out the form are in Attachment A, -- INSTRUCTION SHEET. Work shall not begin until the project engineer approves the WMP for the project.
3. If the Contractor expects a circumstance that the Contractor believes make it infeasible to comply with the Diversion Requirement, the Contractor may submit a written request for an exemption at the time the WMP is submitted. If the exemption request is not approved by the Engineer, the Contractor shall revise and resubmit a WMP.
4. If the City determines that it is infeasible for the Contractor to meet the Diversion Requirement due to unique circumstances, the City shall determine the maximum feasible diversion rate for each material and shall indicate this rate on the WMP submitted by the Contractor. The City shall return a copy of the WMP to the Contractor marked "Approved for Infeasible Exemption". The Contractor will be required to meet the maximum feasible diversion rates as approved by the City. If the Contractor fails to meet the revised rates the Contractor will be subject to the stipulated penalties. Exempt projects are required to keep and submit all documentation for the project. This includes receipts, the WMP, SWDD Reports, and all supporting documentation as required herein.
5. The City's approval of the Contractor's WMP will not otherwise relieve the Contractor of responsibility for adequate and continuing control of pollutants and other environmental protection measures.

B. Solid Waste Diversion and Disposal Report (SWDD Report): With each submittal of the Contractor's application for progress payment, the Contractor shall prepare and submit to the project inspector a written SWDD Report quantifying all material generated, diverted, and disposed in the project during the time period covered by the SWDD Report and progress payment. Part 3 of each SWDD Report is a cumulative history of the diversion and disposal for the project. The Contractor shall submit the report in the format provided herein as shown in Attachment B. Failure to submit the report and the supporting documentation shall render the application for progress payment incomplete and delay payment until the proper documentation is submitted. The supporting documentation includes manifests, weight tickets, receipts, reports, invoices, and other supporting documents specifically identifying the projects, the recyclables and solid waste generated by the project, and where the material was sent. Instructions for filling out the forms are in Attachment B – INSTRUCTION SHEET. Together, all of the SWDD Reports should cover the complete time period of the project. The final SWDD Report and supporting documentation must be submitted within 30 days of the end of the project.

C. Substitutions: Should the Contractor desire to use materials, equipment, or products that meet the requirements of these specifications but are more environmentally responsive, the Contractor shall submit these substitutions in accordance with “Substitutions and “Or Equal” Submittals” of the General Requirements.

1.6 PENALTY

A. If the diversion requirement has not been met, a per ton penalty will be applied to the disposed material over that allowed in the approved WMP.
B. The penalty will be calculated as follows: Tons over that allowed in the approved WMP times the per-ton penalty in effect at the time the contract was awarded. The penalty may not exceed the total payment retention for the project.
C. Tons of mixed C&D waste either not hauled to City Certified C&D Waste Processing Facilities or hauled by non-permitted waste hauler(s) will be assessed a per-ton penalty. The penalty may not exceed the total payment retention for the project.
D. The penalty is $100 per ton.
E. The recommended penalty will be determined by the Bureau of Contract Administration and Bureau of Sanitation and shall be considered by the Board of Public Works at the time of the project closeout.

1.7 REUSE, SALVAGE, AND RECYCLING OPTIONS

A. Construction projects shall make use of as many reuse and salvage options as is feasible. One option is the California Materials Exchange (CalMAX), a free program sponsored by CalRecycle. The most recent issue of CDRG contains contact information for non-profit organizations, salvage facilities, and other reuse organizations.
B. Recycling shall include both on-site and off-site recycling of source-separated materials, as well as mixed C&D waste recycling efforts.
C. On-site recycling programs shall produce a quality product to meet the specifications identified in the contract documents, subject to approval. The Contractor shall estimate the amount of material to be used in the project and include a program for off-site recycling of any excess material that cannot be used in the project.
D. The Contractor shall develop and implement a program to include source separation of solid waste, to the greatest extent feasible, of the following types:
    1. Asphalt.
    2. Concrete, concrete block, slump stone (decorative concrete block).
    3. Rock.
    4. Wood (lumber).
    5. Green material (i.e., tree trimmings).
    6. Other materials, as appropriate, such as red clay brick, building fixtures, architectural details, dry wall, carpet, carpet padding, and corrugated cardboard.
E. Mixed C&D Waste Recycling: The Contractor must develop and implement a program to transport all commingled construction and demolition materials that cannot be feasibly source-separated to a Certified C&D Waste Processing Facility.
F. Certified C&D Waste Processing Facility: These facilities have facility recycling rates, established by the City of Los Angeles for mixed C&D waste. Mixed C&D waste taken to these facilities are considered to have been recycled at the rate of the certified processing facility. For example, 100 tons of material taken to a facility with an 80% recycling rate results in 80 tons of recycling and 20 tons of disposal for the project A list of these facilities and their recycling rates is in the most recent issue of CDRG.
G. Recycling, Reuse, Mixed C&D Waste Processing, and Salvage Facilities: The CDRG is incorporated herein by reference and contains information about processing, recycling, reuse, and salvage facilities.

H. Revenue: Revenue or savings obtained from recycled, reused, or salvaged materials shall accrue to the Contractor unless otherwise noted in the Contract Documents. Note: The Contractor may be able to save money on collection fees for source-separated material. Source-separated material is not subject to the City's 10% AB939 fee.

I. AB 939 Fee: The AB 939 fee is assessed on all solid waste hauled within the City of Los Angeles in accordance with Section 66.32 of the Los Angeles Municipal Code.
   1. All solid waste haulers hauling material from City of Los Angeles locations must be permitted in accordance with Section 66.32 of the Los Angeles Municipal Code.
   2. Source-separated material is not assessed this fee.

1.8 HAULING AND DISPOSAL OPERATIONS

A. Hauling: The Contractor is responsible for arranging the collection and hauling of C&D waste by a solid waste hauler that is permitted by the City of Los Angeles in accordance with Section 66.32 of the Los Angeles Municipal Code.

B. Recycling and Processing Facilities: The Contractor shall be responsible for transporting C&D waste to recycling or processing facilities. The Contractor shall be familiar with the requirements for acceptance of C&D waste at the recycling and processing facilities before the material is delivered. The most recent issue of CDRG includes a partial list of these facilities. Always call facilities in advance.

C. Disposal Facilities: The Contractor shall be responsible for transporting C&D waste that cannot be accepted at a recycling or processing facility, to a transfer station or disposal facility that can legally accept the materials for the purpose of disposal. A load of C&D waste may be taken to a disposal facility only after it has been rejected by 2 different certified processing facilities and the driver is in possession of both rejection slips. The rejection slips and the weight ticket from the final destination must be kept together and submitted to the contractor.

D. Site Disposal: The Contractor may not burn, bury, or otherwise dispose of solid waste on the project jobsite.

END OF SECTION

(SEE ATTACHMENT)

ATTACHMENTS TO SECTION 01572

Attachments to General Requirements Section 01572 consists of one (11) document, as follows:

ATTACHMENT NUMBER	TITLE OF ATTACHMENT	NUMBER OF PAGES IN THIS ATTACHMENT
01572-A1	Instruction Sheet for Waste Management Plan	1
01572-A2	Waste Management Plan (Part 1-Inert Debris)	1
01572-A3	Waste Management Plan (Part 2-All Other C&D Waste)	1
01572-A4	Example Waste Management Plan (Part 1-Inert Debris)	1
01572-A5	Waste Management Plan (Part 2-All Other C&D Waste)	1
01572-B1	Instruction Sheet for Solid Waste Diversion & Disposal Report	1
01572-B2	Solid Waste Diversion and Disposal Report Part 1 Of 3 - Inert Debris	1
01572-B3	Solid Waste Diversion and Disposal Report Part 2 Of 3 - All Other C&D Waste	1
01572-B4	Solid Waste Diversion and Disposal Report Part 3 Of 3 - Project Cumulative Total	1
01572-B5	Example Solid Waste Diversion and Disposal Report for Progress Payment #1	3
01572-B6	Example Solid Waste Diversion and Disposal Report for Progress Payment #2	3

ATTACHMENT A - INSTRUCTION SHEET FOR WASTE MANAGEMENT PLAN

1. For assistance, contact the Solid Resources Citywide Recycling Division of LA Sanitation & Environment at (213) 485-3460 or sansrcrd_cdrecycling@lacity.org.
2. Please print very clearly or type.
3. Waste Management Plan (WMP) is to be completed and approved prior to start of construction. Along with the WMP, the Contractor is to include a copy of the waste hauler's waste hauler permit.
4. Attachment A includes**: Part 1-**Inert Debris and **Part 2**-Metal, Wood, C&D waste, and all other materials.
5. Must meet ≥80% recycling rate in **Part 1** – Inert Debris such as concrete, asphalt, dirt, rock, and brick.
6. Must meet ≥65% recycling rate in **Part 2** – Metal, wood, green waste, C&D waste, and all other materials.
7. The information required includes but is not limited to, the following:
   a. Contractor and project work order number.
   b. Permitted solid waste hauler(s) and permit number(s).
   c. Facility names and addresses that are to process the C&D materials.
   d. Estimated quantities of **all** C&D materials listed in **tons**.
   e. Verify whether the Waste Management Plan meets the minimum recycling requirement of 80% for inert debris in Part 1. Verify whether the Waste Management Plan meets the minimum recycling requirement of 65% for other C&D waste.
8. **Calculating recycling and disposal for mixed C&D waste taken to a certified processing facility: the total tons taken to certified processing facility times the recycling rate = amount to be recycled. Total tons taken to facility minus amount to be recycled = amount for disposal, e.g., 100 tons x 0.80 (80% recycling rate) = 80 tons diverted and 20 tons disposed.

ATTACHMENT A
WASTE MANAGEMENT PLAN (PART 1-INERT DEBRIS)

Project Title:	W. O. Number:	Date Submitted:
Name & Title of Responsible Person:	Signature:	
Permitted Waste Hauler Name(s) and Permit No(s):		

Material	Facility Name and Address	Tons Diverted	Tons Disposed
RECYCLING/REUSE			
Asphalt			
Concrete			
Brick			
Dirt			
Mixed Inerts			
Other (Describe)			
Other (Describe)			
DISPOSAL			
Other (Describe)			
Other (Describe)			
Other (Describe)			
DIVERSION AND DISPOSAL TOTALS =			

Percent Recycling = $\frac{\text{Total diversion}}{\text{Total diversion + Total disposed}}$ X 100 =

Percent Recycling = $\frac{\quad}{+}$ X 100 = %

Does Part 1 (Inert Debris) of this Waste Management Plan meet the minimum recycling requirement of 80% for Inert Debris?

YES ☐ NO ☐

ATTACHMENT A
WASTE MANAGEMENT PLAN (PART 2-ALL OTHER C&D WASTE)

W. O. No.:	Date Submitted:

Contractors Name:

Street address:

City, State, Zip:

Phone: Fax: Email:

Permitted Waste Hauler Name(s) and Permit No(s):

Material	Facility Name and Address	Tons Diverted	Tons Disposed
RECYCLING/REUSE			
Glass			
Wood/Greenwaste			
Metal			
Cardboard			
Other (Describe)			
DISPOSAL			
Other (Describe)			
Other (Describe)			
CERTIFIED PROCESSING**			
Mixed C&D Waste			
Mixed C&D Waste			
DIVERSION AND DISPOSAL TOTALS =			

Percent Recycling = $\frac{\text{Total Diversion}}{\text{Total Diversion + Total Disposed}}$ X 100 =

Percent Recycling = $\frac{\quad}{+}$ X 100 = %

Does Part 2 (All Other C&D Waste) of this Waste Management Plan meet the minimum recycling requirement of 65% for all other C&D Waste? YES ☐ NO ☐

****Recycling tonnages for mixed C&D waste taken to a certified processing facility = total tonnage x recycling rate. Remaining tonnage counts as disposal. Example: 200 tons x 0.80 = 160 tons diverted and 40 tons disposed.**

EXAMPLE WASTE MANAGEMENT PLAN
ATTACHMENT A
WASTE MANAGEMENT PLAN (PART 1-INERT DEBRIS)

Project Title: *Big Street Overcrossing*	W. O. Number: *XYZ12345*	Date Submitted: *01/01/2020*
Name & Title of Responsible Person: *Bobby Lee, Project Manager*	Signature: *Bobby Lee*	
Permitted Waste Hauler Name(s) and Permit No(s): *Grava Gravel Haulers, PER-22-333*		

Material	Facility Name and Address	Tons Diverted	Tons Disposed
RECYCLING/REUSE			
Asphalt	*Inert Recycling Facility A,888 Valle Valley, CA 12345*	*600*	
Concrete	*Inert Recycling Facility A,888 Valle Valley, CA 12345*	*55*	
Brick	*Inert Recycling Facility B, 777 Valle Valley, CA 12345*	*6*	
Dirt	*The Landscaping Co., 222 Valle Valley, CA 12345*	*200*	
Mixed Inerts			
Other (Describe)			
Other (Describe)			
DISPOSAL			
Other (Describe)			
Other (Describe)			
Other (Describe)			
DIVERSION AND DISPOSAL TOTALS =		*861*	

$$\text{Percent Recycling} = \frac{\text{Total diversion}}{\text{Total diversion + Total disposed}} \times 100 =$$

$$\text{Percent Recycling} = \frac{861}{861 + 0} \times 100 = 100.00\ \%$$

Does Part 1 (Inert Debris) of this Waste Management Plan meet the minimum recycling requirement of 80% for Inert Debris?

YES ☒ NO ☐

ATTACHMENT A
WASTE MANAGEMENT PLAN (PART 2-ALL OTHER C&D WASTE)

W. O. No.: XYZ12345	Date Submitted: 01/01/2020

Contractors Name: Awesome Engineering Contractors

Street address: Circular Drive

City, State, Zip: *Ciudad City, CA 12345*

Phone: (123) 456-7891 Fax: (321) 123-4567 Email: AEC@zmail.com

Permitted Waste Hauler Name(s) and Permit No(s):

Material	Facility Name and Address	Tons Diverted	Tons Disposed
RECYCLING/REUSE			
Glass			
Wood/Greenwaste	*The Landscaping Co., 222 Valle Valley, CA 12345*	*50*	
Metal	*Kim Loai Metal Recycling, 333 Camino St, CA 12345*	*6*	
Cardboard			
Other (Describe)			
DISPOSAL			
Other (Describe)	*Municipal Landfill, 456 Montana Mountains, CA 12345*		*15*
Other (Describe)			
CERTIFIED PROCESSING**			
Mixed C&D Waste	*Certified Processor A (Recycling Rate = 75% = 0.75)*	*18.75*	*6.25*
Mixed C&D Waste	*25 tons x 0.75 = 18.75 tons recycled and 6.25 tons disposed*		
DIVERSION AND DISPOSAL TOTALS =		*74.75*	*21.25*

$$\text{Percent Recycling} = \frac{\text{Total Diversion}}{\text{Total Diversion + Total Disposed}} \times 100 =$$

$$\text{Percent Recycling} = \frac{74.75}{74.75 + 21.25} \times 100 = 77.86\ \%$$

Does Part 2 (All Other C&D Waste) of this Waste Management Plan meet the minimum recycling requirement of 65% for all other C&D Waste? YES ☒ NO ☐

****Recycling tonnages for mixed C&D waste taken to a certified processing facility = total tonnage x recycling rate. Remaining tonnage counts as disposal. Example: 200 tons x 0.80 = 160 tons diverted and 40 tons disposed.**

ATTACHMENT B - INSTRUCTION SHEET FOR SOLID WASTE DIVERSION & DISPOSAL REPORT

1. For assistance, contact the Solid Resources Citywide Recycling Division of LA Sanitation & Environment at (213) 485-3460 or sansrcrd_cdrecycling@lacity.org.
2. Please print very clearly or type.
3. All **three (3) pages** of Attachment B and **all** manifests, weight tickets, receipts, reports, invoices, and other supporting documents specifically identifying the projects, the recyclables and solid waste generated by the project, and where the material was sent must be submitted to the inspector with each application for progress payment.
4. Attachment B includes**: Part 1** - Inert Debris, **Part 2** - All Other C&D Waste, **Part 3** - Project Cumulative Total.
5. Must meet ≥80% recycling rate for Inert Debris by end of construction.
6. Must meet ≥65% recycling rate in Metal, wood, green waste, C&D waste, and all other materials by end of construction.
7. In **Part 1 and Part 2,** record:
    a. Material type generated.
    b. Permitted solid waste hauler(s) and permit number(s).
    c. Facility names and addresses where materials were delivered.
    d. Tons diverted/disposed for a particular pay period.
    e. Verify whether Part 1 meets the minimum recycling requirement of 80% for Inert Debris. Verify whether Part 2 meets the minimum recycling requirement of 65% for other C&D Waste. Contractor is to meet the minimum recycling requirements by the end of construction.
8. In **Part 3**, record:
    a. Pay period beginning and period ending
    b. Diversion and disposal for the pay period and cumulative diversion and disposal for the project
    c. Cumulative waste generated (diversion + disposal) for the project
    d. Cumulative recycling rate for the project (diverted/generated)*100
9. The information required includes but is not limited to, the following:
    a. Contractor and project identification information
    b. Actual quantities of **all** materials listed in tons

10. Source-separated material taken to a recycling facility or certified processing facility is 100% recycled.
11. **Calculating recycling and disposal for mixed material taken to a certified processing facility: the total tons taken to certified processing facility times the recycling rate = amount to be recycled. Total taken to facility minus amount to be recycled = amount for disposal. E.g., 100 tons x 0.80 (80% recycling rate) = 80 tons diverted and 20 tons disposed.

ATTACHMENT B
SOLID WASTE DIVERSION AND DISPOSAL REPORT
PART 1 OF 3 - INERT DEBRIS

Project Title:	W. O. Number:	Date Submitted:	Progress Payment #
Company Name: Daytime Phone Number:			
Period Covered In This Report: From: To:			
Permitted Waste Hauler Name(s) and Permit No(s):			

Material	Facility Name and Address	Tons diverted	Tons Disposed
RECYCLING/REUSE			
Asphalt			
Concrete			
Brick			
Dirt			
Mixed Inerts			
Other (Describe)			
Other (Describe)			
DISPOSAL			
Other (Describe)			
Other (Describe)			
Other (Describe)			
DIVERSION AND DISPOSAL TOTALS * =			

***Copy the Tons Diverted and Tons Disposed totals to Part 3 Project Cumulative Total. Each Report needs to have the totals from every previous Diversion and Disposal Report documented on it, as well as the totals from this Report.**

ATTACHMENT B
SOLID WASTE DIVERSION AND DISPOSAL REPORT
PART 2 OF 3 - ALL OTHER C&D WASTE

W. O. Number:	Date Submitted:

Permitted Waste Hauler Name(s) and Permit No(s):

Material	Facility Name and Address	Tons Recycled	Tons Disposed
RECYCLING/REUSE			
Metal			
Wood / Lumber			
Greenwaste / Landscaping			
Glass			
Cardboard			
Other (Describe)			
Other (Describe)			
DISPOSAL			
Mixed Solid Waste			
Other (Describe)			
Other (Describe)			
CERTIFIED PROCESSING**			
Mixed C&D Waste			
Mixed C&D Waste			
Mixed C&D Waste			
DIVERSION AND DISPOSAL TOTALS* =			

***Copy the Tons Diverted and Tons Disposed totals to Part 3 Project Cumulative Total. Each Report needs to have the totals from every previous Diversion and Disposal Report documented on it, as well as the totals from this Report.**

****Recycling tonnages for mixed C&D waste taken to a certified facility = total tonnage x recycling rate. Remaining tonnage counts as disposal. Example: 200 tons x 0.80 = 160 tons diverted and 40 tons disposed.**

ATTACHMENT B
SOLID WASTE DIVERSION AND DISPOSAL REPORT
PART 3 OF 3 - PROJECT CUMULATIVE TOTAL

W. O. Number:				Date Submitted:			
Period Beginning	Period Ending	*Period Diversion	Cumulative Project Diversion, **R**	*Period Disposal	Cumulative Project Disposal, **D**	Cumulative Waste **G**enerated **R + D**	Cumulative Recycling % (**R**/**G**)100
INERT DEBRIS CUMULATIVE PROJECT HISTORY, REFER TO ATTACHMENT B PART 1 OF							
ALL OTHER C&D WASTE CUMULATIVE PROJECT HISTORY, REFER TO ATTACHMENT B PART 2 OF 3							
Does this Report meet the minimum recycling requirement of 80% for Inert Debris and 65% for All Other C&D Waste? Contractor is to meet the minimum recycling requirements of 80% for Inert Debris and 65% for All Other C&D Waste by the end of construction. YES ☐ NO ☐							
Name & title of person responsible for the information in this form:				Signature:			

***From appropriate Part 1 or 2 during each period.**
Each Attachment B Part III Report needs to have the Tons Diverted and Tons Disposed from every previous Diversion and Disposal Report documented in it, as well as the totals from this Report.
Attach another Part III form and continue information if more rows are needed.

EXAMPLE SOLID WASTE DIVERSION AND DISPOSAL REPORT FOR PROGRESS PAYMENT #1

ATTACHMENT B
SOLID WASTE DIVERSION AND DISPOSAL REPORT
PART 1 OF 3 - INERT DEBRIS

Project Title: *Big Street Overcrossing*	W. O. Number: *XYZ12345*	Date Submitted: *03/15/2020*	Progress Payment *# 1*
Company Name: *Awesome Engineering Contractors* Daytime Phone Number: *(123)456-7891*			
Period Covered In This Report: From: *2/1/2020* To: *2/28/2020*			
Permitted Waste Hauler Name(s) and Permit No(s): *Grava Gravel Haulers, PER-22-333*			

Material	Facility Name and Address	Tons diverted	Tons Disposed
RECYCLING/REUSE			
Asphalt	*Inert Recycling Facility A,888 Valle Valley, CA 12345*	*45*	
Concrete	*Inert Recycling Facility A,888 Valle Valley, CA 12345*	*10*	
Brick	*Inert Recycling Facility B, 777 Valle Valley, CA 12345*	*6*	
Dirt	*The Landscaping Co., 222 Valle Valley, CA 12345*	*150*	
Mixed Inerts			
Other (Describe)			
Other (Describe)			
DISPOSAL			
Other (Describe)			
Other (Describe)			
Other (Describe)			
DIVERSION AND DISPOSAL TOTALS * =		*211*	

***Copy the Tons Diverted and Tons Disposed totals to Part 3 Project Cumulative Total. Each Report needs to have the totals from every previous Diversion and Disposal Report documented on it, as well as the totals from this Report.**

ATTACHMENT B
SOLID WASTE DIVERSION AND DISPOSAL REPORT
PART 2 OF 3 - ALL OTHER C&D WASTE

W. O. Number: *XYZ12345*	Date Submitted: *03/15/2020*

Permitted Waste Hauler Name(s) and Permit No(s): *Grava Gravel Haulers, PER-22-333*

Material	Facility Name and Address	Tons Recycled	Tons Disposed
RECYCLING/REUSE			
Metal	*Kim Loai Metal Recycling, 333 Camino St, CA 12345*	*2*	
Wood / Lumber	*The Landscaping Co., 222 Valle Valley, CA 12345*	*15*	
Greenwaste / Landscaping			
Glass			
Cardboard			
Other (Describe)			
Other (Describe)			
DISPOSAL			
Mixed Solid Waste	*Municipal Landfill, 456 Montana Mountains, CA 12345*		*1*
Other (Describe)			
Other (Describe)			
CERTIFIED PROCESSING**			
Mixed C&D Waste	*Certified Facility A (Recycling Rate = 75% = 0.75)*	*9*	*3*
Mixed C&D Waste	*12 tons x 0.75 = 9.00 tons recycled and 3.00 tons disposed*		
Mixed C&D Waste			
Mixed C&D Waste			
DIVERSION AND DISPOSAL TOTALS* =		*26*	*4*

***Copy the Tons Diverted and Tons Disposed totals to Part 3 Project Cumulative Total. Each Report needs to have the totals from every previous Diversion and Disposal Report documented on it, as well as the totals from this Report.**
****Recycling tonnages for mixed C&D waste taken to a certified facility = total tonnage x recycling rate. Remaining tonnage counts as disposal. Example: 200 tons x 0.80 = 160 tons diverted and 40 tons disposed.**

ATTACHMENT B
INERT SOLID WASTE DIVERSION AND DISPOSAL REPORT
PART 3 OF 3 - PROJECT CUMULATIVE TOTAL

W. O. Number: *XYZ12345*			Date Submitted: *03/15/2020*				
Period Beginning	Period Ending	*Period Diversion	Cumulative Project Diversion, **R**	*Period Disposal	Cumulative Project Disposal, **D**	Cumulative Waste **G**enerated **R + D**	Cumulative Recycling % (**R**/**G**)100
INERT DEBRIS CUMULATIVE PROJECT HISTORY, REFER TO ATTACHMENT B PART 1 OF 3							
2/1/2020	*2/28/2020*	*211*	*211*	*0*	*0*	*211*	*100(211/211)= 100.00*
ALL C&D OTHER WASTE CUMULATIVE PROJECT HISTORY, REFER TO ATTACHMENT B PART 2 OF 3							
2/1/2020	*2/28/2020*	*26*	*26*	*4*	*4*	*26+4=30*	*100(26/30)= 86.67*
Does this Report meet the minimum recycling requirement of 80% for Inert Debris and 65% for All Other C&D Waste? Contractor is to meet the minimum recycling requirements of 80% for Inert Debris and 65% for All Other C&D Waste by the end of construction. YES ☒ NO ☐							
Name & title of person responsible for the information in this form: *Bobby Lee, Project Manager*			Signature: *Bobby Lee*				

***From appropriate Part 1 or 2 during each period.**
Each Attachment B Part III Report needs to have the Tons Diverted and Tons Disposed from every previous Diversion
and Disposal Report documented in it, as well as the totals from this Report.

Attach another Part III form and continue information if more rows are needed.

EXAMPLE SOLID WASTE DIVERSION AND DISPOSAL REPORT FOR PROGRESS PAYMENT #2

ATTACHMENT B
SOLID WASTE DIVERSION AND DISPOSAL REPORT
PART 1 OF 3 - INERT DEBRIS

Project Title: *Big Street Overcrossing*	W. O. Number: *XYZ12345*	Date Submitted: *04/15/2020*	Progress Payment *# 2*

Company Name: *Awesome Engineering Contractors* Daytime Phone Number*: (123)456-7891*

Period Covered In This Report:

From: *3/1/2020* To: *3/31/2020*

Permitted Waste Hauler Name(s) and Permit No(s): *Grava Gravel Haulers, PER-22-333*

Material	Facility and Location	Tons diverted	Tons Disposed
RECYCLING/REUSE			
Asphalt	*Inert Recycling Facility A,888 Valle Valley, CA 12345*		
Concrete	*Inert Recycling Facility A,888 Valle Valley, CA 12345*	*300*	
Brick	*Inert Recycling Facility B, 777 Valle Valley, CA 12345*		
Dirt	*The Landscaping Co., 222 Valle Valley, CA 12345*	*100*	
Other (Describe)			
Other (Describe)			
DISPOSAL			
Other (Describe)			
Other (Describe)			
Other (Describe)			
DIVERSION AND DISPOSAL TOTALS * =		*400*	

***Copy the Tons Diverted and Tons Disposed totals to Part 3 Project Cumulative Total. Each Report needs to have the totals from every previous Diversion and Disposal Report documented on it, as well as the totals from this Report.**

ATTACHMENT B
SOLID WASTE DIVERSION AND DISPOSAL REPORT
PART 2 OF 3 - ALL OTHER C&D WASTE

W. O. Number: *XYZ12345*	Date Submitted: *04/15/2020*

Permitted Waste Hauler Name(s) and Permit No(s): *Grava Gravel Haulers, PER-22-333*

Material	Facility and Location	Tons Recycled	Tons Disposed
RECYCLING/REUSE			
Metal	*Kim Loai Metal Recycling, 333 Camino St, CA 12345*	*1*	
Wood / Lumber	*The Landscaping Co., 222 Valle Valley, CA 12345*	*16*	
Greenwaste / Landscaping			
Glass			
Cardboard			
Other (Describe)			
Other (Describe)			
DISPOSAL			
Mixed Solid Waste	*Municipal Landfill, 456 Montana Mountains, CA 12345*		*1*
Other (Describe)			
Other (Describe)			
Other (Describe)			
CERTIFIED PROCESSING**			
Mixed C&D Waste	*Certified Processor A (Recycling Rate = 75% = 0.75)*	*7.5*	*3.5*
Mixed C&D Waste	*10 tons x 0.75 = 7.5 tons recycled and 2.5 tons disposed*		
Mixed C&D Waste			
Mixed C&D Waste			
DIVERSION AND DISPOSAL TOTALS* =		*24.5*	*4.5*

***Copy the Tons Diverted and Tons Disposed totals to Part 3 Project Cumulative Total. Each Report needs to have the totals from every previous Diversion and Disposal Report documented on it, as well as the totals from this Report.**
****Recycling tonnages for mixed C&D waste taken to a certified facility = total tonnage x recycling rate. Remaining tonnage counts as disposal. Example: 200 tons x 0.80 = 160 tons diverted and 40 tons disposed.**

ATTACHMENT B
INERT SOLID WASTE DIVERSION AND DISPOSAL REPORT
PART 3 OF 3 - PROJECT CUMULATIVE TOTAL

W. O. Number: *XYZ12345*				Date Submitted: *04/15/2020*			
Period Beginning	Period Ending	*Period Diversion	Cumulative Project Diversion, **R**	*Period Disposal	Cumulative Project Disposal, **D**	Cumulative Waste **G**enerated **R + D**	Cumulative Recycling % (**R**/**G**)100
INERT DEBRIS CUMULATIVE PROJECT HISTORY, REFER TO ATTACHMENT B PART 1 OF 3							
2/1/2020	*2/28/2020*	*211*	*211*	*0*	*0*	*211*	*100(211/211)= 100.00*
3/1/2020	*3/31/2020*	*400*	*211+400=611*	*0*	*0*	*211+400=611*	*100(611/611)= 100.00*
ALL OTHER C&D WASTE CUMULATIVE PROJECT HISTORY, REFER TO ATTACHMENT B PART 2 OF 3							
2/1/2020	*2/28/2020*	*26*	*26*	*4*	*4*	*26+4=30*	*100(26/30)= 86.67*
3/1/2020	*3/31/2020*	*24.5*	*26+24.5=50.5*	*4.5*	*4+4.5=8.5*	*50.5+8.5=59*	*100(50.5/59)= 85.59*

Does this Report meet the minimum recycling requirement of 80% for Inert Debris and 65% for All Other C&D Waste? Contractor is to meet the minimum recycling requirements of 80% for Inert Debris and 65% for All Other C&D Waste by the end of construction.

YES ☒ NO ☐

Name & title of person responsible for the information in this form: *Bobby Lee, Project Manager*	Signature: *Bobby Lee*

***From appropriate Part I or II during each period.**
Each Attachment B Part III Report needs to have the Tons Diverted and Tons Disposed from every previous Diversion and Disposal Report documented in it, as well as the totals from this Report. Attach another Part III form and continue information if more rows are needed.

THIS PAGE INTENTIONALLY LEFT BLANK

SECTION 01573
EXCAVATION, SHORING, FORMS, AND FALSEWORK

1.1 THE REQUIREMENT

A. The CONTRACTOR shall have at the Worksite, copies or suitable extracts of: Construction Safety Orders, Tunnel Safety Orders and General Industry Safety Orders issued by the State Division of Industrial Safety. The CONTRACTOR shall comply with provisions of these and all other applicable laws, ordinances, and regulations.

B. Before excavating any trench 1.5 m (5 feet) or more in depth, the CONTRACTOR shall submit a detailed plan to the CITY showing the design of shoring, bracing, sloping, or other revisions to be made for the Workers' protection from the hazard of caving ground during the excavation of such trench. The plan and calculations shall be prepared by a California registered Civil or Structural ENGINEER. No excavation shall start until the ENGINEER has accepted the plan and the CONTRACTOR has obtained a permit from the State Division of Industrial Safety. A copy of the permit shall be submitted to the ENGINEER and INSPECTOR.

C. Whenever work under the Contract involves trench excavation five (5) feet or more in depth, or any kind of shoring, the CONTRACTOR shall design and prepare plans for the required shoring, bracing, and sloping. The shoring plans and calculations shall also be submitted to the City of Los Angeles Department of Building and Safety to obtain required plan check and permit, in advance of excavation to ensure workers' protection from the hazard of caving ground during the excavation and to support adjacent private property with zero lateral and vertical deflection of the shoring system. All costs therefore shall be included in the price named in the Contract for completion of the Work as set forth in the Contract Documents.

D. Nothing in this Section shall be deemed to allow the use of a shoring, sloping, or other protective system less effective than that required by the CAL/OSHA Construction Safety Orders.

E. Nothing in this Article shall be construed to impose liability on the CITY, ENGINEER, INSPECTOR, or any of their officers, agents, representatives, or employees.

F. The CONTRACTOR shall secure approval, in advance, from authorities concerned for the use of any bridges proposed by it for public use. Temporary bridges shall be clearly posted as to load limit and speed limits, with signs and posting conforming to current requirements set forth in the Traffic Manual published by the California Department of Transportation, covering "signs". This manual shall also apply to the street closures, barricades, detours, lights, and other safety devices required.

G. The INSPECTOR will provide a competent person trench/excavation certification form to the CONTRACTOR. It shall be completely filled out before any worker has access to trench or excavation and returned to the INSPECTOR before the end of the first working day. The CONTRACTOR shall certify by this form the name of the competent person administering the Work, the soil classification, and the type of excavation protective system provided and/or installed.

H. The CONTRACTOR shall completely fence all excavations to provide protection against anyone falling into the excavation and to the satisfaction of the INSPECTOR. The fencing

shall be in place at all times except when workers are present and actual construction operations are in progress.

I. The CONTRACTOR shall comply fully with the requirements of the CAL/OSHA Construction Safety Orders, regarding the design of forms, false work, and shoring for concrete placement, and the inspection of same prior to placement of concrete. Where the Construction Safety Orders requires the services of a Civil or Structural Engineer registered in the State of California to approve design calculations and Working Drawings of the false work or shoring system, to inspect such system prior to placement of concrete, the CONTRACTOR shall employ such engineer for these purposes, and all costs therefore shall be included in the price named in the Contract for completion of the Work as set forth in the Contract Documents.

J. No Work under this Section shall start until the ENGINEER has accepted the plans and the CONTRACTOR has obtained all permits required and furnished a copy to the ENGINEER and the INSPECTOR.

1.2 THE REQUIREMENT

A. The CONTRACTOR shall have at the Worksite, copies, or suitable extracts of: Construction Safety Orders, Tunnel Safety Orders and General Industry Safety Orders issued by the State Division of Industrial Safety. The CONTRACTOR shall comply with provisions of these and all other applicable laws, ordinances, and regulations.

B. Before excavating any trench 1.5m (5 feet) or more in depth, the CONTRACTOR shall submit a detailed plan to the CITY showing the design of shoring, bracing, sloping, or other revisions to be made for the Workers' protection from the hazard of caving ground during the excavation of such trench. The plan and calculations shall be prepared by a California registered Civil or Structural ENGINEER. No excavation shall start until the ENGINEER has accepted the plan and the CONTRACTOR has obtained a permit from the State Division of Industrial Safety. A copy of the permit shall be submitted to the ENGINEER.

C. The INSPECTOR will provide a competent person trench/excavation certification form to the CONTRACTOR. It shall be completely filled out before any worker has access to trench or excavation and returned to the INSPECTOR before the end of the first working day. The CONTRACTOR shall certify by this form the name of the competent person administering the Work, the soil classification, and the type of excavation protective system provided and/or installed.

D. The CONTRACTOR shall completely fence all excavations to provide protection against anyone falling into the excavation and to the satisfaction of the INSPECTOR. The fencing shall be in place at all times except when workers are present and actual construction operations are in progress.

E. The fencing material shall be chain link fabric or welded wire fabric (6x6-W9xW9 minimum) and 1.5 m (5 feet) high, constructed according to one of the following:

1. Tensioned fencing material and have top and bottom tension wires securely fastened to driven steel posts or other equally rigid elements at a maximum spacing of 3.6m (12 feet); or
2. Untensioned fencing materials securely fastened to extended trench shoring elements at a maximum spacing of 2.4m (8 feet) and fastened to continuous top and bottom rails constructed of nominal 50mm x 100mm (2 in x 4 in) lumber or

equally rigid material. Framed panels with suitable supporting elements fastened together to form a continuous fence may also be used.

F. Payment for performing all Work necessary to provide safety measures shall be included in the prices bid for other items of work except where separate bid items for excavation safety are provided or required by law.

END OF SECTION

THIS PAGE INTENTIONALLY LEFT BLANK

SECTION 01581
PROJECT SIGNS

1.1 THE REQUIREMENT

A. The names, addresses and specialties of CONTRACTORS, Subcontractors, architects, or engineers may be displayed on removable signs. The size and location shall be subject to the ENGINEER'S approval. Commercial advertising matter shall not be attached to or painted on the surfaces of buildings, fences, canopies, or barricades.

B. TIME and INFORMATION CONSTRUCTION NOTICE SIGNS (2 each) per Standard Plan S-791-1 are required. The Inspector will determine appropriate location(s). The time for the TIME sign and the telephone number for the INFORMATION sign will be furnished by the ENGINEER at the time of construction.

C. 2 TYPE I CREDIT SIGNS per Standard Plan S-791-1 are required, and 1 TYPE IV BUILDING CREDIT SIGNS per Standard Plan S-792-0 is required. For TYPE IV credit sign, add LASAN call center phone number instead of Project Manager phone number. The INSPECTOR will determine the appropriate location(s). The information for the sign will be furnished by the ENGINEER at the time of construction.

D. (2 each) (C-18 and/or C-19) and (2 each) C-13 ADVANCE CONSTRUCTION NOTICE SIGNS per Standard Plan S-791-1 are required. The INSPECTOR will determine the appropriate locations.

E. This project requires the County Safe Clean Water program sign. The sign shall consist of the County Safe Clean Water program logo, to be furnished by the CONTRACTOR. The CONTRACTOR shall submit a shop drawing of the logo (s) for approval. The sign shall be at least 4' tall x 8' wide, mounted on two 4' x 4' posts.

END OF SECTION

THIS PAGE INTENTIONALLY LEFT BLANK

SECTION 01601
BUY CLEAN CALIFORNIA ACT

1.1 THE REQUIREMENT

A. For projects that include eligible materials as defined in this section, the CONTRACTOR shall provide current Environmental Product Declarations (EPDs) of eligible materials after project award and meet the State of California maximum limits for Global Warming Potential (GWP) as listed by the State's Department of General Services, if/when made available. Additional information regarding GWP limits may be found at the following website:
https://www.dgs.ca.gov/PD/Resources/Page-Content/Procurement-Division-Resources-List-Folder/Buy-Clean-California-Act

B. Eligible Materials:
   1. Materials/products Requiring Facility-Specific EPDs:
      a. Steel: This includes structural steel (hot-rolled sections, hollow structural sections, and plates) and carbon steel reinforcement used in concrete or masonry.
   2. Materials/products Requiring Industry-Average or Facility-Specific EPDs:
      a. Flat glass.
      b. Mineral wool board insulation.
      c. Concrete.

C. A submitted facility-specific or industry-average Environmental Product Declaration (EPD) must be a current Type III as defined by the International Organization for Standardization (ISO) Standard 14025, and has been 3rd Party verified following applicable Product Category Rules (PCRs). Credentials of 3rd Party showing them to be subject matter experts must be provided by the CONTRACTOR upon request. Minimum stage of coverage for EPDs shall consist of the production life cycle (i.e., product stage) or "cradle to gate". PCR shall be as identified by California Department of General Services for the Buy Clean California Act (BCCA). For concrete, PCR shall be ISO 21930: 2017.

D. The required EPDs shall be provided with the submittal of each eligible material used in this contract. See project-specific technical specifications, when applicable, for additional information. Depending on the number of facilities, and product types being proposed by the Contractor, more than one eligible material submittal of the same type may be required. Once approved, the CONTRACTOR must also provide a copy of the approved EPDs with the payment request to the INSPECTOR.

E. Restrictions:
   1. The CONTRACTOR shall not install any eligible materials or incorporate them into the work in any way until the associated submittal with the required EPDs have been provided and approved, unless otherwise agreed upon by the ENGINEER. Payment for specific eligible material will be withheld until the EPDs for these materials are approved by the ENGINEER and submitted along with the progress payment requests.
   2. The CONTRACTOR may be assessed liquidated damages for failure to complete the project within the time fixed by the terms of the contract resulting from Contractor delays associated with submission and approval of the required EPDs.

END OF SECTION

SECTION 01611
GUARANTY / WARRANTY

1.1 THE REQUIREMENT

A. The CONTRACTOR shall and does hereby warrant and guaranty that all work executed under this Contract will be free from defects of materials and workmanship for a period of one (1) year from the date of Final Field Acceptance of the project as evidenced by the issuance of a "Statement of Completion" by the Inspector, except for certain specific items of Work, materials and equipment requiring a guaranty or warranty for a greater period of time as may be required elsewhere in the Contract Documents. In the event, however, that portions of the Work are sufficiently complete to allow use or occupancy by the CITY in the manner and for the purposes intended prior to final completion and acceptance of the project, the guarantee period will commence on the date shown on the "Statement of Partial Completion."

B. The CONTRACTOR hereby agrees to indemnify and save harmless the CITY, and their officers, agents and employees against and from all claims and liability arising from damage and injury due to said defects. The CONTRACTOR shall repair or replace, at no cost to the CITY, any and all such defective Work and all other Work damaged thereby, which becomes defective during the term of the above-mentioned guaranties and warranties.

C. Within thirty (30) calendar days prior to completion of all Work, the CONTRACTOR shall submit to the CITY original copies of all manufacturers' product guaranties and warranties covering all supplied and installed equipment and, where applicable, systems.

D. In addition to the requirements of INSURANCE, Contract Bonds, of the GENERAL CONDITIONS, it shall be understood that the Surety for the faithful performance bond, submitted in conformance with the terms of the Contract for this project, is liable on its bond for all obligations of the CONTRACTOR including guaranty provisions. The "Performance Bond" shall remain in effect until the end of the guarantee period.

E. The CONTRACTOR shall, within twenty-four (24) hours of notice from the ENGINEER of any Work not in accordance with the requirements of the Contract, or any defects in the Work, commence and prosecute with due diligence all work necessary to fulfill the terms of this Section and to complete the Work within a period of time as approved by the ENGINEER. The CONTRACTOR shall notify the ENGINEER of the repair schedule before commencing the repairs and notify the ENGINEER to arrange for inspection. The CONTRACTOR shall submit a written report of the defect and methods of correction. In the event of failure by the CONTRACTOR and/or its Surety to respond to the notice or to complete the Work required by this Section within the time specified, the CITY shall proceed to have such Work done at the CONTRACTOR's expense. The CONTRACTOR or its Surety shall promptly reimburse the CITY all direct and indirect cost associated with performing this Work.

F. Repairs, replacements or changes made under the requirements of this Section shall be warranted for the specified guarantee period, but no less than one year, beginning on the date of acceptance of the repairs, replacements or changes.

END OF SECTION

THIS PAGE INTENTIONALLY LEFT BLANK

SECTION 01630
SUBSTITUTIONS AND "OR EQUAL" SUBMITTAL

1.1 THE REQUIREMENT

A. The CONTRACTOR may supply any of the materials specified or offer an equivalent. The ENGINEER shall determine whether the material offered is equivalent to that specified. The CONTRACTOR shall make all "Or Equal" submittals within thirty (30) calendar days after issuance of Notice to Proceed. Any request or submittal received after the specified period will be considered as NOT EQUAL to that so specified and will be processed as a substitution described hereinafter.

B. Whenever any particular material, process, or equipment is indicated by patent, proprietary or brand name, or by name of manufacturer, such wording is used for the purpose of facilitating its description and shall be deemed to be followed by the words 'or equal.' A listing of materials is not intended to be comprehensive, or in order of preference. The CONTRACTOR may offer any material, process, or equipment considered to be equivalent to that indicated. The substantiation of offers shall be submitted as provided in the Contract Documents.

C. The CONTRACTOR shall, at its expense, furnish data concerning items offered by it as equivalent to those specified. The CONTRACTOR shall have the material tested as required by the ENGINEER to determine that the quality, strength, physical, chemical, or other characteristics, including durability, finish, efficiency, dimensions, service, and suitability are such that the items will fulfill its intended function.

D. Test methods shall be subject to the approval of the ENGINEER. Test results shall be reported promptly to the ENGINEER, who will evaluate the results and determine if the substituted items are equivalent. The ENGINEER'S findings shall be final. Installation and use of substituted items shall not be made until approved by the ENGINEER.

E. All manufacturers' data submitted to the ENGINEER for review and acceptance shall clearly identify each proposed substitute with the corresponding Contract Drawing detail and Specification Section. If the ENGINEER decides to accept for use in the Project a material, process or article which is not the equal of that specified, substitution shall be made in the manner described in CHANGES AND EXTRA WORK of the GENERAL CONDITIONS, with a credit to the CITY for the difference in value.

F. The ENGINEER shall determine whether the material offered is equivalent to that specified. Any revision to structures, piping, mechanical, electrical, instrumentation, or any other work made necessary by such substitution must be approved by the ENGINEER, and the entire cost both direct and indirect of these revisions shall be borne by the CONTRACTOR.

G. Any materials, process, or article may be requested as a substitution by the CONTRACTOR, in lieu of that specified, under the following conditions:

1. Requests must be submitted in writing and in the manner described in SHOP DRAWINGS / SUBMITTALS of these GENERAL REQUIREMENTS.

2. Requests must be submitted thirty (30) calendar days prior to starting the work, as established by the ENGINEER, so as not to cause any delay in completion of the Project. No other request will be considered after expiration of the period

specified, except that in exceptional cases where it is determined to be in the best interest of the CITY, as approved by the ENGINEER.

3. The CONTRACTOR agrees to pay for all Engineering and design services, if required, to make all changes and adjustments in material and work of all trades directly or indirectly affected by the substitute, to the satisfaction of the ENGINEER, at no cost to the CITY.

4. All requests for substitution shall be made through the CONTRACTOR. Submissions by the CONTRACTOR shall imply the CONTRACTOR'S approval of such substitution.

5. No requests for substitutions will be considered during the bidding period.

6. The CONTRACTOR shall furnish adequate data with each request for approval of a substitute to enable the ENGINEER to evaluate the proposed substitution.

7. If a substitute offered by the CONTRACTOR is not found to be equal to the specified material, then CONTRACTOR shall furnish and install the specified material.

8. The specified Contract completion time shall not be affected by any circumstance developing from the provisions of this Section.

END OF SECTION

SECTION 01711
SITE INVESTIGATION

1.1 THE REQUIREMENT

A. CONTRACTOR shall investigate the Jobsite prior to Bid and during construction to ascertain all conditions affecting necessary procedures and sequencing of the Work operations in the execution of the Contracted Work in accordance with the requirements shown in Section 01731 – CUTTING AND PATCHING of the GENERAL REQUIREMENTS, herein and elsewhere.

1. Utilities in Abandoned Streets, Easements, and/or Alleys: CONTRACTOR is responsible for verifying and satisfying himself as to conditions under which work on such utilities will be done, such as what lines will be left in place, removed or rerouted. CONTRACTOR shall verify with Utility Map, Substructure Maps, District Maps & Street Lighting Map, etc., which are available at the Public Works Counter and in the Utility Companies. Should existing inactive utility lines (not shown or noted on the Drawings) be encountered, they shall be completely removed during excavating operations, or left-in-place and properly capped if not in way of new construction or if sufficiently below finish grade; as directed by the CITY ENGINEER. CONTRACTOR shall bear all costs involved in removing, rerouting or capping of such lines. CONTRACTOR shall contact the interested utility agencies as necessary to determine the Work operations involved.

2. CONTRACTOR shall report to the ENGINEER, prior to the Bid, any adverse condition(s), which would affect the proper execution of the Contracted Work and shall not proceed until instructed by the ENGINEER. Except as provided in GENERAL REQUIREMENTS Section 01253 – DIFFERING SITE CONDITION, failure to report any such conditions shall constitute acceptance of all site conditions, and any required removal, repair, or replacement caused by unsuitable conditions shall be performed by the CONTRACTOR at its sole cost and expense.

3. Start of Contracted Work at the Jobsite shall imply CONTRACTOR'S acceptance of job conditions.

B. Work Determination: CONTRACTOR shall satisfy itself regarding job/site conditions, the nature and types of work to be performed and shall be responsible for the determination of all classes of work to be accomplished at the Jobsite or at the manufacturer's plant.

C. Allotted Working Space: CONTRACTOR shall limit work operations to the "working site" or "Jobsite" or "Worksite," and areas immediately adjacent thereto, as shown on the Contract Drawings, specified, or authorized by the CITY ENGINEER.

1.2 UTILITY LOCATION

A. General:

1. The Permittee (in the case of Private Contracts) and the CITY (in the case of Cash or Assessment act contracts), will search known substructure records and furnish the CONTRACTOR with copies of documents which describe the location of utility substructures, or will indicate on the Plans for the Project those substructures (except for service connections) which may affect the Work.

Information regarding removal, relocation, abandonment, or installation of new utilities will be furnished to prospective Bidders.

2. Where underground main distribution conduits, such as water, gas, sewer, electric power, telephone, or cable televisions are shown on the Plans, the CONTRACTOR shall assume that every property parcel will be served by a service connection for each type of utility. If a water meter needs to be relocated, contact LADWP for its relocation. The CONTRACTOR shall be responsible to reconnect the new plumbing from the existing private service to the new meter location. All costs associated with the relocation shall be included in the CONTRACTOR'S bid for access pits. If the pit location is changed during construction, the CONTRACTOR shall be responsible for all associated costs.

3. As provided in Section 4216 of the California Government Code, at least two (2) working days prior to commencing any excavation, the CONTRACTOR shall contact the regional notification center (Underground Service Alert of Southern California) and obtain an inquiry identification number. Refer to PROTECTION OF PERSONS AND PROPERTY AND RESTORATION OF EXISTING IMPROVEMENTS of the GENERAL CONDITIONS.

4. The California Department of Transportation is not required by Section 4216 of the California Government Code to become a member of the regional notification center. The CONTRACTOR shall contact it for location of its subsurface installation.

5. The CONTRACTOR shall determine the location and depth of all utilities, including service connections, which have been marked by the respective owners and which may affect or be affected by its operations. If no pay item is provided in the Contract for this work, full compensation for such work shall be considered as included in the prices bid for other items of work.

B. Coordination:

1. The CONTRACTOR is advised that the Drawings usually depict the location of substructures as they existed when the project was designed. Present-day information may indicate that new facilities may have been added, or are going to be added, or that some of those substructures are now, or will be, relocated, abandoned, removed, lowered, raised, blanketed, encased, enlarged, protected, or altered in some other way. The CONTRACTOR shall carefully examine the proposed construction site prior to Bid and during construction for any evidence of recent surfacing of excavations, or the possible conflict with surface or aerial installations, and the latest substructure maps, and bid accordingly. If further information or clarification is desired, CONTRACTOR is urged to immediately contact the following:

   a. The appropriate utility companies;

   b. The appropriate District Office of the Bureau of Engineering; and/or

   c. City of Los Angeles, Utility Coordination Section of the Project Award and Control Division
   1149 S. Broadway, Suite 140,
   Los Angeles, CA 90015
   (213) 847-0624.

2. Review and verify with the information indicated on the Contract Drawings, the Summary of First Notice Replies (see Attachment No. 01711-A1) and the information provided in the GENERAL REQUIREMENTS Section 01112 - DESCRIPTION OF WORK.

1.3 UTILITY PROTECTION

A. The CONTRACTOR shall not interrupt the service function or disturb the support of any utility without authority from the owner or order from the CITY. All valves, switches, vaults, and meters shall be maintained readily accessible for emergency shutoff.

B. Where protection is required to ensure support of utilities located as shown on the Plans or in accordance with Subsection 1.2 – Utility Location, above, the CONTRACTOR shall, unless otherwise provided, furnish, and place the necessary protection at its expense.

C. Upon learning of the existence and location of any utility omitted from or shown incorrectly on the Plans, the CONTRACTOR shall immediately notify the ENGINEER in writing. When authorized by the ENGINEER, support or protection of the utility will be paid for as provided in SECTION 01254 – CHANGE ORDERS of the GENERAL REQUIREMENTS.

D. The CONTRACTOR shall immediately notify the ENGINEER and the utility owner if any utility is disturbed or damaged. The CONTRACTOR shall bear the costs of repair or replacement of any utility damaged if located as noted above, in Subsection 1.2 – Utility Location.

E. When placing concrete around or contiguous to any non-metallic utility installation, the CONTRACTOR shall, at its expense:

1. Furnish and install a 50mm (2 inch) cushion of expansion joint material or other similar resilient material; or

2. Provide a sleeve or other opening which will result in a 50mm (2 inch) minimum-clear annular space between the concrete and the utility; or

3. Provide other acceptable means to prevent embedment in or bonding to the concrete.

1.4 UTILITY REMOVAL

A. Unless otherwise specified, the CONTRACTOR shall remove all interfering portions of utilities shown on the Plans or indicated in the Bid documents as "abandoned" or "to be abandoned in place". Before starting removal operations, the CONTRACTOR shall ascertain from the CITY whether the abandonment is complete, and the costs involved in the removal and disposal shall be included in the Bid for the items of work necessitating such removals.

1.5 UTILITY RELOCATION

A. When feasible, the owners responsible for utilities within the area affected by the Work will complete their necessary installations, relocations, repairs, or replacements before commencement of work by the CONTRACTOR. When the Plans or Specifications indicate that a utility installation is to be relocated, altered, or constructed by others, the CITY will conduct all negotiations with the owners and work will be done at no cost to the CONTRACTOR, except as provided in SSPWC Section 301-1.6. Utilities which are relocated in order to avoid interference shall be protected in their position and the cost of such protection shall be included in the Bid for the items of Work necessitating such relocation.

B. After award of the Contract, portions of utilities which are found to interfere with the Work will be relocated, altered or reconstructed by the owners, or the ENGINEER may order changes to the Work to avoid interference. Such changes will be paid for in accordance with SECTION 01254 – CHANGE ORDERS of the GENERAL REQUIREMENTS. However, for interfering City owned utilities identified on the Plans including but not limited to sewers, storm-drains, traffic signal or streetlight conduits and appurtenances, their restoration, alteration, or reconstruction shall be performed by the CONTRACTOR and the associated cost shall be included in the CONTRACTOR's bid.

C. When the Plans or Specifications provide for the CONTRACTOR to alter, relocate, or reconstruct a utility, all costs for such work shall be included in the Bid for the items of work necessitating such work. Temporary or permanent relocation or alteration of utilities requested by the CONTRACTOR for its convenience shall be its responsibility and it shall make all arrangements and bear all costs.

D. The utility owner will relocate service connections as necessary within the limits of the Work or within temporary construction or slope easements. When directed by the ENGINEER, the CONTRACTOR shall arrange for the relocation of service connections as necessary between the meter and property line, or between a meter and the limits of temporary construction or slope easements. The relocation of such service connections will be paid for in accordance with the provisions of SECTION 01254 – CHANGE ORDERS of the GENERAL REQUIREMENTS. Payment will include the restoration of all existing improvements which may be affected thereby. The CONTRACTOR may agree with the owner of any utility to disconnect and reconnect interfering service connections. The CITY will not be involved in any such agreement.

1.6 UTILITY DELAYS

A. The CONTRACTOR shall notify the ENGINEER of its construction schedule insofar as it affects the protection, removal, or relocation of utilities. Said notification shall be included as part of the construction schedule required in SECTION 01321 - CONTRACTOR'S CONSTRUCTION SCHEDULE AND REPORTS OF THE GENERAL REQUIREMENTS. The CONTRACTOR shall notify ENGINEER in writing of any subsequent changes in the construction schedule which will affect the time available for protection, removal, or relocation of utilities.

B. The CONTRACTOR will not be entitled to damages or additional payment for delays attributable to the utility relocations or alterations if correctly located, noted, and completed in accordance with 1.2 Utility Location, above.

C. The CONTRACTOR may be given an extension of time for unforeseen delays attributable to the unreasonably protracted interference by utilities in performing Work correctly shown on the Plans.

D. The CITY will assume responsibility for the timely removal, relocation, or protection of existing main or trunkline utility facilities within the area affected by the Work if such utilities are not identified in the Contract Documents. The CONTRACTOR will not be assessed liquidated damages for any delay caused by failure of CITY to provide for the timely removal, relocation, or protection of such existing facilities.

E. If the CONTRACTOR sustains loss due to delays attributable to interferences, relocations, or alterations not covered by Subsection 1.2 - Utility Location, above, which could not have been avoided by the judicious handling of forces, equipment, or plant, there shall be paid to the CONTRACTOR such amounts as the ENGINEER may find to be fair and reasonable compensation for such part of the CONTRACTOR'S actual loss as was unavoidable and the CONTRACTOR may be granted an extension of time.

F. Payment to the CONTRACTOR for actual loss due to a protracted utility delay shall be calculated based on wage increases, price increases of material and equipment, additional insurance costs and actual direct costs of maintaining the Worksite incurred because of the utility delay.

1.7 UTILITY COOPERATION

A. When necessary, the CONTRACTOR shall so conduct its operations as to permit access to the Worksite and provide time for utility work to be accomplished during the progress of the Work.

END OF SECTION

THIS PAGE INTENTIONALLY LEFT BLANK

SECTION 01712
SUBSURFACE DATA

1.1 THE REQUIREMENT

A. All soil and test hole data, water table elevation, and soil analyses shown on the Drawings or included in the Specifications / Project Manual apply only at the location of the test holes and to the depth indicated. Test reports for test holes, which have been drilled, are available for inspection at the office of the ENGINEER or contained in the Geotechnical Report for the project. Any additional subsurface exploration shall be done by the CONTRACTOR at their own expense. The indicated elevation of the water table is that level at the date the test hole data was obtained. It is the CONTRACTOR'S responsibility to determine and allow for the elevation of groundwater at the date of Project construction. A difference in elevation between the ground water shown in soil boring logs and groundwater actually encountered during construction will not be considered as a basis for extra work.

END OF SECTION

THIS PAGE INTENTIONALLY LEFT BLANK

SECTION 01721
MOBILIZATION

1.1 THE REQUIREMENT

A. General:

Whether Mobilization is included as a Contract Bid Item in the Bid Proposal Form or specified as part of the lump sum in the Contract Documents, the cost of labor, equipment, materials and incidentals for doing all the work in mobilization (in advance of construction operations and not directly attributable to any specific bid item) shall be included in the Contract Price Breakdown and progress payment estimate. If there is no mobilization bid item, the CONTRACTOR shall submit to the INSPECTOR for approval the Contract Price Breakdown with the amount established for mobilization.

Mobilization shall include, but not be limited to, the following items, all as required for the proper performance and completion of the Work:

1. Obtaining all permits, licenses, insurance, and bonds. Providing copies to the ENGINEER.

2. Moving onto the Jobsite all of CONTRACTOR'S plant and equipment as required.

3. Erecting temporary buildings and other construction facilities.

4. Installing temporary construction power and wiring.

5. Establishing fire protection system for its temporary facilities.

6. Developing construction water supply.

7. Providing field office trailers for the CONTRACTOR, complete with all specified equipment, furnishings and utility services.

8. Providing sanitary facilities or connecting to onsite sanitary facilities as specified.

9. Providing for potable water facilities as specified. This includes a means by which all on site CONTRACTOR, Subcontractor or supplier personnel can wash their hands with soap.

10. Arranging for, and erection of, CONTRACTOR'S work and storage yards and sheds.

11. Submitting all required Subcontractor insurance certificates and bonds.

12. Posting all CAL/OSHA required notices and establishment of safety programs.

13. Having the CONTRACTOR'S representative at the Jobsite full time.

14. Furnishing of Construction Schedule, Contract Price Breakdown and Submittal Schedule.

15. Erecting all temporary fencing including removal and disposal of existing temporary fencing**.**

16. Erecting CONTRACTOR signs. The names, addresses, and specialties of CONTRACTORS, subcontractors, engineers or architects may be displayed on removable signs. The size and location shall be subject to the ENGINEER'S approval. Commercial advertising matter shall not be attached to or painted on the surfaces of buildings, fences, canopies or barricades.

17. Installing Building Credit signs and Advance Construction Notice signs. The Building Credit sign shall be submitted to the ENGINEER for approval prior to installation. Refer to GENERAL REQUIREMNETS Section 01581 - Project Signs, for additional requirements.

18. Providing an air-conditioned meeting room with a conference table, a minimum of 10 chairs and utilities for construction meetings within the CONTRACTOR'S field office.

19. Furnishing and set up of field office(s) for the ENGINEER and INSPECTOR. If it is necessary to relocate the INSPECTOR'S job office to a new facility or relocation during the course of the Contract provide the required labor and equipment. The new facility shall be properly equipped and conform to the requirements shown in Subsection B.2, Field Offices herein. The CONTRACTOR shall obtain the ENGINEER'S approval of the new location thirty (30) days in advance.

B. Field Offices For The Inspector and The Engineer:

1. Unless specified otherwise, the CONTRACTOR shall, at no cost to the CITY, furnish, install, maintain, and remove all temporary light, telephone, power and water (including piping, wiring, lamps and other equipment necessary for the field offices).

2. The CONTRACTOR shall furnish the ENGINEER and the INSPECTOR, for the duration of the contract**,** and through the STARTUP ASSISTANCE period, at no additional cost to the CITY, a furnished field office with janitorial services and maintenance agreements for all equipment provided under this Section. This office shall have a minimum floor space of 400 square feet, at least one door, and window area of not less than 6 square feet. All exterior doors and windows shall be provided with screens. All exterior doors shall be provided with door handles with double deadbolt locks and the CONTRACTOR shall provide the INSPECTOR two keys as requested by the INSPECTOR. This field office shall be furnished as follows:

   a. Two plan table(s), two standard 5-foot double pedestal desk with a drawer suitable for holding files, two chairs, two drafting stool, one plan rack, two - 4 drawer filing cabinet suitable to hold legal or letter size hanging file folders, two storage cabinet with a minimum of 4 adjustable shelves.

   b. Heating and air conditioning of sufficient capacity shall be provided at no expense to the CITY to adequately control the temperature at all times.

c. Bottled drinking water shall be provided within the office. Sanitary facilities shall be provided directly adjoining the office for the sole use of the ENGINEER and the INSPECTOR. Sanitary facilities shall include a toilet and wash basin with hot and cold running water.

d. Extended area, non-coin operated telephone service shall be provided within the office area. The installation shall include two individual telephone lines, two cordless telephones, one answering machines (one for each staff line), one facsimile machine for each Section.

e. Two cellular phones units and the services of an established commercial cellular phone service with minimum of 400 free minutes per month.

f. One console type, dry, indirect electrophotographic process network-capable copier/printer/scanner capable of 60 letter size copies per minute. Copier shall be able to copy 11" X 17" ledger size paper and be able to reduce to 65% and enlarge to 154%. Copier shall have a sorter/finisher with a staple cartridge and have additional cassettes for letter, legal, ledger-size paper. The copier's primary paper supply shall be 8.5" X 11" size. The copier shall be installed new or like new in good working order and the CONTRACTOR shall maintain the unit in operating condition throughout the life of the Project.

g. One Color inkjet all-in-one machine capable of printing, copying, and scanning up to 11" X 17". Printing shall be a minimum of 35 pages per minute in black and 28 pages per minute in color. Resolution shall be a minimum of 6000 x 1200 dpi. A 50-sheet document feeder shall be included. All toner cartridges shall be provided by the contractor for the duration of the project.

h. Duplex convenience outlets for electrical power a minimum of four per staff person.

i. Two Outdoor lighting fixture with 300-watt bulb to effectively light the area around the office facility.

j. Two Maintenance and service agreements for all office equipment during the contract period.

k. The CONTRACTOR shall provide janitorial services daily for the field offices for the duration of the Contract Work.

l. Any computer equipment or software furnished under this section or under an Allowance for City Field Offices shall be the property of the City at the end of the project.

m. The CONTRACTOR shall provide a high speed internet connection for the duration of the Contract and through the start up assistance period.

C. Temporary Construction Utilities:

1. Construction Water:

a. Potable water will be made available for the CONTRACTOR'S use from the existing fire hydrant system, as located on the Plans, or as directed by the ENGINEER. The CONTRACTOR shall meter water usage and pay for the cost of water consumption. The CONTRACTOR shall make arrangements with the servicing water utility company. A backflow preventer shall be provided as per the Plumbing Code.

2. Construction Power:

a. The CONTRACTOR shall provide all electrical power required in performance of the Work and shall pay all installation charges and monthly bills in connection therewith. The CONTRACTOR shall provide and maintain all temporary and permanent power. The CONTRACTOR shall pay for all permits. All temporary connections for electricity shall be subject to approval of the ENGINEER and the power company representative, and shall be removed in like manner at the CONTRACTOR'S expense prior to final acceptance of the Work.

3. Telephones:

a. The CONTRACTOR shall provide and maintain at all times during the progress of the Work, at its own expense, not less than three (3) telephones in good working order, at its own field construction office. Each such telephone shall be connected to an established exchange for toll service and with all other telephones utilized by the CONTRACTOR.

4. Temporary Ventilation:

a. The CONTRACTOR shall provide adequate means to furnish temporary ventilation within Work areas at CONTRACTOR'S own expense and conforming to applicable requirements and standards of Federal, State, County and the 2025 Los Angeles CITY Building Codes and Amendments.

D. Contractor's Temporary Storage Facilities:

1. The CONTRACTOR shall provide an adequate temporary shed on the site in a location designated by the ENGINEER for the safe storage of material and equipment. The shed shall be weathertight with a wood floor above grade. The shed shall be removed upon completion of the Work, or when so ordered by the ENGINEER.

E. Sanitary Facilities:

1. The CONTRACTOR shall provide adequate sanitary conveniences of an approved type for the use of persons employed on the Work, and properly secluded from public observation, shall be provided and maintained by the CONTRACTOR in such a manner and at such points as shall be required or

approved by the INSPECTOR. These conveniences shall be maintained at all times without nuisances and their use shall be strictly enforced. Upon completion of the Contracted Work, they shall be removed from the premises, leaving the premises clean and free from a nuisance.

F. Job Bulletin Board:

1. The CONTRACTOR shall provide and mount on the CONTRACTOR'S Field Office, where it can be readily seen by the CONTRACTOR'S employees, a substantially built 3-feet high x 4-feet wide bulletin board, with a framed glass door protected on the outside with a 2-inch x 2-inch galvanized mesh and lock.

G. Protection Enclosures:

1. Precautions shall be exercised by the CONTRACTOR at all times for the protection of persons and property.

2. CONTRACTOR shall furnish (or cause to be furnished) and maintain for the duration of Contracted Work, all scaffolds, covers, tarpaulins, canopies, warning signs, steps, bridges and other temporary construction and other protective devices as required by the INSPECTOR and the Local and State Rules, Ordinances and/or Regulations necessary for protection of public and private property and public safety.

3. Such enclosures shall be of reasonably good appearance and shall be maintained free of signs, posters, writing, markings and any other thing which would detract from a reasonably good appearance.

H. Temporary Fencing and Gates:

1. Provide and maintain for the duration of the Contracted Work temporary chain link fencing of design and type needed to prevent entry onto the Jobsite and exterior Work area by the public. Chain link fencing shall have green privacy screen.

2. Construction shall conform to the 2025 Los Angeles City Building Codes and Amendments where adjacent to any public way.

I. Plan Box:

1. CONTRACTOR shall provide a plan box to store a full set of contract drawings and the project manual for the duration of the project. The box shall be of the appropriate size to contain the contract drawings and the project manual, and shall be temporary, weather tight, and include a cover, lock, and proper identification.

J. Construction Sign:

1. Design: As indicated on the Contract Drawings.

2. Materials:

a. Posts: 4-inch x 6-inch redwood, C.R.A. Foundation grade.

b. Frame: Douglas fir solid stock, W.C.L.B., and Better, V.G. Finish.

c. Metal Panel: No. 22 gauge sheet steel.

d. CITY Seal: Provided by ENGINEER.

3. Fabrication:

a. Securely attach frame to posts with adequate fasteners.

b. Miter and nail frames, conceal fastenings and set nails.

c. Secure a sheet metal panel to frame with wood stops as indicated on the Contract Drawings.

4. Installation:

a. Set posts into natural ground; location as directed by the ENGINEER or where indicated on the Contract Drawings.

5. Removal:

a. Upon completion of Contracted Work or when directed by the ENGINEER.

7. Modifications:

a. During the course of the Contract, the CONTRACTOR may be required to make changes to lettering, as directed by the ENGINEER, up to forty (40) letters regardless of the letter size, without additional cost to the CITY.

b. Repair and recoat the modified area in a manner that will eliminate the evidence of the changes.

K. Permits:

1. The CONTRACTOR shall be responsible for obtaining and paying for all permits, licenses and fees in a timely manner, in accordance with Section 00217 of the General Conditions. The CONTRACTOR shall be aware of the expiration date of all building permits, plan checks and/or extensions when the ENGINEER turns over such documents to the CONTRACTOR for construction use. If the CONTRACTOR does not obtain the permits in a timely manner, the CONTRACTOR shall be responsible for the delay, and the additional cost incurred as a result of the delay, in obtaining and paying for the permits or licenses (such as costs to re-plan check, plan modification due to code changes, etc.).

2. The CONTRACTOR shall be familiar with all aspects of the Project. For the Project which requires a haul route hearing and haul route bonding as part of the Grading Permit approval process, CONTRACTOR shall prepare and secure the Grading Permit as soon as the construction contract is awarded in order to mitigate any possible delays due to the haul route hearing, The haul route map

preparations shall be as required by the Los Angeles CITY Department of Building and Safety, Grading Division, and Section 02220 – EARTHWORK of the Project Manual.

3. The CONTRACTOR shall obtain and pay for the following:

   a. Grading Permit.

   b. Storm Drain Connection Permit.

   c. Electrical Permit.

   d. Sign Permit.

   e. Sidewalk/Driveway - "A" Permit.

   f. Los Angeles County Department of Public Health Permit.

   g. Plumbing Permit.

   h. Demolition Permit.

   i. Los Angeles County Flood Control District.

   j. Shoring Permit.

   k. California General Construction Activity Stormwater Permit and Wet Weather Erosion Control Plan (WWECP) Stormwater Pollution Prevention Plant (SWPPP) for stormwater pollution control measures for construction activities.

   l. Los Angeles Department of Transportation Permit.

L. Utility Services Connections:

1. Within five (5) days after the Notice-to-Proceed, notify the serving utilities that the Project is under construction and furnish them dates on which the services will be required. Furnish the ENGINEER a duplicate copy of all service requests.

2. Should any major changes to the Work indicated be necessary to complete the utility installation, notify the ENGINEER in writing at once and cease all the Work affected until approval for the required modifications has been obtained from the ENGINEER.

3. Water Service Connections: Make all arrangements with the proper authorities for the domestic water service. The CONTRACTOR will pay for all fees and charges. Construction water is to be separately arranged and paid for by the CONTRACTOR. CONTRACTOR shall contact Los Angeles Department of Water and Power at (213) 367-2130 for new water service or 1-800-499-8840 to transfer an existing service. If the CONTRACTOR uses an existing water supply for construction the billing shall be transferred to the CONTRACTOR prior to the start of construction. A duplicate of the transfer documentation shall be provided to the ENGINEER.

4. Power Service Connections: Make all arrangements with the proper authorities for the new power service connections and testing of electrical equipment and control and removal of existing power service connections as part of the contract. See Electrical (E Sheets) for coordination. The CONTRACTOR will pay for all fees and charges. Power for construction and testing equipment to be separately arranged and paid for by the CONTRACTOR. The CONTRACTOR shall contact Los Angeles Department of Water and Power at 1-800-499-8840.

5. After all utility services are completed, all street improvements shall be repaired. CONTRACTOR shall include in the contract and pay for street damage restoration fee as indicated in Section 02710 - YARD WORK AND STREET WORK.

6. If the CONTRACTOR is delayed during the inspections by local authorized agencies or work by utility companies, not the fault of the CONTRACTOR and a critical path is impacted, the CONTRACTOR shall be entitled to a non-compensable time extension and shall have no claim for any other compensation for such delay.

M. Demobilization:

1. Removal of all Temporary Construction facilities described will be included as part of Mobilization.

END OF SECTION

(SEE ATTACHMENT)

ATTACHMENTS TO SECTION 01721

Attachments to General Requirements Section 01721 consists of one (1) document, as follows:

ATTACHMENT NUMBER	TITLE OF ATTACHMENT	NUMBER OF PAGES IN THIS ATTACHMENT
01721-A1	Construction Water Supply Schematic	1

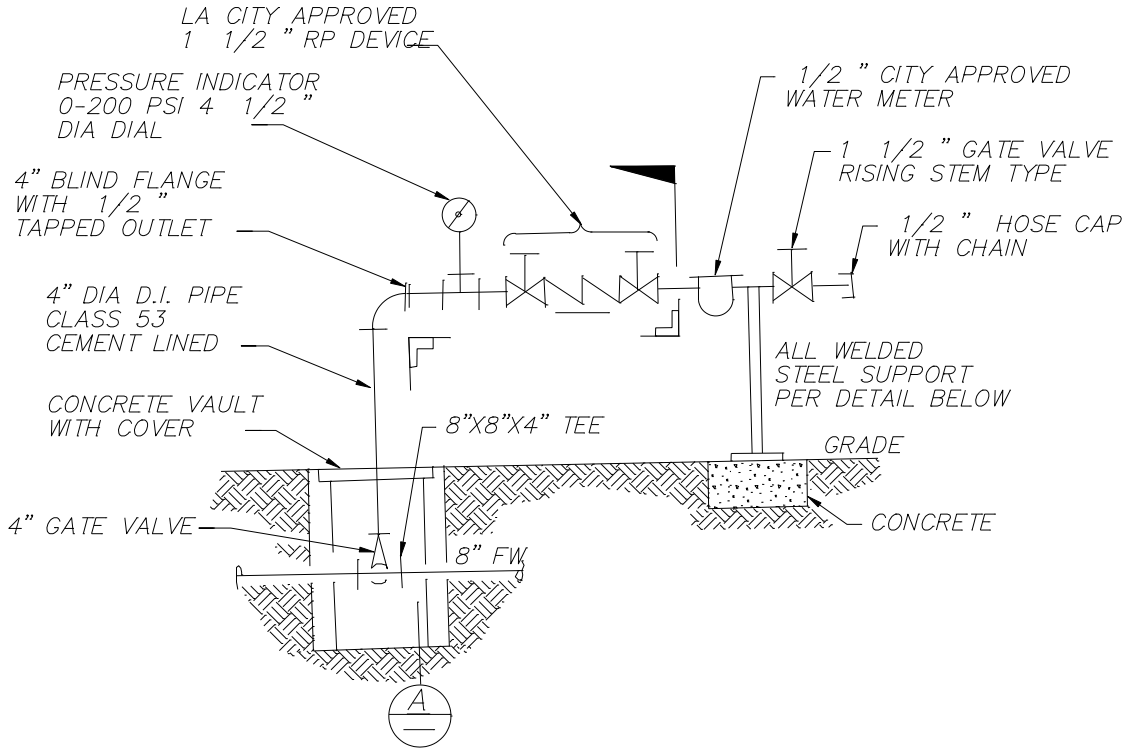

CONSTRUCTION WATER SUPPLY DETAIL
NTS

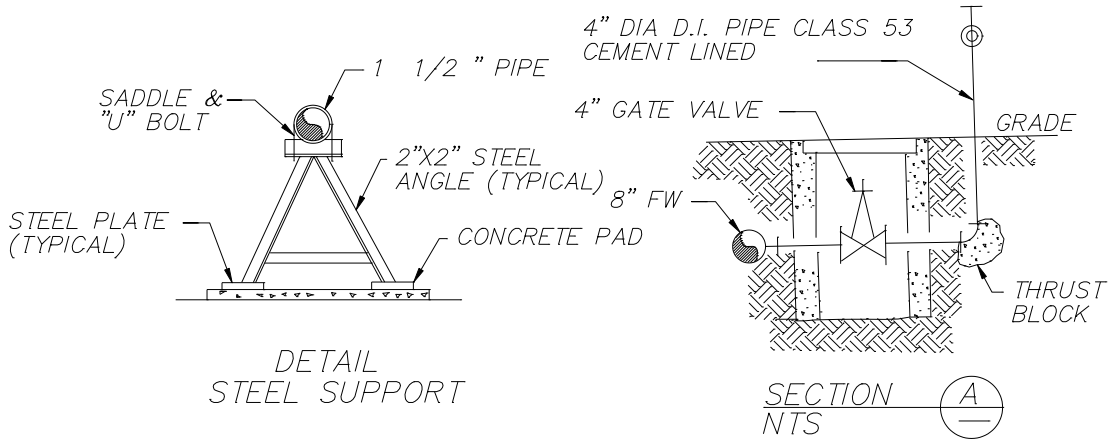

CONSTRUCTION WATER SUPPLY SCHEMATICS
NTS

SECTION 01722
SURVEYING

1.1 THE REQUIREMENT

A. Permanent Survey Control Network Markers:

1. The CITY Surveyor will establish horizontal and vertical control by recovering or reestablishing city centerline control monuments and identifying city benchmarks. The CONTRACTOR shall be responsible to protect all preconstruction control network reference points. In the case, where the monuments are to be removed or damaged by the CONTRACTOR, the CONTRACTOR shall notify the ENGINEER / CITY Surveyor in writing seven (7) calendar days before starting the Work. There will be a charge to the CONTRACTOR for replacing monuments and benchmarks that are disturbed by the CONTRACTOR prior to the CITY Surveyor establishing adequate reference points.

B. Staking Requests:

1. The CONTRACTOR shall complete a survey request form seven (7) full working days in advance by contacting the appropriate office in the following list. Additional lead time will facilitate services.

2. The form shall state exactly what and when the services are needed. Services such as painting removals, type of stakes, location, limits, offset directions and distance from stakes shall be indicated. The CONTRACTOR shall indicate the Project title, job work order number, Project address and telephone number(s) of the CONTRACTOR'S contact person. A copy of the request can be emailed to the Bureau of Engineering Survey Division at the following address: Eng.surdivisionwr@lacity.org and a copy shall be sent to the ENGINEER.

Valley District Survey Office (818) 374-4660
6262 Van Nuys Blvd. Suite 350
Van Nuys, CA 91401
Email Address: Eng.surdivisionwr@lacity.org

Central District Survey Office (213) 473-0608
555 Ramirez St, Space 250
Los Angeles, CA 90012
Email Address: Eng.surdivisionwr@lacity.org

3. The CONTRACTOR is responsible for protecting all survey stakes requested. There will be a fee for re-staking survey stakes lost due to neglect by the CONTRACTOR.

4. If applicable, the CONTRACTOR may pick up grade sheets at a location mutually agreed upon by the CONTRACTOR, ENGINEER, and CITY Surveyor.

5. If more than one survey is requested, the CONTRACTOR shall initiate all survey requests by priority number. Subcontractor's staking requests shall go through the CONTRACTOR.

6. The CITY Surveyor performing construction layout shall receive copies of all Change Orders, preliminary and final, plan clarifications, requests for information and shop Drawings affecting survey from the ENGINEER.

7. When survey services are required on CITY holidays or weekends, a written request must be sent to the CITY'S Principal Surveyor seven (7) full working days before such services are required, with one duplicate copy of the request given to the ENGINEER for approval.

Mr. Bill Knight, Principal Surveyor
Bureau of Engineering, Survey Division
201 N. Figueroa Street, Suite 1100
Los Angeles, CA 90012
William.knight@lacity.org

8. The CONTRACTOR shall perform and be responsible for the accurate layout of all portions of the Contracted Work and shall verify all dimensions on the Contract Drawings and shall report to the ENGINEER any discrepancies before proceeding with related Work.

9. All Work shall conform to the lines, elevations and grades shown on the Drawings.

10. Unless otherwise specified, stakes will be set and stationed by the CITY for curbs, headers, sewers, storm drains, structures and rough grade and a corresponding cut or fill to finished grades indicated on the grade sheets. Grades for underground conduits will be set at the surface of the ground. The CONTRACTOR shall transfer them to the bottom of the trench. The CONTRACTOR shall report any grade variation to the ENGINEER. The CONTRACTOR is not relieved of any responsibility for any error in the grade of the finished work.

C. Construction Survey Services:

1. The ENGINEER / CITY Surveyor shall establish horizontal and vertical control points for construction. The CONTRACTOR shall notify the ENGINEER / CITY Surveyor in writing at least seven (7) full working days before survey services are required in connection with the laying out of any portion of the work. The CONTRACTOR shall dig all holes necessary for line and grade stakes when requested by the ENGINEER.

2. The CONTRACTOR shall be responsible for their own layout based on the ENGINEER'S / CITY Surveyor survey stakes and grade sheets. The CONTRACTOR shall allow sufficient time for checking and issuance of grade sheets by the ENGINEER.

3. The ENGINEER / CITY Surveyor will be responsible for the accuracy of surveying adequate for construction. The CONTRACTOR shall preserve construction survey stakes and marks for the duration of their usefulness. If any construction survey stakes are lost or disturbed and need replacement, such replacement shall be by the ENGINEER / CITY Surveyor at the expense of the CONTRACTOR.

4. Unless otherwise specified, stakes will be set and stationed by the ENGINEER / CITY Surveyor for curbs, headers, sewers, storm drains, structures, and rough grade. A corresponding cut or fill to finished grade (or flowline) will be indicated on the grade sheet.

D. Line and Grade:

1. The ENGINEER / CITY Surveyor shall set alignment and grade stakes only for all outdoor pipelines that are eight inches (8") in diameter or larger. The CONTRACTOR shall furnish all other lines and grades required for proper execution of the work.

2. After exterior walls have been located, the CONTRACTOR shall be responsible for the location of all interior construction including interior piping.

3. All work shall conform to the lines, elevations, and grades shown on the Plans.

4. Three consecutive points set on the same slope shall be used together so that any variation from a straight grade can be detected. Any such variation shall be reported to the ENGINEER in writing. In the absence of such written notification, the CONTRACTOR shall be responsible for any error in the grade of the finished work.

5. Grades for underground conduits will be set at the surface of the ground. The CONTRACTOR shall be responsible for transferring the grades to the bottom of the trench.

1.2 THE REQUIREMENT

A. Permanent Survey Control Network Markers:

1. All Land Survey work within the City of Los Angeles shall be constrained to the CITY'S Horizontal and Vertical Control Networks. The horizontal control shall be based upon the CITY'S Centerline / Control Lines as noted in the CITY ENGINEER Field Books (C.E.F.B). In accordance with the California Business and Professions Code Section 8771 (b), City Municipal Code and Bureau of Engineering Land Development Standards, all survey monuments within or in near proximity to the project sites, are to be diligently searched for, recovered or re-established and preserved for the duration of the project. Survey monuments, whether horizontal control or benchmarks shall be preserved by the project's Licensed Land Surveyor or Professional Civil Engineer registered by the State of California to perform such work. Preconstruction and post-construction tie notes must be furnished to the Bureau of Engineering's Survey Division for review and approval. The tie notes shall note the character of the monuments recovered or re-established, all recovered centerline ties, method of establishment, measure to at least four centerline ties and centerline data / measure to survey monumentation at adjacent intersections. The vast majority of CITY survey monuments were originally established by the intersection of best fit alignments of the recovered original monumentation and lines of occupation that were captured by the CITY'S Survey Division shortly after the recordation of the original subdivisions (protraction). City survey monuments are to be established by retracing the survey lines run as shown on the CITY ENGINEER Field Books. CITY survey monuments may not be established solely by local evidence (local accessory ties) nor by Global Navigation Satellite System measure. The tie notes

shall be of such quality, form and completeness, and shall be on paper of such quality and size as may be necessary to conform to the standardized office records of the CITY ENGINEER. All such notes shall be indexed by the CITY ENGINEER as part of the permanent public records of his office. A post-construction set of tie notes shall be required to memorialize the resetting of any survey monuments (centerline survey monument or accessory curb ties) that has been destroyed during the construction process. The post-construction tie notes shall conform to the same standards and be processed in the same manner as the pre-construction tie notes.

B. Layout of Contracted Work:

1. The CONTRACTOR shall be responsible for all surveys required to layout the Work and for the accuracy of all survey work for construction. The CONTRACTOR shall include the cost of all such survey work in their Bid. The CONTRACTOR shall have all construction surveying performed by a `Licensed Land Surveyor' or a `Civil Engineer' registered by the State of California to perform such work. The ENGINEER reserves the right to verify all survey work done by the CONTRACTOR.

C. Construction Surveying Services:

1. Construction Surveys shall conform to Chapter J 600 of the Bureau of Engineering Survey Manual, Part J. This manual may be purchased through the Bureau of Engineering Public Reference Center.

2. The CONTRACTOR shall provide all reference stakes and form checks necessary for construction and inspection of improvements. All construction staking shall be documented in survey field notes. This staking may include but is not limited to: removals, joins, rough grade, slope, utilities, storm drains, sewers, curbs, walks, paving, wall and building stakes; and any other staking necessary for construction and inspection.

D. Reference or Grade Stakes:

1. A reference or grade stake shall be set for each grade change or angle point shown on the plan, standard plan, and shop drawing, in addition to the normal staking interval.

E. Form Checks:

1. Forms shall be checked when durable points may be disturbed, removed, or are impractical to be used to verify the design location. The measured location shall be recorded in the survey field notes. All variations from the plan location shall be brought to the attention of the ENGINEER.

F. Staking Intervals and Offset Stake Lines:

1. All staking intervals shall be in accordance with the Survey Manual, Figures J 615.224A&Am, J 615.225A, and J615.225Am. Stake lines shall be set at an offset distance from the improvement to ensure proper grade, station, and alignment.

G. Utility Stakes:

1. The CONTRACTOR shall provide stakes for all utilities, public or private, that require location or relocation, unless otherwise stated.

H. Additional Survey Work:

1. The CONTRACTOR may be required to furnish additional survey work, such as profiles, restakes, Change Orders, etc., at the request of the ENGINEER or the INSPECTOR.

I. Accuracy:

1. The CONTRACTOR shall use appropriate surveying methods to obtain the following standards: For fixed works (i.e., cast-in-place concrete; asphalt pavement, pipes and drains; and other items determined by the ENGINEER) the following survey standards shall be used. The absolute horizontal accuracy, in relationship to the Engineer's control, shall be such that the semimajor axis of its 95% error ellipse is ±0.015 foot or less. The absolute vertical accuracy, in relationship to the Engineer's control, shall be such that its standard deviation is ±0.015 foot or less. The relative horizontal accuracy of survey points within the Project shall be such that the semimajor axis of its 95% error ellipse is ±0.015 foot or less. The relative vertical accuracy of survey points within the Project shall be such that its standard deviation is ±0.015 foot or less.

2. For excavation purposes, the following survey standards shall be used. The absolute horizontal accuracy, in relationship to the Engineer's control, shall be such that the semimajor axis of its 95% error ellipse is ±0.1 foot or less. The absolute vertical accuracy, in relationship to the Engineer's control, shall be such that its standard deviation is ±0.1 foot or less. The relative horizontal accuracy of survey points within the Project shall be such that semimajor axis of the 95% error ellipse is ±0.1 foot or less. The relative vertical accuracy of survey points within the Project shall be such that its standard deviation is ±0.1 foot or less.

J. Survey/Inspector:

1. The CONTRACTOR shall provide to the INSPECTOR those measurements and control points necessary to determine the location and conformance to the plan, line, and grade of the improvements necessary for inspection purposes.

K. Survey/Engineer:

1. The CONTRACTOR shall provide to the ENGINEER those measurements necessary for the expedient completion of the Project.

L. Survey Plan of Operations:

1. Prior to construction, the CONTRACTOR shall submit to the ENGINEER for approval a survey plan describing methods and instrumentation to be used on the Project. The survey plan must be approved prior to any construction.

M. Survey Notes:

1. The CONTRACTOR shall supply and keep notes on CITY standard format note sheets in conformance with Chapter J 600 of the Bureau of Engineering Survey Manual, Part J. The ENGINEER may request copies of, and otherwise review, survey notes at any time during the construction phase of the Project. Upon completion of the Project, the original survey notes shall become the property of the CITY and shall be delivered to the ENGINEER.

END OF SECTION

SECTION 01723
RIGHT OF WAY

1.1 THE REQUIREMENT

A. The CONTRACTOR shall not allow its employees to use private property for any reason, or to use water or electricity from such property without written permission from the owner. The CONTRACTOR shall provide evidence of such permission, in writing, to the ENGINEER, before entering upon such lands.

END OF SECTION

THIS PAGE INTENTIONALLY LEFT BLANK

SECTION 1731
CUTTING AND PATCHING

PART ONE - GENERAL

1.1 SUMMARY

A. This Section establishes general requirements pertaining to cutting (including excavating,) coring, fitting, and patching of the Contracted Work in existing or new CITY facilities (structures) required to:

1. Make the several parts fit properly;

2. Uncover work to provide for removal, installing, inspecting, or both, of ill-timed work;

3. Remove and replace work not conforming to requirements of the Contract Documents; and

4. Remove and replace defective work.

B. Related Work:

1. Documents affecting Works of this Contract include, but are not necessarily limited to, the GENERAL CONDITIONS, DIVISION 1 - GENERAL REQUIREMENTS and other Sections of the Project Manual.

2. In addition to other specified requirements, the CONTRACTOR shall, upon the Consultant's or ENGINEER'S request, uncover work to provide for inspection by the Consultant or ENGINEER of uncovered work and remove samples of installed materials for testing.

3. Do not cut or alter Work performed under separate Contracts without the Consultant's or ENGINEER'S written permission.

4. Shoring in Section 02240.

5. High Density Polyethylene Geomembrane Liners in Section 02666.

6. Rough Carpentry in Section 06100.

7. Selective Demolition in Section 02220.

8. Caulking and Sealant in Section 07920.

9. Protective Coating in Section 09800.

10. Plumbing in Division 15.

11. Mechanical in Division 15.

12. Electrical in Division 16.

1.2 SUBMITTALS

A. Request For Consultant's or ENGINEER'S Consent:

1. Prior to cutting which effects structural safety, submit written request to the Consultant or ENGINEER for permission to proceed with cutting.

2. Submit, to the ENGINEER, for approval, the method(s) of cutting and patching, and protection plan for each. Submit structural calculation, prepared by a California State licensed Engineer, as directed by the ENGINEER.

3. Submit all Shop Drawings or submittals as required by other Sections of the Project Manual.

4. Should conditions of the Work or schedule indicate a required change of materials or methods for cutting and patching, so notify the Consultant or ENGINEER and secure written permission prior to proceeding.

1.3 QUALITY ASSURANCE

A. Use adequate numbers of skilled workers who are thoroughly trained and experienced in the necessary crafts, and who are completely familiar with the specified requirements and the methods needed for proper performance of the Work of this Section.

B. The safety provisions of applicable laws, building and construction codes shall be observed.

C. Existing wall or ceiling may contain lead-containing materials indicated to be encapsulated or remain. All workers shall be protected from lead exposure using engineering and work practice control when performing other renovation, remodeling or cleaning activities in accordance with all local and other governing agencies, regulations and requirements.

D. Field Mock Up: For each finish surface condition prepare a representative mock-up area which shall be completely cleaned and finished for review by ENGINEER. ENGINEER'S approval shall be obtained before proceeding with additional cutting and patching work.

E. Requirements for Structural Work: Do not cut and patch structural elements in a manner that would reduce their load-carrying capacity.

1. Obtain approval of the cutting and patching proposal before cutting and patching any structural elements.

B. Operational and Safety Limitations: Do not cut and patch operating elements or safety related components in a manner that would result in reducing their capacity to perform as intended, or result in increased maintenance, or decreased operational life or safety.

1. Obtain approval of the cutting and patching proposal before cutting and patching any operating elements.

F. If no deposition of existing detail of existing improvements or conditions is made on the Drawings or in the Project Manual, it shall be the CONTRACTOR'S responsibilities to

provide necessary site investigations including testing, potholes, exposure, etc. to obtain site information at no additional cost to the CITY. CONTRACTOR shall submit site information as part of the submittal. CONTRACTOR shall repair all potholes, exposures, etc. as part of the Contract.

G. Visual Requirements: Do not cut and patch construction exposed on the exterior or in occupied spaces, in a manner that would, in the ENGINEER'S or Consultant's opinion, reduce the building's aesthetic qualities, or result in visual evidence of cutting and patching. Remove and replace work cut and patched in a visually unsatisfactory manner.

PART TWO - PRODUCTS

2.1 MATERIALS

A. General: Use materials that are identical to existing materials. If identical materials are not available, or existing materials do not meet codes or cannot be used where exposed surfaces are involved, use materials that match existing adjacent surfaces to the fullest extent possible with regard to visual effect. Use materials whose installed performance will equal or surpass that of existing materials. Submit method of repair including lapping, splicing and joining of new and existing materials.

B. For replacement of items removed, use materials complying with pertinent Sections this Project Manual.

C. All cut concrete shall be provided with steel dowels filled with non-shrink grout prior to patching or placement of new concrete.

PART THREE - EXECUTION

3.1 SURFACE CONDITIONS

A. Inspection:

1. Inspect existing conditions, including elements subject to movement or damage prior to the Bid, during cutting, excavating, patching, and backfilling.

2. Identify all existing utilities, protect and maintain service to occupied areas in accordance with GENERAL REQUIREMENTS Section 01140 –- CONTRACTOR'S USE OF THE PREMISES, and GENERAL REQUIREMENTS Section 01711 – SITE INVESTIGATION.

3. Obtain required shear tests for existing concrete materials.

4. Obtain required weldability test on existing steel.

5. Unless specified otherwise, inspect and determine location of existing rebars in masonry and/or concrete walls or flooring prior to cutting.

6. After uncovering the work, inspect conditions affecting installation of new work.

B. Discrepancies:

1. If uncovered conditions are not as anticipated, immediately notify in writing the Consultant or the ENGINEER and secure needed directions.

2. Do not proceed until unsatisfactory conditions are corrected.

3.2 PREPARATION PRIOR TO CUTTING

Provide required protection including, but not necessarily limited to, shoring, bracing, and support to maintain structural integrity of the work. Provide duplicate copy of shoring permit and plan to the ENGINEER prior to start of Contracted Work.

3.3 PERFORMANCE

A. Perform required excavating and backfilling as required under other pertinent Sections of the Project Manual.

1. Perform cutting and demolition by methods, which will prevent damage to other portions of the Contracted Work and provide proper surfaces to receive a proper installation of repair and new work.

2. Perform cutting (excavating) in accordance with recommendations described in Soil Investigation Report. Over cutting (excavating) is prohibited.

3. Perform fitting and adjusting of products to provide finished installation complying with the specified tolerances and finishes noted in the Technical Sections of the Project Manual.

B. Cutting: Cut existing construction using methods least likely to damage elements to be retained or adjoining construction. Where possible, review proposed procedures with the original installer. If CONTRACTOR does not concur with the original installer's recommendations, CONTRACTOR shall notify the ENGINEER and request instructions.

1. In general, where cutting is required, use hand or small power tools designed for sawing or grinding, not hammering and chopping. Impact tools are not to be used in the building. Cut holes and slots neatly to size required with minimum disturbance of adjacent surfaces. Temporarily cover openings when not in use.

2. To avoid marring existing finished surfaces, cut or drill from the exposed or finished side into concealed surfaces, or spaces.

3. Cut through concrete and masonry using a cutting machine such as a carborundum saw or diamond core drill. Use methods or locations that could avoid cutting the rebars. All cut rebars, approved by the ENGINEER, shall be rounded off any sharp edges and dabbed with a coat of protective coating against rusting.

4. Comply with requirements of applicable Sections of DIVISION 2 where cutting and patching requires excavating and backfilling.

5. By-pass utility services such as pipe or conduit, before cutting, where services are shown or required to be removed, relocated or abandoned. Cut-off pipe or conduit in walls, partitions or floor slabs to be removed. Cap, valve or plug and seal the remaining portion of pipe or conduit to prevent entrance of moisture or other foreign

matter after bypassing and cutting. No existing service shall be interrupted, in accordance with Section 01140 – CONTRACTOR'S USE OF THE PREMISES of the GENERAL REQUIREMENTS.

6. Unless specified otherwise, all cut floor or roof wooden ledgers and blockings shall be repaired, spliced and installed with approved steel connectors. If necessary, install new double wooden ledgers or blocking without additional cost to the CITY.

7. Unless specified otherwise, all cut ceiling framing members shall be repaired or replaced with new framing members to the satisfaction of the ENGINEER. Re-install all ceiling, mechanical grills, and lighting fixtures affected by the cutting and repairs.

8. Unless specified otherwise, all existing masonry walls shall be removed to the nearest grout joint. All removed masonry units shall be protected, salvaged and reused.

C. Patching: Patch with durable seams that are as invisible as possible. Comply with specified tolerances.

1. Where feasible, inspect and test patched areas to demonstrate integrity of the installation.

2. Restore exposed finishes of patched areas and extend finish restoration into retained adjoining construction in a manner that will eliminate evidence of patching and refinishing.

3. All existing masonry wall shall be repointed and regrouted to the nearest wythe joint to match existing.

4. Restore all building insulation and fireproofing to match existing thickness and conditions.

5. Restore complete caulking, sealer, waterproofing etc. to achieve maximum performance as required at no additional cost to the CITY.

3.4 CLEANING

A. Thoroughly clean areas and spaces where cutting and patching is performed or used as access. Remove completely paint, mortar, oils, putty and items of similar nature. Thoroughly clean piping, conduit and similar features before painting or other finishing is applied. Restore damaged pipe covering to its original condition.

3.5 TESTING

A. Demonstrate by appropriate water testing that repaired caulking, sealer, waterproofing, etc. are completely water tight and weather tight.

B. Arrange with local authorized agencies and test all existing utility services, mechanical and plumbing systems, fire and life systems affected by the cutting and patching.

END OF SECTION

THIS PAGE INTENTIONALLY LEFT BLANK

SECTION 01740
REMOVAL, CLEANUP, AND DEMOBILIZATION

1.1 THE REQUIREMENT

A. Upon completion of the Contracted Work, the CONTRACTOR shall remove all of its tools, materials, and other articles from the property of the CITY. Should the CONTRACTOR fail to take prompt action to this end, the CITY, at its option and without waiver of such other rights as it may have, upon thirty (30) calendar days notice, may treat such items as abandoned property. The CONTRACTOR shall also sweep all floors broom clean, clean all exterior and interior surfaces and windows and remove all rubbish and debris resulting from the Contracted Work and shall maintain the Jobsite in a clean, orderly and safe condition at all times until completion of the physical Work and written Notice of Partial Acceptance. Failure to comply with this requirement shall be grounds for the CITY to assess clean-up costs in the amount of five percent (5%) of the mobilization cost.

END OF SECTION

THIS PAGE INTENTIONALLY LEFT BLANK

SECTION 01750
STARTUP ASSISTANCE

1.1 THE REQUIREMENT

A. To satisfy the requirements of the ENGINEER during the startup of the facility, the CONTRACTOR may be required to provide STARTUP ASSISTANCE. Startup assistance shall commence immediately after a Statement Of Partial Completion or a Statement Of Completion is issued as specified in PARTIAL ACCEPTANCE and FINAL ACCEPTANCE of the GENERAL CONDITIONS and shall continue for a period of three (3) months. Such services shall include the services of craft personnel supplied by the CONTRACTOR to satisfy the requirements of the ENGINEER during Startup. Such services shall be available for at least one (1) eight (8) hour shift per day until startup activities are concluded, and may also include the availability of said craft personnel on a twenty-four (24) hour on-call basis.

B. Such startup assistance shall include such modifications to the Work as deemed necessary by the ENGINEER to provide a complete and functional facility.

C. Commencing on the first day of startup assistance, and upon written notice by the ENGINEER, the CONTRACTOR shall provide the INSPECTOR with daily labor timesheets, material invoices, and rented equipment invoices required for startup assistance activities.

D. Direct costs of startup assistance activities shall be in strict accordance with the Cost Reimbursement (Time and Materials) portions of the GENERAL REQUIREMENTS Section 01254, CHANGE ORDERS. However, Part 1.1.E, MARKUPS – OVERHEAD AND PROFIT, shall not be applicable to the direct costs of startup assistance. Instead, provisions for overhead and profit applied to the direct costs of startup assistance are included below:

DIRECT COST PERFORMED IN ONE MONTH	% OVERHEAD[2] AND PROFIT WHEN PRIME CONTRACTOR PERFORMS WORK	% OVERHEAD[2] & PROFIT PAID TO PRIME CONTRACTOR FOR WORK DONE BY ITS SUBCONTRACTORS[1]
Under $20,000	24%	11%
$20,000 - $50,000	22%	9%
$50,000 - $100,000	20%	7%
Over $100,000	18%	5%

[1] Subcontractors will mark up their direct costs for startup assistance in accordance with the SSPWC available at the time of the Bid. Subcontractors at all tiers shall not be paid overhead and profit on their Subcontractor's work.

[2] Overhead for CONTRACTOR or Subcontractor shall consist of the following, but is not limited to:

1. Home office overhead expenses.

2. All insurance requirements.

3. Other needed insurance.

4. Field office overhead including, but not limited to:

    a. Bookkeeping, accounting, estimating (whether done at the field or home office);

    b. Photocopying and/or office automation (whether done at the field or home office);

    c. Salaried superintendent or any other person with superintendent duties during the course of the Work;

    d. Any salaried staff and/or temporary office services;

    e. Trailers, electricity, water, telephone, etc.;

    f. Vehicles assigned to any salaried staff and/or temporary office services;

    g. Small tools and consumables. Small tools are defined as any equipment or tool, which has a replacement value of $1,000 or less;

    h. Travel of home office or field office staff, including transportation and expenses.

G. All items included in overhead shall not be billed as direct costs. The derivation of an extended overhead (field and/or office) rate and its application to contract time extensions shall not be applicable to startup assistance activities for this Contract. The duration of startup assistance will not be considered in the determination of the completion date for liquidated damages. That date will be determined by the completion of other work. Likewise, the duration of startup assistance will not be the basis in whole or in part for any claims for delay or extended overhead.

H. Each month the amount billed by the CONTRACTOR for startup assistance will be deducted from the amount stipulated in the SCHEDULE OF WORK AND PRICES of Bid Proposal. In the event that the stipulated amount is exhausted, the CITY will continue to approve payment via Change Orders. The cost of these Change Orders will be calculated in the manner described hereinbefore in this Article. In the event that the stipulated amount is not exhausted when the startup activities are concluded, the balance of the stipulated amount will not be due the CONTRACTOR and a deductive Change Order will be issued for the remaining balance.

END OF SECTION

SECTION 01770
PROJECT CLOSEOUT

PART ONE - GENERAL

1.1 THE REQUIREMENT

A. Closeout Timetable:

The CONTRACTOR shall establish dates for equipment testing and acceptance periods (as required under the Contract). Such dates shall be established not less than seven (7) calendar days prior to beginning any of the foregoing items, to allow the CITY, the ENGINEER, and their authorized representatives sufficient time to schedule attendance at such activities.

B. Final Submittals:

The CONTRACTOR, prior to requesting Final Payment, shall obtain and submit the following items to the ENGINEER.

1. Written guarantees, where required.

2. Technical manuals and instructions.

3. Keying schedule.

4. Maintenance stock items; spare parts; special tools.

5. Completed record drawings.

6. Certificates of inspection and acceptance by local governing agencies having jurisdiction.

7. Los Angeles department of Building and Safety (LADBS) Plan Check Set and LADBS Building Card following LADBS final inspection approval, as applicable.

8. Releases from all parties who are entitled to claims against the subject Project, property, or improvement pursuant to the provisions of law.

C. Final Cleanup:

1. The CONTRACTOR shall perform all tasks specified in REMOVAL, CLEANUP, AND DEMOBILIZATION of the GENERAL REQUIREMENTS.

D. Maintenance And Guarantee:

1. The CONTRACTOR shall make all repairs and replacements promptly upon receipt of the written order from the ENGINEER. If the CONTRACTOR fails to make such repairs or replacements promptly, the ENGINEER reserves the right to do the work and the CONTRACTOR, and his surety shall be liable to the CITY for the cost thereof.

2. Replacement of earth fill or backfill, where it has settled below the required finish elevations, shall be considered as a part of such required repair work, and any

repair or resurfacing constructed by the CONTRACTOR which becomes necessary by reason of such settlement shall likewise be considered as a part of such required repair work.

E. Bond:

1. The CONTRACTOR shall provide a bond to guarantee performance of the provisions contained in NON-CONFORMING WORK and INSURANCE (Paragraph K) of the GENERAL CONDITIONS, GUARANTY / WARRANTY of these GENERAL REQUIREMENTS, and Paragraph 1.1 D of this Section.

1.2 RELATED DOCUMENTS

A. Drawings and General Provisions of Contract, including GENERAL CONDITIONS, DIVISION 1 - GENERAL REQUIREMENTS and other Sections of the Project Manual, applies to this Section.

1. SHOP DRAWINGS / SUBMITTALS in Section 01330.

2. Section 01140 – CONTRACTOR'S USE OF THE PREMISES.

3. Mobilization in Section 01721.

4. REMOVAL, CLEAN-UP, AND DEMOBILIZATION in Section 01740.

5. RECORD DRAWINGS AND RECORD PROJECT MANUAL in Section 01783.

1.3 SUMMARY

A. This Section specifies administrative and procedural requirements for a Project Closeout, including but not limited to:

1. Inspection procedures.

2. Project record document submittals.

3. Operation and Maintenance Manual submittal.

4. Submittal of warranties.

5. Final cleaning.

B. Closeout requirements for specific construction activities are included in the appropriate Technical Sections in Divisions 2 through 16 of the Project Manual.

1.4 FINAL INSPECTION

A. Preliminary Procedures: Before requesting final inspection for the Contracted Works, the CONTRACTOR shall complete the following.

1. In the "Request for Payment" that coincides with, or first follows, the date the final inspection is requested, show one hundred percent (100%) completion for the portion of the Contracted Work claimed as complete. Include supporting

documentation for completion as indicated in these Contract Documents and a statement showing an accounting of changes to the Contract Sum.

a. Include a list of incomplete or outstanding works established during a Pre-final walk-thru as required in Section 01452 - INSPECTION OF THE WORK of the GENERAL REQUIREMENTS, and all supporting evidence or documentation for completion.

b. If one hundred percent (100%) completions cannot be shown, include a list of incomplete items and all correction notices, the value of incomplete construction, and reasons as to why the Work is not complete.

2. Advise CITY of pending insurance changeover requirements.

3. Submit specific warranties, reduced faithful performance bonds for guarantee work, maintenance agreements, final certifications, and similar documents.

4. Obtain and submit releases from local authorized agencies enabling the CITY unrestricted use of the Work and access to services and utilities; include the certificate of occupancy, permits or operating certificates and similar releases. Return all Building & Safety's sign-off sheet and Inspection Records to the CITY.

5. Submit Record Drawings and Record Project Manual, maintenance manuals, final Project photographs, damage or settlement survey, property survey, and similar final record information.

6. Deliver tools, spare parts, extra stock, and similar items.

7. Make a final changeover of permanent locks and transmit keys to the ENGINEER. Advise the CITY'S personnel of the changeover in security provisions.

8. Complete start-up testing of systems, and instruction**/**training of the CITY'S operating and maintenance personnel. Discontinue or change over and remove temporary facilities from the Jobsite, along with construction tools, mockups, and similar elements.

9. Complete all required testing including balancing test, bacteriological analysis, etc. Submit all test reports.

10. Return all original permits and manifests to the ENGINEER.

11. Advise the CITY of pending change over of the utility services upon start-up testing of the systems and completion of final inspection.

12. Complete final clean up requirements, including touch-up painting. Touch-up and otherwise repair and restore marred exposed finishes.

13. Make ready to proceed with landscape establishment period. Submit the maintenance schedules and logs.

B. Inspection Procedures: The INSPECTOR, with cooperation from the Consultant and the ENGINEER, will prepare a Final Inspection Correction list to that effect following inspection, or advise the CONTRACTOR of construction that must be completed or

corrected before the construction work can be considered complete. The Contract time shall continue to be assessed.

1. The INSPECTOR, Consultant and ENGINEER will repeat the inspection when requested and assured that the Contracted Work has been satisfactorily completed.

2. The INSPECTOR, Consultant and ENGINEER will inspect the Work of the landscape maintenance service upon completion.

3. Results of the completed inspection will form the basis of requirements for Final Acceptance. The Contract time shall stop when all corrections are considered complete by the CITY.

C. Reinspection Fees: Should the Consultant and the CITY'S personnel perform reinspection due to failure of the Work to comply with CONTRACTOR'S claim of completion, the CONTRACTOR will compensate the CITY for such additional services. The CITY will deduct the amount of such compensation from the Final Payment to the CONTRACTOR.

1.5 FINAL ACCEPTANCE

A. Preliminary Procedures: Before requesting Final Acceptance and Final Payment, the CONTRACTOR shall complete the following and list exceptions in the request.

1. Submit the Final Payment request with releases and supporting documentation not previously submitted and accepted. Include certificates of guarantee for products and completed operations where required.

2. Submit an updated final statement, accounting for final additional changes to the Contract Sum.

3. Submit a certified copy of the INSPECTOR'S (combined with Consultant's and ENGINEER'S) final inspection list of items to be completed or corrected, stating that each item has been completed or otherwise resolved for acceptance, and the list has been endorsed and dated by the INSPECTOR, the Consultant or ENGINEER.

4. Submit a certified copy of the INSPECTOR'S, Consultant's and ENGINEER'S final inspection correction list for the maintenance services and items to be completed or corrected.

5. Submit final meter readings for utilities, a measured record of stored fuel, and similar data as of the date of Final Acceptance, or when the CITY took possession of and responsibility for corresponding elements of the Work.

6. Submit consent of surety to Final Payment.

7. Submit a final liquidated damages settlement statement.

8. Submit evidence of final, continuing insurance coverage complying with insurance requirements.

9. Submit all required certified weekly payroll records, ethnic composition of work force reports.

B. Reinspection Procedure: The INSPECTOR**,** Consultant and ENGINEER will reinspect the Contracted Work upon receipt of notice that the Work, including inspection list items from earlier inspections, has been completed, except items whose completion has been delayed because of circumstances acceptable to the INSPECTOR**,** Consultant or ENGINEER.

1. After all correction works are completed and inspected, ENGINEER and INSPECTOR of Bureau of Contract Administration shall establish the construction completion date.

1.6 RECORD DOCUMENTS SUBMITTALS

A. General: Do not use Record Documents for construction purposes; protect from deterioration and loss in a secure, fire-resistive location; provide access to record documents for the Consultant's or ENGINEER'S reference during normal working hours.

B. Record Drawings: Maintain a clean, undamaged set of blue or black line white prints of Contract Drawings and Shop Drawings. Mark the set to show the actual installation where the installation varies substantially from the Contracted Work as originally shown. Mark whichever drawing is most capable of showing conditions fully and accurately; where Shop Drawings are used, record a cross-reference at the corresponding location on the Contract Drawings. All Record Drawings, Record Project Manual and new markings shall be submitted to the ENGINEER for review prior to the approval of the Progress Payments. Give particular attention to concealed elements that would be difficult to measure and record at a later date. Upon completion of the Work, submit Record Drawings, Record Project Manual etc., to the Consultant or ENGINEER for review and for the CITY'S records.

1. Mark Record Sets with a red erasable pencil; use other colors to distinguish between variations in separate categories of the Work.

2. Mark new information that is important to the CITY, including detail from "Request-for-Information" which was not shown on Contract Drawings or Shop Drawings, as soon as it is made available**.** Any subsequent revision or changes, to the details from an earlier "Request-for-Information", shall also be marked immediately on the Record Drawings.

3. Note related finalized or pending "Change Order" numbers where applicable**.**

4. Note all addenda, drawing modification, etc. on Record Drawings.

5. Where Shop Drawings are used for actual performance of the Contract Work and are most capable of showing actual details, conditions, and dimensions fully and accurately, record all the Shop Drawings and place them in good order with the Record Drawings. Properly identified and bound of field, and ready for continued use and reference.

6. Organize Record Drawing sheets into manageable sets, bind with durable paper cover sheets, and print suitable titles, dates and other identification on the cover of each set.

C. Record Project Manual: Maintain one complete copy of the Project Manual, including addenda, and one copy of other written construction documents such as "Change Orders" and modifications issued in printed form during construction. Mark these documents to show the variations in actual Contracted Work performed in comparison with the text of the Project Manual and modifications. Give particular attention to substitutions, selection of options and similar information on elements that are concealed or cannot otherwise be readily discerned later by direct observation. Note related Record Drawing information and Product Data.

1. Upon completion of the Work, submit record Project Manual to the Consultant or ENGINEER for review and for the CITY'S record.

D. Record Schedule: Provide one (1) copy of memory stick or other portable device containing the Construction Schedule. Record this document to show the actual schedules and sequences the actual Works were performed in comparison with Baseline Construction Schedule approval in accordance with GENERAL REQUIREMENTS Section 01321 – CONTRACTOR'S CONSTRUCTION SCHEDULE AND REPORTS.

E. Record Product Data: Maintain one (1) copy of each Product Data submittal. Mark these documents to show significant variations in actual Work performed in comparison with information submitted. Include variations in products delivered to the site, and from the manufacturer's installation instructions and recommendations. Give particular attention to concealed products and portions of the Work, which cannot otherwise be readily discerned later by direct observation. Note related Change Orders and markup of Record Drawings and Project Manual.

1. Upon completion of a markup, submit a complete set of Record Product Data to the Consultant or ENGINEER for review and for the CITY'S records.

F. Record Sample Submitted: Immediately prior to the date or dates of Substantial Completion, the CONTRACTOR will meet at the Jobsite with the Consultant or ENGINEER and the CITY'S personnel to determine which of the submitted Samples that have been maintained during progress of the Work are to be transmitted to the CITY for record purposes. Comply with delivery to the CITY'S Sample storage area.

G. Miscellaneous Record Submittals: Refer to other Sections of the Project Manual for requirements of miscellaneous record-keeping and submittals in connection with actual performance of the Contract Work. Submit to the Consultant or the ENGINEER miscellaneous records for the CITY'S records.

H. Maintenance Manuals: Organize operating and maintenance data into suitable sets of manageable size. Bind properly indexed data in individual heavy-duty 2-inch, 3-ring vinyl-covered binders, with pocket folders for folded sheet information. Mark appropriate identification on front and spine of each binder. Include the following types of information:

1. Emergency instructions.

2. Spare parts list with model/part numbers.

3. Copies of work permits and warranties.

4. Wiring diagrams.

5. Recommended "turn around" cycles.

6. Inspection procedures; Operation and Maintenance Instructions.

7. Shop Drawings and Product Data.

8. Small scale of "Record" Drawings of such operating equipment.

9. Fixture lamping schedules.

PART TWO - PRODUCTS (NOT APPLICABLE)

PART THREE - EXECUTION

3.1 CLOSEOUT PROCEDURES

A. Operation and Maintenance Instructions: Unless specified otherwise, in addition to the maintenance manuals described hereinabove, arrange for each installer of equipment that requires regular maintenance to meet with the CITY'S personnel to provide instruction in proper operation and maintenance. If installers are not experienced in procedures, provide instruction by manufacturer's representatives. Include a detailed review of the following items:

1. Maintenance Manuals.

2. Permit and Record Documents.

3. Spare parts and materials.

4. Tools.

5. Lubricants.

6. Fuels.

7. Identification systems.

8. Control sequences.

9. Hazards.

10. Cleaning.

11. Warranties and bonds.

12. Maintenance agreements and similar continuing commitments.

B. As Part of Instruction for Operating Equipment, Demonstrate the Following Procedures:

1. Start-up.

2. Shutdown.

3. Emergency operations.

4. Noise and vibration adjustments.

5. Safety procedures.

6. Economy and efficiency adjustments.

7. Effective energy utilization.

3.2 FINAL CLEANING

A. General: General cleaning during construction is required by the GENERAL CONDITIONS and GENERAL REQUIREMENTS.

B. Cleaning: Employ experienced workers or professional cleaners for final cleaning. Clean each surface or unit to the condition expected in a normal, commercial building cleaning and maintenance program. Comply with manufacturer's instructions.

1. Complete the following cleaning operations before requesting inspection prior to CITY'S acceptance of Contracted Work.

a. Remove labels that are not permanent labels.

b. Clean transparent materials, including mirrors and glass in doors and windows. Remove glazing compound and other substances that are noticeable vision-obscuring materials. Replace chipped or broken glass and other damaged transparent materials at no added cost to the CITY.

c. Clean exposed exterior and interior hard-surfaced finishes to a dust-free condition, free of stains, films and similar foreign substances. Restore reflective surfaces to their original reflective condition. Leave concrete floors broom clean. Vacuum carpeted surfaces.

d. Wipe surfaces of mechanical and electrical equipment. Remove excess lubrication and other substances. Clean plumbing fixtures to a sanitary condition. Clean light fixtures and lamps.

e. Clean the site, including landscape development areas of rubbish, litter and other foreign substances. Sweep paved areas broom clean; remove stains, spills and other foreign deposits. Rake grounds that are neither paved nor planted, to a smooth even-textures surface.

f. Remove all temporary detour stripping by the wet sandblasting method.

C. Pest Control: Engage an experienced exterminator to make a final inspection, and rid the Project of rodents, insects and other pests.

D. Removal of Protection: Remove temporary protection and facilities installed for protection of the Contracted Work during construction.

E. Compliance: Comply with regulations of authorities having jurisdiction and safety standards for cleaning. Do not burn waste materials. Do not bury debris or excess materials on the CITY'S property. Do not discharge volatile, harmful or dangerous materials into drainage systems. Remove waste materials from the site and dispose of in a lawful manner.

1. Where extra materials of value remaining after completions of associated Work have become the CITY'S property, arrange for disposition of these materials as directed.

END OF SECTION

THIS PAGE INTENTIONALLY LEFT BLANK

SECTION 01781
SPARE PARTS

1.1 THE REQUIREMENT

A. General:

1. The Spare Parts supplier must be the manufacturer or a factory authorized representative of the manufacturer. The manufacturer will be responsible for any default of the representative that is not corrected by the representative in a timely and efficient manner. This responsibility includes replacing incorrect or defective parts, trouble shooting, and correcting problems that are traceable to the manufacturer's parts. The supplier shall provide, along with the Spare Parts List, a formal letter of certification from the manufacturer that the supplier is an authorized representative of the manufacturer.

2. The supplier shall be a stocking facility of the manufacturer of the proposed parts, or the manufacturer must maintain a stocking facility of these parts on the West Coast, or the supplier can guarantee delivery of spare parts within seventy-two (72) hours.

3. Spare Parts should be supplied in the manufacturer's original packaging and shall be new and unused. A statement shall be included to clearly indicate that the Spare Parts are new and unused.

4. The Spare Parts list shall be in addition to any other lists required under any other sections of these Specifications. This list shall include but is not limited to the following:

   a. Current prices including delivery to the Jobsite.

   b. Original Equipment Manufacturer (OEM) part numbers, which identify interchangeability.

   c. Make and type of equipment as well as Model number.

   d. Size.

   e. Supplier's address and telephone number.

   f. Letter of certification from the manufacturer.

   g. Materials.

   h. Special tools.

   i. Estimated delivery lead times.

   j. Warranty: State terms of warranty of spare parts offered.

   k. Cross-sectional, exploded view or assembly-type drawing with part numbers.

   l. Manufacturer's price list catalog.

m. Applicable trade discount (for budget purposes)

5. Delivery of all required Spare Parts shall be a condition precedent to receipt of Partial Completion or a Statement of Completion.

6. The CONTRACTOR shall be responsible for proper storage and protection of the Spare Parts until delivered to the CITY.

7. To ensure proper tracking of the Spare Parts the CONTRACTOR shall fill out and submit required information, on the forms provided by the ENGINEER, to the INSPECTOR with the delivery of Spare Parts. The CONTRACTOR'S cost of preparing and submitting the Spare Parts List(s), procuring, and inspection of the Spare Parts shall be included in the CONTRACTOR'S lump sum bid, and therefore, no overhead or profit shall be added to the cost of the Spare Parts.

B. Required Spare Parts:

1. The Required Spare Parts lists shall be included with the equipment submittal to the ENGINEER.

2. The CONTRACTOR shall include in the Bid the cost of providing the Required Spare Parts described under individual equipment Specifications.

C. Recommended Spare Parts:

1. The CONTRACTOR shall submit with each equipment submittal a list from the manufacturer of the Recommended Spare Parts adequate to ensure two (2) continuous years of normal operation after expiration of the equipment warranty. The cost of preparing and submitting the Spare Parts List(s) shall be included in the CONTRACTOR'S lump sum bid.

2. The Recommended Spare Parts List(s) shall include items requiring replacement under the following conditions:

a. Wear, corrosion, or erosion during normal operation.

b. Failure which causes a shutdown of equipment or systems.

c. Damage or breakage during routine maintenance or inspections of equipment.

d. Custom or specially fabricated parts, and

e. Long lead items.

3. If an allowance for RECOMMENDED SPARE PARTS has been included as a bid item in the SCHEDULE OF WORK AND PRICES in Vol. 1 of the Proposal, the CONTRACTOR shall procure such Recommended Spare Parts as directed by the ENGINEER. The ENGINEER will compile, from the CONTRACTOR'S submittal, a list identifying which recommended Spare Parts are approved for purchase. The CITY will pay, from the RECOMMENDED SPARE PARTS allowance, the vendor-invoiced prices plus delivery cost only, without markup for overhead or profit. If the total cost differs from the amount set forth in the

SCHEDULE OF WORK AND PRICES, the Contract Price shall be adjusted by a Change Order for the difference as an additional amount due the CONTRACTOR, or a credit to the CITY, as appropriate.

4. Approval of the individual equipment submittal does not constitute authorization to procure the Recommended Spare Parts.

D. Prices charged to the CITY are based on a percentage discount from the manufacturer's published price list(s) shall not be subject to change for a period of sixty (60) calendar days after bid opening. If prices on the price list(s) are raised, the CITY reserves the right to accept the raise or to cancel such items from the contract. The CITY is to be given benefit of any decline in prices immediately upon the manufacturer's effective date of such decline. Changes in price list(s) shall be effective on the date of the manufacturer's effective date of change. Increase in prices shall not be retroactive.

END OF SECTION

THIS PAGE INTENTIONALLY LEFT BLANK

SECTION 01782
TECHNICAL MANUALS

1.1 THE REQUIREMENT

A. Definitions:

1. EMPAC: EMPAC is an acronym for Enterprise Maintenance Planning and Control. This is the system used for the identification and maintenance management of all pumping plant equipment. This EMPAC number is typically the equipment identification number used in the Contract Documents.

2. Connective Wiring Diagrams: Connective Wiring Diagrams are electrical diagrams that show how an equipment or instrumentation item is to be connected to the Plant or equipment system electrical power system or instrumentation system.

3. Internal Wiring Diagrams: Internal Wiring Diagrams are electrical diagrams that show how an equipment or instrumentation item is internally electrically connected.

4. Maintenance Summary Forms: The Maintenance Summary Forms are a series of forms including the Equipment Maintenance Summary Form (MSF), Mechanical Component MSF, Electrical Component MSF, Instrumentation Component MSF, and Valve Gate Component MSF. These forms are used to summarize the identification, nameplate data, maintenance requirements, recommended lubricants, and recommended spare parts for the various equipment and instrumentation. (See Attachments 01782-A1 through 01782-A4.)

B. Technical Manuals:

1. Unless otherwise specified, Technical Manuals shall, as a minimum, include the following:

a. Table of Contents.

b. Itemized list of all data provided.

c. Consistent tabulation or indexing method within each technical manual and when compiling technical manual into the final Operations & Maintenance (O&M) Manual.

d. Manufacturer, supplier, spare parts and servicing location information including name, address, phone number of the manufacturer and local representative.

e. Approved Shop Drawing Submittal information applicable to O&M, including operating curves, manufacturer's recommended tolerances and clearances, and approved fabrication drawings.

f. Recommended installation, adjustment, start-up, calibration and troubleshooting procedures.

g. Lubrication recommendation and yearly quantity requirements.

h. Recommended step-by-step procedures for all modes of operation including start-up, operation, shutdown, load changes, and emergency shutdown. Manufacturer's literature shall be included.

i. Complete internal and connection wiring diagrams. Circuit diagrams and schematics shall be down to component level.

j. Recommended preventive maintenance and maintenance procedures, including lubrication and calibration schedules.

k. Complete parts list, by generic title and identification number, with exploded views and schematics of each assembly.

l. Complete programming procedures and ladder logic documentation for all computer controlled programmable logic controllers and automated equipment.

m. Electrical, instrumentation, control system and piping schematics.

n. Recommended spare parts list and list of special tools and equipment required for O&M.

o. Disassembly, overhaul, reassembly, realignment and testing instructions.

p. Complete equipment O&M Manuals.

q. All contents of the technical manual shall be suitable for compilation into a standard size, three-ring binder.

r. Approved isometric drawings of piping systems.

C. Additional requirements are contained in individual Divisions of the Technical Specifications (i.e., Division 16: ELECTRICAL, Division 17: INSTRUMENTATION AND CONTROL, etc.). The CONTRACTOR shall be responsible for reviewing all said reference requirements and including them in the Bid price. In the event of a conflict, the requirements of the individual Technical Specifications shall prevail. Repetition of requirements in two or more specification references shall not be cause for CONTRACTOR claim of conflict.

D. The CONTRACTOR shall submit two (2) copies of all Technical Manuals to the ENGINEER for review at least sixty (60) calendar days prior to the use of any new equipment. The ENGINEER will review and return 1 copies of each submittal within thirty (30) calendar days following their receipt by the ENGINEER. The CONTRACTOR shall make all revisions and additions and resubmit to the ENGINEER 2 copies of the corrected Technical Manuals prior to seventy-five percent (75%) completion of the Contract Amount.

E. The ENGINEER will review the corrected Technical Manuals within twenty-one (21) calendar days following their receipt by the ENGINEER. The CONTRACTOR shall then compile all of the corrected Technical Manuals into a single O&M Manual, which shall be arranged according to a Table of Contents, provided by the ENGINEER.

F. The CONTRACTOR shall furnish to the ENGINEER four (4) hard copies and one (1) electronic, searchable Portable Document Format (PDF) copy of the final O&M Manual. Each hard copy manual shall consist of one or more volumes, each of which shall be bound, in a standard size, three-ring, loose-leaf, vinyl plastic hard cover binder, suitable for bookshelf storage. Binder ring size shall not exceed two-and-one-half inches (2.5 inches). All reprints shall be done on margin-reinforced papers. The searchable PDF copy shall be an exact duplicate of the hard copy of the final O&M Manual and be submitted on media approved by the ENGINEER. All submittal materials shall be in English. The final O&M Manual shall be submitted to the ENGINEER prior to eighty-five percent (85%) completion of the Contract Amount as measured by Monthly Progress Payments. Submittal of the Technical Manuals, the Corrected Technical Manuals and/or the O&M Manuals within the specified time frame, as detailed above, shall be a condition precedent to the making of the monthly payments.

G. If TECHNICAL MANUALS have been stipulated as a separate bid item in the SCHEDULE OF WORK AND PRICES in the Bid Proposal, the CONTRACTOR shall be entitled to receive Progress Payments upon submittal and approval of the Technical Manuals. This bid item is not an allowance but is a fixed amount and the CONTRACTOR is not entitled to receive additional compensation for technical manuals. The CONTRACTOR shall be entitled to receive fifty percent (50%) of the bid breakdown amount upon approval of all required draft Technical Manuals by the ENGINEER. Partial submittal of the required Technical Manuals shall not entitle the CONTRACTOR to any payment of this amount. The CONTRACTOR is entitled to receive one hundred percent (100%) of the bid breakdown amount at the time the ENGINEER gives full approval to all Technical Manuals. Partial approval, or approval of some of the Technical Manuals, shall not entitle the CONTRACTOR to any payment. Failure to list TECHNICAL MANUALS as a separate bid item in the SCHEDULE OF WORK AND PRICES does not relieve the CONTRACTOR from preparing the Technical Manuals and including all associated costs in the Bid.

END OF SECTION

(SEE ATTACHMENTS)

ATTACHMENTS TO SECTION 01782

Attachments to General Requirements Section 01782 consists of four (4) documents, as follows:

ATTACHMENT NUMBER	TITLE OF ATTACHMENT	NUMBER OF PAGES IN THIS ATTACHMENT
01782-A1	Equipment Summary Data Forms Information Sheet	1
01782-A2	Equipment Summary Data Form	1
01782-A3	Information Sheet for Equipment Maintenance Summary Form	1
01782-A4	Typical Maintenance Summary Form	1

EQUIPMENT SUMMARY DATA FORMS
INFORMATION SHEET

Equipment Summary Data Forms are intended to provide the Maintenance Department with sufficient information to catalogue newly purchased equipment items installed at the facility. This information is used for inventory purposes as well as for equipment performance tracking purposes. Each item of equipment installed at the facility must be documented on one of three Forms; Electrical Summary Data Form, Equipment (Mechanical, HVAC, etc.) Summary Data Form, and/or Pump Summary Data Form. Examples of each form are attached. Additional requirements regarding submittal format, quantities, etc., are found elsewhere in this Specification.

1. Equipment item (included industry-accepted nomenclature).

2. CITY Equipment Identification Number (EMPAC)

3. Manufacturer
Address **Phone/Fax Numbers**

4. Supplier (if different than (3))
Address **Phone/Fax Numbers**

5. Equipment Serial Number(s)

6. Equipment Model Number

7. Size

8. Capacity

9. Rated Output

10. Drive Motor Data (as appropriate).

In addition, information specific to the item described shall be provided as indicated on the example Forms.

EQUIPMENT SUMMARY
DATA FORM

EQUIPMENT ITEM: _____

EQUIPMENT COST: _____

EQUIPMENT SUPPLIER: _____

_____

COMPONENT INFORMATION: **NAMEPLATE DATE: MANUFACTURER:**	
CITY IDENTIFICATION NUMBER:	**EQUIPMENT SERIAL NUMBER:**
EQUIPMENT MODEL DESIGNATION:	**TYPE:**
SIZE:	**RATED OUTPUT:**
CAPACITY:	**SERVICE:**
COMPONENT INFORMATION: DRIVE MOTOR DATA **MANUFACTURER:**	
SERIAL NO.:	**HORSEPOWER:**
MODEL:	**FRAME:**
TYPE:	**VOLTAGE:**
DUTY (Pump Only):	**SEAL TYPE (Pumps Only):**
ENCLOSURE:	**AMPERAGE:**
PHASE: HERTZ:	**SERVICE FACTOR:**
LUBRICATION REQUIREMENTS: MOTOR	
COMMENTS:	

INFORMATION SHEET FOR
EQUIPMENT MAINTENANCE SUMMARY FORMS

Equipment Maintenance Summary forms are intended to provide the Maintenance Division with information sufficient to properly diagnose (troubleshoot, repair, check-out, and return an item of equipment to service. Standard information contained in each Form shall be as follows:

In addition, Maintenance information required to troubleshoot, repair, and return electrical/electronic equipment to service (including set point, derivatives, etc.) Shall be included as required. The Maintenance Summary Form attached in intended to serve as a (minimum) guide to the information required per item of equipment. Additional requirements regarding submittal format, quantities, etc. are found elsewhere in this Specification.

1. **Equipment Item (include industry-accepted nomenclature)**

2. **CITY Equipment Identification Number (EMPAC)**

3. **Manufacturer**
   Address Phone/Fax Numbers

4. **Equipment Serial Number(s)**

5. **Weight of Individual Components (over 100 pounds)**

6. **Nameplate Date (including voltage, horsepower, lubrication requirements, speed, etc.)**

7. **Manufacturer's Local Representative**
   Address Phone/Fax Numbers

8. **Maintenance Operation(s) Required. Listing shall include (1) Maintenance Operation to be performed. (2) frequency of said Maintenance Operation based on actual service conditions of installed equipment (i.e., type of duty, environmental factors). Reference shall be made to the appropriate section of the manufacturer's technical literature.**

9. **Lubricant List. List shall include a primary and two secondary manufacturer-approved lubricants.**

10. **Spare Parts required for a minimum of one (1) year of equipment operation based on anticipated actual service conditions. Also to be included in the name, address, and phone number of the recommended source of spare parts if different than (7) above.**

ATTACHMENT ____
Typical Maintenance Summary Form

NOTE: SUPPLEMENTARY INFORMATION, AS APPROPRIATE, SHALL BE INCLUDED

1. EQUIPMENT ITEM: _____

2. CITY EQUIPMENT IDENTIFICATION NUMBER (EMPAC): _____

3. MANUFACTURER:_____
   ADDRESS:_____
   TELEPHONE NO.:_____ FAX NO.:_____

4. EQUIPMENT SERIAL/IDENTIFICATION NUMBERS: _____

5. WEIGHT OF INDIVIDUAL COMPONENTS (OVER 100 POUNDS):_____

6. NAMEPLATE DATA:_____

7. MANUFACTURER'S LOCAL REPRESENTATIVE:_____
   ADDRESS:_____
   TELEPHONE NO.: _____
   FAX NO.: _____

8. MAINTENANCE OPERATION(S) REQUIRED: (attach separate sheet if required).

OPERATION	FREQUENCY	COMMENTS

9. LUBRICANT LIST. Provide Reference symbol used in items recommended.

SHELL	STANDARD OIL	GULF	ARCO	EQUAL

10. RECOMMENDED SPARE PARTS LISTS FOR MINIMUM OF ONE (1) YEAR UNINTERRUPTED SERVICE. (Attach separate sheet if required).

ITEM	PART NO.	QUANTITY REQUIRED (per unit)	UNIT COST	COMMENTS

SECTION 01783
PROJECT RECORD DOCUMENTS

1.1 THE REQUIREMENT

A. Project Record Documents comprised of Record Drawings (As-Built, full size Project Plans) and Record Project Manual that are developed during construction to delineate the actual in-place constructed conditions shall be provided by the CONTRACTOR to the ENGINEER. Requirements for Record Drawings and Record Project Manual as specified elsewhere, shall supplement the requirements specified herein.

B. Record Drawings and Record Project Manual shall include all changes in the As-Bid Plans including those issued as Change Orders, Plan Clarifications, Addenda, Notice to Bidders, responses to Requests for Information, Jobsite Memos, and any additional details needed for the construction of the Project, but not shown on the As-Bid Plans. Any substructures encountered while excavating that are left in place shall be located by survey to the satisfaction of the ENGINEER shown, identified and recorded on the Record Drawings. All substructures including, but not limited to, concrete structures, electrical conduit, and duct banks, drains and sanitary sewer pipelines, process piping, water lines, and similar substructures, whose installed location differs from that shown on the As-Bid Plans, shall be precisely located by survey to the satisfaction of the ENGINEER shown, identified and recorded on the Record Drawings before backfilling.

C. The CONTRACTOR shall prepare Record Drawings and Record Project Manual. The Record Drawings and Record Project Manual shall be kept by the CONTRACTOR, and updated during construction.

D. Where the Plans are diagrammatic or lacking precise details, the CONTRACTOR shall produce dimensioned full-size sheets as the Record Drawings. Installations outside of structures shall be located by coordinates and elevations. Where substructures are encased in concrete, the outside dimensions of the encasement shall also be given.

E. In the case of those Drawings which depict the detail requirements for equipment to be assembled and wired in the factory, the Record Drawings shall be updated by indicating those portions which are superseded by final Shop Drawings and by including appropriate reference information describing the Shop Drawings by manufacturer, drawing and revision numbers.

F. Record Documents, particularly the Record Drawings and Record Project Manual, shall include a copy of all changes including those issued as Change Orders, Plan Clarifications, Addenda, Notice to Bidders, responses to Requests for Information (RFI's), Jobsite Memos, and any additional details needed for the construction of the Project, but not shown on the Contract Drawings or included in the Project Manual. When possible, attach these copies to the back of the corresponding full size plan sheet or attached stacked to front of sheet.

G. Record Drawings shall be produced and submitted in two (2) different formats as listed below for review and approval by the ENGINEER:

1. Marked Record Drawings: These Record Drawings shall be As-Bid Plans marked with red ink on one (1) set of full-size prints. Record Drawings in red marking format shall be available for the ENGINEER'S review at all times during construction.

2. Computer Aided Drafting (CAD) Record Drawings: These Record Drawings shall be produced in electronic CAD format based on the software and version used to prepare the As-Bid Plans. identify AutoCAD and/or Micro station software(s) and version(s) used for each drawing discipline. In general, pre-2016 civil drawings were prepared using Micro Station by Bentley while newer civil drawings and all other discipline drawings were prepared using AutoCAD by Auto Desk. The ENGINEER will provide As-Bid Plans in CAD format for the CONTRACTOR to develop the project Record Drawings. Additional drawings that may be required to indicate record conditions shall be prepared in similar CAD format as well. All additions to As-Bid Plans shall employ drafting standards which are consistent with those used in the As-Bid Plans and per the City of Los Angeles CAD Standards found at the following link: http://eng2.lacity.org/techdocs/CADSTDS/cad_details.htm. Production of Record Drawings in CAD format shall start no later than at 75% of work completion.

    a) CAD Record Drawings shall be fully revised versions of the As-Bid Plans. Simply marked and clouded CAD Drawings are not acceptable.

    b) Each revised item shall be noted with an upside-down numbered triangle, and the triangle's source shall be described in the sheet border.

    c) For bidding purposes, the CONTRACTOR shall assume 10 (ten) additional new highly detailed sheets will need to be created to accommodate changes.

    d) CONTRACTOR's CAD technician preparing the CAD Record Drawings shall have minimum ten (10) years of experience and proficient in preparing Micro Station and AutoCAD drawings.

    e) The CONTRACTOR shall submit the CAD Record Drawings on a DVD or Flash Drive.

3. The CONTRACTOR and their CAD technician(s) shall arrange meetings with each of the City's project designers for all disciplines involved, to discuss and plan for the first CAD Record Drawing submittal. Meeting shall be scheduled 45 days prior to when the submittal is first due.

4. The ENGINEER will review and approve the Marked and CAD Record Drawings prior to submittal of all Monthly Payment Requests. If, in the opinion of the ENGINEER, the Record Drawings are not current, approval of the Monthly Payment may be withheld until the Record Drawings are made current. In addition, the CONTRACTOR shall submit a signed certification with each Monthly Payment Request stating that Record Drawings are complete and accurate as of the date of the payment request.

5. If Structural Plans are prepared as part of this project, the CONTRACTOR shall provide final Marked Record Drawings for review and approval. The drawings shall be provided in pdf or blue beam format.

6. At the Completion of the Work and after Final Inspection, the CONTRACTOR shall submit to the ENGINEER, the final CAD Record Drawings and the Marked Record Drawings for review and approval. Any retained funds shall only be released upon the ENGINEER approval of the final CAD and Marked Record Drawings. The CONTRACTOR shall certify to the completeness and accuracy of the Record Drawings.

H. Record Project Manual shall be prepared in Microsoft Office Word format (latest version). The CONTRACTOR shall submit a signed certification with each Monthly Payment Request stating that the Record Project Manual is complete and accurate as of the date of the payment request. The CONTRACTOR shall submit to the ENGINEER, the Record Project Manual for review and approval. Any retained funds shall only be released upon the ENGINEER approval of the Record Project Manual.

I. An approved set of As-Bid Plans stamped by the City of Los Angeles Department of Building and Safety (LADBS) Plan Check Division must be kept on site for inspection by the City of Los Angeles Building and Safety Inspector. This set of stamped As-Bid Plans is a part of the Contract Documents and is to be protected as such. The stamped set is not to be marked on or used as filed construction Drawings or Record Drawings.

END OF SECTION

THIS PAGE INTENTIONALLY LEFT BLANK

SECTION 01810
FUNDAMENTAL COMMISSIONING REQUIREMENTS

PART 1 - GENERAL

1.1 DESCRIPTION

A. This section includes administrative and procedural requirements as well as a detailed description of the commissioning process. This section supplements other Division 1 Commissioning Sections and applies to Sections in Divisions 15 and 16 that specify testing of components and systems.

B. Basic Commissioning is intended to achieve the following objectives:

1. Verify that applicable equipment and systems are installed according to the manufacturer's recommendations and to industry accepted minimum standards and that they receive adequate operational checkout by installation contractors.

2. Verify and document proper performance of equipment and systems.

3. Verify that Operations and Maintenance (O&M) data is complete.

4. Verify that the City's operating and maintenance personnel are trained in accordance with the specifications.

C. Related Work:

1. 01330 Shop Drawings / Submittals.

2. 01770 Project Closeout.

3. 01813 Pre-functional Checklists.

4. 15050 Basic Mechanical Materials and Methods.

5. 15270 Mechanical Systems Commissioning.

6. 15280 Mechanical Testing Requirements.

7. 16100 Basic Electrical Materials and Methods.

8. 16560 Municipal Facilities Electrical Systems Commissioning.

9. 16570 Municipal Facilities Electrical Testing Requirements.

1.2 SUBMITTALS

A. Provide submittal documentation relative to commissioning as described in Section 01330 Shop Drawings/Submittals.

B. Contractor to submit the names of three independent Los Angeles City Fire Department certified testers to the Engineer. The Engineer will select one of the submitted testers to schedule and perform Regulation No. 4 testing.

1.3 DEFINITIONS

A. Commissioning Process: A systematic process which verifies that the building systems perform interactively according to the Design Intent Document. The commissioning process coordinates system documentation, equipment startup, control system calibration, testing and balancing, performance testing and training.

B. Commissioning Authority (CA): An entity contracted by the City that plans, schedules, and coordinates the Commissioning Team to implement the Commissioning Process.

C. Commissioning Plan: A document that provides the structure, schedule, and coordination for the commissioning process.

D. Design Intent Document: A written document that details functional requirements of the Project including expectations of how the Project will be used and operated. The Design Intent Document includes design goals, measurable performance criteria, success criteria, and supporting information.

E. Functional Test (FT): A documented test of the dynamic functioning and operation of equipment and systems with the goal of verifying that the Design Intent is met. Test requirements are included in these specifications. Test procedures are developed and results documented by the Commissioning Authority. Test procedures are completed by the Contractor.

F. Prefunctional Checklist (PC): A written checklist that includes checks and tests prerequisite to the equipment's Functional Test. Draft checklists are included in the specifications. The Commissioning Authority assists the Contractor in finalizing the checklists. The Checklists are completed by the Contractor and verified by the Commissioning Authority.

1.4 COORDINATION

Items listed below require the Contractor to coordinate between the sub-contractors, INSPECTOR, GSD building maintenance representative, and the Commissioning Authority. Details regarding each item are given elsewhere in this Section and/or other commissioning sections of the specifications.

A. Pre-Commissioning Meeting: Conducted by the City's Project Manager during which the CA reviews the commissioning process with the commissioning team members.

B. Coordination Meetings: Attend meetings throughout construction, scheduled by the ENGINEER, to plan, coordinate, schedule future activities, and resolve problems.

C. Start-up Plans: Work with the CA to develop startup plans and startup documentation formats, including prefunctional checklists.

D. Equipment Start-up: Utilize start-up plans to coordinate equipment start-up, manufacturers' testing, and other required testing to minimize duplication of work.

E. Testing, Adjusting, and Balancing: Coordinate testing, adjusting, and balancing with the Commissioning Authority so that the CA can witness the processes.

F. Functional Testing: Coordinate functional testing with the Commissioning Authority so that they can witness testing.

G. Training: Coordinate training of owner's staff with Commissioning Authority so that the CA can verify that training is conducted per commissioning requirements.

1.5 SYSTEMS TO BE COMMISSIONED

A. The following systems will be commissioned in this project:

1. Wet Well Pumps.

2. Electrical Systems Associated With Pumps and Valve Vaults.

   a. Building Service and Distribution.

   b. Uninterrupted power supply (UPS).

3. Stormwater Pre-Treatment and Treatment Devices.

4. SCADA Control System and Instrumentation including Flowmeters, level sensors, hydrocarbon sensors, facility alarms, actuators and other related equipment.

5. Irrigation System and Controls.

6. Lake Water Treatment System.

   a. New or rehabilitated lake recirculation pump.

PART 2 - PRODUCTS

2.1 TEST EQUIPMENT

A. Provide all testing equipment required by the Commissioning Process except data logging equipment. Data logging equipment is provided by the CA.

B. Provide any special equipment, tools, and instruments that are only available from the equipment supplier, which are specific to the equipment, and which are required for testing.

PART 3 - EXECUTION

3.1 MEETINGS

A. Commissioning Pre-Construction Meeting: Within 60 days of commencement of construction, the ENGINEER will schedule a commissioning pre-construction meeting with the commissioning team in attendance. Commissioning Authority shall distribute meeting minutes to commissioning team. Attendance is mandatory for the following team members:

1. Commissioning Authority.

2. Contractor's Site Supervisor.

3. Contractor's Project Scheduling personnel.

4. Mechanical sub-contractor.

5. Electrical sub-contractor.

6. GSD Building Maintenance Division representative.

7. INSPECTOR.

B. Miscellaneous Meetings. The ENGINEER will schedule other meetings, generally in conjunction with regularly scheduled site meetings as construction progresses. Meetings will cover coordination, deficiency resolution, and planning issues with particular subcontractors.

3.2 START-UP AND PREFUNCTIONAL CHECKLISTS

A. Perform a full pre-functional checkout of each piece of equipment. The pre-functional testing for a given system must be successfully completed prior to formal functional testing.

B. Equipment shall not be "temporarily" started (for heating and cooling) until the Start-Up Plan is completed.

C. The Contractor shall prepare start-up plans for equipment to be commissioned. Subcontractors responsible for pre-functional checklists and startup will be identified at the pre-commissioning meeting. Submit start-up plans to the Engineer for review and approval; start-up plans shall consist of, but not be limited to:

1. The manufacturer's standard written start-up procedures copied from the installation manuals, with check boxes by each procedure and a signature block at the end.

2. Field checkout sheets normally used by the sub-contractor.

3. Forms normally issued by the sub-contractor to document tests required in the specifications.

4. Final pre-functional checklists (drafts are included in the specifications). The checklists for mechanical systems include sensor and actuator calibration.

5. Schedule that includes equipment installation, contractor start-up, manufacturer start-up, and other tests required by the specifications. Schedule shall state when documents in the start-up plan will be completed.

D. At least 90 days prior to the start of commissioning, the Contractor shall submit a commissioning package for the equipment to be commissioned. This package shall include the following information:

1. Equipment manufacturer's operating & maintenance instructions.

2. Equipment manufacturer's installation and start-up manual.

3. Start-up plans as required in this section.

3.3 REQUIREMENTS FOR FUNCTIONAL TESTING

A. Complete the following prior to functional testing:

1. Arrange for commissioning observations to be performed by the Commissioning Authority, and GSD Building Maintenance Division representative.

2. Complete and approve the Start-up Plan.

3. Correct deficiencies identified during start-up.

4. Record pretest set points.

3.4 FUNCTIONAL TESTING

A. Perform functional testing after the testing requirements listed in Paragraph 3.3 are completed.

B. Perform functional testing under the observation of the commissioning authority who will record the results of the functional test procedures.

C. Perform all specified tests according to approved testing procedures.

1. Verify and test performance using actual conditions whenever possible.

2. Simulate conditions by imposing an artificial load when it is not practical to test under actual conditions and when written approval for simulated conditions is received from Commissioning Authority. Before simulating conditions, calibrate testing instruments. Set and document simulated conditions and methods of simulation. After test, return settings to normal operating conditions.

3. Alter set points when simulating conditions is not practical and when written approval to do so is received from Commissioning Authority.

4. Overwrite sensor values with a signal generator when actual or simulated conditions and altering set points are not practical. Do not use the sensor to act as the signal generator to simulate conditions or overwrite values.

D. The Commissioning Authority will review and approve functional testing results. Deficiencies found during testing shall be corrected by the Contractor and retested. Where there is a dispute over a deficiency, the ENGINEER shall be the final authority.

E. Problem Solving: The CA will recommend solutions to problems found, however, the burden of responsibility to solve, correct and retest problems is with the contractor and the design team.

3.5 REGULATION NO. 4 TESTING (Not Used)

3.6 COST OF RETESTING

A. Costs for retesting beyond one retest will be the responsibility of the Contractor, if the ENGINEER determines that the contractor is responsible for the deficiency. These costs shall include charges for the CA's time, Engineer and Inspector.

B. For a deficiency identified during functional testing but not included in the approved Start-up Plan: The CA will direct the retesting of the equipment once the deficiencies are corrected.

C. Retesting will not be considered a reason for a claim of delay or for a time extension by the contractor.

3.7 DEFERRED TESTING

A. Unforeseen Deferred Tests: Checks or tests not completed due to the building structure, required occupancy condition, or other condition may be delayed upon approval of the ENGINEER. These tests will be conducted in the same manner as the seasonal tests as soon as possible.

B. Seasonal Testing: Complete seasonal testing (tests delayed until weather conditions are closer to the system's design conditions) during the warranty period, as part of this contract. The CA will coordinate this activity. Tests shall be executed, documented and deficiencies corrected by the appropriate Subs, with facilities staff and the CA witnessing. The Contractor shall make adjustments to the Operations and Maintenance Data, as necessary.

3.8 WRITTEN WORK PRODUCTS

A. The commissioning process generates a number of written work products described in the Specifications. A summary of the written products follows. Where the product is developed by the subcontractors, the contractor shall be responsible for their production.

Product	Developed By
1. Design Intent Document	A/E
2. Commissioning Plan	CA
3. Commissioning schedules	CA, contractor and Subcontractors
4. Equipment & commissioning submittals	Subcontractors
5. Draft prefunctional checklists	CA with specifications
6. Startup Plan	Subcontractors
7. Completed Startup Plan	Subcontractors
8. Issues log (deficiencies)	CA
9. Deficiency reports	CA
10. Blank functional test forms	CA
11. Completed functional test forms	CA
12. O&M manuals	Subcontractors
13. Overall training plan	CA and Subcontractors
14. Specific training agendas	Subcontractors
15. Commissioning report	CA
17. Commissioning meeting minutes	CA or A/E consultants
18. Warranty Documents	Subcontractor

END OF SECTION

SECTION 01813
PREFUNCTIONAL CHECKLISTS

PART 1 - GENERAL

1.1 DESCRIPTION

A. This section contains sample Prefunctional Checklists. Most checklists contain items for several contractors. Contractor is to assign responsibility for each line item using the responsibility column.

Those executing the checklists shall perform only items that apply to the specific application at hand. These checklists do not take the place of the manufacturer's recommended checkout and start-up procedures or report. Coordinate with Section 01810 Start-up Plan to utilize these checklists.

Items that do not apply should be noted along with the reasons on the form. Contractor shall ensure that checklist items by their subcontractors are completed and checked off. "Contr." column or abbreviations in brackets to the right of an item refer to the contractor responsible to verify completion of this item.

1.2 PREFUNCTIONAL CHECKLISTS

A. Sample Prefunctional Checklists Included in this section are:

1. Packaged Rooftop AC Units.
2. Split AC and Heat Pump Units:
    a. Air cooled Compressor and Condenser.
    b. Air Handling Unit with DX Coil.
3. Evaporative Cooler.
4. Gas Fired Unit Heater.
5. General Occupancy Exhaust Fans.
6. Domestic Hot Water Heater.
7. Test & Air Balance.
8. Terminal Units.
9. Lighting System (and controls).
10. Piping (Dx Refrigeration).
11. Piping (Condensate).

12. Piping (Domestic Water).

13. Ductwork.

B. Contractor shall develop prefunctional checklists with the start-up plans. Electronic copies of these checklists are available upon request.

PART TWO - PRODUCTS

Not Used.

PART THREE - EXECUTION

Not Used.

END OF SECTION

Sample Prefunctional Checklist

Packaged Rooftop AC Units, Unit ID #'s: _____

Components Include: ____Supply Fans, ____Return/exhaust Fans, ____coils, ____ valves, ____ VFDs, ____ dampers, ____compressors, ___ condensers

Associated Checklists: Piping (DX Refrigeration) and Piping (Condensate)

1. Submittals / Approvals

Submittal. The above equipment and systems integral to them are complete and ready for functional testing. The checklist items are complete and have been checked off only by parties having direct knowledge of the event, as marked below, respective to each responsible contractor. This prefunctional checklist is submitted for approval, subject to an attached list of outstanding items yet to be completed. A Statement of Correction will be submitted upon completion of any outstanding areas. None of the outstanding items preclude safe and reliable functional tests being performed. ___ List attached.

_____ Mechanical Contractor	_____ Date	_____ Controls Contractor	_____ Date
_____ Electrical Contractor	_____ Date	_____ Sheet Metal Contractor	_____ Date
_____ TAB Contractor	_____ Date	_____ General Contractor	_____ Date

Prefunctional checklist items are to be completed as part of startup & initial checkout, preparatory to functional testing.

- This checklist does not take the place of the manufacturer's recommended checkout and startup procedures or report.
- Items that do not apply shall be noted with the reasons on this form (N/A = not applicable, BO = by others).
- If this form is not used for documenting, one of similar rigor shall be used.
- Contractors assigned responsibility for sections of the checklist shall be responsible to see that checklist items by their subcontractors are completed and checked off.
- "Contr." column or abbreviations in brackets to the right of an item refer to the contractor responsible to verify completion of this item. A/E = architect/engineer, All = all contractors, CA = commissioning agent, CC = controls contractor, EC = electrical contractor, GC = general contractor, MC = mechanical contractor, SC = sheet metal contractor, TAB = test and balance contractor.

Approvals. This filled-out checklist has been reviewed. Its completion is approved with the exceptions noted below.

_____ Commissioning Agent	_____ Date	_____ Owner's Representative	_____ Date

2. Installation Checks

Check if Okay. Enter N/A if not applicable. Enter Note number if deficient.

Check Equip Tag →					Contr.
Cabinet and General Installation					
Permanent labels affixed, including for fans					
Casing condition good: no dents, leaks, door gaskets installed					
Access doors close tightly - no leaks					
Boot between duct and unit tight and in good condition					
Vibration isolation equipment installed & released from shipping locks					
Maintenance access acceptable for unit and components					
Sound attenuation installed					
Thermal insulation properly installed and according to specification					
Instrumentation installed according to specification (thermometers, pressure gages, flow meters, etc.)					
Clean up of equipment completed per contract documents					
Filters installed and replacement type and efficiency permanently affixed to housing					
Piping and Coils					
No leaking apparent around refrigerant fittings					
All coils are clean and fins are in good condition					
All condensate drain pans clean and slope to drain per spec					
OSAT, MAT, SAT, RAT sensors properly located and secure (related OSAT sensor shielded)					
Sensors calibrated (See calibration section below)					
If split system, refrigerant piping in good condition and suction insulated					
P/T plugs and isolation valves installed per drawings					
Fans and Dampers					
Supply fan and motor alignment appear correct					
Supply fan belt tension & condition good					
Supply fan protective shrouds for belts in place and secure					
Supply fan area clean					
Supply fan and motor properly lubricated					
Return/exhaust fan and motor aligned					
Return/exhaust fan belt tension & condition good					
Return/exhaust fan protective shrouds for belts in place and secure					
Return/exhaust fan area clean					
Return/exhaust fan and motor lube lines installed and lubed					

Check Equip Tag →					Contr.
Filters installed and replacement type and efficiency permanently affixed to housing--construction filters removed					
Filter pressure differential measuring device installed and functional (magnahelic, inclined manometer, etc.)					
All dampers close tightly					
All damper linkages have minimum play					
Motors: premium efficiency verified, if spec'd?					
Compressor and Condenser					
Refrigerant sight glass clear of bubbles (if OSAT > 70F)					
Moisture indicator shows no moisture					
Correct oil level (check site glass during operation)					
Compressors and piping were leak tested, as required					
Crankcase heater on when unit is off					
Condenser coils clean and in good condition (air cooled)					
Adequate clearance for airflow around condenser					
Ducts (preliminary check)					
Sound attenuators installed					
Duct joint sealant properly installed					
No apparent severe duct restrictions					
Turning vanes in square elbows as per drawings					
OSA intakes located away from pollutant sources & exhaust outlets					
Pressure leakage tests completed					
Branch duct control dampers operable					
Balancing dampers installed as per drawings and TAB's site visit					
Electrical and Controls					
Power disconnects in place and labeled					
All electric connections tight					
Proper grounding installed for components and unit					
Safeties in place and operable					
Current overload heaters installed and correct size					
Auxiliary heaters installed					
Sensors calibrated (see section below)					
All building control system interlocks hooked up with packaged controls and functional					
Enthalpy control and sensor properly installed (if applicable)					
Related thermostats are installed					
Related building automation system points are installed					
All control devices, pneumatic tubing and wiring complete					
VFD					

Check Equip Tag →					Contr.
VFD powered (wired to controlled equipment)					
VFD interlocked to control system					
Static pressure or other controlling sensor properly located and per drawings and calibrated (see Section 6)					
Static pressure or other controlling sensor calibrated					
Drive location not subject to excessive temperatures					
Drive location not subject to excessive moisture or dirt					
Drive size matches motor size					
Internal setting designating the model is correct					
Motor FLA setting represents 100% to 105% of motor FLA rating					
Appropriate Volts vs Hz curve is being used					
Accel and decel times are around 10-50 seconds, except for special applications. Actual decel:_____, Accel:_____					
Lower frequency limit at 0 for VAV fans. Actual: _____					
Upper frequency limit set at 100%, unless explained otherwise					
Unit is programmed with full written programming record submitted					
RPM readout in BAS verified with VFD readout					
TAB					
Installation of system and balancing devices will allow balancing to be done per specified NEBB or AABC procedures & contract docs					
Final					
Safeties installed and safe operating ranges are established					
Functional test procedures for this equipment reviewed and approved by installing contractor					
If unit is started and will be running during construction: have quality filters on RA grills, etc. to minimize dirt in the ductwork and coils and in any finished areas. Verify moisture migration is not a problem due to improper pressures between spaces.					

Checklist items of Part 2 are all successfully completed for given trade… ____Yes ____No

3. Operational Checks (These augment mfr's list. This is not a functional performance test)

Check if Okay. Enter N/A if not applicable. Enter Note number if deficient.

Check Equip Tag →					Contr.
Supply fan rotation correct					
Return / exhaust fan rotation correct					
No unusual noise or vibration in supply and exhaust fans					
Condenser fan rotation correct (air cooled)					
Condenser fan acceptable noise and vibration (air cooled)					
Measure line to line voltage imbalance for 1/3 of the compressors: Compressor 1 Phase: (%Imbalance = 100 x (avg. - lowest) / avg.) Record in cell, all three phase voltages. Imbalance less than 2%?					
Compressor 2 Phase: (%Imbalance = 100 x (avg. - lowest) / avg.) Record in cell, all three phase voltages. Imbalance less than 2%?					
Record full load running amps for each compressor. _____rated FL amps x _____srvc factor = _____ (Max amps). Running less than max?					
Record full load running amps for each condenser fan. _____rated FL amps x _____srvc factor = _____ (Max amps). Running less than max?					
Fans > 5 hp Phase Checks: (% impalance = 100 x (avg. - lowest) / avg.) List fan & record all 3 voltages in cell. Imbalance less than 2%?					
Record full load running amps for each fan. _____rated FL amps x _____srvc factor = _____ (Max amps). Running less than max?					
Inlet vanes aligned in housing, actuator spanned, modulate smoothly and proportional to input signal and EMS readout.					
All dampers (OSA, RA, EA, etc.) stroke fully without binding and spans calibrated and BAS reading site verified (follow procedure in Calibration and Leak-by Test Procedures). List dampers checked: _____					
Valves stroke fully and easily and spanning is calibrated (follow procedure in Calibration and Leak-by Test Procedures). List each actuated valve here when spanned: _____					
Valves verified to not be leaking through coils when closed at normal operating pressure (follow procedure in Calibration and Leak-by Test Procedures).					

Check Equip Tag →					Contr.
The HOA switch properly activates and deactivates the unit					
Safeties installed and safe operating ranges for this equipment provided to the commissioning agent					
Specified sequences of operation and operating schedules have been implemented with all variations documented					
Specified point-to-point checks have been completed and documentation record submitted for this system					

Checklist items of Part 3 are all successfully completed for given trade… ___Yes ___No

4. Sensor and Actuator Calibration [Contr. = _____]

All field-installed temperature, relative humidity, CO, CO_2 and pressure sensors and gages, and all actuators (dampers and valves) on this piece of equipment shall be calibrated using the methods and tolerances given in the Calibration and Leak-by Test Procedures document. All test instruments shall have had a certified calibration within the last 12 months: Y/N_____. Sensors installed in the unit at the factory with calibration certification provided need not be field calibrated.

Sensor or Actuator & Location	Loc-ation OK	1st Gage or BAS Value	Instr. Meas'd Value	Final Gage or BAS Value	Pass Y/N?

Sensor & Location	Loc-ation OK	1st Gage or BAS Value	Instr. Meas'd Value	Final Gage or BAS Value	Pass Y/N?

Gage reading = reading of the permanent gage on the equipment. BAS = building automation system. Instr. = testing instrument. Visual = actual observation. The Contractor's own sensor check-out sheets may be used in lieu of the above, if the same recording fields are included and the referenced procedures are followed.

All sensors are calibrated within required tolerances … ____Yes ____No

-- END OF CHECKLIST --

Sample Prefunctional Checklist

AIR COOLED CONDENSER and COMPRESSOR, ID#'s_____

Components Are: ____ Split Heat Pumps, ____ Split AC Units

Associated Checklists: Air Handling Unit with DX Coil

1. Submittal / Approvals

Submittal. The above equipment and systems integral to them are complete and ready for functional testing. The checklist items are complete and have been checked off only by parties having direct knowledge of the event, as marked below, respective to each responsible contractor. This prefunctional checklist is submitted for approval, subject to an attached list of outstanding items yet to be completed. A Statement of Correction will be submitted upon completion of any outstanding areas. None of the outstanding items preclude safe and reliable functional tests being performed. ___ List attached.

_____	_____	_____	_____
Mechanical Contractor	Date	Controls Contractor	Date
_____	_____	_____	_____
Electrical Contractor	Date	Sheet Metal Contractor	Date
_____	_____	_____	_____
TAB Contractor	Date	General Contractor	Date

Prefunctional checklist items are to be completed as part of startup & initial checkout, preparatory to functional testing.

- This checklist does not take the place of the manufacturer's recommended checkout and startup procedures or report.
- Items that do not apply shall be noted with the reasons on this form (N/A = not applicable, BO = by others).
- If this form is not used for documenting, one of similar rigor shall be used.
- Contractors assigned responsibility for sections of the checklist shall be responsible to see that checklist items by their subcontractors are completed and checked off.
- "Contr." column or abbreviations in brackets to the right of an item refer to the contractor responsible to verify completion of this item. A/E = architect/engineer, All = all contractors, CA = commissioning agent, CC = controls contractor, EC = electrical contractor, GC = general contractor, MC = mechanical contractor, SC = sheet metal contractor, TAB = test and balance contractor, ____ = _____.

Approvals. This filled-out checklist has been reviewed. Its completion is approved with the exceptions noted below.

_____	_____	_____	_____
Commissioning Agent	Date	Owner's Representative	Date

2. Installation Checks

Check if Okay. Enter N/A if not applicable. Enter Note number if deficient.

Check Equip Tag →						Contr.
GENERAL INSTALLATION						
Permanent labels affixed, including for fans						
Casing condition good: no dents, leaks, door gaskets installed						
All coils are clean and fins are in good condition						
Vibration isolation bolts loosened						
Maintenance access acceptable for unit and components						
Clean up of equipment completed per contract documents						
PRE-START REQUIREMENTS						
Piping and Coils						
Refrigerant piping sized according to mfr's literature						
Refrigerant piping in good condition and suction insulated						
Liquid line solenoid valve located at evaporator coil, as required						
Compressor, liquid and suction line service valves open						
Site Charging						
Refrigerant lines evacuated and dehydrated per mfr recommendations						
Refrigerant charged by strictly using mfr recommended procedures and accurate instruments.						
Charging method used: Outside air temperature during charging:_____						
Final charging points are within 2°F liquid line or within 10psig head pressure (depending on method used) of optimal. Attach charging chart with final points marked with this report, including all calculations to determine optimal subcooling point.						
Leak checks made with leak detector around compressor, condenser, evaporator, TXVs, solenoid valves, filter driers and fusible plugs and other piping fittings. All leaks repaired.						
Refrigerant sight glass clear of bubbles (if OSAT>70F)						
Moisture indicator shows no moisture						
Compressor and Condenser						
Correct oil level (check site glass during operation, if available)						
Adequate clearance for airflow around condenser						
Crankcase heater (if applicable) energized long enough for startup						
Electrical and Controls						

Check Equip Tag →						Contr.
Proper power supply for unit						
Power disconnects in place and labeled						
All electric connections tight						
Proper grounding installed for components and unit						
Indoor unit operable and providing design air flow						
Circuit protection sized and installed properly						
Control system interlocks hooked up and functional						

- The checklist items of Part 2 are all successfully completed for given trade.....___ YES ___ NO

3. Operational Checks (These augment mfr's list. This is not the functional performance testing.)

Check if Okay. Enter comment or note number if deficient.

Check Equip Tag →						Contr.
Condenser fan rotation correct						
Measure line to line voltage phase imbalance for 1/3 of the compressors: Compressor 1 Phase: (%Imbalance = 100 x (avg. - lowest) / avg.) Record in cell, all three phase voltages. Imbalance less than 2%?						
Compressor 2 Phase: (%Imbalance = 100 x (avg. - lowest) / avg.) Record in cell, all three phase voltages. Imbalance less than 2%?						
Record full load running amps for each compressor. _____rated FL amps x _____srvc factor = _____ (Max amps). Running less than max?						
Fans > 5 Hp Phase Checks: (%Imbalance = 100 x (avg. - lowest) / avg.) Record all 3 voltages in cell. Imbalance less than 2%?						
Record full load running amps for each fan. _____rated FL amps x _____srvc factor = _____ (Max amps). Running less than max?						
No unusual noise or vibration during operation (condenser fan & compressor)						
Adjust the space temperature controls to cause a call for cooling. Verify that compressor starts and that supply air is cooled as expected.						
After 15 minutes of operation, record the readings in the OPERATIONAL RECORD table, below.						
Remove the call for cooling. Observe that compressor cycles off.						

Check if Okay. Enter comment or note number if deficient.

Check Equip Tag →						Contr.
Crankcase heater remains on when unit cycles off (if required)						
Startup report completed with this checklist attached						
Safeties installed and safe operating ranges for this equipment provided to the commissioning agent						
Functional test procedures for this equipment reviewed and approved by installing contractor						
Specified sequences of operation and operating schedules have been implemented with all variations documented						
Specified point-to-point checks have been completed and documentation record submitted for this system						

- The checklist items of Part 3 are all successfully completed for given trade.....___ YES ___ NO

Operational Record

Indoor fan speed	_____	Discharge pressure	_____	Evap entering air WB	_____
Condenser fan speed	_____	Discharge line temp	_____	Evap leaving air DB	_____
Oil pressure (optional)	_____	Entering cond. air temp.	_____	Evap leaving air WB	_____
Suction pressure	_____	Leaving cond. air temp.	_____	Compressor amps	_____
Suction line temp.	_____	Evap. entering air DB	_____	(L1 / L2 / L3)	

4. Sensor and Actuator Calibration Contr. [___]

All field-installed temperature, relative humidity, CO, CO_2 and pressure sensors and gages, and all actuators (dampers and valves) on this piece of equipment shall be calibrated using the methods and tolerances given in the Calibration and Leak-by Test Procedures document. All test instruments shall have had a certified calibration within the last 12 months: Y/N_____. Sensors installed in the unit at the factory with calibration certification provided need not be field calibrated.

Sensor or Actuator & Location	Loc-ation OK	1st Gage or BAS Value	Instr. Meas'd Value	Final Gage or BAS Value	Pass Y/N?

Sensor & Location	Loc-ation OK	1st Gage or BAS Value	Instr. Meas'd Value	Final Gage or BAS Value	Pass Y/N?

Gage reading = reading of the permanent gage on the equipment. BAS = building automation system. Instr. = testing instrument. Visual = actual observation. The Contractor's own sensor check-out sheets may be used in lieu of the above, if the same recording fields are included and the referenced procedures are followed.

- All sensors and actuators are calibrated within required tolerances.....___ YES ___ NO

-- END OF CHECKLIST --

Sample Prefunctional Checklist

Air Handling Unit with DX Coil

Components Include: ____ Supply Fan, ____ DX Cooling Coils, ____ Valves, ____ Dampers, ____ Flow Elements

Associated Checklists: Air Cooled Condenser and Compressor

1. Submittals / Approvals

Submittal. The above equipment and systems integral to them are complete and ready for functional testing. The checklist items are complete and have been checked off only by parties having direct knowledge of the event, as marked below, respective to each responsible contractor. This prefunctional checklist is submitted for approval, subject to an attached list of outstanding items yet to be completed. A Statement of Correction will be submitted upon completion of any outstanding areas. None of the outstanding items preclude safe and reliable functional tests being performed.___ List attached.

_____	_____	_____	_____
Mechanical Contractor	Date	Controls Contractor	Date
_____	_____	_____	_____
Electrical Contractor	Date	Sheet Metal Contractor	Date
_____	_____	_____	_____
TAB Contractor	Date	General Contractor	Date

Prefunctional checklist items are to be completed as part of startup & initial checkout, preparatory to functional testing.

- This checklist does not take the place of the manufacturer's recommended checkout and startup procedures or report.
- Items that do not apply shall be noted with the reasons on this form (N/A = not applicable, BO = by others).
- Contractors assigned responsibility for sections of the checklist shall be responsible to see that checklist items by their subcontractors are completed and checked off.
- "Contr." column or abbreviations in brackets to the right of an item refer to the contractor responsible to verify completion of this item. A/E = architect/engineer, All = all contractors, CA = commissioning agent, CC = controls contractor, EC = electrical contractor, GC = general contractor, MC = mechanical contractor, SC = sheet metal contractor, TAB = test and balance contractor.

Approvals. This filled-out checklist has been reviewed. Its completion is approved with the exceptions noted below.

_____	_____	_____	_____
Commissioning Agent	Date	Owner's Representative	Date

2. Installation Checks

Check if Okay. Enter N/A if not applicable. Enter note if deficient.

Check Equipment ID _____	Yes	Note	Contr
Cabinet and General Installation			
Permanent labels affixed, including for fans			
Casing condition good - (no dents, no leaks, gaskets installed)			
Access doors close tightly – (no leaks)			
Connection between duct and unit tight, without leaks and in good condition			
Vibration isolation equipment installed & released from shipping locks			
Maintenance access acceptable for unit and components			
Sound attenuation installed			
Thermal insulation properly installed and according to specification - (no damage)			
Instrumentation installed according to specification - (pressure gauges etc.)			
Clean up of equipment completed per contract documents			
Filters installed and replacement type and efficiency permanently affixed to housing – (construction filters removed)			
Valves, Piping and Coils			
Pipe fittings complete and pipes properly supported			
Pipes properly labeled			
Suction line properly insulated			
Driers in place and clean			
Piping system properly purged			
No leaking apparent around fittings			
Specified coil installed			
Coils are clean and fins are in good condition			
Condensate drain pans clean and slope to drain			
Condensate drain pans are stainless steel and according to specifications			
Valves properly labeled			
Valves installed in proper direction			
Properly size automatic TXV’s installed			
Sensors properly located and installed SAT, RAT temperature sensors			
Sensors calibrated (See calibration section below)			
P/T plugs installed per drawings			

Check Equipment ID _____	Yes	Note	Contr
Fans and Dampers			
Supply fan and motor alignment correct			
Supply Fan Motor: Premium efficiency installed (note efficiency_____%)			
Supply fan belt tension correct & condition good			
Supply fan protective shrouds for belts in place and secure			
Supply fan and motor properly lubricated			
Supply fan flow element installed correctly and according to specification			
Supply fan area clean			
Return/exhaust fan and motor alignment correct			
Return/Exhaust Fan Motor: Premium efficiency installed (note efficiency_____%)			
Return/exhaust fan belt tension correct & condition good			
Return/exhaust fan protective shrouds for belts in place and secure			
Return/exhaust fan and motor lube lines installed and lubed			
Return/exhaust fan flow element installed correctly and according to specification			
Return/exhaust fan area clean			
Outside air flow stations installed correctly and according to specification			
Filters clean and tight fitting			
Filter pressure differential magnehelic installed, functional and connected to BAS			
Dampers close tightly			
Dampers move freely without binding			
Damper linkages have minimum play			
Damper sections installed square			
Ducts (preliminary check)			
Sound attenuators installed			
Duct joint sealant properly installed			
No severe duct restrictions			
Branch duct control dampers operable			
Ducts cleaned as per specifications			
Electrical and Controls			
Power disconnects in place and labeled			
Electric connections tight			
Power to light fixtures			
Proper grounding installed for components and unit			
Safeties in place and operable			

Check Equipment ID _____	Yes	Note	Contr
Overload breakers installed and correct size			
Sensors calibrated (see below)			
Outdoor Condensing unit system controls hooked up and functional			
Control system interlocks hooked up and functional			
Control devices, pneumatic tubing and wiring complete			
Supply Fan VFC			
VFC powered (wired to controlled equipment)			
VFC connected to BAS			
Supply fan static pressure sensor properly located per drawings and calibrated (see below)			
Drive location not subject to excessive ambient temperatures			
Drive location not subject to excessive moisture or dirt			
Drive size matches motor size			
VFC setup for variable torque operation			
Programmed carrier frequency does not exceed 8 kHz. (_____kHz)			
Input of motor FLA represents 100% to 115% of motor FLA rating			
Appropriate Volts vs. Hz curve is being used			
Acceleration and deceleration times Actual deceleration = _____ Actual acceleration = _____			
Lower frequency limit. Actual = _____ Hz			
Upper frequency limit set to 100%. (Actual = _____ Hz			
VFC output in kW calibrated to 0 – 115% full load kW			
Unit is programmed with full written programming on site for inclusion in the O&M manuals			
Return/Exhaust Fan VFC			
VFC powered (wired to controlled equipment)			
VFC connected to BAS			
Supply fan static pressure sensor properly located per drawings and calibrated (see below)			
Drive location not subject to excessive ambient temperatures			
Drive location not subject to excessive moisture or dirt			
Drive size matches motor size			
VFC setup for variable torque operation			
Programmed carrier frequency does not exceed 8 kHz. (_____kHz)			
Input of motor FLA represents 100% to 115% of motor FLA rating			
Appropriate Volts vs. Hz curve is being used			

Check Equipment ID _____	Yes	Note	Contr
Acceleration and deceleration times Actual deceleration = _____ Actual acceleration = _____			
Lower frequency limit. Actual = _____ Hz			
Upper frequency limit set to 100%. (Actual = _____ Hz			
VFC output in kW calibrated to 0 – 115% full load kW			
Unit is programmed with full written programming on site for inclusion in the O&M manuals			
TAB			
Installation of system and balancing devices allowed balancing to be completed following specified NEBB or AABC procedures and contract documents (for heat pumps, verify heating and cooling performance)			
Final			
Startup report completed with this checklist attached			
Safeties installed and safe operating ranges are established			
Functional test procedures for this equipment reviewed and approved by installing contractor			
If unit is started and will be running during construction: quality filters on RA grills, etc. to minimize dirt in the ductwork and coils and in any finished areas. Verify moisture migration is not a problem, due to improper pressures between spaces.			

Checklist items of Part 2 are successfully completed for given trade… ____Yes ____No

5. Operational Checks (These only augment, and do not replace, the manufacturers list. This is not a functional performance test)

Check if Okay. Enter N/A if not applicable. Enter Note number if deficient.

Check Equipment ID _____	Yes	Note	Contr
Supply fan rotation correct			
Return/exhaust fan rotation correct			
Supply Fan Motor Phase Checks: (%Imbalance = 100 x (avg. - lowest) / avg.) Record phase-to-phase voltages: AB_____, AC_____, BC_____. Imbalance less than 2%?			
Return/Exhaust Fan Motor Phase Checks: (%Imbalance = 100 x (avg. - lowest) / avg.) Record phase-to-phase voltages: AB_____, AC_____, BC_____. Imbalance less than 2%?			
Record supply fan full load running amps _____amps. _____ rated FL amps x _____ service factor = _____ (Max amps). Running less than max?			
Record return/exhaust fan full load running amps _____amps. _____ rated FL amps x _____ service factor = _____ (Max amps). Running less than max?			

Check Equipment ID _____	Yes	Note	Contr
Supply fan acceptable noise & vibration			
Return /exhaust fan acceptable noise & vibration			
Supply Fan VFC spanned to modulate smoothly and proportionally to input signal and provide accurate BAS status readout			
Return/Exhaust Fan VFC spanned to modulate smoothly and proportionally to input signal and provide accurate BAS status readout			
Supply Fan VFC operates properly in “Auto, OFF and Bypass”			
Return/Exhaust Fan VFC operates properly in “Auto, OFF and Bypass”			
Dampers stroke fully without binding and spans calibrated and BAS reading site verified. List dampers checked: _____ _____			
Valves stroke fully and easily and spanning is calibrated. List each actuated valve here when spanned: _____ _____			
Valves verified to not be leaking through coils when closed at normal operating pressure.			
The HOA switch properly activates and deactivates the unit			
Specified sequences of operation and operating schedules have been implemented with variations documented			
Specified point-to-point checks have been completed and documentation record submitted for this system			

Checklist items of Part 3 are successfully completed for given trade… ____Yes ____No

4. Sensor and Actuator Calibration [Contr. = _____]

Field-installed temperature, relative humidity, CO2 and pressure sensors and gauges, and actuators (dampers and valves) on this piece of equipment shall be calibrated using the methods and tolerances given in the Calibration and Leak-by Test Procedures document. Test instruments shall have had a certified calibration within the last 12 months: Y/N_____. Sensors installed in the unit at the factory with a calibration certification provided do not need to be field calibrated. Calibrate heat pump thermostats at heating set point and at cooling set point.

Sensor	Loc-ation OK	1st Gauge or BAS Value	Instr. Meas'd Value	Final Gauge or BAS Value	Pass Y/N?
Super Heat					
SA Temp.					
RA Temp.					
RA CFM					
SA CFM					

Sensor	Loc-ation OK	1st Gauge or BAS Value	Instr. Meas'd Value	Final Gauge or BAS Value	Pass Y/N?
SF S.P.					
Filter DP					

Gauge reading = reading of the permanent gauge on the equipment. BAS = building automation system. Instr. = testing instrument. Visual = actual observation. The Contractor's own sensor check-out sheets may be used in lieu of the above, if the same recording fields are included and the referenced procedures are followed.

Sensors are calibrated within required tolerances … ____Yes ____No

-- END OF CHECKLIST --

Sample Prefunctional Checklist

Evaporative Cooler, Unit ID #'s: _____

Components Include: ____Supply Fan ____Porous Media, ____ Valves

Associated Checklists: _____

1. Submittals / Approvals

Submittal. The above equipment and systems integral to them are complete and ready for functional testing. The checklist items are complete and have been checked off only by parties having direct knowledge of the event, as marked below, respective to each responsible contractor. This prefunctional checklist is submitted for approval, subject to an attached list of outstanding items yet to be completed. A Statement of Correction will be submitted upon completion of any outstanding areas. None of the outstanding items preclude safe and reliable functional tests being performed.___ List attached.

_____ Mechanical Contractor	_____ Date	_____ Controls Contractor	_____ Date
_____ Electrical Contractor	_____ Date	_____ Sheet Metal Contractor	_____ Date
_____ TAB Contractor	_____ Date	_____ General Contractor	_____ Date

Prefunctional checklist items are to be completed as part of startup & initial checkout, preparatory to functional testing.

- This checklist does not take the place of the manufacturer's recommended checkout and startup procedures or report.
- Items that do not apply shall be noted with the reasons on this form (N/A = not applicable, BO = by others).
- If this form is not used for documenting, one of similar rigor shall be used.
- Contractors assigned responsibility for sections of the checklist shall be responsible to see that checklist items by their subcontractors are completed and checked off.
- "Contr." column or abbreviations in brackets to the right of an item refer to the contractor responsible to verify completion of this item. A/E = architect/engineer, All = all contractors, CA = commissioning agent, CC = controls contractor, EC = electrical contractor, GC = general contractor, MC = mechanical contractor, SC = sheet metal contractor, TAB = test and balance contractor.

Approvals. This filled-out checklist has been reviewed. Its completion is approved with the exceptions noted below.

_____ Commissioning Agent	_____ Date	_____ Owner's Representative	_____ Date

2. Installation Checks

Check if Okay. Enter N/A is not applicable. Enter Note number if deficient.

Check Equip Tag →					Contr.
Cabinet and General Installation					
Permanent labels affixed, including for fans					
Casing condition good: no dents, leaks, door gaskets installed					
Access doors close tightly - no leaks					
Boot between duct and unit tight and in good condition					
Vibration isolation equipment installed & released from shipping locks					
Maintenance access acceptable for unit and components					
Thermal insulation properly installed and according to specification					
Instrumentation installed according to specification (thermometers, pressure gages, flow meters, etc.)					
Clean up of equipment completed per contract documents					
Filters installed and replacement type and efficiency permanently affixed to housing					
Piping and Water Distribution					
No leaking apparent around supply water and drain fittings					
Porous Media is clean and in good condition					
All drain pans clean and sloped per spec.					
OSAT,, SAT,, temperature sensors properly located and secure (related OSAT sensor shielded)					
Basin conductivity sensor installed and operating properly					
Sensors calibrated (See calibration section below)					
Isolation valves installed per drawings					
Bleed valve is piped to drain. (if applicable)					
Drain Pump output is piped to drain. (if applicable)					
Fans and Dampers					
Supply fan and motor alignment appear correct					
Supply fan belt tension & condition good					
Supply fan area clean					
Supply fan and motor properly lubricated					
Filters installed and replacement type and efficiency permanently affixed to housing--construction filters removed					
Porous Media installed and replacement type and efficiency permanently affixed to housing					
Filter pressure differential measuring device installed and functional (magnahelic, inclined manometer, etc.)					
All dampers close tightly					

Check Equip Tag →					Contr.
All damper linkages have minimum play					
Motor: Premium Efficiency verified, if spec'd?					
Ducts (preliminary check)					
Unit is designed for duct applications					
Duct joint sealant properly installed					
No apparent severe duct restrictions					
OSA intakes located away from pollutant sources & exhaust outlets					
Pressure leakage tests completed					
Branch duct control dampers operable					
Balancing dampers installed as per drawings and TAB's site visit					
Moisture resistant ductwork install adjacent to unit.					
Electrical and Controls					
Power disconnects in place and labeled					
All electric connections tight					
Proper grounding installed for components and unit					
Safeties in place and operable					
Unit connected to GFCI circuit					
Current overload heaters installed and correct size					
Auxiliary heaters installed (if applicable)					
Sensors calibrated (see section below)					
All building control system interlocks hooked up with packaged controls and functional					
Enthalpy control and sensor properly installed (if applicable)					
Related thermostats are installed					
Related building automation system points are installed (if applicable)					
All control devices, and wiring complete					
Drain pump control operation operable. (if applicable)					
Static pressure or other controlling sensor properly located and per drawings and calibrated (see Section 6)					
Static pressure or other controlling sensor calibrated					
Internal setting designating the model is correct					
Motor FLA setting represents 100% to 105% of motor FLA rating					
TAB					
Installation of system and balancing devices will allow balancing to be done per specified NEBB or AABC procedures & contract docs					
Final					

Check Equip Tag →					Contr.
Safeties installed and safe operating ranges are established					
Functional test procedures for this equipment reviewed and approved by installing contractor					

Checklist items of Part 2 are all successfully completed for given trade… ____Yes ____No

3. Operational Checks (These augment mfr's list. This is not a functional performance test)

Check if Okay. Enter N/A is not applicable. Enter Note number if deficient.

Check Equip Tag →					Contr.
Supply fan rotation correct					
No unusual noise or vibration in supply fans					
Bleed valve operates at specified rate					
Fill valve cycles on and off with water level control mechanism.					
Cooler pump distributes water to porous media.					
Drain pump drains unit according to control settings.					
Measure line to line voltage imbalance for unit: Power 1 Phase: (%Imbalance = 100 x (avg. - lowest) / avg.) Record in cell, all three phase voltages. Imbalance less than 2%?					
Record full load running amps for unit. _____rated FL amps x _____service factor = _____ (Max amps). Running less than max?					
Inlet vanes aligned in housing, actuator spanned, modulate smoothly and proportional to input signal and EMS readout.					
All dampers (OSA, etc.) stroke fully without binding and spans calibrated and BAS reading site verified (follow procedure in Calibration and Leak-by Test Procedures). List dampers checked: _____					
Valves stroke fully and easily and spanning is calibrated (follow procedure in Calibration and Leak-by Test Procedures). List each actuated valve here when spanned: _____					
Valves verified to not be leaking when closed at normal operating pressure (follow procedure in Calibration and Leak-by Test Procedures).					
The HOA switch properly activates and deactivates the unit					
Safeties installed and safe operating ranges for this equipment provided to the commissioning agent					
Specified sequences of operation and operating schedules have been implemented with all variations documented					

Check Equip Tag →					Contr.
Specified point-to-point checks have been completed and documentation record submitted for this system					

Checklist items of Part 3 are all successfully completed for given trade… ___Yes ___No

4. Sensor and Actuator Calibration [Contr. = _____]

All field-installed temperature, relative humidity, CO, CO_2 and pressure sensors and gages, and all actuators (dampers and valves) on this piece of equipment shall be calibrated using the methods and tolerances given in the Calibration and Leak-by Test Procedures document. All test instruments shall have had a NIST certified calibration within the last 12 months: Y/N_____. Sensors installed in the unit at the factory with calibration certification provided need not be field calibrated.

Sensor or Actuator & Location	Loc-ation OK	1st Gage or BAS Value	Instr. Meas'd Value	Final Gage or BAS Value	Pass Y/N?

Sensor & Location	Loc-ation OK	1st Gage or BAS Value	Instr. Meas'd Value	Final Gage or BAS Value	Pass Y/N?

Gauge reading = reading of the permanent gauge on the equipment. BAS = building automation system. Instrument = testing instrument. Visual = actual observation. The Contractor's own sensor check-out sheets may be used in lieu of the above, if the same recording fields are included and the referenced procedures are followed.

All sensors are calibrated within required tolerances … ____Yes ____No

-- END OF CHECKLIST --

Sample Prefunctional Checklist

Gas Fired Unit Heater, Unit ID #'s: _____

Components Include: ____Supply Fan, ____ Valves, ____ dampers

Associated Checklists: _____

1. Submittals / Approvals

Submittal. The above equipment and systems integral to them are complete and ready for functional testing. The checklist items are complete and have been checked off only by parties having direct knowledge of the event, as marked below, respective to each responsible contractor. This prefunctional checklist is submitted for approval, subject to an attached list of outstanding items yet to be completed. A Statement of Correction will be submitted upon completion of any outstanding areas. None of the outstanding items preclude safe and reliable functional tests being performed.___ List attached.

_____ Mechanical Contractor	_____ Date	_____ Controls Contractor	_____ Date
_____ Electrical Contractor	_____ Date	_____ Sheet Metal Contractor	_____ Date
_____ TAB Contractor	_____ Date	_____ General Contractor	_____ Date

Prefunctional checklist items are to be completed as part of startup & initial checkout, preparatory to functional testing.

- This checklist does not take the place of the manufacturer's recommended checkout and startup procedures or report.
- Items that do not apply shall be noted with the reasons on this form (N/A = not applicable, BO = by others).
- If this form is not used for documenting, one of similar rigor shall be used.
- Contractors assigned responsibility for sections of the checklist shall be responsible to see that checklist items by their subcontractors are completed and checked off.
- "Contr." column or abbreviations in brackets to the right of an item refer to the contractor responsible to verify completion of this item. A/E = architect/engineer, All = all contractors, CA = commissioning agent, CC = controls contractor, EC = electrical contractor, GC = general contractor, MC = mechanical contractor, SC = sheet metal contractor, TAB = test and balance contractor.

Approvals. This filled-out checklist has been reviewed. Its completion is approved with the exceptions noted below.

_____ Commissioning Agent	_____ Date	_____ Owner's Representative	_____ Date

2. Installation Checks

Check if Okay. Enter N/A if not applicable. Enter Note number if deficient.

Check Equip Tag →					Contr.
Cabinet and General Installation					
Permanent labels affixed, including for fans					
Casing condition good: no dents, leaks, door gaskets installed					
Access doors close tightly - no leaks					
Flue connection tight and in good condition					
Vibration isolation equipment installed & released from shipping locks					
Maintenance access acceptable for unit and components					
Adequate clearance for intake air					
Unit faces away from combustible items					
Thermal insulation properly installed and according to specification					
Instrumentation installed according to specification					
Clean up of equipment completed per contract documents					
Natural Gas Piping					
No leaking apparent around fittings					
Sensors calibrated (See calibration section below)					
Pipes properly labeled					
Pipe penetrations properly sealed					
Isolation valves installed					
Valves					
Valve labels permanently affixed					
Valves installed in proper direction					
No leaks					
Pressure relief valves tested					
Valves that require a positive shut-off are verified to not be leaking when closed at normal operating pressure. List: _____					
Fans and Dampers					
Supply fan and motor alignment appear correct					
Supply fan protective shrouds for belts in place and secure					
Supply fan area clean					
Supply fan and motor properly lubricated					
All dampers close tightly					
All damper linkages have minimum play					
Motors: Premium Efficiency verified, if spec'd?					
Electrical and Controls					
Power disconnects in place and labeled					
All electric connections tight					
Proper grounding installed for components and unit					

Check Equip Tag →					Contr.
Safeties in place and operable					
Current overload heaters installed and correct size					
Sensors calibrated (see section below)					
All building control system interlocks hooked up with packaged controls and functional					
Related thermostats are installed					
Related building automation system points are installed (if applicable)					
All control devices, pneumatic tubing and wiring complete					
TAB					
Installation of system and balancing devices will allow balancing to be done per specified NEBB or AABC procedures & contract docs					
Final					
Safeties installed and safe operating ranges are established					
Functional test procedures for this equipment reviewed and approved by installing contractor					

Checklist items of Part 2 are all successfully completed for given trade… ____Yes ____No

3. Operational Checks (These augment mfr's list. This is not a functional performance test)
Check if Okay. Enter N/A if not applicable. Enter Note number if deficient.

Check Equip Tag →					Contr.
Supply fan rotation correct					
No unusual noise or vibration in supply fan					
Record full load running amps for each fan. _____rated FL amps x _____service factor = _____ (Max amps). Running less than max?					
Valves stroke fully and easily and spanning is calibrated (follow procedure in Calibration and Leak-by Test Procedures). List each actuated valve here when spanned: _____					
The HOA switch properly activates and deactivates the unit					
Safeties installed and safe operating ranges for this equipment provided to the commissioning agent					
Specified sequences of operation and operating schedules have been implemented with all variations documented					
Specified point-to-point checks have been completed and documentation record submitted for this system (if applicable)					

Checklist items of Part 3 are all successfully completed for given trade… ___Yes ___No

4. Sensor and Actuator Calibration [Contr. = _____]

All field-installed temperature, relative humidity, CO, CO_2 and pressure sensors and gages, and all actuators (dampers and valves) on this piece of equipment shall be calibrated using the methods and tolerances given in the Calibration and Leak-by Test Procedures document. All test instruments shall have had a NIST certified calibration within the last 12 months: Y/N_____. Sensors installed in the unit at the factory with calibration certification provided need not be field calibrated.

Sensor or Actuator & Location	Loc-ation OK	1st Gage or BAS Value	Instr. Meas'd Value	Final Gage or BAS Value	Pass Y/N?

Sensor & Location	Loc-ation OK	1st Gage or BAS Value	Instr. Meas'd Value	Final Gage or BAS Value	Pass Y/N?

Gauge reading = reading of the permanent gauge on the equipment. BAS = building automation system. Instrument = testing instrument. Visual = actual observation. The Contractor's own sensor check-out sheets may be used in lieu of the above, if the same recording fields are included and the referenced procedures are followed.

All sensors are calibrated within required tolerances … ____Yes ____No

-- END OF CHECKLIST --

Sample Prefunctional Checklist

Exhaust Fans, Unit ID #'s: _____

1. Submittals / Approvals

Submittal. The above equipment and systems integral to them are complete and ready for functional testing. The checklist items are complete and have been checked off only by parties having direct knowledge of the event, as marked below, respective to each responsible contractor. This prefunctional checklist is submitted for approval, subject to an attached list of outstanding items yet to be completed. A Statement of Correction will be submitted upon completion of any outstanding areas. None of the outstanding items preclude safe and reliable functional tests being performed.___ List attached.

_____ Mechanical Contractor	_____ Date	_____ Controls Contractor	_____ Date
_____ Electrical Contractor	_____ Date	_____ Sheet Metal Contractor	_____ Date
_____ TAB Contractor	_____ Date	_____ General Contractor	_____ Date

Prefunctional checklist items are to be completed as part of startup & initial checkout, preparatory to functional testing.

- This checklist does not take the place of the manufacturer's recommended checkout and startup procedures or report.
- Items that do not apply shall be noted with the reasons on this form (N/A = not applicable, BO = by others).
- If this form is not used for documenting, one of similar rigor shall be used.
- Contractors assigned responsibility for sections of the checklist shall be responsible to see that checklist items by their subcontractors are completed and checked off.
- "Contr." column or abbreviations in brackets to the right of an item refer to the contractor responsible to verify completion of this item. A/E = architect/engineer, All = all contractors, CA = commissioning agent, CC = controls contractor, EC = electrical contractor, GC = general contractor, MC = mechanical contractor, SC = sheet metal contractor, TAB = test and balance contractor.

Approvals. This filled-out checklist has been reviewed. Its completion is approved with the exceptions noted below.

_____ Commissioning Agent	_____ Date	_____ Owner's Representative	_____ Date

2. Installation Checks

Check if Okay. Enter N/A if not applicable. Enter Note number if deficient.

Check Equip Tag →					Contr.
Cabinet and General Installation					
Permanent labels affixed					
Casing condition good: no dents or leaks					
Mountings checked and shipping bolts removed					
Vibration isolators installed					
Equipment guards installed					
Pulleys aligned					
Belt tension correct					
Plenums clear of debris					
Fans rotate freely					
Fire and balance dampers installed					
Back draft dampers installed per drawings and operate freely					
Duct system complete					
Electrical					
Electrical connections complete					
Disconnect switch installed					
Overload heaters in place					
Control connections complete					

Checklist items of Part 2 are all successfully completed for given trade… ____Yes ____No

3. Operational Checks (These augment mfr's list. This is not a functional performance test)

Check if Okay. Enter N/A if not applicable. Enter Note number if deficient.

Check Equip Tag →					Contr.
Fan rotation correct					
Electrical interlocks verified					
Any fan status indicators functioning					
No unusual vibration or and noise					
Record full load running amps for each fan. _____rated FL amps x _____srvc factor = _____ (Max amps). Running less than max?					
Check voltage: Rate = _____ Actual = _____ Within 5%?					
The disconnect switch properly operates					
After 24 hours of operation, recheck belt tension and alignment					

Checklist items of Part 3 are all successfully completed for given trade… ___Yes ____No

-- END OF CHECKLIST --

Sample Prefunctional Checklist

Domestic Hot Water Heater(s), Unit ID #'s: _____

Associated Checklists: Piping (Domestic Water)

1. Submittals / Approvals

Submittal. The above equipment and systems are installed and ready for functional testing. The checklist items are completed and have been checked off by parties having direct knowledge of the event, as marked below, respective to each responsible contractor. This prefunctional checklist is submitted subject to an attached list of outstanding items yet to be completed. A Statement of Correction will be submitted upon completion of outstanding areas. ___ List attached.

_____ _____ _____ _____

Plumbing Contractor Date General Contractor Date

_____ _____ _____ _____

Electrical Contractor Date

Prefunctional checklist items must be completed as part of startup & initial checkout, preparatory to functional testing.

- This checklist does not take the place of the manufacturer's recommended startup procedures or reports.
- Note items that do not apply with the reasons on this form (N/A = not applicable, BO = by others).
- If this form is not used for documenting prefunctional testing, one of similar rigor shall be used.
- Contractors assigned responsibility for sections of the checklist shall see that checklist items related to their subcontractors are completed and signed off.
- "Contr." column or abbreviations in brackets to the right of an item refer to the contractor responsible to verify completion of this item. A/E = architect/engineer, All = all contractors, GC = general contractor, PC = plumbing contractor, MC = mechanical contractor, CC = controls contractor, SM = sheet metal contractor, TAB = test and balance contractor, EC = electrical contractor, CA = commissioning agent.

Approvals. This filled-out checklist has been reviewed. Its completion is approved with the exceptions noted below.

_____ _____ _____ _____

Commissioning Agent Date Owner's Representative Date

2. Installation Checks

Check if Okay. Enter N/A if not applicable. Enter Note number if deficient.

Check Equip Tag->			Contr.
General Installation			
General appearance good, no apparent damage			
Site clean and ready for testing			
Equipment labels and tags affixed			
Required seismic restraints in place			
Insulating blanket installed (if necessary)			
Adequate combustion air supply provided (air supply is sized and located properly)			
Unit is protected from weather			
Unit is accessible and has manufacturer recommended clearances			
Flue			
Flue installed completely and sloped properly			
Flue is installed away from combustible materials			
Proper flue connection with draft diverter			
Proper flue termination, vent cap, and flashing			
Proper type flue – double wall penetration			
Piping immediately at unit. (Also see DHW Piping)			
Gas piping installed and tested (supply is at proper pressure)			
Piping complete, including safety relief valves.			
System flushed and sterilized. Strainers clean and installed			
Shutoff valves installed properly			
Heat Trap properly installed			
Dielectric connections installed correctly			
Drain pipe is properly terminated			
Smitty pan is properly installed (if required)			
Air vents and bleeds at high points of systems functional			
Electrical and Controls			
Electrical components grounded			
Sensors calibrated (see below)			
Control devices and wiring complete			
Shutoff devices and controls installed (if necessary)			
Flow switches installed as required (if necessary)			

Checklist items of Part 2 are all successfully completed for given trade… ___Yes ____No

3. Sensor and Actuator Calibration [Contr. = _____]

Field-installed temperature, CO, and pressure sensors and gages on this piece of equipment are calibrated. Test instruments NIST certified for calibration within the last 12 months: Y/N_____.

Sensors installed in the unit at the factory with NIST calibration certificates provided need not be field calibrated.

Sensor or Actuator & Location	Loc-ation OK	1st Gage Value	Instr. Meas'd Value	Final Gage Value	Pass Y/N?

Sensor or Actuator & Location	Loc-ation OK	1st Gage Value	Instr. Meas'd Value	Final Gage Value	Pass Y/N?

Gage reading = reading of the permanent gage on the equipment. Instr. = testing instrument. Visual = actual observation.

Sensors are calibrated within required tolerances … ____Yes ____No

-- END OF CHECKLIST --

Sample Prefunctional Checklist

Test & Air Balance (TAB), Review Checklist

Components Included: ____ Airside, ____ Waterside

The purpose of this checklist is to verify that necessary components for TAB have been included.

1. Submittals / Approvals

Submittal. The TAB Plan has been developed and reviewed against the checklist below.

This plan is submitted for approval, subject to the attached list of outstanding items yet to be completed.

_____ _____ _____ _____

TAB Contractor Date General Contractor Date

- The TAB Plan checklist does not take the place of the recommended formats or procedures in standards referenced in the specifications, but is intended to augment them.
- Items that do not apply shall be noted with the reasons on this form (N/A = not applicable, BO = by others).

Approvals. This filled-out checklist and the TAB Plan have been reviewed. Their completion is approved with the exceptions noted below.

_____ _____ _____ _____

Commissioning Agent Date Owner's Representative Date

2. TAB Plan Checklist

Check if included in Plan. Write N/A if not applicable. Enter Note number if deficient.

Check	Air Side	Chilled Water	Heating Water
Specified qualifications and certifications of parties performing TAB work were submitted			
TAB contractor has reviewed drawings, walked through the site and verified that there are sufficient balancing dampers, valves, isolation dampers and valves and test ports installed to perform TAB per spec. Deficiencies in design or installation that will adversely affect or preclude proper TAB have been reported.			
TAB contractor has reviewed the construction documents and the systems with the design engineers and contractors to sufficiently understand the design intent for each system and outlet.			
Prior to plan, TAB contractor met with controls contractor to become familiar with using the terminal unit programmer for TAB			
Field checkout sheets and logs provided as part of plan			
Proposed final test report sheets provided as part of plan			
Field and final test report sheets list each piece of equipment to be tested, adjusted and balanced with the data cells to be gathered for each			

Check	Air Side	Chilled Water	Heating Water
Discussion of what notations and markings will be made on the duct and piping drawings.			
List of airflows, waterflows, sound levels, system capacities and efficiency measurements to be performed, and a description of specific test procedures, parameters, formulas and test instrument type to be used for the measurements have been provided. Sample forms have been included.			
Detailed step-by-step procedures for TAB work: Terminal flow calibration (for each terminal type), diffuser proportioning, branch/sub-main proportioning, total flow calculations, rechecking, and others. Similar for water side.			
Details of how total flow will be determined (Air: Sum of terminal flows via BAS calibrated readings or via hood read of terminals, supply (SA) and return air (RA) pitot traverse, SA or RA flow stations. Water: pump curves, circuit setter, flow station, ultrasonic meter.)			
Specific procedures that will ensure (and which can be verified) that both air side and water side are operating at the lowest possible pressures and energy consumption.			
Outside air ventilation criteria under clearly understood by TAB contractor			
Details of if and how minimum outside air cfm will be verified and set and for what level (total bldg, zone, other.)			
Details of how building static and exhaust fan/relief damper capacity will be checked.		N/A	N/A
The identification and types of measurement instruments to be used and their most recent calibration date			
Proposed selection points for sound measurements			
Details of any TAB work to be done in phases, by floor, or of areas to be built out later			
Details regarding specified deferred or seasonal TAB work			
Details of specified false loading of systems to complete TAB work			
Details of exhaust fan balancing and capacity verifications, including required room pressure differentials.			
Plan for hand-written field technician logs of discrepancies, deficient or uncompleted work by others, contract interpretation requests and lists of completed tests (scope and frequency)			
Plan for formal progress reports (scope and frequency)			
Plan for formal deficiency reports (scope, frequency and distribution)			

Checklist items of Part 2 are successfully completed … ____Yes ____No

-- END OF CHECKLIST --

Sample Prefunctional Checklist

Terminal Units, Floor #:_____

Terminal Unit Type(s): _____

1. Submittals / Approvals

Submittal. The above equipment and systems integral to them are complete and ready for functional testing. The checklist items are complete and have been signed off by parties having direct knowledge of the event, as marked below, respective to each responsible contractor. This prefunctional checklist is submitted subject to an attached list of outstanding items yet to be completed. A Statement of Correction will be submitted upon completion of outstanding items.

___ List attached.

_____ _____ _____ _____

Mechanical Contractor Date Controls Contractor Date

_____ _____ _____ _____

Electrical Contractor Date Sheet Metal Contractor Date

_____ _____ _____ _____

TAB Contractor Date General Contractor Date

Prefunctional checklist items and correction lists must be completed as part of startup & initial checkout, preparatory to functional testing.

- This checklist does not take the place of the manufacturer's recommended checkout and startup procedures or report, rather it augments these procedures with project specific performance criteria.
- Items that do not apply shall be noted with the reasons on this form (N/A = not applicable, BO = by others).
- If this form is not used for documenting prefunctional testing, one of similar rigor shall be used.
- Contractors assigned responsibility for sections of the checklist shall also see that checklist items by their subcontractors are completed and signed off.
- "Contr." column or abbreviations in brackets to the right of an item refer to the contractor responsible to verify completion of this item. A/E = architect/engineer, All = all contractors, CA = commissioning agent, CC = controls contractor, EC = electrical contractor, GC = general contractor, MC = mechanical contractor, SC = sheet metal contractor, TAB = test and balance contractor.

Approvals. This filled-out checklist has been reviewed. Its completion is approved with the exceptions noted on the list below.

_____ _____ _____ _____

Commissioning Agent Date Owner's Representative Date

2. Installation Checks

Enter Terminal Unit (TU) ID#. Check each box if Ok. Enter N/A = not applicable; BO = By Others.

Cabinet and General Installation

1. Model correlated with equipment list. Tag or mark is present and correct.
2. Sound wrappings installed
3. Final filters installed and construction filters removed (if applicable)
4. Unit secured per manuf. recommendations, contract documents, and seismic requirements.
5. Sufficient clearance for servicing.

Ductwork

6. Duct joint sealant to this unit properly installed
7. Pressure leakage tests to this unit completed
8. Smooth, round, straight duct for at least 3 duct diameters before terminal unit inlet.

Electrical work and Controls

9. Sensors calibrated (see below)
10. Single Point Electronic Sensor Installation: 3-5 duct diameters of smooth straight duct or per manufacturer's recommendation
11. Velocity Pressure Sensor Installation: at least 2 duct diameters of smooth straight duct or per manufacturer's recommendation
12. Disconnect switch enclosed, meeting UL and NEC requirements?

TAB

13. Installation of system and balancing devices permitted air balancing work to be completed following specified NEBB or AABC procedures and contract documents.

Contr → TU ID#	1	2	3	4	5	6	7	8	9	10	11	12	13

Checklist items of Part 2 are successfully completed for given trade… ____Yes ____No

3. Sensor and Actuator Calibration [Contr. = _____]

Calibrate field-installed temperature, CO_2, pressure sensors and gages, and actuators for dampers and valves on this piece of equipment using the methods and tolerances given in the Calibration and Bypass Leakage Test Procedures document. Test instruments must have a NIST certified calibration within the last 12 months: Y/N_____.

Sensors installed in the unit at the factory with NIST calibration certification provided need not be field calibrated.

Sensor or Actuator & Location	Loc-ation OK	1st Gage or BAS Value	Instr. Meas'd Value	Final Gage or BAS Value	Pass Y/N?

Sensor or Actuator & Location	Loc-atio n OK	1st Gage or BAS Value	Instr. Meas'd Value	Final Gage or BAS Value	Pass Y/N?

Gauge reading = reading of the permanent gauge on the equipment. BAS = building automation system. Instr. = testing instrument. Visual = actual observation. The Contractor's own sensor check-out sheets may be used in lieu of the above, if the same recording fields are included and the referenced procedures are followed.

Sensors are calibrated within required tolerances … ____Yes ____No

-- END OF CHECKLIST --

Sample Prefunctional Checklist

Lighting System (and Controls), ____ Entire Blg, ____ Floor #

1. Submittals / Approvals

Submittal. The above equipment and systems integral to them are complete and ready for functional testing. The checklist items are complete and have been checked off only by parties having direct knowledge of the event, as marked below, respective to each responsible contractor. This prefunctional checklist is submitted for approval, subject to an attached list of outstanding items yet to be completed. A Statement of Correction will be submitted upon completion of any outstanding areas. None of the outstanding items preclude safe and reliable functional tests being performed.___ List attached.

_____ _____ _____ _____

Electrical Contractor Date General Contractor Date

Prefunctional checklist items are to be completed as part of startup & initial checkout, preparatory to functional testing.

- This checklist does not take the place of the manufacturer's recommended checkout and startup procedures or report.
- Items that do not apply shall be noted with the reasons on this form (N/A = not applicable, BO = by others).
- If this form is not used for documenting, one of similar rigor shall be used.
- Contractors assigned responsibility for sections of the checklist shall be responsible to see that checklist items by their subcontractors are completed and checked off.
- "Contr." column or abbreviations in brackets to the right of an item refer to the contractor responsible to verify completion of this item. A/E = architect/engineer, All = all contractors, CA = commissioning agent, CC = controls contractor, EC = electrical contractor, GC = general contractor.

Approvals. This filled-out checklist has been reviewed. Its completion is approved with the exceptions noted below.

_____ _____ _____ _____

Commissioning Agent Date Owner's Representative Date

2. Installation Checks

Check if Okay. Enter N/A if not applicable. Enter Note number if deficient (attach notes). Complete table for each room.

Check Rooms →					Contr.
Lighting fixtures and switches					
Light switches are located per plans					
Light switches are labeled with proper ID to match drawings or field changes					
Light switch is controlling the fixtures in the area indicated on design drawings					
Fixtures are properly supported for seismic zone					
Verify proper lamp type is installed in each fixture to match fixture schedule and specifications					
Lighting controls					
Lighting control is installed per manufacturer recommendations (attached recommendations to this checklist)					
Lighting control is calibrated per manufacturer checklist					

Check if Okay. Enter N/A if not applicable. Enter Note number if deficient (attach notes). Complete table for each room.

Check Rooms →					Contr.
Lighting fixtures and switches					
Light switches are located per plans					
Light switches are labeled with proper ID to match drawings or field changes					
Light switch is controlling the fixtures in the area indicated on design drawings					
Fixtures are properly supported for seismic zone					
Verify proper lamp type is installed in each fixture to match fixture schedule and specifications					
Lighting controls					
Lighting control is installed per manufacturer recommendations (attached recommendations to this checklist)					
Lighting control is calibrated per manufacturer checklist					

Check if Okay. Enter N/A if not applicable. Enter Note number if deficient (attach notes). Complete table for each room.

Check Rooms →					Contr.
Lighting fixtures and switches					
Light switches are located per plans					
Light switches are labeled with proper ID to match drawings or field changes					
Light switch is controlling the fixtures in the area indicated on design drawings					
Fixtures are properly supported for seismic zone					
Verify proper lamp type is installed in each fixture to match fixture schedule and specifications					
Lighting controls					
Lighting control is installed per manufacturer recommendations (attached recommendations to this checklist)					
Lighting control is calibrated per manufacturer checklist					

Check if Okay. Enter N/A if not applicable. Enter Note number if deficient (attach notes). Complete table for each room.

Check Rooms →					Contr.
Lighting fixtures and switches					
Light switches are located per plans					
Light switches are labeled with proper ID to match drawings or field changes					
Light switch is controlling the fixtures in the area indicated on design drawings					
Fixtures are properly supported for seismic zone					
Verify proper lamp type is installed in each fixture to match fixture schedule and specifications					
Lighting controls					
Lighting control is installed per manufacturer recommendations (attached recommendations to this checklist)					
Lighting control is calibrated per manufacturer checklist					

Checklist items of Part 2 are all successfully completed for given trade… ___Yes ____No

-- END OF CHECKLIST --

Sample Prefunctional Checklist

Piping (Dx Refrigeration)

Components Include: _____Piping, _____Dx coils, _____Condensing units, _____piping specialties

Associated Checklists: Packaged Rooftop AC Unit

1. Submittals / Approvals

Submittal. The above equipment and systems integral to them are complete and ready for functional testing. The checklist items are complete and have been checked off only by parties having direct knowledge of the event, as marked below, respective to each responsible contractor. This prefunctional checklist is submitted for approval, subject to an attached list of outstanding items yet to be completed. A Statement of Correction will be submitted upon completion of any outstanding areas. None of the outstanding items preclude safe and reliable functional tests being performed.___ List attached.

_____ Mechanical Contractor	_____ Date	_____ Controls Contractor	_____ Date
_____ Electrical Contractor	_____ Date	_____ Sheet Metal Contractor	_____ Date
_____ TAB Contractor	_____ Date	_____ General Contractor	_____ Date

Prefunctional checklist items are to be completed as part of startup & initial checkout, preparatory to functional testing.

- This checklist does not take the place of the manufacturer's recommended checkout and startup procedures or report.
- Items that do not apply shall be noted with the reasons on this form (N/A = not applicable, BO = by others).
- If this form is not used for documenting, one of similar rigor shall be used.
- Contractors assigned responsibility for sections of the checklist shall be responsible to see that checklist items by their subcontractors are completed and checked off.
- "Contr." column or abbreviations in brackets to the right of an item refer to the contractor responsible to verify completion of this item. A/E = architect/engineer, All = all contractors, CA = commissioning agent, CC = controls contractor, EC = electrical contractor, GC = general contractor, MC = mechanical contractor, SC = sheet metal contractor, TAB = test and balance contractor.

Approvals. This filled-out checklist has been reviewed. Its completion is approved with the exceptions noted below.

_____ Commissioning Agent	_____ Date	_____ Owner's Representative	_____ Date

2. Installation Checks

Check if Okay. Enter N/A if not applicable. Enter Note number if deficient.

Check		Contr.
Piping (line sets)		
Pipe fittings complete, properly supported, not kinked or trapped		
Pipes properly labeled		
Pipes properly insulated		
Piping properly weather protected		
Dx specialties in place and clean		
Isolation valves installed		
Test ports (P/T) installed		
Piping pressure tested according to contract documents (report attached)		
Pipe penetrations properly sealed		
No leaking apparent around fittings		
Valves (except coil valve. Coil Valve checklists are with the unit checklist)		
Valve labels permanently affixed		
Valves installed in proper direction		
No leaks		
Pressure relief valves tested		
Refrigerant fully charged		
Valves that require a positive shut-off are verified to not be leaking when closed at normal operating pressure. List: _____ __		
Sensors and Gages		
Temperature, pressure and flow gages and sensors installed		

Checklist items of Part 2 are all successfully completed for given trade… ____Yes ____No

-- END OF CHECKLIST --

Sample Prefunctional Checklist

Piping (Condensate)

Associated Checklists: Packaged Rooftop AC Units

1. Submittals / Approvals

Submittal. The above equipment and systems integral to them are complete and ready for functional testing. The checklist items are complete and have been checked off only by parties having direct knowledge of the event, as marked below, respective to each responsible contractor. This prefunctional checklist is submitted for approval, subject to an attached list of outstanding items yet to be completed. A Statement of Correction will be submitted upon completion of any outstanding areas. None of the outstanding items preclude safe and reliable functional tests being performed.___ List attached.

_____ _____ _____ _____

Plumbing Contractor Date General Contractor Date

_____ _____ _____ _____

Mechanical Contractor Date

Prefunctional checklist items are to be completed as part of startup & initial checkout, preparatory to functional testing.

- This checklist does not take the place of the manufacturer's recommended checkout and startup procedures or report.
- Items that do not apply shall be noted with the reasons on this form (N/A = not applicable, BO = by others).
- If this form is not used for documenting, one of similar rigor shall be used.
- Contractors assigned responsibility for sections of the checklist shall be responsible to see that checklist items by their subcontractors are completed and checked off.
- "Contr." column or abbreviations in brackets to the right of an item refer to the contractor responsible to verify completion of this item. A/E = architect/engineer, All = all contractors, GC = general contractor, PC = plumbing contractor, MC = mechanical contractor, CC = controls contractor, TAB = test and balance contractor, EC = electrical contractor, CA = commissioning agent.

Approvals. This filled-out checklist has been reviewed. Its completion is approved with the exceptions noted below.

_____ _____ _____ _____

Commissioning Agent Date Owner's Representative Date

2. Installation Checks

Check if Okay. Enter N/A if not applicable. Enter Note number if deficient.

Check		Contr.
Piping		
Pipe fittings complete and pipes properly supported allowing for thermal expansion and contraction and building expansion joints.		
Pipe joints properly installed		
Required seismic anchoring installed		
Pipes properly labeled		
Pipes properly insulated		
Pipes properly sloped		
Trap and vent properly installed		
No leaking apparent around fittings		
Proper primary drain termination		
Proper secondary drain termination		
Plastic pipe exposed on roof		
Fire rated penetration properly sealed		

Checklist items of Part 2 are all successfully completed for given trade ____Yes ____No

-- END OF CHECKLIST --

Sample Prefunctional Checklist

Piping (Domestic Water)

Associated Checklists: Domestic Hot Water Heater(s)

1. Submittals / Approvals

Submittal. The above equipment and systems integral to them are complete and ready for functional testing. The checklist items are complete and have been checked off only by parties having direct knowledge of the event, as marked below, respective to each responsible contractor. This prefunctional checklist is submitted for approval, subject to an attached list of outstanding items yet to be completed. A Statement of Correction will be submitted upon completion of any outstanding areas. None of the outstanding items preclude safe and reliable functional tests being performed.___ List attached.

_____ _____ _____ _____

Plumbing Contractor Date General Contractor Date

Prefunctional checklist items are to be completed as part of startup & initial checkout, preparatory to functional testing.

- This checklist does not take the place of the manufacturer's recommended checkout and startup procedures or report.
- Items that do not apply shall be noted with the reasons on this form (N/A = not applicable, BO = by others).
- If this form is not used for documenting, one of similar rigor shall be used.
- Contractors assigned responsibility for sections of the checklist shall be responsible to see that checklist items by their subcontractors are completed and checked off.
- "Contr." column or abbreviations in brackets to the right of an item refer to the contractor responsible to verify completion of this item. A/E = architect/engineer, All = all contractors, GC = general contractor, PC = plumbing contractor, MC = mechanical contractor, CC = controls contractor, TAB = test and balance contractor, EC = electrical contractor, CA = commissioning agent.

Approvals. This filled-out checklist has been reviewed. Its completion is approved with the exceptions noted below.

_____ _____ _____ _____

Commissioning Agent Date Owner's Representative Date

2. Installation Checks

Check if Okay. Enter N/A if not applicable. Enter Note number if deficient.

Check		Contr.
Piping		
Pipe fittings complete and pipes properly supported allowing for thermal expansion and contraction and building expansion joints.		
Pipe joints properly installed		
Required seismic anchoring installed		
Pipes properly labeled		
Pipes properly insulated		
Piping properly sloped		
Proper construction isolation		
Strainers in place and clean		
Isolation valves and balancing valves installed		
Test ports (P/T) installed near all control sensors and as per spec		
Piping system properly flushed and cleaned and temporary piping removed (report attached)		
10% of strainers and Owner-selected low-point drains opened and witnessed by Owner to be clean. (List points checked below).		
Piping hydrostatic pressure test completed according to contract documents (report attached)		
No leaking apparent around fittings		
ASME pressure vessel data sheet or certification tag posted and inspection complete for each expansion tank and storage tank		
Expansion tanks verified to not be air bound and system completely full of water. System purged of air.		
Air vents and bleeds at high points of systems functional		
Water hammer arrestors installed and tested		
Backflow preventer proper location		
Adequate depth of bury for service piping		
Cross connection protection		
Valves		
Valve tags permanently affixed		
Valves installed in proper direction		
Pressure reducing valves set at proper pressure		
No leaks		
Flexible connections at equipment installed		
Dielectric fittings for dissimilar metals installed		
Vibration Isolation installed		
Fire-rated pipe penetrations installed properly		

Check		Contr.
Valves that require a positive shut-off are verified to not be leaking when closed at normal operating pressure. List: _____		
Sensors and Gages		
Temperature, pressure and flow gages and sensors installed. List : _____ _____		
TAB		
Installation of system and balancing devices allowed balancing to be completed following specified NEBB or AABC procedures and contract documents		

Checklist items of Part 2 are all successfully completed for given trade… ____Yes ____No

-- END OF CHECKLIST –

Prefunctional Checklist

Ductwork

Associated Checklists: Rooftop Packaged Unit

1. Submittals / Approvals

Submittal. The above equipment is complete and ready for functional testing. The checklist items are complete and have been checked off only by parties having direct knowledge of the event, as marked below, respective to each responsible contractor. This prefunctional checklist is submitted for approval, subject to an attached list of outstanding items yet to be completed. None of the outstanding items preclude safe and reliable functional tests being performed.

___ List attached.

_____	_____	_____	_____
Mechanical Contractor	Date	Sheet Metal Contractor	Date
_____	_____	_____	_____
General Contractor	Date	Electrical Contractor	Date

Prefunctional checklist items are to be completed as part of startup & initial checkout, preparatory to functional testing.

- "Contr." column or abbreviations in brackets to the right of an item refer to the contractor responsible to verify completion of this item. A/E = architect/engineer, All = all contractors, CA = commissioning agent, CC = controls contractor, EC = electrical contractor, GC = general contractor, MC = mechanical contractor, SC = sheet metal contractor, TAB = test and balance contractor.

Approvals. This filled-out checklist has been reviewed. Its completion is approved with the exceptions noted below.

_____	_____	_____	_____
Commissioning Agent	Date	Owner's Representative	Date

2. Installation Checks

Check if Okay. Enter N/A if not applicable. Enter Note number if deficient.

Check Run to/from →					Contr.
Ducts					
Sound attenuators installed					
Duct joints properly installed and sealed					
No apparent severe duct restrictions					
Turning vanes in square elbows as per drawings					
OSA intakes located away from pollutant sources & exhaust outlets					
Pressure leakage tests completed					
Branch duct control dampers operable					
Ducts clean					
Balancing dampers installed as per drawings					
Proper roof penetration curbs and flashing					
Fire-rated penetrations, fire/smoke dampers properly located					
Ducts insulated or lined per drawings					
Ductwork and plenums are clean and free of construction debris					
TAB (Test, adjust, air balance)					
Terminal units/Diffusers, registers, grilles are adjusted for air flow quantity and direction					

Checklist items of Part 2 are all successfully completed for given trade… ____Yes ____No

-- END OF CHECKLIST --

SECTION 01820
OPERATIONS AND MAINTENANCE TRAINING

1.1 THE REQUIREMENT

A. General:

1. This section covers the development and implementation of training programs that will identify skills and knowledge necessary to operate and maintain the Project Facilities safely and efficiently.

2. The CONTRACTOR shall furnish all tools, equipment, materials, and supplies, and shall perform all functions and services required to complete the Work as specified herein. With the exception of safety and overview training, training shall be divided into separate categories for operations training and maintenance training with maintenance training further broken down to specific crafts.

3. The training requirements specified in other Sections of the Specifications shall be in addition to those specified in this Section.

4. No actual operations training of a piece of equipment will be permitted until the equipment is properly installed and is operational.

5. Operations training shall be a prerequisite to the beneficial use of the facility or any portion thereof and be completed a minimum of one week prior to the beneficial use of the Project Facilities. Maintenance training shall occur after and within thirty (30) days of the beneficial use of the facility.

B. Related Work Specified Elsewhere:

1. LIQUIDATED DAMAGES of the GENERAL CONDITIONS.

2. SUBMITTALS of the GENERAL REQUIREMENTS.

3. CONTRACTOR'S CONSTRUCTION SCHEDULE AND REPORTS of the GENERAL REQUIREMENTS.

4. DIVISIONS 11, 16, and 17 as applicable.

C. Training Scope:

1. Manufacturer/Vendor Training:

a. Manufacturer supplied (VENDOR) equipment training for all major plant equipment and subsystems shall be provided for the Operations and Maintenance groups as outlined in this section. The VENDOR training shall be provided by qualified instructors of the equipment manufacturers, i.e.: equipment field startup technician or their representative, as approved by the ENGINEER and may include both on and off-site training venues. Generally, manufacturer sales representatives will not be acceptable.

b. Classroom training shall be structured to develop a basic understanding of the design, function and capabilities of the equipment and the interrelationship with the process. In addition, routine operational and

preventive maintenance, safety considerations, responses to abnormalities and startup, shutdown and troubleshooting will be covered.

c. Field training shall be scheduled to commence immediately following the classroom training and shall stress hands-on, performance-based application of the classroom training. Equipment shall be started, and relevant systems and components shall be demonstrated.

d. Off-site training, primarily for the technical crafts including Electricians, Instrument Technicians and Mechanics, shall focus on specialized, technical training and shall be provided by the manufacturer at their factory or training facility. In the event the CITY requests specialized factory training on a particular piece of plant equipment, the contractor shall make arrangements with the applicable equipment manufacturer to provide such training.

2. Process Overview, Operations and Safety Training:

a. Process overview and safety training for the Operations group, if deemed necessary, will be prepared and conducted by the CITY utilizing approved material supplied by the equipment vendors. In the event the CITY is unable to provide the process training, the CONTRACTOR shall enter into an agreement with a training specialist approved by the ENGINEER. All work performed by the training specialist will be paid as stated in Paragraph I, "Fixed Cash Allowance," herein. The CONTRACTOR shall submit invoices for payment from the training specialist, which have been previously approved by the ENGINEER and paid by the CONTRACTOR.

3. General:

a. Training Material: Sections of the manufacturers' O&M manuals, selected by the CITY for the installed equipment, shall be used as classroom training material. The CONTRACTOR shall then reproduce the selected text for each piece of plant equipment and compile the training material to be used in the classroom by the manufacturer's field technician.

b. Training schedule: The CONTRACTOR shall provide an operation and maintenance training schedule to be conducted immediately following vendor equipment startup of the equipment. All training shall be scheduled for Tuesday through Thursday only.

D. Training Requirements:

1. The technical position titles of trainees for the Operational and Maintenance groups are listed below:

a. Operations Group:
   (1) Shift Superintendents and Process Control Engineers.

b. Maintenance Group:
   (1) Mechanics/Plumbers.
   (2) Electricians.
   (3) Instrument Technicians.

2. Major equipment and plant subsystems for the various crafts which require training include, but are not limited to the following:

a. Instrumentation and Controls (I&C):
   (1) Programmable Logic Controllers (PLC).
   (2) Local Control Panels (LCP).
   (3) Loop Descriptions and Drawings.
   (4) Instrument Installation and Calibration.
b. Electrical Systems:
   (1) Motor Control Centers (MCC).
   (2) High and Low Voltage Systems.
   (3) Wiring Diagrams/Schematics.
   (4) Lighting and Power Panels.
   (5) Starters and Controllers.
c. Operating Systems:
   (1) Pumps.
   (2) Blowers and Fans.
   (3) Local and Remote-Control Devices.
d. Mechanical:
   (1) Pumps, Couplings & Drives.
   (2) Lubrication.

E. Operation Training:

1. The VENDOR shall conduct 2 courses as described herein for the General Operations Group. Each course shall consist of both classroom and field training as specified herein. Each class size shall consist of 8 trainees. The courses shall not be conducted concurrently.

2. The classroom training shall consist of 20 hours of instruction and include, but not be limited to, the following subjects. This training shall be conducted by qualified representatives of the equipment manufacturers.

   a. Safety precautions and procedures - 4 Hours.

   b. Equipment description and function - 4 Hours.

   c. Operating procedure - 4 Hours.

   d. Operational Maintenance - 4 Hours.

   e. Emergency procedures - 4 Hours.

F. Maintenance Training:

1. The maintenance training shall include the function, adjustment, repair, and replacement of all components related to the trainee's trade. Emphasis shall be placed on those areas listed in item number 3, below. Safety aspects shall also be stressed.

2. The field training shall stress hands-on instruction.

3. The training shall include, but not be limited to, the following:

a. Preventive and corrective maintenance procedures, including replacement of parts; lubrication quantities, types, frequencies, and application points; and an estimate of time to perform such procedures.
b. Special tools, techniques, or procedures required for either preventive or corrective maintenance of equipment, or its auxiliary or support systems.
c. Procedures to perform adjustments required for alignment, wear and calibration for all preventive and corrective maintenance, and an estimate of time required to perform such procedures.
d. Assembly and disassembly procedures, including parts lists required for appropriate preventive and/or corrective maintenance. Models, "exploded" views, and/or audiovisual materials shall be used for this training. These materials shall be turned over to the ENGINEER upon completion of training. Hands-on field training shall be provided, subject to the approval of the ENGINEER.
e. Maintenance, overhauls, troubleshooting of equipment, and auxiliary or support systems.

4. Maintenance training shall be conducted as described in the following subsections.

a. Mechanic Training:
(1) Conduct 16 hours of both classroom and field training for the Mechanics Group. The class size consist of 8 trainees.
(2) The training shall consist of 20 hours of instruction, including but not limited to, the following topics for each major equipment system:
(a) Equipment Description and Function 4 Hours.
(b) Corrective and Preventive Maintenance Procedures 4 Hours.
(c) Disassembly and Assembly 4 Hours.
(d) Spare Parts 4 Hours.
(e) Troubleshooting 4 Hours.
(3) The field training shall consist of 24 hours of hands-on instruction.
b. Electrician Training:
(1) Conduct 16 hours of both classroom and field training for the Electrician Group. The class size will consist of 6 trainees.
(2) The classroom training shall consist of 12 hours of instruction, including but not limited to, the following:
(a) High and Low voltage Systems 4 hours.
(b) Motor Control Centers 4 hours.
(c) Control Panel Wiring Diagrams/Schematics 4 Hours.
(3) The field training shall consist of 12 hours of hands-on instruction.
c. Instrument Technician Training:
(1) Conduct 16 hours of both classroom and field training for the Instrument Technicians Group. The class size will consist of 6 trainees.
(2) The classroom training shall consist of 20 hours of instruction, including but not limited to, the following subjects:
(a) PLC and/or DCS 4 Hours.
(b) Loop and PID Drawings, Schematics 4 hours.
(c) Programming 4 hours.
(d) Variable Frequency Drives (VFD) 4 hours.

(e) Operator Interface 4 hours.

(3) The field training shall consist of 16 hours of hands-on instruction.

G. Execution:

1. The training specified herein shall be provided at the MacArthur Lake Park, or other facility designated by the CITY. The CITY will make available one room for the training.

2. Due to limitations of plant manpower available for dedicated training purposes, no more than one group course shall be taught at a time for any individual trade discipline.

3. Training shall be conducted so that home study will not be required. The training shall include courses, which combine classroom and field hands-on training that is structured and scheduled to facilitate trainee comprehension of the subject material. Courses shall be continuous, and the field training shall immediately follow the classroom instruction.

4. The CITY reserves the right to videotape any and all training materials and presentations, except for proprietary material, and retain all rights for usage of such recorded material to train CITY personnel.

H. Evaluation:

1. All training sessions will be monitored and approved by the ENGINEER. Any session or portion thereof deemed unsatisfactory, based on evaluation of the training, shall be repeated by the manufacturer or manufacturer's representative at no additional cost to the CITY.

2. When deemed appropriate by the ENGINEER, field instruction to CITY personnel designated to receive training may be acceptable as a training session. The instruction shall be provided by a field service technician qualified to perform corrective or preventive maintenance, troubleshooting, or related field services.

I. Submittals:

1. The CONTRACTOR shall submit training packages for the ENGINEER'S review and approval. The training submittal shall be tied into the CONTRACTOR'S overall submittal process.

2. The CONTRACTOR shall provide the training submittals in the following order for review and approval by the ENGINEER.

a. First draft sixty (60) days prior to proposed instruction date.
b. Final draft thirty (30) days prior to proposed instruction date.

3. The "first draft" of the training material shall, as a minimum, contain the following:

a. Instructional text that details the specific topics of training for the system. These topics are detailed previously in the training submittal. All text must be complete. Incomplete sections, paragraphs, etc., shall not be acceptable.

b. Clean legible photocopies of all overhead transparencies to be used in the delivery of the lesson plan.
c. Slides, videos (Digital Media), and any other type of visual training aid that will be used in conjunction with the training plan.
d. Reference materials as detailed in the lesson plan (e.g., handout, manufacturer catalogues, brochures, and pamphlets). All material shall be reviewed by the ENGINEER to determine applicability and functionality. Reference materials that do not pass this review shall be modified and resubmitted within two weeks for approval.
e. No actual classroom or field training shall be scheduled unless this material is approved.
f. The CONTRACTOR shall not proceed to the "final draft" stage of training material until the ENGINEER has approved the "first draft".

4. With the final draft of the training material, the CONTRACTOR shall submit a Training Agenda that provides the following information:

a. Company name, address, and telephone number(s) for the vendor.
b. Name and telephone number(s) of the vendor training representative.
c. Duration of class (total hours).
d. Breakdown of class and duration in hours of each training activity.
e. Target audience (e.g., operators, maintenance personnel etc.).
f. Audiovisual requirements (i.e., slide projector, television, VCR, overhead projector, etc.).

5. After the CONTRACTOR has received approval of the "final draft" of the training material and the training agenda from the ENGINEER, only then can the actual training be scheduled. CONTRACTOR shall submit his proposed training schedule to the ENGINEER for approval. The proposed training schedule shall be submitted a minimum of sixty (60) calendar days prior to the start of the training. If the proposed training schedule is approved, then it becomes the final training schedule.

6. Any compensation that is paid to CITY personnel as a result of class cancellations of classes that begin more than thirty (30) minutes after the scheduled start time shall be reimbursed to the CITY by the CONTRACTOR. An exception is when a class is canceled or delayed due to actions by the CITY. The ENGINEER, or his/her representative, will monitor the starting times of scheduled classes.

7. The review of the training material does not constitute its approval unless specifically stated so. The training material submittal shall contain, but not be limited to, the following:

a. Sufficient background information on each instructor for various sessions shall be provided to allow evaluation of the proposed instructor's qualifications and his capability of training the specific discipline.
b. At the completion of the training, the CONTRACTOR shall forward to the ENGINEER three (3) complete sets of training materials and support material for each defined training category. This forwarding of materials is to take place at a close-out meeting between the CONTRACTOR and the ENGINEER.

8. Failure to submit training schedule or changes made to the final training schedule, that are not due to actions by the CITY, shall subject the CONTRACTOR to liquidated damages. Liquidated damages shall be assessed at the rate of $500 per day should the CONTRACTOR fail to meet the schedule's submittal requirements.

END OF SECTION

THIS PAGE INTENTIONALLY LEFT BLANK

BUREAU OF ENGINEERING

MACARTHUR LAKE
STORMWATER CAPTURE PROJECT
WORK ORDER NO. S33WMLRP, S343MSWC, S043MSWC

TECHNICAL SPECIFICATIONS

JANUARY 2026
100% DESIGN SUBMITTAL

City of Los Angeles
California

Department of Public Works
Bureau of Engineering

ENGINEERING
CITY OF LOS ANGELES

THIS PAGE INTENTIONALLY LEFT BLANK

TABLE OF CONTENTS

DIVISION 02 - SITE WORK

02210 CLEARING, GRUBBING AND STRIPPING
02220 SITE DEMOLITION
02235 DEWATERING
02240 SHEETING, SHORING, AND BRACING SYSTEMS
02310 EARTHWORK
02433 BACKFILL GROUTING
02445 ACCESS PIT EXCAVATION SUPPORT SYSTEMS
02446 SHAFT EXCAVATION SUPPORT
02455 CAST-IN-PLACE DRILLED PILES
02480 STEEL SHEET PILES
02501 MAINTENANCE AND SUPPORT OF UTILITIES
02515 WATER PIPELINE TESTING
02525 SANITARY SEWER SYSTEM TESTING
02545 STORM DRAIN SYSTEM
02585 MAINTENANCE HOLE AND PRECAST VAULT CONSTRUCTION
02666 HIGH DENSITY POLYETHYLENE GEOMEMBRANE LINERS
02710 YARD WORK AND STREET WORK
02810 IRRIGATION SYSTEM
02820 SLIDING GATES AND OPERATORS
02839 PREFABRICATED HALF THROUGH TRUSS PEDESTRIAN BRIDGE
02900 LANDSCAPING
02930 LANDSCAPE MAINTENANCE
02939 PLANT PROTECTION AND PRUNING
02955 RESTORATION OF UNDERGROUND PIPING

DIVISION 03 - CONCRETE

03100 CONCRETE FORMWORK
03200 REINFORCEMENT STEEL
03250 CONCRETE ACCESSORIES
03290 JOINTS IN CONCRETE
03300 CAST-IN-PLACE CONCRETE
03315 GROUT
03370 CONCRETE CURING
03400 PRECAST CONCRETE

DIVISION 05 - METALS

05120 STRUCTURAL STEEL
05300 METAL DECK
05500 METAL FABRICATIONS

DIVISION 06 - WOOD, PLASTICS, AND COMPOSITES

06100 ROUGH CARPENTRY

DIVISION 07 - THERMAL AND MOISTURE PROTECTION

07900 JOINT SEALANTS
07920 CAULKING AND SEALANTS

DIVISION 09 - FINISHES

09800 PROTECTIVE COATING

DIVISION 11 - EQUIPMENT

11000 EQUIPMENT GENERAL PROVISIONS
11300 PUMPS, GENERAL
11310 VARIABLE SPEED DRIVES, GENERAL
11430 VERTICAL TURBINE PUMPS
11510 SUBMERSIBLE NON-CLOG PUMPS
11820 SLIDE GATES

DIVISION 13 - SPECIAL CONSTRUCTION

13470 TEMPORARY ODOR CONTROL SYSTEMS

DIVISION 15 - MECHANICAL

15050 BASIC MECHANICAL MATERIALS AND METHODS
15119 ELECTRIC MOTOR ACTUATORS FOR VALVES AND SLIDE GATES
15270 MECHANICAL SYSTEMS COMMISSIONING
15280 MECHANICAL TESTING REQUIREMENTS
15320 ELECTRICAL REQUIREMENTS FOR MECHANICAL EQUIPMENT
15340 HANGERS AND SUPPORTS
15360 METERS AND GAGES
15610 PIPING, GENERAL
15615 VALVES, GENERAL
15620 PIPE SYSTEM TESTING
15640 POLYVINYL CHLORIDE (PVC) PIPE, FITTINGS, AND VALVES
15700 DUCTILE IRON PIPE, FITTINGS, AND VALVES
15720 STEEL PIPE - FABRICATED SPECIALS
15770 PIPE SUPPORTS AND MECHANICAL JOINT RESTRAINTS
15780 PIPING IDENTIFICATION SYSTEMS
15830 MISCELLANEOUS VALVES

DIVISION 16 - ELECTRICAL

16020 MUNICIPAL FACILITIES GENERAL ELECTRICAL REQUIREMENTS
16100 BASIC MATERIALS AND METHODS
16110 CONDUITS AND RACEWAYS
16150 CONDUCTORS, 600 VOLTS AND BELOW
16170 CABINETS AND RACKS
16180 WIRING DEVICES
16190 ELECTRICAL IDENTIFICATION

16200 MOTOR CONTROL CENTERS
16210 SWITCHES, DISCONNECT AND SAFETY
16280 SHORT CIRCUIT AND COORDINATION REPORT
16290 MUNICIPAL FACILITIES GROUNDING SYSTEMS
16310 VARIABLE FREQUENCY DRIVE UNITS
16330 PANELBOARDS
16340 LOW VOLTAGE MOTOR CONTROL
16380 MUNICIPAL FACILITIES UNINTERRUPTIBLE POWER SYSTEM
16490 ELECTRIC MOTORS
16560 MUNICIPAL FACILITIES ELECTRICAL SYSTEMS COMMISSIONING
16570 MUNICIPAL FACILITIES ELECTRICAL TESTING REQUIREMENTS

DIVISION 17 - INSTRUMENTATION

17100 METERS, GENERAL
17160 MAGNETIC FLOW METERS
17240 AREA-VELOCITY FLOW METERS
17400 PROCESS INSTRUMENTATION AND CONTROL
17450 SCADA NETWORK AND COMMUNICATIONS

THIS PAGE INTENTIONALLY LEFT BLANK

SECTION 02210
CLEARING, GRUBBING AND STRIPPING

PART ONE - GENERAL

1.1 DESCRIPTION

A. All site clearing and grubbing on the job-site indicated on the Contract Drawings and in the Project Manual.

B. Site clearing shall consist of removing all vegetable growth such as trees, roots, stumps, shrubs, brush, limbs; and stone, boulders, clods, wood and other vegetative growth from the growth surface. Clearing shall also include the removal and disposal of trash piles, rubbish, etc.

C. Grubbing shall consist of the removal and disposal of wood roots, stumps, shrubs, brush, stone, boulders, clods, vegetable growth, etc. below the ground or subgrade surface.

D. CONTRACTOR shall furnish all tools, equipment materials and supplies and shall perform all labor to complete the work associated with removal of all natural and artificial objectionable material from the designated areas of work as indicated in the Contract Documents.

E. This work shall also include the protection from injury and preservation of existing improvements, adjacent property, utility vegetation and existing objects designated to remain.

F. Prior to commencing the work, obtain acceptance from the ENGINEER regarding methods to be used and disposal of removed materials.

G. Related Sections:

1. Documents affecting work of this Section included, but are not necessarily limited to the GENERAL CONDITIONS, SUPPLEMENTARY CONDITIONS, DIVISION 1 - GENERAL REQUIREMENTS and other Sections of the Project Manual.

2. Site Demolition in Section 02220.

3. Earthwork in Section 02310.

4. Irrigation System in Section 02810.

5. Concrete work in Section 03300.

1.2 QUALITY ASSURANCE

A. Labor: Use adequate numbers of skilled laborers thoroughly trained in site-clearing operations and experienced in the necessary crafts and completely familiar with the specified requirements and methods needed for the proper performance of the work of this Section.

B. Codes and Regulations: Perform all work of this Section in strict accordance with applicable Government Codes and Regulations especially meeting all safety standards and requirements of CAL/OSHA, County and 2025 Los Angeles City Building Code and

applicable Amendments. Conform to all storm water pollution control measures as required and provided in Section 02310 - EARTHWORK of the Project Manual. Provide additional measures, added materials and devices as may be needed as directed by the City Engineer or the Consultant at no added cost to the City.

C. Miscellaneous Requirements:

1. Erection and maintenance of protections.

2. Dust Control.

3. Repair of Damages.

4. Cleaning and Removal of Rubbish.

D. Permits and Licenses: Procure all City, County and State Permits and Licenses, including Municipal Business License and pay all charges and fees for the same.

E. Contractor Submittals - Submit schedule of clearing, grubbing, and erosion control measures to be put in place for all work scheduled during the rainy season (October - April).

PART TWO - PRODUCTS

2.1 MATERIALS

A. Soil Sterilant: As specified in Section 02310 - EARTHWORK.

B. Soil Treatment for Termite Control: As specified in Section 02310 – EARTHWORK.

C. Provide Materials not specifically described but required for completion of the work of this Section as selected by the Contractor subject to the approval of the City Engineer or the Consultant.

PART THREE - EXECUTION

3.1 SITE CONDITIONS

Examine the job-site and conditions under which work of this Section will be performed. Correct conditions detrimental to timely and proper site-clearing operations, as directed by the City Engineer or the Consultant. Do not proceed until such detrimental conditions have been corrected.

3.2 PROTECTION

A. Protect Existing Structures and Site Improvements indicated to remain from damage by approved methods and/or as authorized by the City Engineer. Removal of all protections shall be when work of this Section is completed or when so authorized by the City Engineer or the Consultant. Apply protections to adjacent properties as required and directed by the City Engineer.

B. Protect Existing Utilities Indicated or made known to remain traversing the job-site and serving existing adjacent facilities.

C. Protect Existing Trees and Shrubs Indicated to remain by providing temporary surrounding fencing so located a sufficient distance away so that trees and shrubs will not be damaged by site-clearing operations.

D. Protection of Persons and Property (existing structures and site improvements).

1. Provide barricades, warning signs at open depressions and holes on adjacent property and public accesses.

2. Provide operating warning lights during hours from dusk to dawn each day or as otherwise required.

3. Protect existing remaining structures, utilities, sidewalks, pavements other facilities from damage as caused by settlement, undermining, washout or other hazards created by site-clearing operations of this Section.

4. Provide and maintain pedestrian and vehicular access in accordance with Work Area Traffic Control Handbook (WATCH), latest edition.

E. Use means necessary to prevent air pollution or dust from becoming a nuisance to the public, to neighbors and to others performing work on or near the job-site. Comply with governing regulations.

F. Maintain access to the job-site, other neighboring property, street and alley at all times.

G. The project site shall be maintained in conformance with Section 7-8 - PROJECT SITE MAINTENANCE of the Standard Specifications for Public Works Construction (SSPWC) and the requirements of this Project Manual.

3.3 SITE CLEARING AND GRUBBING

A. General:

1. For drawing clarity, not all trees, shrubs, brush, grass, weeds, or exact amount of trash or debris are shown on the drawings. Contractor shall carefully study the Contract Drawings, the Soil Investigation Report and the Survey, visit the job site and verify the extent of the work to be done prior to the Bid.

2. Prior to starting job-site clearing operations in the company of the City Engineer or Consultant Architect, Soil Engineer and Inspector; visit the job site and verify the extent of the work.

3. Site clearing and grubbing shall conform to Section 300-1 - CLEARING AND GRUBBING of SSPWC and applicable requirements of the Project Manual.

4. Site clearing and grubbing shall be done in the presence of the Soil Engineer. Contractor shall notify the City Engineer 72 hours prior to clearing operation.

B. Site Clearing and Grubbing Operations:

1. To a depth of at least 1.5 feet below existing ground surfaces. Clean out all vegetable growth, roots, stomps, clods and other objective materials.

2. Treat roots remaining in the soil with a weed killer approved and as directed by the City Engineer or the Consultant.

3. Remove all concrete and masonry debris. Remove stones, boulders, clods which are one (1) inch or larger. Remove stones, boulders, clods which are one (1) inch or larger from all utility trenches.

4. Remove all existing rubbish and debris or those resulting from work operations of this Section as soon as possible, do not allow to pile up. Do not burn rubbish and debris on the job-site.

5. Remove all growths including trees and shrubs on the job-site within property lines including trees in tree wells and elsewhere as noted on the Contract Drawings.

6. Where active utility lines need to be capped or plugged, perform such work in accordance with requirements of the Utility Company or government agency having jurisdiction and conform to provisions of Section 01140 – CONTRACTOR'S USE OF THE PREMISES, and Subsection 3.2B of this Section.

3.4 STRIPPING

A. Stripping shall include the removal and disposal of all organic sod, topsoil, grass and grass roots, and other objectionable material remaining after clearing and grubbing from the areas designated to be stripped. The depth of stripping shall be as shown on the Drawings and specified herein.

B. Topsoil from the strippings shall be stockpiled and used for the finished site grading. Excess topsoil will be placed in the waste disposal areas designated by the ENGINEER.

C. Prior to beginning any excavation or fill, strip the topsoil to a depth of 12 inches and stockpile for future use. In general, topsoil shall be removed where structures are to be built, trenches dug, and roads, parking lots, walks, and similar improvements constructed within the areas presently covered with topsoil. Topsoil shall be stored clear of the construction area. Take reasonable care to prevent the topsoil from becoming mixed with subsoil. In lieu of reusing stockpile, use imported topsoil as required for final grading where soil not indicated on drawings.

3.5 TOPSOIL

A. Strip and remove existing sod, and stock-pile existing sod if specified for reuse in the Contract Works.

B. After proposed planting area(s) has been cleared of vegetation and grubbed, strip the existing topsoil to a depth specified and to provide at least a 6-inch depth of topsoil in areas shown on the Contract Drawings to be turfed or planted and to fill planters without contamination with subsoils.

C. If on site topsoil is specified for reuse, stock pile topsoil in an area clear of new construction or where directed by the City Engineer or the Consultant.

D. Maintain topsoil stockpiles in a manner which will not obstruct the natural flow of drainage.

1. Maintain the stockpiled topsoil free from debris and trash.

2. Keep the stockpiled topsoil damp to prevent drying out and creating a dusts source.

3. Soil samples shall be obtained and analyzed for agricultural suitability and fertility.

4. Place and compact backfill in the planting area. Add soil amendments to topsoil in accordance with the recommendation and cultivate.

5. Provide Soil Sterilization in accordance with Section 02310 – EARTHWORK of the Project Manual.

D**.** Remove and dispose of the stock pile topsoil prior to the delivery of any new imported top soil.

3.6 REMOVAL AND DISPOSAL OF CLEARING AND GRUBBING DEBRIS

A. General: All materials removed shall be disposed of outside of the right-of-way. No accumulation of flammable material shall remain on or adjacent to the right-of-way. The roadway and adjacent areas shall be left with a neat and finished appearance.

B. Bituminous Pavement: Bituminous pavement removal shall be in conformance with SSPWC Section 300-1.3.2.

C. Concrete Pavement: Concrete pavement removal shall be in conformance with SSPWC Section 300-1.3.2.

D. Concrete Curb, Walk, Gutters, Cross Gutters, Driveways, and Alley Intersections: Concrete removal shall be in conformance with SSPWC Section 300-1.3.2.

3.7 STORAGE OF MATERIALS AT THE JOB-SITE

Storage not permitted beyond brief accumulation awaiting pick up by removal trucks. Delays in the removal of site-clearing materials from the job-site shall be subject to the approval of the City Engineer or the Consultant.

END OF SECTION

THIS PAGE INTENTIONALLY LEFT BLANK

SECTION 02220
SITE DEMOLITION

PART 1 GENERAL

1.1 DESCRIPTION OF WORK

A. This Section covers all demolition, together with the removal and disposal of items.

B. Related Work Specified Elsewhere:
1. Refer to Division 0, GENERAL CONDITIONS and Division 1, GENERAL REQUIREMENTS.
2. Clearing and grubbing is specified in Section 02210, CLEARING AND GRUBBING.
3. Excavating and filling for the site is specified in Section 02310, EARTHWORK, except as herein specified.

1.2 QUALITY ASSURANCE

A. Requirements of Regulatory Agencies:
1. Traffic:
a. Obstruction. Do not close, obstruct, or store material or equipment in streets, sidewalks, alleys or passageways without a permit in accordance with all local ordinances, regulations and codes.

1.3 JOB CONDITIONS

A. Salvage. Remove equipment, material, or items called for on the plans, and store as directed, the items to remain the property of the Owner. These items are assumed to be in good operating condition at the time the Contract is signed. Properly protect them and remove them complete, including all appurtenances, and deliver in good order to the Owner as directed.

B. Environmental Requirements:

1. Ground and Surface Water. After the existing buildings or structures have been removed, protect the resulting building excavation or open area from surface or ground water. Promptly remove any water which accumulates in the excavation or opening. The method of dewatering and the disposal of the water is subject to review by the Owner.

C. Protection:

1. General Requirements. Protect persons and property in accordance with the GENERAL CONDITIONS. Remove all temporary construction upon completion of the Project.
a. Temporary Barricade Fence. On all sides of the property except where existing buildings are on the property line or where a sidewalk shed is specified, erect an 8 foot (2.44 m) high fence built solid for its entire length and height, except for such openings as doors, necessary for the proper prosecution of the Work.
b. Temporary protective fence. Before beginning any excavation or construction Work at the site, erect a temporary protective fence around the excavation and immediately adjacent to the building. Erect a 4-foot

(1.22 m) high fluorescent orange temporary protective fence secured to posts not more than 8 feet (2.44 m) o.c.

2. Existing structures and property. Take precautions to guard against movement or settlement of adjacent buildings or structures. Provide and place bracing or shoring as necessary or proper in connection therewith. Be responsible for safety and support of such buildings and structures. Be liable for any movement or settlement, any damage or injury caused thereby or resulting therefrom. If at any time safety of any adjacent buildings or structures appears to be endangered, cease operation, take precautions to support such buildings or structures and notify the Engineer. Resume operations only after permission has been granted. If the Engineer considers additional bracing or shoring necessary to safeguard, or prevent movement or settlement, install such bracing or shoring upon Engineer's order. If the Contractor fails to comply promptly with such order, such bracing and shoring may be placed by the Owner at the Contractor's expense.

PART 2 – PRODUCTS (NOT USED)

PART 3 - EXECUTION

3.1 INSPECTION

A. Condition of Premises:

1. Accept the premises as found and clear the site as specified. The Owner assumes no responsibility for condition of site at time of proposal or continuation of conditions thereafter. Assume risk regarding damage or loss, whether by reason of fire, theft, or other casualty or happening.

3.2 PREPARATION

A. Utilities:

1. Prior to disconnecting, removing, plugging or abandoning existing utilities, notify all utility corporations, companies, individuals or local authorities concerned with the Work.

3.3 INSTALLATION/APPLICATION/PERFORMANCE/ERECTION

A. Performance:

1. Demolition:

a. Walks and Drives. Where indicated on the drawings, remove pavement, curbs and sidewalks to full depth, take care to avoid damage to adjacent remaining pavement or sidewalks. Make cuts in such a manner that a clean vertical joint remains.

b. Utilities. Disconnect electrical service and/or cut off and cap gas, water and sewer services at the mains on the property or in the street as required by the responsible utility company, or local authority or relocate as shown on the drawings. Remove and cut off and plug or cap all utilities within the existing building areas, except those designated to remain. The Contractor shall coordinate the removal Work with the relocation and/or new Work being performed by all contractors.

c. Removal. Unless otherwise noted or specified to be relocated or stored, all materials removed become the property of the Contractor and are to be removed completely away from the site by them. Do not store or permit debris to accumulate on the Site. If the Contractor fails to remove excess

debris promptly, the Owner reserves the right to cause same to be removed at Contractor's expense.

3.4 FIELD QUALITY CONTROL

A. Workmanship:
   1. Demolition Work. Execute in an orderly and careful manner with due consideration for neighbors and the public. Execute the Work to insure adjacent properties and the public against damages incurred by falling debris or other causes.
   2. Masonry. Demolish in small sections and brace and shore where necessary to avoid collapse of the structure.
   3. Burning of Materials. Burn no materials or debris on the premises.
   4. Dust control. Constantly sprinkle all rubbish and debris with water to lay down the dust.

B. Traffic:
   1. Interference. Conduct operations with minimum interference with roads, streets, driveways, alleys, sidewalks and other facilities.

3.5 ADJUSTMENT AND CLEANING

A. Temporary Structures. Remove all temporary structures when they are no longer required.

B. Repair:
   1. Clean up, repair, or replace at no cost to the Owner, all property damaged by reason of required Work, including restoring all disturbed areas, surfaced and unsurfaced, to their original condition on completion of the Work. All patchwork shall match existing and be performed in a neat and workmanlike manner by craftsmen skilled in the trade involved. Painted surfaces shall be painted to match the adjacent areas. In newly graded areas take every precaution and temporary measures necessary, such as temporary seeding, to prevent damage from erosion of freshly graded areas. Where any settlement or washing may occur prior to acceptance of the work, repair and re-establish grades to the required elevations and slopes at no additional cost to the Owner. This applies to damage to the newly graded areas within the construction limits and damage to adjacent properties by eroded material.

END OF SECTION

THIS PAGE INTENTIONALLY LEFT BLANK

SECTION 02235
DEWATERING

PART 1 - GENERAL

1.1 RELATED DOCUMENTS

A. Drawings and general provisions of the Contract, including General and Supplementary Conditions and Division 1 Specification Sections, apply to this Section.

1.2 SUMMARY

A. This Section includes construction dewatering.

B. Related Sections include the following:

1. Division 2 Section "Earthwork" for excavating, backfilling, and site grading.

1.3 PERFORMANCE REQUIREMENTS

A. Dewatering Performance: Design, provide, test, operate, monitor, and maintain a dewatering system of sufficient scope, size, and capacity to control ground-water flow into excavations and permit construction to proceed on dry, stable subgrades.

1. Work includes removing dewatering system when no longer needed.

2. Maintain dewatering operations to ensure erosion is controlled, stability of excavations and constructed slopes is maintained, and flooding of excavation and damage to structures and utilities are prevented.

3. Prevent surface water from entering excavations by grading, dikes, or other means.

4. Accomplish dewatering without damaging existing buildings and utilities adjacent to excavation.

5. Identify steps to minimize the volume, monitor and pre-treat dewatering effluent to improve its quality prior to disposal.

6. Apply for appropriate permits necessary to perform dewatering operations. Perform testing, documentation, and reporting associated with permit compliance requirements.

7. Provide pretreatment as dictated by the permit stipulations in accordance with water quality testing results.

8. Identify steps to minimize the volume, monitor and pre-treat dewatering effluent to improve its quality prior to disposal.

9. Identify appropriate shoring techniques to minimize dewatering volumeband provide appropriate site protection during construction activities.

1.4 SUBMITTALS

A. Shop Drawings: For dewatering system. Show arrangement, locations, and details of wells and well points; locations of headers and discharge lines; and means of discharge and disposal of water.

1. Include a written report outlining control procedures to be adopted if dewatering problems arise.

2. If retaining "Performance Requirements" Article, retain subparagraph below to meet requirements of authorities having jurisdiction or to follow customary practice in Project's location.

3. Include Shop Drawings signed and sealed by a California registered professional engineer responsible for their preparation.

B. Dewatering Plan: The dewatering plan shall include all the requirements of Bureau of Engineering Special Order No. 001-0204. Submit Dewatering Plan to the Bureau of Sanitation (BOS), Regional Water Quality Control Board and National Pollutant Discharge Elimination System (NPDES) for plan check review, approval and permit. Steps shall be identified to minimize the volume, to monitor and pre-treated to improve the quality of dewatering effluent prior to disposal.

C. BOS Industrial Waste Permit: Obtain a BOS Industrial Waste Permit for disposing dewatering effluent into sanitary sewers. Sewers are primary disposal sites for dewatering effluent. Disposal into storm drains may only be used as a last resort and will be heavily regulated.

D. Qualification Data: For firms and persons specified in "Quality Assurance" Article to demonstrate their capabilities and experience. Include lists of completed projects with project names and addresses, names and addresses of architects and owners, and other information specified.

E. Photographs or videotape, sufficiently detailed, of existing conditions of adjoining construction and site improvements that might be misconstrued as damage caused by dewatering operations.

F. Record drawings at Project closeout identifying and locating capped utilities and other subsurface structural, electrical, or mechanical conditions.

1.5 QUALITY ASSURANCE

A. Installer Qualifications: Engage an experienced installer to assume engineering responsibility and perform dewatering who has specialized in installing dewatering systems similar to those required for this Project and with a record of successful in-service performance.

B. Professional Engineer Qualifications: A California registered profesional engineer who is experienced in providing engineering services for designing dewatering systems that are similar to those indicated for this Project in material, design, and extent.

1. Engineering Responsibility: Engage a qualified professional engineer to prepare or supervise the preparation of data for the dewatering system including

drawings, testing program, test result interpretation, and comprehensive engineering analysis that shows the system's compliance with specified requirements.

C. Regulatory Requirements: Comply with water disposal requirements of authorities having jurisdiction.

1.6 PROJECT CONDITIONS

A. Existing Utilities: Do not interrupt utilities serving facilities occupied by the Owner or others unless permitted in writing by the Engineer and then only after arranging to provide temporary utility services according to requirements indicated.

B. Project Site Information: A geotechnical report has been prepared for this Project and is attached to the Project Specifications for information only. The opinions expressed in this report are those of the geotechnical engineer and represent interpretations of the subsoil conditions, tests, and results of analyses conducted by the geotechnical engineer. Owner will not be responsible for interpretations or conclusions drawn from this data by Contractor.

1. Make additional test borings and conduct other exploratory operations as necessary.

C. Survey adjacent structures and improvements, employing a qualified professional engineer or surveyor, establishing exact elevations at fixed points to act as benchmarks. Clearly identify benchmarks and record existing elevations.

1. During dewatering, resurvey benchmarks weekly, maintaining an accurate log of surveyed elevations for comparison with original elevations. Promptly notify Architect if changes in elevations occur or if cracks, sags, or other damage is evident in adjacent construction.

PART 2 - PRODUCTS (NOT USED)

PART 3 - EXECUTION

3.1 PREPARATION

A. Protect structures, utilities, sidewalks, pavements, and other facilities from damage caused by settlement, lateral movement, undermining, washout, and other hazards created by earthwork operations.

1. Prevent surface water and subsurface or ground water from entering excavations, from ponding on prepared subgrades, and from flooding site and surrounding area.

2. Protect subgrades and foundation soils from softening and damage by rain or water accumulation.

B. Install dewatering system to ensure minimum interference with roads, streets, walks, and other adjacent occupied and used facilities.

1. Do not close or obstruct streets, walks, or other adjacent occupied or used facilities without permission from Owner and authorities having jurisdiction. Provide alternate routes around closed or obstructed traffic ways if required by governing regulations.

3.2 DEWATERING

A. Install dewatering system utilizing wells, well points, or similar methods complete with pump equipment, standby power and pumps, filter material gradation, valves, appurtenances, water disposal, and surface-water controls.

B. Before excavation below ground-water level, place system into operation to lower water to specified level, a minimum of three feet below the bottom of planned excavations, and then operate it continuously until drains, sewers, and structures have been constructed and fill materials have been placed, or until dewatering is no longer required.

C. Provide an adequate system to lower and control ground water to permit excavation, construction of structures, and placement of fill materials on dry subgrades. Install sufficient dewatering equipment to drain water-bearing strata above and below bottom of foundations, drains, sewers, and other excavations.

1. Do not permit open-sump pumping that leads to loss of fines, soil piping, subgrade softening, and slope instability.

D. Dispose of water removed from excavations in a manner to avoid endangering public health, property, and portions of work under construction or completed. Dispose of water in a manner to avoid inconvenience to others. Provide sumps, sedimentation tanks, and other flow-control devices as required by authorities having jurisdiction.

E. Provide standby equipment on-site, installed and available for immediate operation, to maintain dewatering on a continuous basis if any part of system becomes inadequate or fails. If dewatering requirements are not satisfied due to inadequacy or failure of dewatering system, restore damaged structures and foundation soils at no additional expense.

1. Remove dewatering system from Project site on completion of dewatering. Plug or fill well holes per the current requirements of City of Los Angeles.

F. Damages: Promptly repair damages to adjacent facilities caused by dewatering operations.

END OF SECTION

SECTION 02240
SHEETING, SHORING, AND BRACING SYSTEMS

PART 1 -- GENERAL

1.1 SUMMARY

Provide shoring at open excavations and elsewhere where greater than 5-feet in depth. Shoring shall be furnished, placed, maintained and removed by the Contractor, as needed to protect workers, materials, other properties and the public.

1.2 SYSTEM DESCRIPTION

A. General:

1. Shoring systems are not fully detailed on the Drawings, which are diagrammatic and show design intent of finished profiles, shapes and forms.

2. Specifications are of the performance type and include the minimum requirements of the excavation support system without limiting the Contractor to methods of achieving such performance.

B. Survey of existing conditions:

1. Employ California licensed surveyor or civil engineer to make a survey of existing adjacent structures and improvements.

   a. Establish precise elevations at fixed points to act as benchmarks.

   b. Clearly identify benchmarks and record existing elevations.

2. Photograph conditions encountered to highlight defects in existing construction. Notify the Engineer and registered owners of adjacent properties in writing when the survey is to be made and photographs taken so they may have representatives present.

   a. Have those representatives present sign the survey and photographs as witnesses.

   b. Upon completion of this work, make a similar examination of the properties originally surveyed, giving similar notice to all interested parties so they may be present during the final examination of the properties. Send a record of the original and final examinations to all concerned parties.

C. Design Requirements:

1. Shoring: Design shoring in accordance with all applicable codes, and in accordance with the specific requirements shown on the Contract Drawings and specified in the Geotechnical Report. All wood components of the shoring system shall be constructed of pressure treated wood in conformance with the code requirement.
2. Loading: Design and construct shoring to withstand all soil and hydrostatic loading that might occur during the various stages of construction and for any

surcharging loading caused by equipment loads, loads from material or soil stockpiles, and earthquake-induced loads.

a. Determine the soil, surcharge, and hydrostatic loading, but in no case shall the loading be less than the earth and minimum equipment surcharge pressures.

b. Determine the proper load distributions caused by such activities and assure that those conditions are not exceeded in the field during construction.

c. Design the shoring for lateral earth and water pressures and surcharge loads that could result from construction methods and dewatering activities.

d. Consider sequence of excavation and placement as well as their removal of the lateral support elements in design of shoring.

3. Allowable deflection: Refer to 3.4B of this Specification Section.

4. Existing pipes or structures shall not be used to support any portion of the open excavation unless approved by the Engineer in writing.

5 The design of shoring shall conform to accepted engineering practice in this field. Approval of the Contractor's plans and methods of construction by the Engineer or the authorized agencies does not relieve the Contractor of his responsibility for the adequacy of this support.

D. Performance Criteria:

1. The Contractor shall be solely responsible for and bear the sole burden of cost for any and all damages resulting from improper shoring or failure to shore.

2. The safety of workmen, the protection of adjacent structures, property and utilities, and the installation of adequate supports for all excavations shall be the sole responsibility of the Contractor.

3. The design, planning, installation, and removal of all shoring shall be accomplished in such a manner as to maintain stability of the required excavation, or trench section, and to prevent any movement of soil that may cause damage to adjacent structures and utilities, damage or delay the work, or endanger life and health.

1.3 RELATED WORK SPECIFIED ELSEWHERE

A. Section 02310 Earthwork.

B. Section 02810 Irrigation System.

C. Section 03300 Cast-in-Place Concrete.

D. Section 05120 Structural Steel.

E. Division 15 Mechanical.

F. Division 16 Electrical.

1.4 CONTRACTOR SUBMITTALS

A. Comply with pertinent provisions of Section 01330 - SUBMITTALS of DIVISION 1 - GENERAL REQUIREMENTS.

B. Design and Calculations: The Contractor shall design and prepare shoring drawings and make calculations of materials used structurally in excavations, footings and foundation in accordance with the code requirements.

C. Shop Drawings: After submitting drawings for shoring to the Engineer for review, the Contractor shall incorporate all comments or corrections in the drawings, and submit to the authorized governing agencies for approval, at least three (3) weeks prior to commencement of work. After the approval is obtained, the Contractor shall submit seven (7) duplicate copies of the approved drawings to the Engineer. No excavations shall start until all the reviews and approval of the shoring design, which includes the following minimum items, have been obtained from the authorized agencies, or the Engineer:

1. Design assumptions, analysis calculations, and information on Contractor's proposed method of installation and removal of all shoring.

2. The maximum design load to be carried by the various members of the support system.

3. Detailed excavation support drawings, showing all pertinent dimensions, spacing, and relationships among the components of the shoring, as well as construction sequence and scheduling.

4. The method of bracing and preloading, if any.

5. Detailed utility and structure support drawings, where necessary.

6. The full excavation depth and depth(s) below the main excavation to which the support system will be installed.

7. Detailed sequence of construction and loads for various stages of bracing removal.

8. Detailed drawings and descriptions of the method to be used by the Contractor to monitor shoring movements.

9. Types of construction equipment intended to be used in this Project.

10. Method of removing the soil from the trench or shoring.

11. Backfill materials and method of backfill and compaction.

12. Dewatering Plans.

D. Quality Control Submittals:

1. Design Data: All the design and calculations and shop drawings shall be sealed and signed by a Civil or Structural Engineer licensed in the State of California and experienced in the design of earth retaining structures. The professional engineer shall be obtained and paid for by the Contractor.

E. Permits:

1. Submit in accordance with provisions in Section 01112 – DESCRIPTION OF WORK in DIVISION 1 - GENERAL REQUIREMENTS and other Sections of the Project Manual.

2. The Contractor shall submit shoring drawings and calculations to the Los Angeles City Department of Building and Safety and obtain and pay for the required permit.

3. Obtain permit(s) as required by Title 8, Division 1-DEPT. OF INDUSTRIAL RELATIONS, Chapter 4 –DIVISION OF INDUSTRIAL SAFETY of the California Code Of Regulation, and pursuant to Subsection 7-10.4.1 - SAFETY ORDERS of SSPWC, prior to excavating to the depth of 5-feet or greater. A duplicate copy of the permit shall be submitted to the Engineer for review prior to the start of excavation.

F. Certification Form: Contractor shall completely fill out a Competent Person Trench/Excavation Certification Form provided by Inspector of Bureau of Contract Administration prior to any worker access to trench or excavations, and return it to the Inspector. Contractor shall certify by this form: the name of the competent person administering the work, the soil classification, and the type of excavation protective system provided/installed.

G. Shoring Monitoring Data: As Specified herein.

H. Notification: As required by Section 3301.2 of the Los Angeles City Building Code, before commencing the excavation which is not in excess of 12 feet below grade, the Contractor shall notify in writing the owners of adjoining buildings not less than 10 days before such excavation is to be made and that the adjoining buildings should be protected.

1.5 QUALITY ASSURANCE

A. Use adequate numbers of skilled workers who are thoroughly trained and experienced in the necessary crafts and who are completely familiar with the specified requirements and the methods needed for proper performance of the work of this Section.

B. Employ a qualified engineer having at least five (5) year experience to design the shoring system and to inspect and report on the quality of its construction.

C. Comply with pertinent requirements of governmental agencies having jurisdiction.

D. Coordinate the shoring design and construction with:

1. Soil Investigation Report prepared for this Work.

2. Structural system established for the Work, including location of columns, pilasters, walls, and other features.

3. Utilities established in the site.

E. Regulatory Requirements:

1. Conform to provisions of Section 01410 - REGULATORY REQUIREMENTS in the GENERAL REQUIREMENTS.

2. Comply with applicable requirements, but not necessarily limited to, shown on the Contract Drawings; latest adopted version of the Los Angeles City Building Code, Section 1802 – QUALITY AND DESIGN and Section 3301 – EXCAVATION AND FILLS; State of California, Code of Regulations, Title 8 – INDUSTRIAL RELATIONS, Division 1-DEPARTMENT OF INDUSTRIAL RELATIONS, Chapter 4 – DIVISION OF INDUSTRIAL SAFETY, Subchapter 4 – CONSTRUCTION SAFETY ORDERS, Section 1539, 1540, and 1541.

1.6 PROTECTIONS

A. Protect adjacent existing improvements against damage by the Contractor's operations. Protect all excavation so that the soil of adjoining property will not cave in or settle. Repair or replace damaged items to the full satisfaction of the Engineer at no extra cost to the City.

B. Shore, crib or lag excavations and earthbanks, as necessary, to prevent caving in, erosion or gullying of sides.

C. Divert or pump water out of all excavations and trenches until all installation work and backfilling are completed and inspected.

1.7 INSPECTIONS

A. Excavation of existing fills, reworking of natural soils and compaction of all required fills will be inspected and tested by the City of Los Angeles Building and Safety Inspector and the Soils Engineer who will be responsible to the Engineer and will be paid for by the City.

B. Place all such backfill under the full supervision of the Soils Engineer.

PART 2 -- PRODUCTS (NOT USED)

PART 3 -- EXECUTION

3.1 SURFACE CONDITIONS

A. Examine the areas and conditions under which work of this Section will be performed. Correct conditions detrimental to timely and proper completion of the work. Do not proceed until detrimental conditions are corrected.

B. Existing Utilities: Contract Drawings show major utilities, but all utilities may not be shown. The Contractor will obtain all as-built records of existing utilities from local government authorities or Utility Companies and field check locations of utilities with

representatives of the Utility Company. Protect from damage and provide utility trench support to any sewer, water, gas, electric or other pipelines or conduits uncovered during work.

1. Excavate by hand or other excavation methods acceptable to the utility owner.

2. If existing utilities interfere with Contractor's proposed method of support, any required modification or relocation shall be performed at no additional cost to the City.

3. Contact Underground Service Alert, (800) 422-4133, and obtain underground service alert inquiry I.D. Number 48 hours prior to digging. Report the I.D. Number to the Bureau of Contract Administration when calling for inspection.

C. Provisions for Contingencies:

1. Provide a contingency plan or alternative procedures to be implemented, if unfavorable performance is evidenced from the monitoring program.

   a. Keep on hand the necessary materials and equipment to implement the contingency plan.

2. If support elements project beyond the vertical projection of the right-of-way shown on the Contract Drawings onto adjoining property, the City the Contractor shall obtain permission of the adjoining property owner in writing. The Contractor shall bear cost required to obtain such permission.

3. Subsurface Conditions: Evaluate subsurface conditions as excavation occurs.

4. Differing Conditions: Notify the Engineer of differing conditions that could affect the shoring design assumptions.

5. Acceptance: Proceeding with work means acceptance of existing conditions.

6. Notifications: The Contractor shall make all the necessary notifications to the adjacent properties, as described herein before.

3.2 PREPARATION

A. Protection:

1. Protect or repair utilities damaged by operations of this Section.

2. Protect adjacent structures and property from damage and disfiguration.

B. Dewatering:

1. Where applicable, no excavation shall commence until the Contractor has demonstrated to the satisfaction of the Engineer that the groundwater level has been lowered. Dewatering and that the soils inside the excavation are in the dewatered condition that was assumed in the Contractor's shoring design and submittal.

3.3 INSTALLATION

A. All trench and excavation openings shall be lighted and fenced or barricaded during nights, weekends, and other times, as necessary, and meet CAL/OSHA safety requirements.

B. All shoring shall be installed to the lines and elevations shown on the Contractor's approved working drawings. No component of the shoring shall infringe on the minimum dimensions of any permanent structure shown in the Contract Drawings.

C. The excavation shall be staged as shown in the Construction Drawings or on required work documents and in such a manner as to provide a stable system of support at all times.

D. Should the shoring system utilize steel H-beams, piles, or other similar vertical supports, driving of said vertical supports will not be permitted in proximity of existing structures except for the last 4-feet. The vertical supports shall be placed in holes drilled to a depth of 4-feet above the proposed bottom of pile, except where this procedure is impracticable. The vertical support may then be driven to the required depth, not to exceed 4-feet. During the drilling and driving operations, the Contractor shall take care to avoid damage to utilities.

E. At locations where the drilling of such holes is impracticable because of the existence of obstructions or rocks, running sand, or other adverse condition, and provided said impracticability is demonstrated to the satisfaction of the Engineer by actual drilling operations by the Contractor, the Engineer may, upon request of the Contractor, approve the use of means other than drilling for the purpose of placing the vertical support. Such other means, however, must be of a nature which will accomplish, as nearly as possible, the purpose of the drilling, namely, the prevention of damage to existing surface or subsurface improvements, both public and private.

3.4 MONITORING

A. Employ a California-licensed surveyor or civil engineer to design, construct and maintain an on-going monitoring system of the horizontal and vertical deflections of the excavation support systems and the settlement of the adjacent ground and structures.

1. Regularly resurvey benchmarks specified during installation of excavation support systems.

2. Monitor excavation support and protection systems daily during excavation progress and for as long as excavation remains open.

3. Regularly survey adjacent ground and structures to verify that no settlement is occurring or has occurred as a result of the construction activities.

4. Maintain an accurate log of surveyed elevations and positions for comparison with original elevations and positions. Maintain accuracy within 1/100 of a foot and keep records in a readily understandable form, such as a tabular form of both the net and total deflections (both horizontal and vertical) of each soldier pile.

B. Submit a copy of all the daily readings to the Engineer at the end of each week. Notify the Inspector or the Engineer immediately for any excessive movements or deflection.

1. If changes in elevations or positions occur or if cracks, sags, or other damage is evident in adjacent construction, promptly notify Engineer and immediately take steps to remedy the situation.

2. Horizontal and lateral deflections into the excavation at any location on the shoring shall be limited to a maximum of 1 inch, or to a maximum of 0.5 inch within the influence zone of an existing structure, adjacent to a utility sensitive to deflection, or other special circumstances as determined by the Engineer for work in or affecting the public right-of-way. Deflection in private property not affecting the public right-of-way shall be limited to 0.5 inch. Specific deflection limits as noted on the plans, specifications, or other bid documents shall take precedence.

3. The total of the allowable calculated deflection for secondary members (lagging or sheeting) added to the calculated deflection for primary members may be 50 percent greater than the limits identified when struts are placed no more than 5 feet apart on center, or piles are spaced no more than 8 feet apart on center.

4. If at any time the measured deflection exceeds the allowable maximum deflection, immediate corrective measures shall be taken by the Contractor to prevent any further deflections.

5. The Contractor shall stop the excavation work until corrective measures have been taken and the deflections have been reduced to acceptable limits as specified.

3.5 REMOVAL OF SHORING

A. Shoring shall be designed to be gradually removed as necessary to allow backfill to be placed and compacted. All voids existing behind the shoring which remains in place shall be backfilled with **structural concrete** as specified in Section 02310 - EARTHWORK.

B. Shoring shall be removed as backfilling progresses. Removal shall be conducted in such a manner so as to avoid any damage to the tunnel structure, adjacent facilities, or to other members of the shoring system. Impact loading on the tunnel or in members of the shoring system will not be allowed. All wood forms, loose or casual wood and debris shall be removed. Areas that cannot be accessed or achieve adequate compaction shall be backfilled with **structural backfill** at no additional cost to the City.

C. During backfilling, temporary support elements shall not be removed until alternative support is available, such as substituted struts, backfill, or ability of the support system to act as a cantilever without detrimental deflection.

D. Portions of shoring used to support excavations for installation of sanitary sewer and storm drain facilities shall be removed, left in place, with permission of the Engineer or the pipe bedding and side support shall be recompacted to the satisfaction of the Engineer.

END OF SECTION

SECTION 02310
EARTHWORK

PART ONE - GENERAL

1.1 SUMMARY

A. Provided and execute earthwork as indicated on the Contract Drawings in the Project Manual including but not limited to the following:

1. General excavating and trenching for various trades.

2. General exterior grading and cutting.

3. General excavating for site improvements.

4. Select base materials for under concrete slab and under paving.

5. Filling and Backfilling.

6. Treatment for termite control.

7. Structure excavation, unclassified fill and borrow excavation defined in Section 300 – EARTHWORK of the "Standard Specifications for Public Works Construction (SSPWC)".

B. RELATED WORK SPECIFIED ELSEWHERE:

1. Documents affecting work of this Section include, but are not necessarily limited to the GENERAL CONDITIONS, SUPPLEMENTARY CONDITIONS, DIVISION 1 - GENERAL REQUIREMENTS and other applicable Sections of the Project Manual.

2. Demolition in Division 2.

3. Clearing, Grubbing and Stripping in Section 02210.

4. Shoring in Section 02240.

5. Yard and Street Work in Section 02710.

6. Storm Drain System in Section 02545.

7. Irrigation and Landscaping Work in Division 2.

8. Concrete Work in Division 3.

9. Plumbing Work in Division 15.

10. Electrical Work in Division 16.

1.2 QUALITY ASSURANCE

A. Labor: Use adequate numbers of skilled laborers to are thoroughly trained and experienced in the necessary crafts and who are completely familiar with specified requirements and the methods needed for proper performance of the Work of this Section.

B. Equipment: Use equipment adequate in size, capacity, and numbers to accomplish the work of this Section in a timely manner.

C. Codes and Standards: Perform excavation work in compliance with applicable ordinance of governing authorities having jurisdiction including, but not limited to, the L. A. City Building Code and applicable Amendments; Division 1-DEPARTMENT OF INDUSTRIAL RELATIONS of Title 8 of the California Code of Regulations; Section 300 - EARTHWORK of SSPWC, as amended by Brownbook.

1. In addition to complying with Codes and Standards having jurisdiction, comply with directions of the Soil Engineer.

D. The Contractor shall provide necessary measures for storm water pollution control and water quality protection. The Contractor shall meet the standards of good housekeeping at all time.

E. Testing and Inspection Services: The City will engage a qualified soil testing and inspection service for quality control testing during earthwork operations. Testing shall be performed in accordance with the soil investigation reports and testing standards, the instructions of the Soil Engineer and the applicable Sections of General Conditions.

F. Soil Engineer: The Contractor will retain the services of a Soil Engineer for the purpose of soil investigations and testing, all the necessary inspections and observations, and certifications.

G. Survey: The Contractor shall employ the services of a California licensed surveyor for the purposes of survey control, layout, grade and cross-sections required to control work. Survey work shall conform to Section 01722- SURVEYING.

1.3 SUBMITTALS

A. Conform to provisions of Section 01330 of DIVISION 1 - GENERAL REQUIREMENTS.

B. Shop Drawing of the Shoring System in Section 02240.

C. Sources of Imported Materials.

D. Method of Back-Filling and Compaction.

E. Dewatering Plans.

F. California General Construction Activity Stormwater Permit, Waste Discharge Identification Number, Wet Weather Erosion Control Plan or Stormwater Pollution Prevention Plan.

G. Competent Person Trench/Excavation Certification Form in Section 02240 - SHORING.

H. Test Reports-Excavating: Contractor shall submit the following reports directly to the Los Angeles City Department of Building & Safety, prepared by the Soil Engineer and the testing service, with a copy to the Engineer.

1. Test reports on borrow material.

2. Verification of each footing subgrade.

3. Field density test reports.

4. One optimum moisture-maximum density curve for each type of soil encountered.

5. Other test reports as required by the Soil Engineer and the local cognizant agency.

1.4 PERMITS

A. Required: In addition to the requirements specified herein, and in applicable Section 01112 – DESCRIPTION OF WORK of DIVISION 1 - GENERAL REQUIREMENTS of the Project Manual.

B. The Contractor shall perform all work in accordance with the permit requirements of the Los Angeles City Department of Building and Safety, including obtaining the grading permit, hauling permit and bond, and making the notification to the adjacent property owners; no additional compensation will be allowed therefore.

C. Contractor shall furnish Engineer with a duplicate copy of OSHA excavation permit, and all other required permits prior to the start of the excavation work.

D. The Contractor shall obtain and pay for the Bureau of Engineering's Shoring (Lateral Support) Permit.

E. The Contractor shall obtain and pay for the California State Regional Water Quality Control Board (LARWQCB) Construction Water Discharge Permit, if needed.

F. The Contractor shall obtain and pay for Calif General Construction Activity Stormwater Permit. The Contractor shall obtain Waste Discharge Identification Number after submitting Wet Weather Erosion Control Plan (WWECP) pursuant to Section 61.02 and 64.72 of L.A.M.C. Stormwater Pollution Prevention Plan (SWPPP) pursuant to Section 91.106 of L.A.M.C. to the Los Angeles City Dept. Building and Safety for reviews.

G. The Contractor shall make all necessary notifications, obtain and pay for required permits and file manifests with the South Coast Air Quality Management District (S.C.A.Q.M.D.).

1.5 JOB CONDITIONS

A. Required Work Coordination: The Contractor shall fully coordinate the work operations of this Section with that of other trades involved and with the Engineer to assure proper sequence of work, limitations, methods and time of work so as to minimize or avoid interference with the existing utilities as well as performance of work by the other Contractors. The Contractor shall coordinate and arrange for all the inspections with the local authorized agencies and the Bureau of Contract Administration.

B. Trench Safety: Attention is directed to the provisions of Section 6705 of the Labor Code and Section 02240 – SHORING of the Project Manual concerning trench excavation safety plans.

C. Air Pollution Control: The Contractor shall comply with all air pollution control rules, regulations, ordinances and statutes which apply to work performed pursuant to the Contract, including any air pollution control rules, regulations, ordinances and statutes, specified in Section 1107 of the Government Code.

D. Use of Pesticides: The Contractor shall comply with all rules and regulations of the Department of Food and Agriculture, the Department of Health, the Department of Industrial Relations and all other agencies which govern the use of pesticides required in the performance of the Work on the Contract.

1. Pesticides shall include, but shall not be limited to herbicides, insecticides, fungicides, rodenticides, germicides, menatocides, bactericides, inhibitors, fumigants, defoliants, soil sterilants, and repellents.

2. Any substance or mixture of substances intended for preventing, repelling, mitigating or destroying weeds, insects, diseases, rodents, or nematodes and any substance of mixture for substances intended for use as a plant regulator, defoliant shall be considered as a pesticide.

E. Sound Control Requirements: The Contractor shall comply with all local sound control and noise level rules, regulations and ordinances which apply to any work performed pursuant to the Contract.

Each combustion engine, used for any purpose on the job or related to the job, shall be equipped with a muffler of a type recommended by the manufacturer. No internal combustion engine shall be operated on the project without said muffler.

F. Use of Explosives: The use of explosives is not permitted.

1.6 PROTECTIONS

A. General: Comply with provisions of Section 00309 - PROTECTION OF PERSONS AND PROPERTY AND RESTORATION OF EXISTING IMPROVEMENTS in GENERAL CONDITIONS. Protect and guard all excavations against damage to life, limb and property as prescribed by Los Angeles City Department of Building and Safety.

B. Protections of Persons and Property: Provide and install signs, lights and barricades at danger points on and off the job-site to guard against accidents, etc.

1. Barricade open excavations occurring as part of this work and post with warning lights.

2. Operate and maintain warning lights as recommended by authorities having jurisdiction.

3. Protect structures, utilities, sidewalks, pavements and other facilities from damage caused by settlement, lateral movement, undermining, washout and other hazards created by earthwork operations.

4. Perform excavation within drip-line of large trees to remain by hand, and protect the root system from drainage or dry out to the greatest extent possible. Maintain moist condition for root system and cover exposed roots with burlap. Paint root cuts of 1" diameter and larger with emulsified asphalt tree paint.

C. Existing Improvements (including trees and shrubs Indicated to Remain): Protect against damage resulting from Contractor's operations. Repair or replace damaged items to the full satisfactions of the City at no added cost to the City.

D. Shoring, Cribbing and Lagging: Required of excavations and earthbanks as necessary to prevent caving in, erosion or gullying of sides. Conform to applicable provisions in Section 02240 – SHORING of the Project Manual.

1. Design and calculations of shoring, etc., shall be in accordance with requirements of with the latest Los Angeles City Building Code, Section 2811 and Safety Orders of State of California, Division of Industrial Safety, Title 8, Subchapter 4, Article 6, Sections 1540 and 1541.

2. Upon completion of project or when no longer needed or otherwise directed by the authority having jurisdiction, remove all such shoring from the job-site.

E. Water: Divert or pump out of all excavations until concrete and other items are placed therein, forms removed and backfilling is completed. The Contractor shall provide a means for solids removal before discharging the water.

F. Existing Utilities: Utilities shown on the drawings are shown pursuant to a search of available records and are shown as a matter of information and not as a matter of fact. Conforming with Section 01112 - SUMMARY OF THE WORK, Section 01140 – CONTRACTOR'S USE OF THE PREMISES and other Sections of the Project Manual, the Contractor shall locate existing underground utilities in areas of work. If utilities are to remain in place, provide adequate means of support and protection during earthwork operations.

1. Should uncharted or incorrectly charted piping or other utilities be encountered during excavation, consult City immediately for directions. Cooperate with City and utility companies in keeping respective services and facilities in operation. Repair damaged utilities to satisfaction of utility Company.

2. Do not interrupt existing utilities serving facilities occupied and used by City and others, during occupied hours, except when permitted in writing by the Engineer and then only after acceptable temporary utility services have been provided.

3. Provide a minimum of 48-hour notice to the Engineer, and receive written notice to proceed before interrupting any utility. Obtain clearance and notify all utility companies in the area and call Underground Service Alert by calling (800) 422-4133. Deliver utility clearance ticket number to the Engineer prior to the start of any work.

4. Demolish and completely remove from site existing underground utilities indicated to be removed. Coordinate with utility companies for shut-off of service if lines are active.

1.7 INSPECTION

A. Required: All excavations and trenches shall be inspected by the Los Angeles City Building and Safety Inspector, and the Soil Engineer before filling, backfilling and/or other subsequent work is placed therein.

1. Earthwork backfill for structures shall comply with requirements of Section 300-3.5 - STRUCTURAL BACKFILL of SSPWC and/or requirements in the Project Manual.

1.8 SOILS INFORMATION

A. Soils Report No. 211019003 dated July 1, 2022, is a part of Project Manual. Contractor shall comply with all Soils Report recommendations specified and other instruction directed by the Engineer. In case of conflicts between other parts of the Project Manual and Soils Report the most restrictive condition shall govern unless otherwise approved by the Soil Engineer. Soil Report is provided in Section 01112 – DESCRIPTION OF WORK of the Project Manual.

1.9 MATERIAL HANDLING

A. Delivery: All materials, tools, equipment, etc., to be delivered to the job-site, in such a manner coordinated with progress of work of this Section.

B. Material Storage: Stockpile satisfactory excavated materials where directed, until required for backfill or dispose of in accordance with Section 300-2.6 - SURPLUS MATERIALS of SSPWC. Place, grade and shape stockpiles for proper drainage.

1. Locate and retain soil materials away from edge of excavations. Do not store within drip line of trees indicated to remain.

2. Dispose of excess soil material and waste materials as herein specified.

PART 2 – PRODUCTS

2.1 SOIL MATERIALS

A. Suitable Excavated Material: Suitable materials from excavations for use in fill and embankments shall be free from shale, sod, large clods or hard lumps of earth, roots, trash or other debris; that has a liquid limit of less than 30 and a plasticity index of less than 20; and is readily compatible to specified density. No rock, cobbles or broken concrete exceeding 4 inches in maximum dimension shall be placed in compacted fill without the specified approval of the Engineer. No rock, cables or broken concrete

exceeding 1 inch in maximum dimension shall be placed in compacted fill of the utility trench.

B. Fill Material: Furnish imported earth material as necessary; if specified in the contract requirements or if the amount of suitable earth materials obtained from the job-site excavations is not sufficient to properly construct the required fill, subject to the approval of the Engineer or the Soil Engineer prior to use.

1. Submit imported fill material samples and testing results for the Engineer's approval prior to importing to the job site in accordance with Section 300-5 - BORROW EXCAVATION of SSPWC.

2. Imported fill material shall be free of foreign materials, vegetable growths, sod, rocks, expansive soils and all debris.

3. Lime for Treatment of Imported Fill Material: As here after specified in accordance with Section 301-5 – LIME TREATED SOIL of SSPWC.

4. Where fill material exhibits a wide variation in consistency, the Engineer may require blending to stabilize and upgrade the material as directed by the Engineer.

5. In landscape (planting area), fill shall not be saline or contain anything that would prevent normal plant growth: See LANDSCAPING, Section 02900 of the Project Manual for verification of required or approved fill material.

C. Base Material: "Crushed Aggregate Base" (3/4-inch maximum size aggregate) or "Crushed Miscellaneous Base" (1-1/2-inch maximum size aggregate), as specified in Section 200-2 - UNTREATED BASE MATERIALS of SSPWC.

D Pipe Bedding and Trench Backfill Material:

1. Use clean earth materials previously removed from job-site excavations or use imported fill materials as above specified free from clay, rock or gravel larger than 1-inches for utility trenches; and clay, rock or gravel larger than 2 inches in an area other than utility trench subject to the Soil Engineer's approval prior to use.

2. For sanitary sewer pipe**,** use Case I bedding material and extend 12-inch above said pipe, the balance of backfill to be approved clean earth materials.

3. For storm drain pipe, use approved washed sand and extend 12-inches above said pipe, the balance of backfill to be approved clean earth materials. For storm drain pipe section located beneath the sidewalk paving and connected to concrete curb outlet, sand bedding and backfill are not applicable.

4. For water pipe or pipe rise, use approved washed sand and extend 12-inches above said pipe, the balance of backfill to be approved clean earth materials.

5. For electrical conduits, use approved washed sand and extend 6-inches above said conduits, the balance of backfill to be approved clean earth materials. For utility service connection, provide bedding and backfill material in accordance with utility company's instructions.

6. For the landscape irrigation piping, use approved washed sand and extend 6-inches above said pipe, the balance of backfill to be an approved clean earth materials.

7. Conforming to applicable Sections of the Project Manual for the pipe bedding widths and depths.

E. Soil Cement: Use the soil-cement to form a dense, uniform mass conforming to the lines, grades and cross sections shown on the Contract Drawings. The soil cement shall be mixed, placed and compacted at least 95 percent of the relative compaction, in accordance with Section 301-3 of SSPWC and the instructions of the Soil Engineer.

F. Structural Backfill: The structural backfill shall have a sand equivalent of not less than 20 in accordance with Section 300-3.5 - STRUCTURAL BACKFILL and Section 300-4.5 - PLACING MATERIALS FOR FILLS of SSPWC, and placed and compacted to 90 percent of relative compaction.

G. Slurry Backfill: Slurry backfill shall be 60 E 0.7 (Class 100-E-100) and placed in accordance with Section 306-1.3.1 - BACKFILL AND DENSIFICATIONS of SSPWC.

2.2 WEED KILLER/SOIL STERILANT

Provide a dry, free-flowing, dust-free chemical compound, soluble in water, capable of inhibiting growth of vegetation, and approved for use on this Work by governmental agencies having jurisdiction.

A. Tinted for visual identification, shall be as follow:

1. United States Borax Corp. "Polyborchlorate" or equal.

2. Pacific Coast Borax Co. "Polyborchlorate".

3. Amspray Corp. "Pavex".

5. Elanco "Spike 801".

2.3 TOPSOIL

A. Where required by and shown on the Landscape Drawings or otherwise required, provide topsoil consisting of friable, fertile soil of loamy character, containing an amount of organic matter normal to the region, capable of sustaining healthy plant life, and reasonably free from subsoil, roots, heavy or stiff clay, stones larger than 2 inches in greatest dimension, noxious weeds, sticks, brush, litter, and other deleterious matter.

B. Obtain topsoil from sources within the project limits, provide imported topsoil from approved sources outside the project limits, or from both sources.

2.4 OTHER MATERIALS

A. Provide other materials, not specifically described but required for a complete and proper installation, as selected by the Contractor subject to the approval of the Engineer.

PART 3 - EXECUTION

3.1 SURFACE CONDITIONS

A. Examine the areas and conditions under which work of this Section will be performed. Correct conditions detrimental to timely and proper completion of the Work. Do not proceed until detrimental conditions are corrected.

3.2 WATER QUALITY PROTECTION

A. Eroded sediments and other pollutants must be retained on side and may not be transported from the site via sheetflow, swales, area drains, natural drainage, or wind.

B. Stockpiles of earth and other construction-related materials must be protected from being transported from the site by wind or water.

C. Fuels, oils, solvents, and other toxic materials must be stored in accordance with their listing and are not to contaminate the soil ~~n~~or the surface waters. All approved toxic storage containers are to be protected from the weather. Spills must be cleaned up immediately and disposed of in a proper manner. Spills may not be washed into the drainage system.

D. Excess or waste concrete may not be washed into the public way or any drainage system. Provisions shall be made to retain concrete wastes on-site until they can be appropriately disposed of or recycled.

E. Trash and construction-related solid wastes must be deposited into a covered receptacle to prevent contamination of rainwater and dispersal by wind.

F. Sediments and other materials may not be tracked from the site by vehicle traffic. The construction entrance roadways must be stabilized so as to inhibit sediments from being deposited into the public ways. Accidental depositions must be swept up immediately and may not be washed down by rain or by any other means.

G. Comply with requirements shown in Wet Weather Erosion Control Plan (WWECP).

3.3 SITE PREPARATION

A. Remove the upper 12 inches of existing soil including debris, roots and foreign materials under new yard paving areas, concrete walk, concrete curb and gutter prior to recompaction (to 95 percent relative compaction).

B. Excavate 6 inches of existing soil including debris, roots and foreign materials under the landscape area prior to recompaction (to 95 percent relative compaction).

C. Subgrades: Scarify for recompaction to a depth of 6-inches, bring to optimum moisture content and then recompact to at least 95 percent maximum density for subgrade as per ASTM D1557 - TESTED METHOD FOR LABORATORY COMPACTION CHARACTERISTICS OF SOIL USING MODIFIED EFFORT (56,000 FT - LBF/FT^3.). Prepare subgrade in accordance with Section 301-1 - SUBGRADE PREPARATION of SSPWC.

D. Holes and trenches existing on the job-site or resulting from Contractor's operations shall be filled with clean existing or imported earth materials (free of large clods and stone).

E. Unless indicated otherwise, construct fill in accordance with Section 300-4.5 - PLACING MATERIALS FOR FILLS of SSPWC in 8-inch layers and each layer compacted to 95 percent relative compaction and finished to elevations necessary to require cutting by fine grading. Inspection by Los Angeles City Building and Safety Inspector and the Soil Engineer are required prior to filling. Obtain minimum one compaction test for each layer or volume specified by Code.

F. Grading: To elevations of existing adjoining street surfaces, private property and surfaces immediately adjacent to the job-site limits indicated on the Contract Drawings; make all grades in a straight line from any point to any other perimeter point.

G. Dewatering:

1. Remove all water, including rain water, encountered during trench and sub-structure work to an approved location by pumps, drains, and other approved methods.

2. Keep excavations and site construction area free from water.

H. Dust Control: Use means necessary to prevent dust becoming a nuisance to the public, to neighbors, and to other work being performed on or near the job-site.

I. Moisture Control: Where subgrade or layer of soil material must be moisture conditioned before compaction, uniformly apply water to surface of subgrade, or layer of soil material. Apply water in manner to prevent free water appearing on surface during or subsequent to compaction operations.

1. Remove and replace, or scarify and air dry, soil material that is too wet to permit compaction to specified density.

2. Soil material that has been removed because it is too wet to permit compaction may be stockpiled or spread and allowed to dry. Assist drying by discing, harrowing, or pulverizing until moisture content is reduced to a satisfactory value.

J. Rework: Any previously compacted or tested subgrade and fill material, which are affected or disturbed, in the opinion of the Soil Engineer, by the inclemency of the weather such as rains, floods, earthquake or others shall be reworked, retested and re-inspected at no additional cost to the City.

K. Approval of Subgrade**:** By the Soil Engineer and the Los Angeles City Building and Safety Inspector prior to placing any fill.

3.4 GRUBBING AND GRADING

A. Remove entire roots under the footings and elsewhere to 2 feet below the new finished elevation of each surface.

B. Rough: Leave cut and fill sufficiently high to require cutting by fine grading.

C. Fine: To elevations required to ensure proper drainage or finished elevations indicated on drawings; finish elevations for planting areas as specified for top soil fill in Section 02900 – LANDSCAPING.

D. Subgrade Preparation: Required for all areas, other than filled or backfill areas, over which moisture barrier material, slabs, walks or pavement will be placed; in accordance with provision specified herein and Section 301-1 - SUBGRADE PREPARATION of SSPWC.

E. Inspection Required: Prior to placing base material, concrete or other materials.

F. Grading for Demolition Jobs: To specified elevations or elevations of existing sidewalks, adjacent property lines or surfaces immediately adjacent to the sites. Make all grades straight-line from any point to any other perimeter point.

G. Grading for New Asphalt Concrete Paving:

1. Rough: Cut and fill to be left sufficiently high to require cutting by fine grading and preparation of the surface for placement of the required select base material to thickness noted on the Contract Drawings or matching that of adjacent existing select base materials.

2. Fine: To exact elevations necessary for required new paving and paving repairs.

3. Testing and Inspection Required: Prior to placing of select base and asphalt paving materials.

3.5 EXCAVATING

A. General:

1. Excavation consists of the removal and disposal of materials necessary to establish required grade elevations and certified compacted fill for new construction pursuant to Section 300-2 UNCLASSIFIED EXCAVATION of SSPWC.

2. Excavated materials suitable for use as fill and/or backfill to be stockpiled where directed by the Engineer.

3. Non-approved and excess excavated materials to be legally removed and disposed of from the job-site.

4. Shoring, Bracing and Bulkheading of Trenches: All to be provided, installed and maintained where required to support trenches, See Subsection 1.6 of this Section. Conform to the requirements prescribed by the Los Angeles City Department of Building and Safety, CAL/OSHA, Section 02240 - SHORING and other Sections of the Project Manual.

5. Access to Trenches: Conform to Section 306-1.1.4 - ACCESS TO TRENCHES of SSPWC. Provide safe and suitable ladders, which project 2 feet above the top of the trench. It shall be provided for all trenches over 4 feet in depth. Minimum one ladder shall be provided for each 50 feet of open trench or fraction thereof, and be so located that the workers in the trench need not move more than 25 feet to a ladder.

6. Encountered Existing Underground Piping or Conduits: Immediately stop the trench operations at the point of encounter, notify the Engineer of such condition and submit support drawings to the Engineer for approval. The support drawings

shall be in conformance with the Los Angeles City Bureau of Engineering Standard Plans S-253, SUPPORTS FOR STORM DRAIN AND SEWER PIPES ACROSS TRENCHES, latest edition; CAL/OSHA and the utility company's requirements.

B. For Substructure Concrete:

1. When Earth Banks are Stable: To net sizes of concrete, except as otherwise specified or indicated on the Contract Drawings.

2. When Earth Banks are not Stable: Sufficiently wider than concrete to allow for forms and inspection thereof.

3. Where Rock Occurs: Surface to be leveled to a clean, even hard surface.

4. Depth: As indicated on Contract Drawings.

5. Excessive Width and Depth: Where excavation is made wider and deeper than required, fill with concrete specified in Section 03300 of the Project Manual, at Contractor's expense.

6. Inspection Required: After excavation and before placing concrete and before backfilling, the exposed soil or subgrade will be carefully inspected by the City of Los Angeles Building and Safety Inspector and the Soil Engineer to verify removal of additional unsuitable soil.

7. Protections and Shorings: See Subsection 1.6 of this Section.

8. Excavation for Grade Beams: Omit forms when sides will stand to a cut face, make such excavation 1-inch wider on each side.

9. When excavating adjacent to existing remaining structures, do so in a sequence as required and approved by the Engineer to avoid displacement or damage to the existing adjacent structure.

C. For Site Improvements:

1. Planter Areas: Excavate 6-inches of existing sub-soils as necessary to receive topsoil fill as specified in Section 02900 - LANDSCAPING.

2. For Concrete and Asphaltic Site Improvements such as concrete and/or asphalt pavements, concrete walkways, driveways aprons, concrete curb and gutter: Excavate to exact limits of such work without excessive removal of existing subgrade. Scarify and compact top 8 inches of subgrade and compact at 95 percent relative density. If the foundation subgrade materials are expansive, the materials should be overexcavated to a depth of 24 inches and replaced with non-expansive (i.e., expansion index of 20 or less) granular soils that are processed and compacted as recommended herein.

D. For Walls (including wall footings): Width not less than 18-in. from face of wall and sufficient for necessary forms, cribbing, bracing, inspection, and application for watering on walls, where required.

E. Conduit and Piping: Conforming to the requirements as specified on the drawings, Los Angeles City Plumbing Code, SSPWC and other sections of the Project Manual. Any piping with 8 feet or less cover or backfill, Case 1 Bedding Installations of Los Angeles City Bureau of Engineering Standard Plan S-251, latest edition, shall be used for all piping laying unless otherwise specified on the drawings or noted.

1. Depth and Width of Trench For Storm Drainage Piping: To depth necessary for installation of piping and construction of catch basin in accordance with requirements of Section 02545 - STORM DRAIN SYSTEM, PLUMBING Section in Division 15 of the Project Manual and as noted on the Contract Drawings. Provide minimum 12 inches side clearance from side of the piping. Make the sides vertical and the bottoms smooth, firm, level or uniformly sloped as required, slope to not exceed a downward slope of two horizontal to one vertical in a manner to prevent formation of water pockets in the pipe. For backfill or earth cover exceeded 8 feet, refer to Los Angeles City Bureau of Engineering Standard Plan S-251, latest edition, for maximum allowable trench width and bedding material. Unless specified otherwise, provide minimum 2 inches washed sand bedding below the pipe barrel.

2. Depth and Width of Trench for Plumbing Piping: As necessary for complete installations of the piping, fixtures and controls; provide minimum 12 inches side clearance from side of the piping; make the sides vertical and bottoms smooth, firm, level or slopes, as required by the code for proper drainage. Final elevations shown on Contract Drawings shall mean the invented pipe elevations. Pipe thickness and bedding thickness shall be used in determining trench depths. Conform to the requirements as specified in the Los Angeles City Plumbing Code and in Division 15 of the Project Manual. For backfill or earth cover exceeded 8 feet, refer to Los Angeles City Bureau of Engineering Standard Plan S-251, latest edition, for maximum allowable trench width and bedding material. Unless specified otherwise, provide minimum 4 inches washed sand bedding below the pipe barrel.

    a. If final elevation is not shown on contract drawings, place all piping to a depth no less than 24 inches.

3. Depth and Width of Trench for Electrical Conduit and Pull Box: As necessary for complete installation of the electrical conduits and pull box, unless specified otherwise, provide minimum 7 1/2 inches side clearance from the side of the conduit and pull box and 2 inches sand bedding in accordance with the Contract Drawings and requirements of the Utility Company.

    a. Conduit shall be placed to a depth of not less than 24 inches and 36 inches under the driveway.

4. Depth and Width of Trench for Landscape Irrigation Piping: As necessary for complete installations of the piping fixtures and controls; provide a minimum of 7 1/2 inches side clearance from the side of the piping and 4 inches washed sand bedding. Depth of piping shall be conformance with Section 02810 – IRRIGATION SYSTEMS of the Project Manual. All trenches for electrical conduit and wiring shall be in accordance with requirements listed hereinbefore.

F. Corrections: Required of all unauthorized excavations made below indicated depths, as recommended by the Soil Engineer at no added cost to the City.

3.6 FILLING

A. General: Construct in accordance with Section 300-4- UNCLASSIFIED FILL of SSPWC and place in layers not exceeding 8-inches thickness, compacted to a relative compaction of not less than 90 percent when tested in accordance with Section 211-2 - COMPACTION TESTS of SSPWC.

B. In Planting Areas and Tree Wells: If flooding method is specified for fill material, place saturated fill (exclusive of topsoil fill) prior to construction of adjacent improvements to minimize settlement as follows:

1. Planting Areas and Holes: Cultivate and soak the specified backfill mix for a minimum of two days using a common lawn soaker.

2. Tree Wells: Excavate a sump approximately 3-feet square by 3-feet deep and flood each sump for about 3 days.

C. Fill all holes on the existing job-site or resulting from site-clearing or demolition operations.

D. Topsoil Fill: Specified in Section 02900 - LANDSCAPING of the Project Manual.

E. Inspection Required: Prior to placement of fill materials. See Subsection 1.7A of this Section.

F. Concrete and Asphalt Site Improvements Walkways: Compact top 8 inches of existing subgrade and each 8" layer of backfill or fill material at 95 percent relative density.

3.7 BACKFILLING

A. Prior to Backfilling: Remove debris, trash and form materials from excavations.

B. Inspection Required: Prior to backfilling operations.

C. Placement of Backfill: In layers not exceeding 8-inches thickness, moisten to optimum moisture content and tamp until required 90 percent relative compaction is secured and finish to suitable elevations to provide for anticipated settlement and shrinkage.

D. Pipe Bedding And Backfill Over Underground Piping And Conduit: Place bedding and backfill material in conformance with provisions specified Subsection 2.1 (D) herein and in Section 02545 - STORM DRAIN SYSTEM, Division 15 - PLUMBING and Division 16 – ELECTRICAL of the Project Manual. Do not place backfill materials until the Inspector has inspected and approved the pipe installation. The bedding shall be compacted and shaped to form a firm base for the pipe and conduit. The initial backfill shall be placed in two lifts. The first lift shall be to the spring line of the pipe or conduit. The initial backfill shall be lightly compacted by light tamping or compacted by water densification method. The balance of backfill shall be placed in accordance with Subsection 3.8 (C) herein.

E. For Parking Lot or Demolition Jobs: Use clean material previously removed from excavations or use imported materials as hereinbefore specified subject to approval by the Inspector or Engineer.

F. In Planting Areas Holes and Tree Wells: After planting, cultivate and soak the specified backfill mix for a minimum of two days using a common lawn soaker if specified.

G. For Voids Left by the Removal of Sheeting, Piles and Similar Shoring Supports: Immediately backfill with structural backfill of clean sand or slurry backfill which shall be jetted into place to ensure a dense and complete filling of the voids.

H. Slurry Backfill: In areas where specified and/or around the utilities, vaults or other structures where the Soil Engineer determines that it is not practical to attain the required compaction by the mechanical methods or water densification, provide a trench slurry backfill 60-E0.7 (Class 100-E-100).

3.8 SELECT BASE

A. Place in accordance with Section 301-2 - UNTREATED BASE of SSPWC and "Soil Report" recommendations.

B. Locations: Place select base beneath concrete and asphalt concrete yard paving, beneath concrete driveway aprons and concrete gutters in yard areas, and elsewhere to thickness noted on the Contract Drawings.

C. Thickness: At least 4 inches under yard concrete paving, at least 4-inches under yard asphalt concrete paving.

NOTE: Place to thickness matching that of original thickness of select base under existing removed concrete or asphalt concrete paving and make ready to receive paving repair materials. Aggregate base shall be compacted to 95 percent relative density in accordance with Section 301-2 - UNTREATED BASE of SSPWC.

3.9 SOIL STERILIZATION

A. Apply specified soil sterilization material to areas to receive select base materials and all exterior area including concrete and asphalt paving, concrete walkway, concrete curb and gutter, by methods recommended by the manufacturer. Certify in writing that the material has been applied.

3.10 DISPOSAL OF EXCESS AND WASTE MATERIALS

A. Removal from City's Property: Remove waste materials, including unacceptable excavated material, trash and debris, and dispose of it off City's property in a legal manner and to conform with the requirements shown in Section 01572 – CONSTRUCTION AND DEMOLITION WASTE MANAGEMENT of Division 1 - General Requirements.

B. Provide written consent of the owner of the property upon which the surplus material is to be deposited, pursuant to Section 01572 – CONSTRUCTION AND DEMOLITION WASTE MANAGEMENT specified above and Section 300-26 - SURPLUS MATERIAL of SSPWC.

END OF SECTION

THIS PAGE INTENTIONALLY LEFT BLANK

SECTION 02433
BACKFILL GROUTING

PART 1 - GENERAL

1.1 DESCRIPTION

A. This section specifies requirements for designing and testing backfill grout mixes, and furnishing and placing backfill grout.

B. Definitions - Backfill Grout: Cement-based grout injected into the annular space between the initial support system of a tunnel excavation and the carrier pipe.

1.2 RELATED WORK

A. Section 01330, Shop Drawing/Submittals.

1.3 REFERENCE SPECIFICATIONS, CODES, AND STANDARDS

A. American Association for Testing and Materials (ASTM):

1. ASTM C33, Specification for Concrete Aggregates.

2. ASTM C109, Test Method for Compressive Strength of Hydraulic Cement Mortars.

3. ASTM C150, Specification for Portland Cement.

B. Standard Specifications for Public Works Construction (SSPWC).

1.4 SUBMITTALS

A. General: Make in accordance with the General Requirements Section 01330.

B. Product Data:

1. Manufacturer's product data sheets indicating mixing, handling, storage, and waste disposal requirements; personal safety equipment and first aid measures, and source of supply for each grout ingredient.

2. For each type and source of material:

a. Cement. Standard physical and chemical analysis.

b. Admixtures. Documentation showing that the proposed admixtures have a history of demonstrable satisfactory performance.

C. Working Drawings and Methods Statements:

1. Layout, equipment and details for staging, sequencing and performing/placing backfill grouting for each application. Include the means and methods for placing backfill grout, collecting and disposing of excess and waste material, collecting

and disposing of water resulting from grouting operations, and cleaning the surface of the carrier pipe.

2. Description of grouting equipment and facilities including:

    a. Supply and drilling equipment.

    b. Agitators or holding tanks.

    c. Mixers.

    d. Pumps.

    e. Grout delivery piping and manifolds.

    f. Hookup details including valves, packers, and gauges.

3. Details of the backfill grouting program:

    a. Single or multiple stages.

    b. Proportioning and mixing grout.

    c. Placement of grout including grouting pressure, pumping rate, lift height etc.

    d. Monitoring and control instrumentation.

    e. Maintaining grout pressures at allowable limits.

    f. Sequencing grouting and establishing basis and threshold values for modifying mixes.

    g. Furnishing, preparing, and plugging or patching grout holes.

    h. Collect and contain grout spillage and wasted grout.

4. Locations, configuration and design of bulkhead, including design calculations stamped by licensed civil or structural engineer in California. Lift drawings illustrates the proposed height of each of the grout lifts.

5. Design of pipe bracing and support to withstand dead weight, handling load, backfill grouting pressure and buoyancy force. Design calculations shall be stamped by licensed civil or structural engineer in California.

6. Incorporate details and integrate the means and methods for performing this work with other concurrent and/or related work. Supplement with scaled and dimensioned cross sections and profiles depicting arrangements and clearances, if necessary.

7. Calibration procedures for gauges and meters to be used in grouting operations.

D. Mix Design: Mix design data for each mix comprising type and proportions of each ingredient.

E. Quality Control:

1. Qualifications:

a. Grout Manager, in compliance with section "1.05 QUALITY ASSURANCE," herein.

b. Test laboratory proposed for calibrating and testing accuracy of master gauges and meters.

2. Certifications:

a. Certificates of compliance for materials listed under Part 2 of this Section.

b. Calibration certificates for gauges and meters to be used in grouting operations.

3. Quality Control Plans:

a. Methods for assuring uninterrupted grouting at pressures that do not exceed the maximum specified.

b. Methods for demonstrating that grout mixes meet design criteria. In addition to any other methods proposed by the contractor, at a minimum, the contractor shall:

1) Prepare a representative "trial" grout batch (one cubic yard minimum) in accordance with the approved grout mix design prior to placement of any backfill grout. The INSPECTOR will take six (6) representative samples of the "trial" batch for compression strength testing. The CITY will use the samples for 7 day and 28 day compression tests.

2) Upon approval of the "trial" batch, above, a "field trial" batch shall be prepared, utilizing the contractor's proposed field operations and equipment. The "field trial" batch will duplicate, as much as possible, actual field conditions. The batch shall be passed through the grout pump, the slick line or hose to be used, and any retarders or accelerants will be added to match planned field conditions. If a slick line is proposed for use, the "field trial" batch testing will take a sample that has passed through a slick line at least two thirds (2/3) of the maximum length planned. Grout samples of the "field trial" batch shall be taken and tested, in accordance with provisions herein, for compliance with contract strength requirements. The INSPECTOR will take at least six (6) samples and tests will be performed for 7 day and 28 day compressive strengths.

3) If grout samples of the "trial" of "field trial" batches fail design strength, as specified in section 1.06 herein, the contractor shall be required to propose and submit, for approval, a revised grout mix design that will meet contract strength requirements. The contractor shall also be required to repeat "trial" and "field trial" batch requirements, above, for any new grout mix design until the contractor demonstrates that its operations and the grout mix design can meet the contractual design strength requirements. All work herein, including work associated with revised grout mix design, shall be at the Contractor's cost.

4) Representative samples shall be 3-inch minimum grout cubes, the trays for which shall be provided by the contractor.

c. Method for demonstrating all space between the primary support and the sewer pipe is completely backfill grouted without any voids left behind.

d. Methods for cleaning tunnel of waste materials and debris, and treating excess or waste grout.

e. Design calculation or testing results demonstrating the heat of hydration from the backfill grouting will not negatively affect the final sewer pipe or initial support system.

f. Detail layout of pipe bracing and support to maintain the minimum clearance requirement, line and grade of the finished pipe after the backfill grouting operation.

g. Methods for identifying and performing remedial grouting to fill any voids that may occur.

4. Daily Records:

a. Records of strength tests on grout samples as soon as practicable after performing tests.

b. Shift report for each grout crew and for each shift, regardless of actual progress, and submitted no later than the beginning of the following working day. Include:

1) List of idle or inoperative equipment, and reason for downtime.

2) Grout installation records for each placement:

(a) Location (in tunnel stationing) and lift height.

(b) Grout pipe locations.

(c) Mix type and batch number.

(d) Grouting time spent on each hole broken down by quantity injected, injection pressure and pumping rate.

(e) Communication to other holes, if any.

(f) Panned areas against water inflow.

(g) Location of the advancing toe of the backfill grout.

3) Location of bulkhead and length of each stage of backfill grouting.

4) Crew size, employee classification, and work assignment.

5) Number and type of equipment used.

5. Notifications:

a. Seven (7) days prior to any proposed addition, deletion, or change to the scheduling of shift work.

b. Whenever sewer pipe movement is observed and detected during the backfill grouting operation.

6. Tests: Results of "trial" and "field trial" mixes herein and tests specified in Part 3.

1.5 QUALITY ASSURANCE

A. Retain a full-time, on site Grouting Manager with at least 10 years of related work experience, on similar projects, to manage the grouting program by designing, testing, and overseeing the installation of grout mixes of the type required.

1.6 DESIGN CRITERIA

A. General: Design grout mixes with appropriate properties to fully serve their intended purposes and proposed construction methods, with a minimum 28-day Compressive Strength: 300 psi.

B. Maintain a minimum 3 inches clearance around the sewer pipe.

C. Cellular grout will not be allowed if there is standing or running water more than one quarter of an inch (1/4") deep in the reach to be grouted and/or if there is more than one gallon per minute (1 gpm) of water per 100 feet of sewer entering the reach to be grouted.

PART 2 - PRODUCTS

2.1 MATERIALS

A. Cement: Conforming to ASTM C150, Type 2.

B. Sand: Conforming to ASTM C33. Sand in slurry concrete mix shall be in an amount no greater than 6 times the cement content.

C. Admixtures: Non-corrosive and compatible with initial tunnel support and carrier pipe elements.

D. Dry-Pack Materials: Use same source as materials used in concrete production or prepackaged product recommended by the manufacturer.

2.2 EQUIPMENT

A. Drilling Equipment: Utilize a rotary-percussive drill for all drilling and cleaning out of grout holes.

B. Slick Line: Minimum 5-inch in diameter.

C. Grouting Equipment:

1. General: Provide for continuous circulation of grout within the system.

2. Mixer:

a. Utilize a high-speed colloidal-type mixer with a tangential return flow from the mixer pump capable of providing a homogenized mix.

b. Size to ensure an uninterrupted supply of grout to the pump.

c. Provide with a means of accurately measuring and metering grout ingredients, including modifying the water/cement ratio.

3. Agitator:

a. Provide a separate agitator serving as a holding tank between the mixer and the pump.

b. Equip with:

(1) Baffles to induce turbulence.

(2) Rotating paddles to assure thorough mixing of the grout prior to and during injection.

4. Pumps:

a. Utilize helical screw rotor-type producing uniform flow without pulsation.

b. Equip with a water connection to facilitate flushing the system.

c. Equip with a pressure gage as specified herein.

5. Appurtenances:

a. Packers: Capable of sealing grout holes without leakage when grouting at the maximum specified pressure.

b. Hoses and Piping:

(1) Provide manifold system of valves and pressure gauge in the line at the collar of the hole to permit accurate control and monitoring of grouting pressure, bleeding, and regulation of flow.

(2) Size: 2-inch I.D., minimum.

(3) Refer to contract documents for requirements for carrier pipe injection ports.

c. Pressure gauges: Accurate to 1 psi over allowable grouting pressure range.

d. Volumetric measuring device: accurate to 1 gallon.

D. Maintain an adequate supply of spare parts and equipment to assure uninterrupted grouting operations.

PART 3 - EXECUTION

3.1 GENERAL

A. Grout that has not been placed within 2 hours of the time of initial mixing shall be removed from site for disposal.

3.2 PREPARATION

A. Any water leakage via initial support shall be:

1. Secure panning material against water leakage areas and divert the inflow to an invert drain or discharge line for removal from the backfill grouted area to designated facilities.

B. Install the sewer pipe to the proposed line and grade. Brace and support the pipe against any movement and to provide the minimum clearance specified. Each pipe joint shall be affixed to prevent excessive movement.

C. Construct full height bulkhead at the terminus of the targeted grout area. Perform each stage and lift of the backfill grouting with the advancing toe terminating against the bulkhead.

3.3 BACKFILL GROUTING

A. FROM INSIDE SEWER (CARRIER) PIPE:

1. Remove the protective lining, if any, at each grout port or grout hole location to expose the grout ports or holes where grouting is to be performed, and venting and communication may occur.

2. Perform grouting through a valve affixed to a pre-installed threaded pipe. When such a hookup cannot be practically accomplished, perform grouting through a packer placed in a hole drilled through the pipe. Drill out each grout hole from the inside of the carrier pipe to the area to be backfill grouted. Flush the hole with water and affix a valve to the grout hole and open the valve.

3. Perform grouting in a progressive manner from hole to hole without skipping holes, and from lower holes to higher holes except where otherwise specified. When the carrier pipe is 48 inches or greater, in diameter, there shall be at least three (3) grout ports per injection location, one on each side near the spring line and the other at the crown. Grout both spring line ports at the same location simultaneously. Injection locations shall be no greater than 50 feet apart. Do not pump grout into the port at the crown while pumping into the spring line ports at the same location. Relieve air and water through the valved, open, ungrouted holes downstream of the hole being grouted to the greatest extent possible.

4. Do not close any valved, open, ungrouted hole until:

   a. Grout of the same consistency as that being injected issues forth from the downstream hole.

   b. Grout issues forth at the volume rate being injected.

5. Grout each hole to refusal; i.e., when the total amount of grout injected into a hole is less than 0.5 ft3 as measured over a continuous two-minute period at the maximum allowable pressure per approved Contactor's submittal. Maximum allowable injection pressure shall not exceed carrier pipe and tunnel liner manufacturer's recommendation. The pressure shall be measured with a gauge near the end of the hose.

6. Remove grout valves after the grout has reached initial set and clean out the hole to a minimum depth of 1 inch from the intrados of the carrier pipe.

7. Repair grout holes and protective lining after grouting.

B. FROM OUTSIDE SEWER PIPE:

1. Install slick line or grout pipes along the full length of the targeted grout area. Extend the slick line or grout pipes through the bulkhead.

2. Perform grouting from downstream to upstream for each stage and lift of the grouting operation. Bury the slick line end or grout pipe in fresh grout material during placement operation.

C. VOIDS:

1. Install one slotted grout pipe along the entire length of the targeted grout area at the crown of the excavated tunnel. Perform backfill grouting of the crown to fill in any voids. Also maintain and provide access inside the sewer pipe for performing backfill grouting of other voids, panned area and invert drains until final acceptance of the project by the INSPECTOR.

2. All voids shall be filled with non-shrink grout of similar strengths of the backfill grouting materials.

3. For backfill grouting of panned area or invert drains, spacing of grout and vent holes shall be adequate to ensure all voids are filled.

4. Perform grouting of voids in stages. No work shall be performed until the backfill grout behind sewer pipe reaches 50 percent of its 28-day compressive strength.

5. Refer to SSPWC Section 306-3.8 for additional requirements.

3.4 CLEAN-UP

A. Promptly clean up grout spills. Clean and restore carrier pipe to as-original condition. Remove all materials bonding to the surface of the carrier pipe or cast-in-place concrete lining by chipping, bush hammering, grinding, or other acceptable means, as soon as practicable, without damaging carrier pipe.

3.5 FIELD QUALITY CONTROL

A. Strength Tests per ASTM C109: Take six each 3-inch minimum grout cubes for every 50 yds of each type of grout mixed. Test three samples at seven days and three samples at 28 days.

1. The backfill grouting installation shall be considered failed if the 28-day compressive strength of any of the grout cubes is below 250 psi.

2. In the event the 28-day compressive strength fails, the contractor shall submit, to the ENGINEER for approval, a remediation plan that identifies the limits of the failed backfill grout installation and any proposed corrective measures, which may include core drilling of failed backfill grout and testing.

3. Any remedial and/or corrective actions taken by or required of the contractor and/or any direction from the ENGINEER as a result of 28-day compressive strength failure shall not be considered extra work, and shall not be a basis for a changed condition or additional cost change order.

4. In the event no corrective measures are available or remedial efforts are unsuccessful in improving failed backfill grout installation (less than 250 psi), the following contract deduct shall be imposed: the greater of 1. $10/CF applied to the entire volume of the failed reach; or 2. Contractor's unit price bid amount for backfill grout installation applied to the entire volume of the failed reach.

5. In the event the 28-day compressive strength tests between 250 and 299 psi, the ENGINEER may impose, at its sole discretion, the following contract deduct:

$8/CF applied to the entire volume of the reach or 20% of the Contractor's unit price bid amount to the entire volume of the reach.

B. Gauges and Meters: Test field gauges and meters in the presence of the INSPECTOR no less often than weekly using master gauges and meters.

C. Grouting: Test backfill grouting placement in accordance with Contractor's submitted quality control plan for assuring full occupation of backfill grout material between tunnel liner and carrier pipe.

D. Perform remedial backfill grouting (if necessary) in accordance with Contractor's submitted quality control plan for remedial backfill grouting.

E. Pipe: If pipe movement is observed or detected during, or as a result of, backfill grouting operations, the contractor shall immediately cease grouting and submit, to the ENGINEER, for approval, a correction plan.

F. If the INSPECTOR suspects voids he/she may direct the Contractor to core at designated locations. If a void greater than one quarter of an inch (1/4") thick is found, the Contractor shall core additional locations until the limits of the void are found, at no additional contract cost. Further, the void(s) shall be grouted at no additional contract cost. If the INSPECTOR directs coring and no voids are found, the CONTRACTOR shall be reimbursed for the cost of the coring per GR 01254.

END OF SECTION

SECTION 02445

ACCESS PIT EXCAVATION SUPPORT SYSTEMS

PART 1 - GENERAL

1.1 DESCRIPTION

A. The Work of this Section includes support of temporary open excavations by means of soldier piles and lagging, structural steel walls and struts, gunite, liner plates, and timber. The CONTRACTOR shall be responsible for the design and selection of methods in conformance with the design criteria as specified herein.

B. The Work of this Section applies to temporary excavation support systems for demolition, construction of underground cast-in-place concrete structures, installation of buried pipelines, sliplined pipes, and pipe jacking and receiving shafts or pits.

1.2 RELATED WORK SPECIFIED ELSEWHERE

A. Section 01330, Shop Drawings / Submittals.

B. Section 01573, Excavation Shoring, Forms, and Falsework.

C. Section 01711, Site Investigation.

D. Section 02240, Sheeting, Shoring, and Bracing Systems.

1.3 SPECIFICATIONS AND STANDARDS

A. Except as otherwise indicated, the current editions of the following apply to the Work of this Section:

1. ASTM A6 Rolled Structural Steel Bars, Plates, Shapes, and Sheet Piling.

2. ASTM A 328 Steel Sheet Piling.

3. American Welding Society (AWS) D1.1 Structural Welding Code-Steel.

4. LABC Chap. 23 Wood.

5. West Coast Lumber Inspection Bureau (WCLIB) Grading Rules.

6. Western Wood Products Association (WWPA) Grading Rules.

7. AISC Manual of Steel Construction Fifteenth Edition (AISCMSC15).

1.4 CONTRACTOR SUBMITTALS

A. General: Prepare in accordance with Section 01330.

B. The following shall be submitted for review and acceptance in compliance with Section 01573 as one of the first items of Work:

1. The proposed excavation support system for each construction component where excavation support systems will be used, including results of the potholing investigation of nearby utilities.

2. Arrangement and details for each excavation support system, supporting design calculations, and construction methods to be used for the installation of each system at each access pit location, and subsequent removal.

3. Provide pit-specific detailed site plan and shoring in accordance with Specification Section 01573, Subsection 1.02J1, which clearly shows how the traffic requirements are being met. In addition, include all pertinent existing elements and information to properly review the submittals, such as maintenance holes, existing utilities, street center line, adjacent structures, property lines, etc.

4. Soldier pile installation methods, connection details, bracing preloading, and jacking procedures.

5. Depths below the main excavation bottom elevation to which the support system will be installed.

6. Elevations of ground surface, struts, and shores, as applicable.

7. Permissible depth to which excavation may be carried before supports must be installed and preloaded.

8. Load at full excavation depth to be carried by the various support system members.

9. Bracing loads for various stages of excavation, bracing installation and removal, and concrete placement.

10. Description of load path for all jacking and/or pushing activities within an access pit, including reaction forces of thrust blocks.

11. Details showing exact location at mating & adjoining surfaces where weldment of welded connections must be placed per AWS D 1.1.

12. Preloads as required.

13. Proposed method for providing waterproofing of pits to contain all sewage spills within the limits of excavations and avoid all sewer overflows.

14. Protection of existing facilities, including utilities and the existing host pipe structures.

15. Groundwater control system and dewatering.

C. The above submittal shall be coordinated with other shop drawing submittals for work specified elsewhere in which support of excavation is required.

D. The proposed method of installing sheet piling including sequence of installation, template, and equipment description.

E. Contingency plan for alternative procedures to be implemented if the excavation support system is found to perform unfavorably.

1.5 QUALITY ASSURANCE

A. Support of excavation Shop Drawings, including all calculations, shall be designed, signed, and sealed by a Civil or Structural Engineer, licensed to practice in the State of California and experienced in the design of excavation support systems.

B. All calculations and use of the excavation support system shall be in accordance with the manufacturer's recommendations, as applicable.

C. Shoring designs using 1/3 allowable stress increases shall only be applied for shoring systems expected to be in-place for a maximum of 90 days. The CONTRACTOR shall also limit the use of this increase per Caltrans Trenching & Shoring Manual, dated August 2011, pages 5-7 except part 2 of Section 5.3, such that the stress increase may be used when dynamic loading is present, but not vibratory loading. The stress increase may be used when traffic loading is present.

1.6 DESIGN CRITERIA

A. Shop Drawings with supporting calculations for the various excavation support systems shall be prepared in accordance with the following criteria:

1. Design the excavation support systems in "dry" or "wet" conditions and other requirements as described in Section 01573.

2. Design the excavation support system and all components to support the earth pressures, unrelieved hydrostatic pressures, utility loads, equipment, traffic, construction loads including impact, and other surcharge loads, as well as jacking and pushing loads, in such manner as will allow the safe and expeditious construction of the permanent structures, to minimize ground movement or settlement, and to prevent damage to or movement of adjacent buildings, structures, roadways, and utilities. Use the recommended design parameters in the Geotechnical Design Memorandum attached to the Reference Document or plan notes.

3. Design support members to resist the maximum loads expected to occur during the excavation, use, and support removal stages.

4. CONTRACTOR's Engineer prepared computations of load demands used in conjunction with engineered stamped Tabulated Data sheets shall be site specific – sole submission of Tabulated Data is insufficient. Supporting calculations of Tabulated Data sheets shall be made available upon request by the ENGINEER.

5. CONTRACTOR's Engineer computations of deflection of structural shoring elements including beams, lagging, tiebacks, walers, and others as applicable.

6. Design for staged removal shall conform to construction concrete placement, and backfill sequence shown. Design shall consider provisions for future construction, and limits on bracing level elevations as shown on the plans.

7. Pothole all affected utilities per Sections 01711 and 02501 in near vicinity of the proposed excavation prior to submitting the shoring layout and design.

8. No portion of the vertical excavation shall be left unsupported in Type C soils or in Type B soils having the characteristics of Type C.

9. Utilize a minimum factor of safety of 1.3 against bottom instability or heave, 1.5 against buckling for invert plugs, and 1.5 against piping.

10. Review of the CONTRACTOR's Shop Drawings and methods of construction by the ENGINEER does not relieve the CONTRACTOR of responsibility for the adequacy of the excavation support systems.

11. Use of sheet piling may not be acceptable in the vicinity of existing sewer or other fragile utilities and is subject to review and approval by the ENGINEER. Use vibration free installation technologies only.

12. No portion of the excavation support system's vertical face will be permitted to penetrate the design lines as indicated on the Drawings for the permanent concrete structure to be constructed within the excavation.

13. Vertical support capacity shall be provided for wall systems and internal bracing elements, and for loads due to vertical force components of tieback anchors, the weight of the structural systems themselves, and live load on any portion of the system.

14. If existing utility facilities interfere with the proposed method of support, the method shall be modified in a manner that will protect the facility and accommodate the proposed Work. Shop Drawings shall be revised and resubmitted along with design calculations required to account for the modified support method and to show the actual location of the existing utilities.

15. No trench box or shield systems will be permitted without specific approval of the ENGINEER.

16. Shoring shall fully support the sides of the excavation and existing utilities. At no time shall the lagging be supported by existing utilities.

17. Bracing or supporting excavation against the existing host or structures is not permitted.

18. See the rest of the Contract Documents for additional shoring & excavation requirements. Where a conflict exists, the more stringent requirements shall apply.

B. Steel Components:

1. Design and fabrication of steel components shall be as specified in AISCMSC15 and SSPWC.

2. Elements of the support system shall not be spliced unless approved by the ENGINEER.

3. All field welding shall be performed by Los Angeles Department of Building & Safety certified welders. All full penetration welds and fillet welds exceeding 5/16" in size shall be continuously inspected. All full penetration welds shall be subject to Non-Destructive Testing (NDT) per the Los Angeles Building Code.

C. Timber Support Systems and Members:

1. Basis for determination of minimum stress: LABC Chapter 23.

2. Lagging Design: Submit calculations for review and acceptance by the ENGINEER.

3. Any timber elements to be left in place shall be pressure-treated.

D. Bridging Over Shafts & Excavations:

1. The CONTRACTOR shall provide and incorporate the bridging of roadway and/or walkways over proposed shafts & excavation, as necessary, to comply with applicable Traffic Control Requirements. Bridging system may include support girders, precast panels, bracing, etc.

2. Bridging system shall have skid resistance in conformance with Standard Plan S-601 and shall be designed for HS-20 loading per AASHTO LRFD, 4th Edition with Caltrans Amendments.

3. If the shoring system of excavation provides support or is affected by surcharge due to the bridging system, such load effects shall be reflected in shoring design.

4. Bridging system design shall be provided as part of the shoring submittal.

1.7 SAFETY

A. Except as otherwise indicated, the following codes apply to the Work of this Section:

1. Title 8, California Administrative Code, Chapter 4, Subchapter 4, Construction Safety Orders, Article 6, Excavations, Trenches, Earthwork, Section 1542, Shafts.

PART 2 - PRODUCTS

2.1 MATERIALS

A. W & HP shapes, and other structural steel shall conform to the requirements of ASTM A6, SSPWC, and AISCMSC15, unless otherwise approved. Fabricated connections and accessories shall conform to SSPWC and AISCMSC15.

B. Concrete shall be as specified in SSPWC Section 201-1, as modified by the Brownbook.

C. Wood lagging shall be dimension lumber with minimum allowable stress of 1,100 psi.

1. The stress grade of the lagging shall be in conformance with LABC, Chapter 23.

2. Lumber shall be grade marked by WWPA or WCLIB with species and grade conforming to those shown on approved Shop Drawings.

PART 3 - EXECUTION

3.1 GENERAL

A. The shoring support system shall extend from the main excavation bottom elevation to a depth adequate to prevent lateral movement, to control groundwater seepage and to support the applied loads adequately. In areas where additional excavation is required below the main excavation, subgrade provisions shall be made to prevent movement of main excavation supports. Damage to existing utilities during installation of the excavation support system shall be avoided.

B. Excavate to the proposed invert elevation of the pit evenly on both sides of the host pipe. Report immediately to the ENGINEER the presence of any cracks or structural defects.

C. Sewage control measures shall be provided to prevent discharge of sewage from all excavations by:

1. Using a watertight shoring methods and placement of a concrete base slab.

2. Providing pit waterproofing covering for all the walls from top to bottom and at the invert using 6-inch-thick air-placed concrete with “6x6 W4/W4 WWF” minimum reinforcement at the centerline.

3. Apply sealant to joints or cracks that may leak.

D. Sawcut to remove the concrete cap and brick sewer crown section, where applicable. Do not use impact equipment.

E. Excavation Backfill:

1. Use Case IV bedding where indicated.

2. Per Geotechnical Design Memorandum or plan notes.

3. Allow for thickness of pavement or other surface layer(s) indicated in the Contract Documents.

3.2 JACKING AND USE OF VIBRATORY HAMMER

A. Use of vibratory hammers is prohibited.

3.3 DRILLED HOLES FOR PILE INSTALLATION

A. General: At its option, the CONTRACTOR may consider the use of steel H-piles for pile installation in drilled holes. However, the CONTRACTOR is cautioned that it shall design a shoring method for the piles and other shoring elements that will allow the complete removal of the entire lengths of Steel H Piles without vibratory methods before the excavation is completed and backfilled.

B. After Steel H pile removal, drilled holes may be backfilled with CLSM or 2-sack concrete slurry with 500 to 1,000 psi 28-day compressive strength.

3.4 SHEETING AND LAGGING

A. Sheeting and lagging shall be installed with no gap between the boards unless specifically approved. As installation progresses, the voids between the excavation face and the lagging or sheeting shall be backfilled with CLSM or sand rammed into place. Materials such as hay or burlap shall be used where necessary to allow drainage of groundwater without loss of soil or packing material. If gaps in the lagging are allowed, the gap width between lagging boards shall be limited to ½ inch maximum.

B. If unstable material is encountered, suitable measures shall be taken to retain it in place or otherwise to prevent soil displacement.

C. Extend lagging down to final subgrade unless specifically approved to do otherwise.

D. A sufficient quantity of material shall be on hand for sheeting, shoring, bracing, and other operations for protection of the Work and for use in case of an accident or emergency.

3.5 INTERNAL BRACING SUPPORT SYSTEM

A. All bracing support members shall be installed and maintained in tight contact with each other and with the surface being supported.

B. Bracing members shall be preloaded by positioning the struts and shores in accordance with loads, methods, procedures, and sequence as described on the approved Shop Drawings. Coordinate excavation work with bracing installation and preloading. Use steel shims and steel wedges welded or bolted in place to maintain the preloading force in the bracing after release of the jacking equipment pressure. Use procedures to produce uniform bracing member loading without appreciable eccentricities, overstressing, or support member distortion.

C. Struts shall be provided with intermediate bracing as needed to enable them to carry their maximum design load without distortion or buckling. Provide diagonal bracing as necessary to maintain the stability of the system. Web stiffeners, plates, or angles shall be provided as needed to prevent rotation, crippling, or buckling of connectors at points of bearing between structural steel members. Allow for eccentricities resulting from field fabrication and assembly.

D. Excavations shall be to a depth no more than 2 feet below the elevation of the support member about to be placed. The support member shall be installed and preloaded immediately after installation and prior to continuing excavation.

3.6 PERFORMANCE REQUIREMENTS

A. Maximum lateral displacement of the pit/shaft support systems shall be as follows:

1. For shoring systems adjacent to buildings within a 1V:1H gradient measured upward from the limits of the bottom of the excavation, deflection shall be limited to ½ inch maximum.

2. Within five (5) feet of utilities larger than 18 inches in internal dimension or existing improvements sensitive to movement, calculated shoring deflection shall be limited to 1/2 inch maximum. Allowable shoring deflection may also be limited for shoring near critical utilities or infrastructure or in other special circumstances as determined by the ENGINEER.

3. For wall systems at other locations, the maximum computed deflection of the wall at any stage of construction shall not exceed 1 inch.

4. The total of the allowable calculated deflection for secondary members (lagging or sheeting) added to the calculated deflection for primary members may be 50 percent greater than the limits identified when struts are placed no more than 5 feet apart on center, or piles are spaced no more than 8 feet apart on center.

5. If at any time the measured deflection exceeds the allowable maximum deflection, immediate corrective measures shall be taken by the CONTRACTOR to prevent any further deflections.

6. The CONTRACTOR shall stop the excavation work until corrective measures have been taken and the deflections have been reduced to acceptable limits as specified.

3.7 REMOVAL OF SUPPORT SYSTEMS

A. At the completion of pipe rehabilitation and the maintenance hole riser, clean up inside of the pit, backfill and restore the site to its original condition. Remove and dispose of all organic materials and debris (such as untreated timber, annular grout, trash, plywood, wood, grease, oils, and hydraulic fluids).

B. Unless otherwise indicated in this Specification, remove support systems to a minimum 8-ft below final grade in a manner that will maintain support as excavation is backfilled, at no additional cost to the CITY. Leave in-place deeper excavation support system elements that cannot be removed safely and without causing settlement or damage to the Work or adjacent property. The CONTRACTOR's engineer shall be responsible for determining if the excavation support system can be safely removed. Excavation support system elements that are left in place shall be at the CONTRACTOR's expense.

C. No wood lagging may be left in place.

D. Where removal is required wholly or in part, such removal shall be performed in a manner that will not disturb or damage adjacent new or existing construction or utilities. Fill all voids immediately with lean concrete, or other approved means.

E. All damage to property resulting from removal shall be promptly repaired at no cost to the CITY. The ENGINEER shall be the sole judge as to the extent and determination of the materials and methods for repair.

3.8 JOB CONDITIONS

A. Where ground support elements extend beyond the public right-of-way or beyond construction limits, negotiate the acquisition of a temporary easement with the affected property owner and provide for removal of ground support elements at no additional cost to the CITY.

END OF SECTION

SECTION 02446
SHAFT EXCAVATION SUPPORT

PART 1 - GENERAL

1.1 DESCRIPTION

A. This Section specifies requirements for designing, furnishing, installing, testing, and monitoring Contractor-designed shaft excavation support systems for maintenance hole shafts. Requirements for permeation grouting, jet grouting, slurry diaphragm walls and secant pile walls are specified elsewhere.

B. Definitions:

1. Soldier Pile and Lagging Wall System: A wall system wherein vertical steel beams (“soldier piles”) are installed from the ground surface, and lagging is installed to span between the beams as excavation proceeds.

    a. Soldier piles: Vertical steel beams installed using drilling methods, providing structural support for horizontal and vertical loads.

    b. Lagging: Ground support spanning between soldier piles or other structural elements.

2. Sheet Pile Wall System: Long structural steel sections with a vertical interlocking system that creates a continuous wall.

3. Liner Plate: Steel sections placed against the excavation wall and bolted together to form a complete circle.

4. Internal bracing: A system of wales and/or struts and necessary appurtenant members that provide lateral support for the shoring walls during construction.

5. Lattice Girder: Steel member fabricated from steel bars connected by welded steel lacing, expanded against the excavated ground surface, and encapsulated by shotcrete to form a composite steel/concrete structural member.

6. Steel Rib: Structural steel member curved to match the theoretical shape of the excavation and uniformly blocked to the excavated surface.

7. Steel Casing: Continuous steel casing without any openings used for the support of drilled maintenance hole excavations.

8. Groundwater Cut-off Grouting: Grouting performed from the ground surface prior to shaft excavation or from within the shaft during excavation to minimize the flow of water into the shaft.

9. Pressure Relief System: Reduce the existing hydrostatic pressure acting against shaft wall and/or invert by draining the outside water into the excavation for immediate removal.

10. Strip Drains: Fabric drains installed in a pattern behind lagging used to promote drainage from the excavation surface to the drainage system at the invert of the shaft or tunnel.

1.2 RELATED WORK SPECIFIED ELSEWHERE

A. Section 01330, Shop Drawings / Submittals.

B. Section 01572, Construction and Demolition Waste Management.

C. Section 01573, Excavation Shoring, Forms, and Fencework.

D. Section 01711, Site Investigation.

E. Section 02235, Dewatering.

F. Section 02240, Sheeting, Shoring and Bracing Systems.

G. Section 02501, Maintenance and Support of Utilities.

H. Section 03200, Reinforcement Steel.

I. Section 03300, Cast-in-Place Concrete.

1.3 REFERENCE SPECIFICATIONS, CODES, AND STANDARDS

A. This Section incorporates by reference the latest revision of the following documents.

B. California Code of Regulations (CCR): Title 8.

C. Code of Federal Regulations (CFR): 29 CFR 1926.

D. American Institute of Steel Construction (AISC): Steel Construction Manual.

E. AISC ASD Manual of Steel Construction, Allowable Stress Design.

F. American Petroleum Institute (API): API 13A, Specification for Drilling Fluid Materials.

G. American Society for Testing and Materials (ASTM):

1. ASTM A6 Rolled Structural Steel Bars, Plates, Shapes, and Sheet Piling.

2. ASTM A36, Standard Specification for Carbon Structural Steel.

3. ASTM A108, Standard Specification for Steel Bars, Carbon, and Alloy, Cold-Finished.

4. ASTM A307, Standard Specification for Carbon Steel Bolts and Studs, 60,000 psi Tensile Strength.

5. ASTM A325, Specification for Structural Bolts, Steel, Heat Treated, 120/105 ksi Minimum Tensile Strength.

6. ASTM A 328 Steel Sheet Piling.

7. ASTM A416, Standard Specification for Steel Strand, Uncoated Seven-Wire for Prestressed Concrete.

8. ASTM A563, Standard Carbon and Alloy Steel Nuts.

9. ASTM A572, Standard Specification for High-Strength Low-Alloy Columbium-Vanadium Structural Steel.

10. ASTM A615, Standard Specification for Deformed and Plain Carbon-Steel Bars for Concrete Reinforcement.

11. ASTM A706, Standard Specification for Low-Alloy Steel Deformed and Plain Bars for Concrete Reinforcement.

12. ASTM A722M, Standard Specification for Uncoated High-Strength Steel Bar for Prestressing Concrete.

13. ASTM A1011, Standard Specification for Steel, Sheet and Strip, Hot-Rolled, Carbon, Structural, High-Strength Low-Alloy, High-Strength Low-Alloy with Improved Formability and Ultra High Strength.

14. ASTM C31, Standard Practice for Making and Curing Concrete Test Specimens in the Field.

15. ASTM C39, Standard Test Method for Compressive Strength of Cylindrical Concrete Specimens.

16. ASTM C1107, Standard Packaged Dry, Hydraulic-Cement Grout (non-shrink).

17. ASTM D1056, Standard Specification for Flexible Cellular Materials - Sponge or Expanded Rubber.

18. ASTM D2216, Standard Test Method for Laboratory Determination of Water (Moisture) Content of Soil and Rock by Mass.

19. ASTM D4380, Standard Test Method for Density of Bentonitic Slurries.

20. ASTM F432, Standard Specification for Roof and Rock Bolts and Accessories.

H. American Welding Society (AWS): AWS D1.1, Structural Welding Code - Steel.

I. City of Los Angeles Department of Building and Safety Research Reports.

J. Standard Specifications for Public Works Construction (SSPWC) as modified by the City of Los Angeles Brown Book.

K. West Coast Lumber Inspection Bureau (WCLIB) Grading Rules.

L. Western Wood Products Association (WWPA) Grading Rules.

1.4 SUBMITTALS

A. General: Make in accordance with Section 01330.

B. Work Site Plan:

1. Detailed drawings illustrating the work site, layout, dimensions, equipment, utility distribution plans at shaft or maintenance hole locations, material stockpile and miscellaneous facilities. Include all existing features and information to allow for proper review of submittals including existing utilities (including depths determined from potholing), maintenance holes, vaults, structures, street centerlines, etc. Identify how traffic control requirements are being met.

2. Show structures, pipelines, and other improvements located within the area of influence of the excavation (within a 1 to 1 plane extending upward from the bottom of excavation).

C. Excavation Support System Plan:

1. Design calculations prepared, stamped, dated, and signed by a Professional Engineer registered in the state of California.

   a. Demonstrating the integrity of the design and conformance to the design criteria, taking into consideration all loads, sequences, and conditions during the various construction and removal stages.

   b. Demonstrating excavation support system deflections are within allowed tolerances.

   c. Showing adequacy of proposed groundwater control – Estimate the quantity of water inflow into the excavation per permeability data included in the GDR and demonstrate the proposed excavation means and methods will control the inflows to within the performance criteria at each work site.

2. Detailed drawings prepared, stamped, dated, and signed by a Professional Engineer registered in the state of California showing pertinent dimensions, spacing, and layout of components of the excavation support system. Include plan, elevations, sections, and details showing the arrangement, sequence of work, method of installation and removal.

   a. Depth below excavation bottom to which support system will be installed.

   b. Elevation of ground surface, struts, and shores, as applicable.

   c. Permissible depth to which excavation may be carried before supports must be installed and preloaded.

d. Full excavation depth load to be carried by various support system members.

e. Bracing loads for various stages of excavation, bracing removal and concrete placement.

f. Details showing exact location at mating and adjoining surfaces where weldment of welded connections must be placed per AWS D 1.1.

g. Preloads as required.

3. Detailed structural underpinning plan for supporting existing utilities and structures as required.

4. Protection of existing facilities, including utilities and structures.

5. Contingency plan for alternative procedures to be implemented if excavation support system does not perform as required.

6. Detailed procedure for abandoning shoring in-place and/or for removal of shoring elements without exceeding peak particle velocity vibration levels of 0.5 inches per second.

7. Details of the groundwater collection systems including pipe layout, sump, pump, manifolds, and risers to the receiving facilities.

D. Mix designs:

1. Cement grouts used with rock anchor and tieback.

2. Concrete for soldier piles.

3. Drilling slurry mix composition.

4. Grout used behind shaft ground support to fill voids and reduce water inflows.

E. Quality Control:

1. Qualifications:

a. CONTRACTOR’s design engineer.

b. Specialty Contractor(s).

c. Specialty Contractor’s superintendent.

d. Welders performing structural field welding.

2. Certifications:

a. Certified test results and welder certifications in accordance with AWS and Los Angeles Department of Building & Safety.

b. Certificates of Compliance by manufacturers for materials specified in Part 2 herein.

c. Calibration certificates for equipment and measurement devices to be used for installation and testing of the ground support.

3. Quality Control Plans:

a. Contingency plan describing corrective measures to be taken in the event of excessive ground movement or deformation of excavation support systems or in the event of groundwater inflows.

b. Methods for assuring the proper location, orientation, and position and depth of excavation support system in whole or in part with respect to other elements and the final arrangement of the Work.

c. Calculations of maximum allowable fabrication and erection eccentricities and corrective procedures for resolving or correcting misalignments of the support system.

d. For internally braced support systems, means for assuring proper preloading of compression members.

e. Methods for assuring that subsequent removal of excavation support systems is performed in a manner that does not disturb or harm adjacent facilities.

f. Mitigation measures when groundwater inflow exceeds the performance criteria.

4. Daily Records – Submit no later than the start of the following day:

a. Progress, resources used, and problems encountered and reasons therefore in furnishing, installing, and maintaining shaft excavation support systems.

b. Quantities of groundwater inflows from shaft and discharge from inside the tunnel.

5. Notifications:

a. Notify Engineer if exploratory borings indicate significant difference in subsurface conditions than indicated.

b. Notify Engineer immediately if any excavation support element is not in accordance with the requirements of the design.

c. Immediately upon encountering: deformations larger than predicted, distress, or damage to the excavation support system.

6. As-Built Data:

a. Survey location and limits of excavation support elements.

b. As-built documentation identifying all components installed. Include as-built certification of the Designer of the as-constructed excavation support system.

F. Designer coordination documentation:

1. Designer shall certify that the excavation support system is constructed per the applicable stamped, dated, and signed excavation support system of the Designer following completion of each support system and following any modifications by Contractor during construction.

2. Provide telephone numbers of responsible supervisors who can direct emergency repairs.

1.5 QUALITY ASSURANCE

A. QUALIFICATIONS:

1. Design drawings and calculations: Prepared, sealed, and signed by a California registered Civil or Structural Engineer who shall have at least 5 years of experience, all in the last 10 years, in the design of excavation support systems of the type used in the work.

2. Specialty Contractor(s) shall have a minimum of 5 years of experience in shaft construction using ground support proposed by the CONTRACTOR, and successful completion of no less than three recent, similar projects.

3. Specialty contractor Field Superintendence: Retain an on-site, full-time superintendent with no less than 5 years of recent, relevant experience in responsible charge of two similar projects performed under the employ of said Specialty Contractor.

4. Welding: Perform structural shop and field welding in accordance with AWS D1.1 using welding personnel certified to perform the work in accordance with AWS D1.1.

B. Acceptance Criteria: (NOT USED)

1.6 DESIGN REQUIREMENTS

A. Except as otherwise indicated, Title 8, California Administrative Code, Chapter 4, Subchapter 4, Construction Safety Orders, Article 6, Excavations, Trenches, Earthwork, Section 1542, Shafts applies to the Work of this Section.

B. Assess existing conditions, including contaminated subsurface conditions and adjacent property, for their possible effects on proposed temporary works and construction methods. Select and design such support systems, methods and details as will assure safety to the public, adjacent property and of the completed work, and which are compatible with anticipated subsurface conditions.

C. Design the excavation support system and all components to support the earth pressures, unrelieved hydrostatic pressures, utility loads, equipment, traffic, and construction loads including impact, and other surcharge loads, in such manner as will allow the safe and expeditious construction of the permanent structures, to minimize ground movement or settlement, and to prevent damage to or movement of adjacent buildings, structures, roadways and utilities.

D. Design an excavation support system in accordance with information provided in the contract documents

E. Determine water pressures and surcharge loads that may result from construction methods and design the earth support system for those additional pressures due to those loads.

F. Vertical support capacity shall be provided for wall systems and internal bracing elements, the weight of the structural systems themselves, and live load on any portion of the system.

G. Consider sequence of excavation and placement and later removal of lateral support elements in the design of the temporary earth support structures.

H. No portion of the excavation support system's vertical face will be permitted to penetrate the design lines as indicated on the Drawings for the permanent concrete structure to be constructed within the excavation.

I. Review of the CONTRACTOR's Shop Drawings and methods of construction by the ENGINEER does not relieve the CONTRACTOR of responsibility for the adequacy of the excavation support systems.

J. If existing utility facilities interfere with the proposed method of support, the method shall be modified in a manner that will protect the facility and accommodate the proposed Work. Shop Drawings shall be revised and resubmitted along with design calculations required to account for the modified support method and to show the actual location of the existing utilities.

K. Design Basis for Temporary Construction: Design ground support in accordance with the appropriate codes for steel or reinforced concrete. For ground support to be considered “temporary,” the excavation support system shall be dismantled within 90 days of erection or the engineer-of-record shall examine the system in the field and re-certify in writing the excavation support system at no more than 90-day intervals.

L. No trench box or shield systems will be permitted. Shoring shall fully support the sides of the excavation and existing utilities. At no time shall the lagging be supported by existing utilities.

M. Design all support systems for a maximum deflection of 1/2-inch.

N. Acceptable excavation support systems include:

1. Where excavation bottom is at least 3-ft above groundwater:

a. Full-depth soldier pile and lagging wall system.

b. Any watertight support system described below in Part 1.06.N.2.

2. Where excavation bottom is below groundwater:

a. Full-depth secant pile or diaphragm wall systems.

b. Solid steel sheet piling with pre-augering.

c. Gasketed liner plate support in combination with pressure relief system and/or groundwater permeation grouting.

3. For maintenance hole construction only:

a. Use of large diameter boring equipment in conjunction with ground stabilization slurry or steel casing.

b. Groundwater permeation grouting.

O. Tolerance:

1. Maintenance Holes - Finished centerline no greater than 3 inches offset finished tunnel center.

P. Groundwater Control Mechanism:

1. For each work area, evaluate the existing groundwater conditions per descriptions in GBR, Contractor's proposed means and methods of construction; shaft configurations, site restrictions per the requirements of this specification and Section 02235.

2. Design a groundwater control program to prevent the inflow of groundwater and to prevent unstable ground conditions from developing during shaft excavation. The Contractor shall determine their means and methods to achieve groundwater control at each work area. They may include:

a. Complete watertight structure with seal invert.

b. Water cutoff sheeting below excavation invert.

c. Chemical or cement permeation grouting.

d. Pressure relief system.

e. A combination of two or more methods.

3. Provide positive control of water inflows by means of permeation grouting or other suitable methods. Inflow shall be diverted in a sump collection system for removal.

4. Active dewatering outside the limits of the excavation including well points and/or deep wells are not allowed for shaft and maintenance hole construction.

5. Performance Criteria:

   Design, construct, and maintain an excavation support and groundwater control system as described herein at each shaft and maintenance hole location to achieve the required performance.

   a. The allowable quantity of groundwater inflow shall be no more than 10 gallons per minute.

   b. Discharge at each site shall be no more than the allowable quantities acceptable to discharge into the sewer or storm drain at all times.

   c. Shaft invert free of standing water.

   d. Maintain shaft and maintenance hole invert stability.

   e. Separate water discharges from inside the tunnel and at shaft bottom. Discharge tunnel water to sanitation sewer systems up to the maximum allowable capacity.

Q. Soldier Pile Wall Systems:

1. Locate soldier piles on no greater than 8-ft on center.

2. Values for pile embedment and bending moment shall be determined by checking the piles using both the Free Earth and Fixed Earth Support methods using the larger value from either method for the toe and moment.

3. Concrete mix for filling holes below shaft invert shall be 3,000 psi at 28 days.

4. Use lean mix with cement content of approximately one bag (94 lbs) per cubic yard to fill hole above invert.

R. Underpinning:

1. Install underpinning system supporting existing utilities or structures as required.

2. Calculated displacement of the affected structures shall be zero.

S. Bracing:

1. Design steel members in accordance with the AISC Allowable Stress Design.

2. When designing bracing for temporary construction loads, an allowable overstress not exceeding 20 percent of the value prescribed in the AISC ASD shall be permitted. No overstress is permitted in strut elements.

3. Maintain a maximum vertical spacing of 15-ft between bracing levels for internally braced excavations.

4. Allow for eccentricities created during the course of field fabrication and assembly.

5. Struts are to be designed for the maximum load produced by the following methods of analysis: Free Earth Support, Fixed Earth Support method, or Apparent Earth Pressure Diagram.

T. Toe embedment:

1. Below excavation invert, base toe embedment on loading diagrams for excavation support systems.

2. Apply a factor of safety equal to 1.5 or greater to the passive pressure coefficients or the calculated minimum toe embedment shall be increased by 30 percent.

U. Large Diameter Drilled Hole:

1. Toe embedment for large diameter maintenance hole steel casing shall not impede the advancement of tunneling excavation.

2. Backfill cased hole with 500 psi concrete at 7-day strength.

V. Bridging Over Shafts & Excavations:

1. The CONTRACTOR shall provide and incorporate the bridging of roadway and/or walkways over proposed shafts & excavation, as necessary, to comply with applicable Traffic Control Requirements. Bridging system may include support girders, precast panels, bracing, etc.

2. Design live loads shall be the larger of:

a. Contractor’s proposed equipment.

b. Surcharge aerial loads no less than 600 psf.

c. HS-20 loading for interim period when the street right-of-way is re-opened to traffic.

3. Bridging shall be skid resistance in conformance with Standard Plan S-601, and shall be designed for HS-20 loading per AASHTO LRFD, 4th Edition with Caltrans Amendments.

4. If shoring system of excavation provides support or is affected by surcharge due to bridging system, such load effects shall be reflected in shoring design.

5. Bridging system design shall be provided as part of shoring submittal.

6. Readily removable when entering or exiting the shaft at emergency egress locations.

1.7 SUPPORT SYSTEM REQUIREMENTS

A. The design, planning, installation, monitoring, and removal of all excavation support systems shall be accomplished in such a manner as to maintain the required excavation and the stability of the soils below and adjacent to the excavation.

B. Assess existing conditions, including property rights of adjacent property whether private or public, for the possible effects of proposed temporary works and construction methods.

C. Select and design support systems, methods, and details to assure safety to the public, adjacent property, and the completed work.

D. Support system stiffness and installation methods as required to conform to settlement restrictions indicated herein.

E. When the construction sequence of structures requires the transfer of bracing to portions of any new structure or to any existing structure, provide a complete design analysis of the expected impact of that bracing on the structure. This action shall in no way absolve the Contractor of responsibility of damage resulting from said bracing.

PART 2 - PRODUCTS

2.1 MATERIALS

A. Concrete: Conform to SSPWC Section 03300.

B. Concrete Reinforcement: Conforming to Section 03200.

C. Lagging: Comprised of precast concrete members, fiber-reinforced shotcrete, or steel plate. Treated or untreated timber is not permitted.

D. Structural Steel:

1. General: Conforming to ASTM A36 at a minimum.

2. Used Structural Steel: Used structural steel shall be in reasonable condition without holes or other imperfections which may compromise its ability to resist loads.

3. Soldier Piles: Piles shall be continuous, un-spliced sections.

4. Steel Ribs:

a. Fabricate from steel conforming to ASTM A36 at a minimum.

b. Bolts, nuts, plates, tie-rods, and fasteners conforming to ASTM A307.

c. Manufacture from wide flange-type sections rolled about the x-x axis, and of uniform curvature.

5. Lattice Girders:

a. Fabricate from steel bars conforming to ASTM A615M.

b. Welding conforming to AWS D1.1.

c. Bolts, nuts, plates, and fasteners conforming to ASTM A307.

6. Liner Plate:

a. 16 inches or 24 inches wide, four-flange corrugated liner plate with material conforming to ASTM A569, and every fourth plate equipped with a threaded grout port and threaded cast-iron or steel plug.

b. Supplied with 1.5 inch wide by 1/4" thick neoprene gaskets conforming to ASTM D1056 Grade RE45E1 and shop-affixed to the liner plate prior to delivery.

E. Shotcrete:

1. Conforming to SSPWC Section 03360.

2. 28-day compressive strength = 4,000 psi.

3. Shotcrete shall be reinforced with approved fibers.

F. Cement grout for void filling behind shaft support including behind steel liner plates:

1. Portland cement: ASTM C150, Type II.

2. Minimum compressive strength: 30 psi after 10 minutes; 1,500 psi at 28 days.

3. Flowability adequate for proper injection and consolidation.

4. The following admixtures may be used, subject to ENGINEER'S approval:

a. Admixtures controlling bleed and shrinkage, improving flowability, reducing water content, and retarding set.

b. Accelerators free of sodium silicate or other materials promoting corrosion in steel.

c. Water free of deleterious substances.

2.2 EQUIPMENT

A. General:

1. All equipment shall be capable of installing the proposed shaft excavation support in the ground conditions as described in the contract documents.

B. Solider Piling Equipment:

1. Install soldier piles by means of drilling through subsurface conditions. Equipment shall be capable of drilling, chiseling, or coring through nested cobbles and boulders in the alluvium or cemented zones in the bedrock as described in the GBR. Pile-driving equipment for installation of soldier piles is not permitted.

C. Steel Sheeting Equipment:

1. Capable of installing sheet piling to the required depth.

2.3 SOURCE QUALITY CONTROL (NOT USED)

PART 3 - EXECUTION

3.1 GENERAL

A. The shoring support system shall extend from the main excavation bottom elevation to a depth adequate to prevent lateral movement, to control groundwater seepage and to support the applied loads. In areas where additional excavation is required below the main excavation, subgrade provisions shall be made to prevent movement of main excavation supports. Damage to existing utilities during installation of excavation support system shall be avoided.

B. Prevent leakage, spillage, and other losses of slurry, excavated materials, tremie mixes, and grout. Promptly clean up such items regardless of location.

C. Prior to installing excavation support systems, establish the locations of existing utilities and substructures as indicated within an area extending 2-ft outside the shaft perimeter by potholing methods. Potholing shall be performed per requirements in Section 02501. Relocate or protect affected utilities in place.

D. Dispose of excavated materials in accordance with Section 01572.

3.2 INSTALLATION

A. General:

1. Maintain full-strength lagging, liner plate, or other continuous excavation support system elements within 4-ft of the in-progress excavated shaft invert elevation. Reduce this distance as required to comply with specified tolerances or to prevent sloughing.

2. Perform structural welding in accordance with the applicable clauses of AWS D1.1.

3. Maintain water inflows to no more than the allowable limits. Remove inflow water using sump pumping.

B. Soldier Pile Wall Systems:

1. Use drilling methods that will minimize over-excavation and loosening and caving of material outside designed pile diameter. Anticipate that boulders and/or obstructions may be encountered and provide procedures and equipment for their removal.

2. Install soldier piles to line and grade.

3. Where caving occurs, install temporary casing as necessary to maintain the hole until concrete is placed. Hole excavations shall have flat bottoms. Remove temporary casing while the concrete remains workable. Furnish at least 100 linear feet of ready-to-use temporary casing at the project site.

4. After pile has been seated plumb in the drilled hole, encase the portion below shaft invert with structural concrete by the tremie method either using gravity or concrete pumps. Fill the remainder of the hole with lean mix concrete.

5. Lag all unsupported ground at the end of each workday.

6. No excavation support systems shall be installed using impact or vibratory techniques. Obstructions such as boulders shall be cored by pile drilling rig.

C. Shotcrete: Perform in accordance with SSPWC.

D. Steel Ribs and Lattice Girders:

1. Erect steel ribs and lattice girders true to line and grade. Apply shotcrete as necessary to firmly and uniformly brace the steel set or lattice girder against the excavated surface so that point loading does not occur anywhere on the steel set or lattice girder.

2. Secure steel sets against movement and distortion using tie rods and collar braces, as required.

E. Liner Plate:

1. Clean flanges to assure complete bearing of mating surfaces.

2. Assemble and bolt liner plate, providing positive support until a complete ring has been erected.

3. Stagger joints in adjacent rings.

4. Fill the annulus behind the liner plate with an approved grout mix and by completing backfill grouting within two erected courses of liner plate.

F. Internally Braced Support Systems:

1. Obtain full bearing between internal bracing system elements and excavation support systems using shims, plates, and other means.

2. Include web stiffeners, struts, plates or angles as needed to prevent torsion rotation, crippling, or buckling of connections and points of bearing between structural members.

3. Preload struts by jacking in place against soldier piles and wales, applying a nominal pre-load of 50 percent of the maximum design load expected to occur during excavation or removal.

G. Maintenance Hole Shafts:

1. Large diameter drill is acceptable for advancing a vertical hole of adequate diameter for housing the maintenance hole shaft excavation.

2. Support the maintenance hole excavation with slurry at all times and keep top of slurry at least 5 feet above the groundwater table.

3. Additional ground support shall be provided using full length steel casing when:

a. Caving ground is encountered.

b. Center of the maintenance hole excavation is within 20 feet of any structure.

3.3 FIELD QUALITY CONTROL

A. General:

1. Monitor and record daily readings during excavation of the shafts to detect any vertical or horizontal movement. Monitor and record weekly readings following completion of the excavation to the required depth. Submit a copy of all readings to the Engineer at the end of each week. Notify the Inspector and the Engineer immediately for any excessive movements or deflections.

2. Maintain movement within limits specified below:

a. Horizontal Displacement shall not exceed 1/2inch at any stage of construction.

b. Vertical Displacement shall not exceed 1/2 inch.

3. Suspend excavation and perform stabilization measures, as required, to meet requirements of the excavation support system designer.

4. Re-commence excavation activities only after corrective measures have been implemented and are proven satisfactory.

B. Internally Braced Systems:

1. Provide means to determine actual amount of preloading with an accuracy of ±5 percent.

C. Compression Test – Sample at the injection point:

1. Take two sets of four samples for every 150 cubic yard batched, but no less than two sets per day.

2. Test two cylinders at 7 days and two samples at 28 days.

3. Assist CITY personnel with obtaining test samples for any testing performed by CITY-approved laboratory. Required laboratory and field testing shall be performed at no additional cost to the CITY.

3.4 MAINTENANCE OF EXCAVATION SUPPORT SYSTEMS

A. Keep on hand sufficient quantity of materials to maintain a functioning support system, and for use in case of emergency.

3.5 REMOVAL

A. Backfill shafts with CSLM or Structural Backfill as defined by the SSPWC or as indicated.

B. Remove shaft excavation support systems to a minimum depth of 10-ft below the final ground surface except as otherwise indicated:

1. Perform in a manner that does not disturb or harm adjacent facilities. Removal procedures shall not induce peak particle velocity ground vibrations in excess of 0.5 inches per second.

2. Fill voids with shaft backfill material meeting requirements of SSPWC Class 490-C-1000P.

C. Remove CONTRACTOR's temporary utilities and facilities from work sites.

D. Unless otherwise indicated, restore pavement and surface conditions to preconstruction conditions.

END OF SECTION

THIS PAGE INTENTIONALLY LEFT BLANK

SECTION 02455
CAST-IN-PLACE DRILLED PILES

PART 1 - GENERAL

1.1 DESCRIPTION

A. Principal Work in this Section:

1. Provide cast-in-place drilled piles, complete, in accordance with Contract Documents.

B. Related Work Specified Elsewhere:

1. Section 03200 - Concrete Reinforcement.

2. Section 03300 - Cast-In-Place Concrete.

1.2 SYSTEM DESCRIPTION

A. Work Includes, but is not limited to, the following:

1. Excavation for drilled piles, including soil and rock excavation, removal of existing concrete slabs, foundations and other obstructions as required.

2. Installation of temporary steel casing for protection of the tops of holes to prevent caving and material entering the hole.

3. Reinforcing steel, furnishing and installing reinforcing steel including reinforcing extending above top of shaft and dowels, as required.

4. Concrete for drilled piles, including mix designs with required supporting testing, furnishing and placing.

5. Disposal of excavated materials.

6. Establishing surveyed elevations and surveyed locations from established building line monuments which will be furnished and installed by a registered land surveyor.

7. Maintaining diameters of shafts.

8. Maintaining top of shaft elevations including removal of laitance.

9. Excavation and filling of trial drilled piles in advance of production drilling for the purpose of review by Contractor and City of Los Angeles Geotechnical Engineering Division of caving potential, equipment suitability, etc.

1.3 QUALITY ASSURANCE

A. Quality Assurance: Prepare and execute Quality Assurance program including concrete mix designs, materials report, sampling, and detailed shop drawings for reinforcing which provide no opportunity to complete unsatisfactory cast-in-place drilled pile work. Perform retesting or evaluation by Quality Control personnel due to deficient work, and similar work at no additional cost to Owner.

B. Quality Control: Cast-in-place drilled piles work may be subject to evaluation and tests in shop and field by others. Evaluations and testing undertaken by others is strictly for random evaluation. Extent, duration and amount of testing or evaluation is entirely at discretion of others. Use of testing services, or execution of testing or evaluation service by others shall in no way relieve Contractor's sole responsibility to furnish materials and construction in full compliance with Contract Documents.

C. Qualifications:

1. Contractor engaging work of this section shall have minimum fifteen years of experience in work of similar scope and nature to that specified.

2. Contractor shall employ labor and supervisory personnel at least equally experienced in work of similar scope and nature to that specified.

D. Testing Agencies:

1. Inspection/Testing: Coordinate and provide ample notification to the Geotechnical Engineering Division for observation of excavating and construction of the piles and to Contract Administration for inspection and testing of reinforcing and concrete work to allow the construction to proceed in a continuous operation.

2. Contractor's Concrete Testing Agency: Contractor shall employ at his own expense, testing laboratory acceptable to Architect, to design concrete mixes, conduct tests and submit reports as are hereinafter specified.

3. Geotechnical Engineering Division: Owner will retain, at his own expense, a geotechnical consultant, to conduct tests and inspections of soil conditions and submit reports as are hereinafter specified. Owner's geotechnical consultant will be responsible for inspections and for conducting and interpreting tests. Inspection will take the form of full-time inspection of pile excavation and concreting operations.

1.4 REFERENCES

A. Except as modified by governing codes and Contract Documents, comply with applicable revisions and recommendations of the following:

1. ACI.

2. ASTM.

3. PCA.

1.5 SUBMITTALS

A. Product Data: Submit Product Data and installation instructions for the following items in accordance with Section - SUBMITTALS. Include laboratory test reports and such other data required to show compliance with Contract Documents.

1. Fly ash.

2. Plasticizing admixture.

3. Aggregate for stone concrete, including sodium sulfate soundness test (ASTM C88) and sieve analysis.

4. Reinforcing steel.

5. Portland cement (including certified mill test reports).

B. Shop Drawings: Submit Shop Drawings for the following items in accordance with Section - SUBMITTALS.

1. Provide Shop Drawings which show details and layouts of reinforcing steel in accordance with Section 03200- Concrete Reinforcing. All tie reinforcing shall have 135-degree hooks around vertical reinforcing at each end of each tie or each piece of continuously wound tie. Vertical reinforcing shall be positioned around pile to clear and coordinate with grade beam reinforcing and anchor bolts/column dowels.

C. Furnish detailed descriptions of construction procedures, equipment, temporary liners used and drilling methods.

D. Certificates of Site Examination: Submit, before proceeding with the work, one copy of certification in acceptable form stating that careful examination has been made of the site, existing structures, records of utility lines, test boring records, subsurface exploration reports, drawings and specifications, signed by the Contractor's Installer and the Contractor.

E. Test Reports: Test and inspection reports shall be submitted in accordance with Section QUALITY CONTROL by the following testing agencies; with one copy to Contractor and others as indicated.

1. Contractor's Concrete Testing Agency:

a. Report and certification of aggregate for stone concrete, including sodium sulfate soundness test (ASTM C 88) and sieve analysis. (may be omitted if available from manufacturer).

b. Concrete design mix reports, listing all mixes required together with test results.

2. Owner's Concrete Testing Agency:

   a. Concrete test reports, indicating slump and test strengths at 7 days, 28 days and 56 days (if required) for test samples obtained, together with pertinent information and certification of compliance with strength requirements.

   b. Ready-Mix Plant Inspection Reports, showing location of plant; mix number and strength; proportioning; source, type and amount of cement; admixtures; aggregates; water added and total water used; slump; air content; capacity and condition of mixing trucks; per cent of capacity loading practice; condition of batching equipment; period of inspection and number and size of batches observed.

3. Geotechnical Engineering Division:

   a. "Drilled Piles Field Record" for each pile recording actual geotechnical data, including the actual depth or elevation of bottom, elevation of bearing strata (if applicable), result of all test performed, seepage of water, variation of shaft diameters (from those shown), and general description of bearing strata over the length of piles shaft. If rock is encountered, indicate depth to rock, and socket depth. Specific confirmation of the allowable load for the pile shall be included.

4. Record drawings: Update record drawings, specified in Division 1, to incorporate the above information including the final center line location of the top of each pile.

1.6 PROJECT CONDITIONS

A. Environmental Conditions:

1. Contractor shall examine the site, drawings, records of existing utilities and construction, record of tests borings, and subsurface exploration reports to determine conditions under which the piles will be installed. Records of test borings are for information only and are not guaranteed to represent all conditions that will be encountered.

2. An investigation of the soils has been made for the site which contains partial information on existing conditions and potential conditions on site for drilled piles work. The intent of these specifications is to include all recommendations given in the report and subsequent amendments, except where the Contract Documents are specifically more stringent.

B. Protection:

1. During excavation of piles, openings shall be properly protected and covered when work is not in progress. Suitable fences, lights, etc., shall be provided as required. Contractor shall provide a protective cage or casing for inspection and testing of piles and to protect workmen during hand excavation or other operations requiring entry into shaft. The Contractor shall provide access down hole with proper safety equipment for the Geotechnical Engineering Division. Coordinate with the Geotechnical Engineering Division for required safety apparatus, prior to inspection. Holes shall be covered and protected, with casing in place, while tests are being made. Shells as required for construction loads shall satisfy safety requirements of the construction and regulatory agencies. Contractor shall have adequate gas detection devices on site at all times with personnel trained in their proper use. Contractor shall make tests for gas or noxious fumes prior to entry into the shaft and provide continuous monitoring when men are required to be in the shafts.

2. Contractor and piles installer shall take particular measures when drilling and constructing along existing buildings. Take all necessary measures to brace, shore, underpin and any other work or sequences to ensure maintaining the strength, stability and cause no damage to existing buildings.

3. Prior to any excavation adjacent to the existing building, record and photograph all existing conditions and send a report to the Owner. Monitor by measurement and record and photograph on a regular basis during construction and send reports to the Owner.

C. Contractor's bid shall be based on construction of piles to length shown on the drawings. Adjustment will be made on net variation of total quantities, based on the design dimensions for shafts. There will be no additional compensation for excavation or concrete due to overcutting or over lengthening of shafts (i.e., in any dimension) resulting from machine methods of excavation, or any other cause, unless directed by the Engineer in writing.

PART 2 - PRODUCTS

2.1 MATERIALS

A. Portland Cement: ASTM C150, Type II normal Portland cements.

B. Fly Ash: ASTM C618.

C. Water Reducing and Plasticizing Admixture: ASTM C494, type and quantity recommended by manufacturer depending upon conditions at project site.

D. Aggregate for Stone Concrete shall comply with ASTM C 33 size 467 for placement "in-the-dry" and 3/4 inch maximum for tremie concrete and the following:

1. General: Aggregates when subjected to 5 cycles of sodium sulfate soundness test (ASTM C 88) shall not lose more than 15% by weight. Aggregates for the entire job shall come from the same source unless a change is acceptable to the Engineer.

2. Fine Aggregates: Natural or artificial hard, clean sand.

3. Coarse Aggregates: Gravel or crushed rock with clean, hard, uncoated particles.

E. Mixing Water: Clean, fresh and free from deleterious substances which would impair the work.

F. New Billet Steel Bars: ASTM A 615, Grade 60.

G. Temporary Steel Casing: Temporary steel casing shall be constructed of ASTM A36 steel plate. Longitudinal and transverse joints shall be full butt welds forming temporary casing to length and diameter required to control caving of shafts during excavation and to facilitate construction of the piles to the required diameter and length.

H. Ready-Mixed Concrete: ASTM C94, of strength as shown on drawings.

I. Miscellaneous Materials or Accessories shall be provided as specified hereinafter under the various items of work, as indicated on the drawings, and as required for good construction practice.

2.2 MIX DESIGN

A. Contractor's Concrete Testing agency shall design the mix for each type of concrete required in accordance with the requirements of the specifications and drawings. Strength requirements are as noted on drawings. Design mixes shall obtain strength (as determined by test cylinders) at least 15% higher than specified. Allow a minimum of 40 days prior to placing concrete for this work.

B. The adequacy of the design shall be verified by tests on a minimum of 9 cylinders; 3 tested at 7 days, 3 at 14 days, and 3 at 28 days in accordance with ASTM C192 and ASTM C39, and by a slump tests in accordance with ASTM C143.

C. Contractor shall prepare and submit a complete list of design mixes required for the project, together with test results, to Engineer for review before any concrete is placed. Design mixes may be initially submitted for preliminary review with the 7 and 14 day test results but the 28 day test results shall be reported prior to placing concrete.

1. The mix design submittal shall contain at least the following information: gradations for coarse and fine aggregate, cement type, aggregate sources, cement source, admixture data sheet from manufacturer's brochure, mix proportions, strength test results, actual slump of tested concrete mix, batch plant, etc. The submittal shall be signed by the preparer and the registered Civil Engineer experienced in concrete materials that is responsible for the mix design.

D. Contractor shall immediately notify the Owner's Concrete Testing Agency and Engineer if, at any time during construction, the concrete resulting from the mix design proves to be unsatisfactory for any reason such as: Too much water, lack of sufficient plasticity to prevent segregation, honeycomb, etc.; or insufficient strength. Contractor shall modify the design, subject to the Engineer's review, until a satisfactory concrete is obtained.

E. Stone Concrete: Proportion in accordance with the following minimum requirements:

Design Strength psi	Cement Content* Sacks/Cu.Yd.	Water. Max Gal./Sack	Max.** Slump
4000 psi	5-3/4	5.5	5" min to 7" max

* A plasticizing admixture shall be used and minimum cement requirements may be reduced by 1/2 sack per cu. yd. where a maximum of 75 lbs. of fly ash is substituted per cu. yd.

** Increase slump, provide retardation, etc. as necessary or required for excavation utilizing temporary liners.

F. Tremie Concrete: Proportion in accordance with the following minimum requirements:

Design Strength psi	Cement Content	Maximum Slump
5000 psi	705 lbs.	7 to 9 inch

* A plasticing admixture shall be used and minimum cement requirements may be reduced by 47 lbs. Where a maximum of 75 lbs. of fly ash is substituted.

PART 3 - EXECUTION

3.1 PREPARATION

A. Field Measurements: Verify dimensions before proceeding with work. Obtain field measurements for work required to be accurately fitted to other construction. Be responsible for accuracy of such measurements.

B. Equipment: The Contractor shall use equipment of adequate capacity and proven methods for all drilled piles construction work including rock drilling. Drilling shall be accomplished by means of a power driven rotary bucket or auger type foundation drilling machine designed to excavate a plumb cylindrical shaft.

C. Methods: The drilling sequences and procedures shall be such as to produce negligible loss of ground as well as squeezing of the hole and consequent settlement. The contractor shall develop his construction procedure using the guidelines described and provide a description of the procedure for review and approval by Geotechnical Engineering Division.

3.2 INSTALLATION

A. Excavation:

1. General: Excavated materials shall be removed from the site or utilized on the site in locations in accordance with construction activities as required and approved by the Engineer. The area shall at all times be kept clean and free of spoil and other debris which could affect the progress or safety of the work.

2. Machine methods shall be used for the excavation of pile shafts. Temporary steel casing shall be used to prevent caving of soil and to reduce seepage unless otherwise approved by the Engineer. The diameter of the bore of the hole shall be such as to reduce the annular space between the wall of the hole and the steel casing to a minimum.

    a. Casing cutting, loss of temporary casing or portion thereof, extension/addition of piles, etc. shall be at expense of the Contractor.

    b. Piles shall not be excavated closer than 4 diameters on center unless adjacent piles have been completed 24 hours.

    c. Piles Shafts: Piles shall be founded in and on bearing strata capable of developing the minimum allowable pile capacity specified on the drawings. If test results indicate that the bearing strata is incapable of providing the required allowable capacity values, the shaft length may be advanced as directed by the Geotechnical Engineering Division.

    d. The Geotechnical Engineering Division shall observe all pile excavating in order to report quality of bearing strata, penetration into bearing strata, conditions at the bottom and sides of the piles as well as report the confirmation of design allowable pile capacity.

B. Installation:

1. Placing Concrete:

    a. Do not start placing of concrete until the excavation and reinforcing for the whole unit to be placed has been completed, cleaned and dried, and inspected and approved by the Geotechnical Engineering Division.

    b. Provide adequate runways, chutes, tremies and other means of conveying concrete into place. Use tremies for placing concrete. Use vertical pipe near the center of the piles extending into the concrete to control concrete placement.

    c. Concrete placed in dry holes shall not be allowed to fall freely more than 5 feet. Concrete pumps, tremies or other such devices shall be used to comply with these requirements.

    d. Concrete shall always be placed under water using concrete pumps and hoses, or equal, extending to the bottom of the pile excavation. A head of at least 4 feet of concrete shall always be maintained over the end of the concrete pump pipe so that water and disturbed soils are forced from the excavation.

    e. Temporary casing shall be raised slowly as the pile excavation is filled with concrete, provided that the bottom of the casing is always a minimum of 5 feet below the level of the concrete.

f. Concrete placement shall continue until suitable concrete extends to the top of the pile excavation. The tremie or concrete pump pipe shall be slowly raised as the pile excavation is filled with concrete, provided that the bottom of the pipe is never more than 5 feet above the level of the concrete.

g. Piles spaced closer than 3 pile diameters center to center shall be drilled and concreted alternately, allowing at least 12 hours after concrete placement in one pile before drilling of an adjacent pile.

h. Place concrete immediately after mixing, and in no case, more than 60 minutes after water has been added. Continue the depositing of concrete in a continuous operation until completion of the piles to top of shaft, and in no case suspend the placing of concrete of a pile more than 30 minutes. Consolidate the concrete by vibrating the top 25' (7.6 m). Laitance and excess water shall be removed.

i. Concrete for piles shall be placed "in-the-dry" unless placement under bentonite or other equivalent slurry is determined by the Contractor to be necessary and confirmed by written approval of the Geotechnical Engineering Division. Standing water in puddles deeper than one (1) inch, loose soil and debris shall be removed from the bottom of shafts before concrete placement. If placement under slurry is necessary, use tremie concrete mix of 1000 psi higher strength than specified on the drawings which is for "in-the-dry" placement.

j. Place concrete in piles immediately upon complying with the foregoing requirements.

C. Installation Tolerances:

1. The maximum allowable variation of the center of the top of any piles from the required location shall be 4% of the shaft diameter or 3" (75 mm), whichever is less. The shaft shall not be out of plumb by more than 3 inch in 25 feet. If these tolerances are exceeded, additional work shall be performed as directed by the Engineer, at the Contractor's expense.

2. Piles shall have a minimum shaft diameter equal to that shown on the drawings. If the piles diameter is reduced, the Contractor shall design and furnish additional or corrective construction, acceptable to the Engineer, to compensate for loss of piles section, at no extra cost. The proposed corrective construction which may include additional piles, caps and grade beams shall be submitted to the Architect for review.

D. Corrective Methods:

1. If observations and/or test results of the Geotechnical Engineer indicate that the soil is not capable of providing the required minimum allowable piles capacity value, the shaft length shall be advanced as directed by the Geotechnical Engineer, with the concurrence of the Architect.

2. Loose materials or free water in quantities sufficient to cause settlement or affect concrete strength, as determined by Geotechnical Engineer shall be removed from the bottom of the shaft.

3. If water or other conditions are found which make excavation through sand or silt strata dangerous to personnel or such as to cause excessive inflow of silt or sand creating voids outside the piles, the work shall be continued using an acceptable stabilization method or other alternative method, which are demonstrated by trial shaft in either case.

4. If concrete placement is suspended before completion of a pile or a construction joint is required for some other reason, show the detail and elevation of the joint on the as-built drawings.

5. If construction joints are required and the reinforcing cage is not required at the joint location, provide dowels of the same size and configuration as the reinforcing cage, suitably tied, with embedment sufficient to develop and bond strength of the bars.

3.3 FIELD QUALITY MONITORING

A. The Geotechnical Engineering Division will perform all tests hereinafter specified and any additional tests as may be required, and will prepare test reports:

1. The bottom elevations, bearing, and lengths of piles as shown on the drawings are estimated from the soil boring data. The actual elevations, pile lengths and load capacities shall be determined by the Geotechnical Engineering Division.

2. The Contractor shall notify the Geotechnical Engineering Division sufficiently in advance to allow observation of the shaft excavating and evaluation herein specified as soon as the desired level is reached.

3. The Geotechnical Engineering Division shall keep an accurate record of each pile excavation.

4. The bottom of the excavation for all piles shall be inspected as necessary by the Geotechnical Engineering Division.

5. The completed piles will be evaluated as directed by the Geotechnical Engineer by sonic gamma logging, cross hole logging or other means for voids or other indications of incomplete pile diameter at any elevation. Provide and install a minimum of two tubes in each pile for logging of the diameter and material as directed by the Geotechnical Engineer. Protect the tubes by sealing, filling with water, etc. and flushing out, prior to sonic testing by the Geotechnical Engineer. Provide coring equipment and core the test piles full length to evaluate concrete consistency and strength. Box the core and deliver portions for testing by the Owner's Concrete Testing Agency. Core other piles as directed at no additional cost where sonic testing or other evaluations indicate deficiencies in concrete consistency, strength, etc.

B. Concrete: The Owner's Concrete Testing Agency shall conduct the following tests and inspections during construction and immediately submit reports thereon to the Architect.

1. Compression Tests shall be made for each 100 cu. yds. (75 cu.m) of concrete, or fraction thereof, but not less than one set of cylinders for each day's concrete placement of each concrete type. Make 5 standard 6x12 (15x30 cm) cylinders and test in accordance with ASTM C31 and C39. Test two cylinders at the age of 7 days and two cylinders at the age of 28 days. Keep one cylinder in reserve for 56-day test if 28 day test does not meet requirements. Only one set of tests shall be made from any one batch of concrete and all 5 cylinders shall be made from the same batch. One 7-day cylinder and one 28-day cylinder shall be cured in a pit at the job site to simulate the same curing conditions as the concrete used in the piles. The remaining cylinders shall be cured in the laboratory. Reports of cylinder tests shall state: The location in the structure; laboratory or site curing; compression strength; type of fracture; age at testing; concrete supplier; mix specification strength and any other pertinent information, together with a statement as to whether this concrete complies with the specifications. In addition, one cylinder for 7-day test shall be taken from every truck load.

2. Slump Tests: ASTM C143. Provide a slump cone at the site at all times. Make two (2) test for each 100 cu. yds. (75 cu.m) of concrete, or fraction thereof, but not less than two (2) tests for each day's placement of each type of concrete. Each test shall be from a separate batch.

3. Inspection of Batch Plant operation as required to ensure that concrete delivered to job complies with the specifications and the design mix. Batch plant inspection shall be required once at start of job and thereafter if concrete falls below specification strength or is not satisfactory to the Inspector of Record.

C. Additional Tests: If, in the opinion of the Architect, based on cylinder strengths below specification requirements or visual defects, concrete of poor quality has been placed, additional tests shall be made as directed by the Architect and at the expense of the Contractor. Tests may be compression tests on cored cylinders, ASTM C42, and/or load tests as outlined in ACI 318, Section 202, or as directed by the Architect. Complete continuous coring of piles will be required, at the Contractor's expense, where observation of the concrete placing operations indicates cause for suspicion of the quality of the concrete, presence of voids, segregation or other possible defects in the piles.

1. Probe the top 2' (60 cm) of fresh concrete at the top of shaft or where concrete placement is delayed to determine consistency. If laitance, foreign matter, or excess water is in evidence, the Contractor shall remove same.

END OF SECTION

THIS PAGE INTENTIONALLY LEFT BLANK

SECTION 02480
STEEL SHEET PILES

PART 1 - GENERAL

1.1 THE REQUIREMENT

A. Contractor shall furnish and install steel sheet piles, complete and in place in accordance with the requirements of the Contract Documents.

B. This section covers the following:

1. All members to be used in the construction of steel sheet pile.

2. Installation of steel sheet piling and trimming of the sheet pile to the lines and grades shown on the DRAWINGS or as required.

3. Pre-drilling to facilitate driving sheet pile to the designated elevations.

1.2 RELATED WORK SPECIFIED ELSEWHERE

A. Section 01561, Environmental Control.

B. Section 01562, Environmental Mitigation.

C. Section 01120, Interface / Coordination Requirements.

D. Section 01311, Preconstruction Safety Conference.

E. Section 01322, Construction Progress Photography.

F. Section 01330, Shop Drawings / Submittals.

G. Section 01722, Surveying.

H. Section 02210, Clearing, Grubbing and Stripping.

I. Section 02240, Sheeting, Shoring and Bracing Systems.

J. Section 02310, Earthwork.

K. Section 02235, Dewatering.

L. Section 02810, Irrigation System.

M. Section 01573, Excavation Shoring, Forms and Falsework.

1.3 REFERENCES SPECIFICATIONS, CODES, AND STANDARDS

A. Comply with the reference standards and Standard Specifications as specified in the GENERAL REQUIREMENTS.

B. Comply with the current provisions of the following Codes and Standards, as applicable:

1. ASTM International (ASTM):

a. A6, Specification for General Requirements for Rolled Structural Steel Bars, Plates, Shapes, and Sheet Piling.

b. A36, Standard Specification for Carbon Structural Steel.

c. A53, Standard Specification for Pipe, Steel, Black and Hot-Dipped, Zinc Coated, Welded and Seamless.

d. A139, Standard Specification for Electric-Fusion (ARC)-Welded Steel Pipe (NPS 4 and Over).

e. A252, Standard Specification for Welded and Seamless Steel Pipe Piles.

f. A328, Standard Specification for Steel Sheet Piling.

g. A572, Standard Specification for High-Strength Low-Alloy Columbium Vanadium Structural Steel.

h. A653, Specifications for Steel Sheet, Zinc Coated (Galvanized) or Zinc Iron Alloy-Coated (Galvannealed) by the Hot-Dip Process.

i. A690, Standard Specification for High Strength Low-Alloy Steel H-Piles and Sheet Piling for Use in Marine Environments.

j. A1011/A1011M, Specification for Steel, Sheet and Strip, Hot-Rolled, Carbon, Structural, High-Strength Low-Alloy and High-Strength Low Alloy with Improved Formability.

2. American Water Works Association (AWWA):

a. C200, Steel Water Pipe—6 in. (50 mm) and Larger.

3. American Welding Society (AWS):

a. D1.1, Structural Welding Code—Steel.

b. D1.2, Structural Welding Code-Aluminum.

C. Meet the requirements for sheet piling in the Geotechnical Reports dated 07/01/2022 and 07/29/2022 for the Project.

1.4 CONTRACTOR SUBMITTALS

A. Submittals shall be made in accordance with the GENERAL REQUIREMENTS.

B. CONTRACTOR shall provide information from the manufacturer that indicates the sheet piling meets or exceeds the requirements of this section.

C. CONTRACTOR shall submit verification from the manufacturer that the hammer can deliver the required energy.

D. Splice locations, if necessary, shall be reviewed and accepted by ENGINEER prior to installation.

E. Provide qualifications of proposed sheet pile installer and support personnel as required in this Section.

F. Submit steel sheet pile type and configuration to meet requirements of project documents. Include manufacturer's data or complete calculations, both signed and stamped by Civil or Structural Engineer licensed in California. Include additional documentation as needed to show sheet pile system will meet project requirements.

1.5 QUALITY ASSURANCE

A. Laborers: Use adequate number of skilled laborers who are thoroughly trained and experienced in the necessary crafts and who are completely familiar with the specified requirements and the methods needed for proper performance of the work of this Section.

B. Engage a licensed surveyor to verify that work is within specified tolerances. Surveyor shall report in writing to the ENGINEER, with copy to Contractor, certifying work as acceptable or indicating deviations from allowable tolerances.

C. Work required under this Section shall be performed by a contractor having at least three (3) successful past installations of sheet piling of comparable overall heights and sections and comparable penetration into soils similar to those found on the PROJECT and having successfully completed at least 3 projects of a similar nature.

PART 2 - PRODUCTS

2.1 GENERAL

A. All steel sheet piling shall be new and unspliced material throughout, unless otherwise reviewed and accepted by ENGINEER.

B. Steel sheet piles and special fabricated shapes shall be of a design that ensures continuous interlock throughout the entire length when in place.

2.2 MATERIALS

A. Structural Performance: Provide sheet piles capable of withstanding transportation, erection, and driving stresses and design loads within limits indicated and under conditions existing at Project site.

B. Steel sheet piling shall meet the requirements of ASTM A328, (Grade 50).

C. Steel corners, tees, wyes, and crosses shall meet the requirements of ASTM A328.

D. Steel sheet piles required for the PROJECT shall be the type and weight shown on the DRAWINGS.

E. Sheet piling shall be constructed with a weathering finish.

F. Additional pile length may be required to provide for trimming of tops of sheet piling.

G. The interlocks between steel sheet pile sections shall be configured such that the average width of the annular space between all contact points of the interlocks shall be a maximum of one-eighth (1/8) inch, as determined by ENGINEER.

H. Steel sheet piles and interlocks shall not have excessive kinks, camber or twist that would prevent the pile from reasonably-free sliding to indicated depth.

I. All fabricated connections shall be made with the use of angles or bent plates, as necessary, and shall be adequately welded or connected with high strength bolts as accepted by ENGINEER.

J. Handling Holes:

1. If handling holes are provided, they shall be two (2) standard two and nine-sixteenth (2-9/16) inch diameter handling holes located six (6) inches from one end.

2. The holes shall be plugged by welding a piece of steel over the hole prior to installing any riprap, backfill or drop structure cap.

3. The plated hole shall be watertight.

2.3 STORAGE AND HANDLING

1. Do not subject piles to damage by impact bending stresses in transporting to and storing piles onsite.

2. Store and handle piles such that corrosion protection coating will not be damaged.

PART 3 - EXECUTION

3.1 GENERAL

A. Do not begin sheet pile installation until the earthwork in the area where the piles are to be driven has been completed to the extent that the grade elevation is at no more than twelve (12) inches above or below the top of the piling elevation as indicated on the DRAWINGS.

B. For the purpose of this Section, driving of sheet piles refers to driving by repeated blows of an impact hammer or similar equipment. At its discretion, the CONTRACTOR may propose and submit alternative methods for sheet pile installation such as high-frequency vibration or press-in methods. Acceptance of such alternatives will be at the sole discretion of the ENGINEER and may be subject to additional requirements or restrictions. If an alternative method is approved, it will be subject to all of the requirements for installation in this Section unless specifically exempted.

C. Comply with the most stringent requirements of the current CITY or local noise ordinances, which may include:

1. Enclosing the hammer or the guide rails in an acoustic chamber to dampen the noise sufficiently to be acceptable in urban situations.

2. Use of low-noise-generating construction equipment.

3. Maintenance of mufflers and ancillary noise abatement equipment.

4. Use of pile drivers and other techniques that result in less noise than 75 dB(A) as measured 50 or more feet from the pile driving equipment.

5. Scheduling high noise producing activities during periods that are least sensitive.

6. Routing construction related truck traffic away from noise-sensitive areas.

7. Reducing construction vehicle speeds.

3.2 PREPARATION

A. Any fill along the alignment of the sheet pile must be in place to sub-grade elevations and compacted prior to driving the sheet pile.

B. Fill material (except riprap, boulders, bedding and grout) is not to be placed around the sheet pile after the sheet pile is in place.

3.3 PERFORMANCE REQUIREMENTS (NOT USED)

3.4 INSTALLATION

A. General:

1. All welding or gas cutting shall be in accordance with the current standards of the American Welding Society.

2. Virtual Refusal:

a. Steel sheet piling shall be driven to the depths shown on the DRAWINGS or to virtual refusal.

b. Virtual refusal is defined as ten (10) blows per inch with an approved pile hammer.

c. A pile hammer shall be used to determine virtual refusal.

d. The hammer shall be operating at the manufacturer's recommended stroke and speed when virtual refusal is measured.

e. Notify ENGINEER immediately if virtual refusal is encountered at depth less than shown on DRAWINGS. Pre-drilling or other acceptable means may be required to ensure piles are installed to minimum depth as determined by ENGINEER. If minimum depth cannot be achieved, alternative mitigation to ensure function may be required.

B. Sheet Piling Driving:

1. Steel sheet piling shall be assembled before driving and then driven as a continuous wall, progressively in stages to keep the piles aligned correctly and minimize the danger of breaking the interlock between the sheets.

2. Steel sheet piling shall be driven to form a tight bulkhead.

3. The driving of sheet piling closer than a clear distance of 15 inches (381 mm) to unreinforced concrete, brick, or clay sewers or storm drains is not permitted.

4. A driving head shall be used and any piling which is damaged in driving or which has broken interlocks between sections shall be pulled and replaced at CONTRACTOR's expense.

5. The piling shall be driven within the following tolerances:

   a. Alignment:

      1) Sheet pile shall be driven to form a relatively straight line between the terminal points shown on the DRAWINGS.

      2) Horizontal deviation of any point from a straight line connecting the two ends of the wall section shall be a maximum of six (6) inches.

   b. Plumbness: Each individual sheet pile section shall be driven vertical, within a horizontal tolerance of two percent (2%) of any vertical length measured along the pile.

   c. Elevation:

      1) Tops of sheet pile sections shall be within a tolerance of one (1) inch from plan elevations.

      2) CONTRACTOR shall not be paid for excess sheet pile trimmed off the end of the pile to meet final grade.

C. CONTRACTOR shall brace and/or provide soil grading as necessary during construction operations in order to provide lateral stability for the sheet pile wall. The sheet pile wall has been designed for the soil grades of the final configuration denoted on the DRAWINGS only. Other temporary configurations during the construction period shall not be allowed.

D. Care shall be taken during driving to keep from causing deformations of the top of the piles, splitting of section, or breaking of the interlock between sections. Care shall also be taken during driving to prevent and correct any tendency of steel sheet piles to twist or get out of plumb.

E. Steel Z piling shall be driven with the ball-end leading. Proper care and planning shall be used to allow for this construction procedure in both immediate and possible future walls.

F. Alternate Z piles shall be reversed end for end for proper interlocking in the “normal” position. Piles shall also be aligned properly to maintain a “normal” driving width.

G. For sheet piles driven into the native soils, pre-drilled soils, or excavated soils, a vibratory driver may be used as long as the required depth is obtained.

H. For sheet piles being driven into bedrock, an approved hammer utilizing a minimum hammer energy of 19,000 foot-pounds per square inch of steel section shall be used to obtain the required depth or virtual refusal. The hammer shall be clearly marked so that it can be identified at the job site.

I. Steel sheet pile that is full length as shown on the DRAWINGS and is required to be driven below the specified cutoff elevation shall be spliced with additional steel sheet piling with a full penetration butt weld.

END OF SECTION

SECTION 02501
MAINTENANCE AND SUPPORT OF UTILITIES

PART 1 - GENERAL

1.1 DESCRIPTION

A. This section specifies requirements for designing, furnishing, installing, maintaining, and removing temporary diversions and supports for existing functioning utilities indicated to remain in service and protecting and maintaining such utilities and those indicated to be maintained in place.

B. Relocation, protection and maintenance of existing utilities will be performed by the utility owners, except where utility relocation, protection and maintenance is indicated shall be performed by the CONTRACTOR.

C. Relocation and protection of other utilities for the convenience of the CONTRACTOR shall be approved by agencies having jurisdiction, and the CONTRACTOR shall be responsible for the design and construction costs.

1.2 RELATED WORK SPECIFIED ELSEWHERE

A. Special Provisions: Utility Summary.

B. Section 01563, Pollution Control - Sewage Spill Prevention and Response Requirements.

C. Section 01711, Site Investigation - Utility Summary.

D. Section 02310, Earthwork.

1.3 REFERENCE SPECIFICATIONS, CODES, AND STANDARDS

A. General: Standard Specifications for Public Works Construction (SSPWC) as modified by the Brownbook.

B. Gas: The Gas Company Standard Specifications.

C. Telephone: Pacific Bell System Practices, series 622-000-000 through 622-700-200.

D. Los Angeles Department of Water and Power (LADWP) or (DWP) Drawings.

E. Los Angeles Department of Transportation (LADOT).

1.4 SUBMITTALS

A. General: Make submittals in accordance with section 01330.

B. Product Data: Certificates of compliance for materials specified in Part 2.

C. Working Drawings and Methods Statements:

1. For utilities to be relocated, protected and maintained by the CONTRACTOR:

a. Means and methods, supplemented by schedule, drawings and calculations for locating, exposing, diverting, abandoning, or protecting and maintaining in place all utilities encountered. Make submittals to the appropriate utility owner for their review and approval with three copies to the ENGINEER.

b. Means and methods for restoring utilities to the required final configuration. Include restoration of curbs, sidewalks and roadway pavement.

c. Means and methods for potholing for locating existing utilities, except when directed by the ENGINEER.

2. For utilities to be relocated, protected and supported by Others: Contact utility owners as listed in the Utility Summary in advance to coordinate the timing and other details of the diversion, maintenance and support of utilities, without impacting other contract work.

D. Quality Control:

1. Qualifications: Retain the services of a licensed civil or structural engineer registered in the State of California to prepare utility relocation, protection, and maintenance plans.

2. Certifications:

a. Provide copies of all required permits for utility work to be performed by the CONTRACTOR.

b. Provide written certification(s) from utility owner(s) that utilities indicated to be abandoned are not in service.

3. Quality Control Plans:

a. Methods for assuring that all utilities to remain in service are protected during construction activities. Include a contingency plan for the detection and repair of damaged utilities.

b. List of utility owners that are not members of Underground Service Alert (USA) of Southern California, along with a contact name, telephone number, and minimum required advance notice to mark utility locations.

4. Notifications:

a. Provide two working days advance notice on the project schedule of work to be performed for utility owners to mark utility locations in the street right-of-way. Notify each owner and the ENGINEER.

b. Immediately notify affected utility owner and ENGINEER of any damage to utilities.

1.5 QUALITY ASSURANCE

A. Retain a licensed civil engineer registered in the State of California with 5 years of experience in the design of utility diversions and support systems to stamp and sign drawings and calculations for work described herein.

B. Perform telecommunications utility work, if necessary, using a contractor on Pacific Bell's or other telecommunications company's list of approved contractors.

1.6 DESIGN CRITERIA

A. Design utility supports and utility diversions in accordance with the utility owner's standards.

1.7 JOB CONDITIONS

A. Existing street light facilities are contained in high voltage cables within conduits that may be corroded.

B. Identify and protect in place any traffic loops located in streets that may be affected by the WORK. In locations where the traffic loops shall be affected, provide temporary signaling and restore traffic loops.

PART 2 - PRODUCTS

2.1 MATERIALS

A. Provide materials conforming to the requirements of the respective utility owners.

PART 3 - EXECUTION

3.1 GENERAL

A. Where indicated, divert or relocate existing utilities, such as water, electrical, CITY communications, gas, traffic signals, telephone, telegraph, cable TV, storm drainage and sanitary sewer facilities by the CONTRACTOR.

B. Maintain continuity of utility service during diversions and maintain protection for the contract duration.

C. Unless otherwise indicated, work required for relocating or otherwise altering utilities and appurtenances that physically interfere with the construction is a part of this Contract. Perform this work at no additional cost to the CITY.

D. Cooperate with utility owners and their designated agents, as specified herein, and provide reasonable access to the worksite to inspect their facilities.

E. Protect rerouted facilities and existing utilities not indicated to be abandoned.

F. Perform excavation and backfilling as specified.

G. Remove and restore pavements, sidewalks, curbs and gutters as specified in applicable standard plans or the SSPWC. The more stringent will govern.

H. Refer to Section 01563 when performing sanitary sewer diversions, maintenance, bypass and support.

3.2 PREPARATION

A. Verify that facilities indicated to be abandoned have been taken out-of-service before starting other work in area.

B. For utility work to be performed by the CONTRACTOR, mark proposed excavations and notify:

1. Underground Service Alert (USA) of Southern California at (800) 422-4133 at least two working days before starting excavation so that USA member organizations existing utility facilities can be marked.

2. Utility owners that are not members of USA sufficiently in advance for representatives to identify and mark utility locations without delaying or impacting other work.

3.3 ABANDONMENT OR REMOVAL FROM SERVICE

A. Remove abandoned facilities as necessary to complete other work. Cut and cap or plug abandoned facilities to remain at work site limits unless otherwise indicated.

B. Telephone lines: Arrange for the utility owner to disconnect service and remove cables before removing conduits and appurtenant structures.

C. Electric facilities: Arrange for the utility owner to disconnect service and remove cables before removing conduits, manholes, and appurtenant structures.

D. Drainage facilities and sanitary sewers: Construct bulkheads of brick masonry or Class 285-C-14 concrete a minimum of one pipe diameter thick at manholes and catch basins and at cut ends.

E. Gas lines: Coordinate with The Gas Company so that The Gas Company can disconnect lines and services and cap lines to remain.

F. Telegraph Facilities: Contact the telegraph company to disconnect and remove lines and services.

G. Other facilities: Coordinate with utility owner prior to beginning work.

3.4 EXECUTION

A. Use hand tools when exposing subsurface structures or excavating within two feet of utility markings as required by state law.

B. Support utility lines and connections to prevent their damage, and impairment or interruption in service, all in accordance with the requirements of the individual utility owner.

C. Enclose and support telephone manholes and ducts not to be relocated in temporary wood enclosures. Allow access in wood enclosures for maintenance and inspection.

D. Except where otherwise specified, notify individual utility owners a minimum of one week in advance of performing utility work, including excavating to expose utilities, installing or removing utility supports, and backfilling. For each utility, secure the inspection and written acceptance from the utility owner prior to backfilling.

E. Drain Facilities and Sanitary Sewers: Refer to the requirements of Section 01563. Notify the Bureau of Sanitation at (323) 342-6006 ((213) 485-7575 after hours) immediately upon damaging or discovering a damaged utility.

F. Gas Mains and Services: Coordinate installation of gas meters with The Gas Company to minimize service interruptions.

G. Concrete Encasements: Utility relocation or protection work shall include excavation around and/or support of existing concrete encasements previously placed around utility lines.

END OF SECTION

SECTION 02515
WATER PIPELINE TESTING

PART 1 -- GENERAL

1.1 THE REQUIREMENT

A. The CONTRACTOR shall furnish all tools, equipment, materials, and supplies and shall perform all labor required to complete the work as indicated in the Contract Documents.

B. This Section covers flushing and testing of all pipelines and appurtenant piping and disinfection of all pipelines and appurtenant piping for water, complete, including conveyance of test water from CITY-designated source to point of use and all disposal thereof, in accordance with the requirements of the Contract Documents.

1.2 RELATED WORK SPECIFIED ELSEWHERE

A. Division 15: MECHANICAL.

1.3 REFERENCE SPECIFICATIONS, CODES AND STANDARDS

A. Comply with the applicable reference specifications as specified in the GENERAL REQUIREMENTS.

B. Comply with the current provisions of the following Codes and Standards.

ANSI/AWWA B300	Hypochlorites.
ANSI/AWWA B301	Liquid Chlorine.
ANSI/AWWA C651	Disinfecting Water Mains.

C. Comply with the Los Angeles City Plumbing Code.

1.4 CONTRACTOR SUBMITTALS

A. Submittals shall be made in accordance with the GENERAL REQUIREMENTS.

B. The following submittals and specific information shall be provided.

1. A testing schedule, including proposed plans for water conveyance, control, disposal~~,~~ and disinfection, shall be submitted in writing for approval a minimum of 48 hours before testing is to start.

1.5 QUALITY ASSURANCE

A. Comply with the applicable Reference Specifications of the GENERAL REQUIREMENTS.

PART 2 -- PRODUCTS

2.1 MATERIALS REQUIREMENTS

A. All test equipment, chemicals for disinfection, temporary valves, bulkheads, or other water control equipment and materials shall be determined and furnished by the CONTRACTOR

subject to the ENGINEER's approval. No materials shall be used which would be injurious to the construction or its future function.

B. Chlorine for disinfection shall be in the form of liquid chlorine, sodium hypochlorite solution, or calcium hypochlorite granules or tablets.

C. Liquid chlorine shall be in accordance with the requirements of ANSI/AWWA B301. Liquid chlorine shall be used only:

1. In combination with appropriate gas flow chlorinators and ejectors.

2. Under the direct supervision of a certified testing laboratory.

3. When appropriate safety practices are observed.

D. Sodium hypochlorite and calcium hypochlorite shall be in accordance with the requirements of ANSI/AWWA B300.

PART 3 -- EXECUTION

3.1 GENERAL

A. Unless otherwise provided herein, water for testing and disinfecting water pipelines will be furnished by the CITY; however, the CONTRACTOR shall make all necessary provisions for conveying the water from the CITY-designated source to the points of use.

B. All pressure pipelines shall be tested. Disinfection shall be accomplished by chlorination. All chlorinating and testing operations shall be performed by a certified laboratory in the presence of the INSPECTOR.

C. Disinfection operations shall be scheduled by the CONTRACTOR as late as possible during the contract time period so as to assure the maximum degree of sterility of the facilities at the time the WORK is accepted by the ENGINEER and the INSPECTOR. Bacteriological testing shall be performed by a certified testing laboratory approved by the ENGINEER and at the expense of the CONTRACTOR. Results of the bacteriological testing shall be satisfactory with the Los Angeles County Department of Health Services or other appropriate regulatory agency.

3.2 HYDROSTATIC TESTING OF PIPELINES

A. Prior to hydrostatic testing, all pipelines shall be flushed or blown out as appropriate. The CONTRACTOR shall test all pipelines either in sections or as a unit. No section of the pipeline shall be tested until all field-placed concrete or mortar has attained an age of 14 days. The test shall be made by closing valves when available, or by placing temporary bulkheads in the pipe and filling the line slowly with water. The CONTRACTOR shall be responsible for ascertaining that all test bulkheads are suitably restrained to resist the thrust of the test pressure without damage to, or movement of, the adjacent pipe. Care shall be taken to see that all air vents are open during filling.

B. The pipeline shall be filled at a rate which will not cause any surges or exceed the rate at which the air can be released through the air valves at a reasonable velocity and all the air within the pipeline shall be properly purged. After the pipeline or section thereof has been filled, it shall be allowed to stand under a slight pressure for at least 24 hours to allow the concrete or mortar lining, as applicable, to absorb what water it will and to allow the escape

of air from any air pockets. During this period, bulkheads, valves, and connections shall be examined for leaks. If leaks are found, corrective measures satisfactory to the ENGINEER shall be taken.

C. The hydrostatic test shall consist of holding the test pressure on the pipeline for a continuous period of 4 hours. The test pressure for pipelines shall be 133 percent of the pipe pressure class shown or specified, measured at the lowest point of the pipeline section being tested. Potable water piping shall be tested at a minimum pressure of 200 psi. The test pressure for yard piping shall be as shown or specified on the Piping Schedule, measured at the lowest point of the pipeline section being tested. No pressure test will be required for a reservoir overflow line. All visible leaks shall be repaired in a manner acceptable to the ENGINEER.

D. The maximum allowable leakage for pipelines shall be 10 U.S. gallons per inch of diameter per mile of pipe per 24 hours for pipe with 40-ft or greater joint lengths and with rubber-gasketed joints, and 20 U.S. gallons per inch of diameter per mile of pipe per 24 hours for pipe with 20-ft or less joint lengths and with rubber-gasketed joints. The maximum leakage for yard piping shall be as shown on the Piping Schedule. Pipe with welded joints shall have no leakage. In the case of pipelines that fail to pass the prescribed leakage test, the CONTRACTOR shall determine the cause of the leakage, shall take corrective measures necessary to repair the leaks, and shall again test the pipelines.

3.3 DISINFECTING PIPELINES

A. General: All water pipelines except those appurtenant to hydraulic structures shall be disinfected in accordance with the requirements of ANSI/AWWA C651 disinfection of water mains using the Continuous-Feed Method as modified herein.

B. Chlorination: A chlorine-water mixture shall be uniformly introduced into the pipeline by means of a solution-feed chlorinating device. The chlorine solution shall be introduced at one end of the pipeline through a tap in such a manner that as the pipeline is filled with water, the dosage applied to the water entering the pipe shall be approximately 50 mg/l. Care shall be taken to prevent the strong chlorine solution in the line being disinfected from flowing back into the line supplying the water.

C. Retention Period: Chlorinated water shall be retained in the pipeline long enough to destroy all non-spore-forming bacteria. This period shall be at least 24 hours. After the chlorine-treated water has been retained for the required time, the free chlorine residual at the pipeline extremities and at other representative points shall be at least 25 mg/l.

D. Chlorinating Valves: During the process of chlorinating the pipelines, all valves and other appurtenances shall be operated while the pipeline is filled with the heavily-chlorinated water.

E. Final Flushing: After the applicable retention period, the heavily chlorinated water shall be flushed from the pipeline until chlorine measurements show that the concentration in the water leaving the pipeline is no higher than that generally prevailing in the system or is acceptable for domestic use. If there is any question that the chlorinated discharge will cause damage to the environment, a reducing agent shall be applied to the water to neutralize thoroughly the chlorine residual remaining in the water.

F. Bacteriological Testing: After final flushing and before the pipeline is placed in service, a sample~~,~~ or samples shall be collected from the end of the line, and shall be tested for bacteriological quality in accordance with the requirements of the Los Angeles County

Department of Health Services or other appropriate regulatory agency. For this purpose, the pipe shall be re-filled with fresh potable water and left for a period of 24 hours before any sample is collected. Should the initial disinfection treatment fail to produce satisfactory bacteriological test results, the disinfection procedure shall be repeated until acceptable results are obtained.

3.4 CONNECTIONS TO EXISTING SYSTEM

A. Where connections are to be made to an existing potable water system, the interior surfaces of all pipe and fittings used in making the connections shall be swabbed or sprayed with a one percent hypochlorite solution before they are installed. Thorough flushing shall be started as soon as the connection is completed and shall be continued until discolored water is eliminated.

END OF SECTION

SECTION 02525
SANITARY SEWER SYSTEM TESTING

PART 1 -- GENERAL

1.1 THE REQUIREMENT

A. The CONTRACTOR shall furnish all tools, equipment, materials, and supplies and shall perform all labor required to complete the work as indicated on the Drawings and specified herein.

B. This Section covers the performance of all pipeline flushing and testing, complete, for sanitary sewer system piping as specified herein and in accordance with the requirements of the Contract Documents.

1.2 RELATED WORK SPECIFIED ELSEWHERE

A. Section 02585 Maintenance Hole and Precast Vault Construction.

1.3 REFERENCE SPECIFICATIONS, CODES AND STANDARDS

A. Comply with the applicable reference specifications as specified in the GENERAL REQUIREMENTS.

1.4 CONTRACTOR SUBMITTALS

A. Submittals shall be made in accordance with the GENERAL REQUIREMENTS.

B. The CONTRACTOR shall submit in writing all proposed plans for testing, and for water conveyance, control and disposal. The CONTRACTOR shall also submit written notice 48 hours in advance of the proposed testing schedule for review and concurrence of the ENGINEER.

1.5 QUALITY ASSURANCE (NOT USED)

PART 2 -- PRODUCTS

2.1 GENERAL

A. Temporary valves, plugs, bulkheads, and other air pressure testing and water control equipment and materials shall be provided by the CONTRACTOR subject to the ENGINEER's review. No materials shall be used which will be injurious to pipeline structure and future function. Air test gages shall be laboratory-calibrated annually test gages and shall be recalibrated by a certified laboratory at the CONTRACTOR's expense prior to the leakage test, only if required by the ENGINEER.

PART 3 -- EXECUTION

3.1 GENERAL

A. Unless otherwise specified, water for testing will be furnished by the CITY; however, the CONTRACTOR shall make all necessary provisions for conveying the water from the CITY-designated source to the points of use.

B. Release of water from pipelines, after testing has been completed, shall be performed as reviewed by the ENGINEER.

C. All testing operations shall be performed in the presence of the INSPECTOR.

3.2 TESTING OF PIPELINE

A. General: All gravity sewer pipes and service laterals shall be tested for exfiltration and/or infiltration and deflection, as specified. All maintenance holes shall be tested for leakage, as specified. Maintenance holes shall be tested prior to backfill placement, whereas all pipe shall be backfilled prior to testing. All leakage tests of sanitary sewer systems shall be in conformance with SSPWC Section 306-1.4.1. For pressure sewers (force main) tests, the water pressure shall be measured at the lowest point of the pipeline section being tested.

B. Water Exfiltration Test shall be in conformance with SSPWC Section 306-1.4.2.

C. Water Infiltration Test shall be in conformance with SSPWC Section 306-1.4.3. Unless otherwise specified, infiltration will be measured by the CONTRACTOR using measuring devices approved by the ENGINEER.

D. Air Pressure Test shall be in conformance with SSPWC Section 306-1.4.4.

E. At the CONTRACTOR's option, joints may be air tested individually, joint by joint, with the use of specialized equipment. The CONTRACTOR shall submit its joint testing procedure for the ENGINEER's review and approval prior to testing. Prior to each test, the pipe at the joint shall be wetted with water. The maximum test pressure shall be 3.0 psi. The minimum allowable pressure drop shall be 1.0 psi over a 30-second test period.

F. Water Pressure Test shall be in conformance with SSPWC Section 306-1.4.5.

G. Deflection Test: All flexible and semi-rigid main line pipe shall be tested in accordance with SSPWC Sections 306-1.2.12 and 306-1.2.13 for deflection, joint displacement, or any other obstruction by passing a rigid mandrel through the pipe by hand, not less than 30 days after completion of the trench backfill, but prior to permanent resurfacing. The mandrel shall be a full circle, solid cylinder, or a rigid, non-adjustable, odd-numbered leg (9 leg minimum) steel cylinder, accepted by the ENGINEER as to design and manufacture. The circular cross section of the mandrel shall have a diameter of at least 95 percent of the specified average inside diameter of the pipe and the minimum length of the circular portion of the mandrel shall be equal to the nominal diameter of the pipe. Obstructions encountered by the mandrel shall be corrected by the CONTRACTOR.

3.3 TESTING OF MAINTENANCE HOLES

A. All sewer maintenance holes shall be hydrostatically tested for leakage after installation, but prior to being backfilled. Prior to hydrostatic testing, all maintenance holes shall be visually inspected for leaks. All leaks or cracks shall be repaired by the CONTRACTOR, prior to hydrostatic testing, to the

satisfaction of the ENGINEER and the INSPECTOR. All pipes entering the maintenance hole shall be sealed at a point outside the maintenance hole walls so as to include testing of the pipe/maintenance hole joints. The maintenance hole shall be filled with water to a level 2 inches below the top of the frame. Safety lines shall be secured to all plugs utilized. After a period of at least one hour to allow the water level to stabilize, the maintenance hole shall be refilled and the water level shall be checked. The water level shall again be checked after a period of 4 hours. If the water level is reduced by more than 1/4-inch, the leakage shall be considered excessive, and the CONTRACTOR shall be required to make all necessary repairs and retest the maintenance hole. The exterior of the maintenance hole shall be inspected during this period for visible evidence of leakage. Visible moisture, sweating, or beads of water on the exterior of the maintenance hole shall not be considered leakage, but any water running across the surface will be considered leakage and shall be repaired to the satisfaction of the ENGINEER and the INSPECTOR regardless of the volume of water lost.

END OF SECTION

THIS PAGE INTENTIONALLY LEFT BLANK

SECTION 02545
STORM DRAIN SYSTEM

PART 1 - GENERAL

1.1 DESCRIPTION

A. Furnish all labor, materials and equipment necessary to provide "on-site" Storm Drain System as shown on the Contract Drawing and specified herein, including:

1. Diversion Structure.
2. Pretreatment Unit.
3. Wet Well.
4. Secondary Treatment Unit.
5. Concrete Vaults and Manholes.
6. Storm Drain Pipe.
7. Outlet and outfall structures.

B. Repair and construct paving and bases after installation of Storm Sewerage System. The Contractor shall include in contract cost and pay for Street Damage Restoration Fee _____ as indicated in Section 02710 - YARD WORK AND STREET WORK.

C. Related Sections:

1. Documents affecting work of this Section include, but are not necessarily limited to the GENERAL CONDITIONS, SUPPLEMENTARY CONDITIONS and DIVISION 1 - GENERAL REQUIREMENTS and applicable section of the Project Manual.
2. Site Demolition in Section 02220.
3. Shoring in Section 02240.
2. Earthwork in Section 02310.
5. Yard Work and Street Work in Section 02710.
6. Irrigation System in Section 02810.
7. Landscaping 02900.
8. Concrete Work in Section 03300.
9. Miscellaneous Metals in Division 5.
10. Caulking and Sealants in Section 07920.
11. Plumbing in Division 15.

1.2 QUALITY ASSURANCE

A. Bonded Contractor: For connection to City's Storm Drain System including any catch basin or structure, Contractor specializing in the Storm Drain System connection work of this section shall be preapproved, bonded, and certified by Los Angeles City Bureau of Engineering. Submit certificates verifying Contractor's qualifications prior to start of work.

B. Labor: Use adequate numbers of skilled laborers who are thoroughly trained and experienced in the necessary crafts and who are completely familiar with the specified requirements and the methods needed for proper performance of the work of this Section.

C. Codes and Regulations: Conform to the applicable 2025 Los Angeles City Building Code and Amendments, Los Angeles City Bureau of Engineering Standard Plans, and the Standard Specifications for Public Works Construction (SSPWC), latest edition.

1.3 SUBMITTALS

A. Comply with applicable provisions in the Section 01330 - SUBMITTALS of DIVISION 1 - GENERAL REQUIREMENTS of the Project Manual.

B. Product Data: Within 35 calendar days after the Contractor has received the City's "Notice to Proceed", submit:

1. Materials list of items proposed to be provided under this Section and other related Sections.
2. Manufacturer's Specifications and other data needed to prove compliance with the specified requirements.
3. Manufacturer's recommended installation procedures which, when approved by the City Engineer or the Consultant, will become the basis for accepting or rejecting actual installation procedures used on the Work.
4. Operation and Maintenance Manual for the Secondary Treatment Unit.

C. Contractor's proof of qualification.

D. Shop Drawings:

1. Shoring Drawings.
2. Traffic Detour Plans.
3. Submit complete shop fabrication drawings of all steel pipe, pipe specials and joint details. Contractor shall also submit a schedule of pipe marks accompanied by a plan showing the field location of each mark.
4. Secondary Treatment Unit Shop Drawings, including structure, filter cartridges and accessory equipment. Drawings shall include principal dimensions, filter placement, location of piping, and unit foundation.

E. Testing Data and Reports.

1.4 DELIVERY, STORAGE AND HANDLING

A. Deliver material and products with certified delivery tickets to the job-site where directed by the City Engineer or the Consultant.

B. Store materials on the job located where directed by the City Engineer or the Consultant and not interfering with work operations of this Section.

C. Handle materials safely in a manner avoiding damage prior to and during installation and not damaging work of other trades.

1.5 PROTECTION

A. Required:

1. Furnish, erect and maintain barriers, lights and signs as necessary to protect the public, Contractor's and City's personnel and work under this Contract in accordance with Work Area Traffic Control Handbook until such time for backfilling of trenches and subsequent Contracted Site and "Street Work" operations.

1.6 PERMIT

A. Required:

1. Obtain Storm Drain Connection permit for connecting and discharging storm water into City street storm drain system as noted on the Contract Drawing and as noted in Sections of GENERAL CONDITIONS and Section 01112 – DESCRIPTION OF THE WORK in GENERAL REQUIREMENTS of the Project Manual or as otherwise directed by the City Engineer or the Consultant.

2. Street Repair A Permit for the installation of storm drain pipes in public right-of-ways.

1.7 INSPECTION

A. Required:

1. All work outside the property lines regarding storm drain line connections to the street storm drain or gutters through sidewalk and curbs or as called for on the Contract Drawings, by the Storm Drain Connection Inspector of the Bureau of Contract Administration. Contractor shall make necessary arrangement in accordance with the permit requirements.

2. All work inside the property lines regarding storm drain lines shall be inspected by the Los Angeles City Department of Building and Safety.

3. Test pipes shall be selected from the lot and tested in accordance with the requirements specified in SSPWC, but not necessary limited to. At the place of manufacture, the City Engineer or Inspector will indicate tentative acceptance of the pipe for delivery by marking with the Agency stamp. Final acceptance will be made only when the project has been completed.

4. Maintenance and inspection for Secondary Treatment Unit shall be performed in accordance with Manufacturer's recommendations.

B. Notification: Contractor shall notify all local governing agencies and arrange for required inspection.

1.8 COORDINATION

A. Required: All on-site storm drain work shall be fully coordinated with other Contracted Work operations as per approved work scheduled.

PART 2 - PRODUCTS

2.1 PIPE MATERIAL (As applicable)

A. Reinforced Concrete Pipe: Machine Made type per ASTM C76 (including wall type, D-load, gasket joints, etc. and Section 207-2 - REINFORCED CONCRETE PIPE of the Standard Specifications for Public Works Construction (SSPWC), sizes as indicated on the Contract Drawings.

B. Ductile Iron Pipe: Pipe and fittings shall conform to Section 15700 with sizes as indicated on the Contract Drawings.

C. Sealant: Use approved sealant in all other wall and flooring penetration as shown in Section 07920 - CAULKING AND SEALANT of the Project Manual.

2.2 CONCRETE MATERIALS

A. Required for Catch Basins: Concrete having a compressive strength of 3250 psi at 28 days as per Section 303 of the SSPWC and in Section 03300 – CAST-IN-PLACE CONCRETE of the Project Manual.

2.3 PRETREATMENT UNIT

A. GENERAL:

1. Pretreatment Unit shall be CDS® device (Detail #CDS5653-10-C-756278-015) manufactured by Contech Engineering Solutions, LLC, or approved equal.
2. The Contractor shall furnish all labor, equipment and materials necessary to install the pretreatment unit and appurtenances specified in the Drawings and these specifications.
3. The manufacturer shall be one that is regularly engaged in the engineering design and production of systems deployed for the treatment of storm water runoff for at least five (5) years and which have a history of successful production, acceptable to the Engineer and/or approving Jurisdiction.
4. All components shall be subject to inspection by the engineer at the place of manufacture and/or installation. All components are subject to being rejected or identified for repair if the quality of materials and manufacturing do not comply with the requirements of this specification. Components which have been identified as defective may be subject for repair where final acceptance of the component is contingent on the discretion of the Engineer.
5. The manufacturer shall guarantee the components against all manufacturer originated defects in materials or workmanship for a period of twelve (12) months from the date the components are delivered to the owner for installation. The manufacturer shall upon its determination repair, correct or replace any manufacturer originated defects advised in writing to the manufacturer within the referenced warranty period. The use of components shall be limited to the application for which it was specifically designed.

6. The manufacturer shall submit to the Engineer of Record a "Manufacturer's Performance Certification" certifying that each unit is capable of achieving the specified removal efficiencies listed in these specifications. The certification shall be supported by independent third-party research.

B. MATERIALS:

1. Housing unit of stormwater treatment device shall be constructed of pre-cast or cast-in-place concrete, no exceptions. Precast concrete components shall conform to applicable sections of ASTM C 478, ASTM C 857 and ASTM C 858 and the following:

   a. Concrete shall achieve a minimum 28-day compressive strength of 4,000 pounds per square-inch (psi).

   b. Unless otherwise noted, the precast concrete sections shall be designed to withstand lateral earth and AASHTO H-20 traffic loads.

   c. Cement shall be Type III Portland Cement conforming to ASTM C 150.

   d. Aggregates shall conform to ASTM C 33.

   e. Reinforcing steel shall be deformed billet-steel bars, welded steel wire or deformed welded steel wire conforming to ASTM A 615, A 185, or A 497.

   f. Joints shall be sealed with preformed joint sealing compound conforming to ASTM C 990.

   g. Shipping of components shall not be initiated until a minimum compressive strength of 4,000 psi is attained or five (5) calendar days after fabrication has expired, whichever occurs first.

2. Internal Components and appurtenances shall conform to the following:

   a. Screen and support structure shall be manufactured of Type 316 and 316L stainless steel conforming to ASTM F 1267-01.

   b. Hardware shall be manufactured of Type 316 stainless steel conforming to ASTM A 320.

   c. Fiberglass components shall conform to applicable sections of ASTM D-4097.

   d. Access system(s) conform to the following:

   e. Manhole castings shall be designed to withstand AASHTO H-20 loadings and manufactured of cast-iron conforming to ASTM A 48 Class 30.

C. PERFORMANCE:

1. The pretreatment unit shall be Washington Department of Ecology (DOE) General Use Level Designation (GULD) approved for pretreatment, current at the time of this project bid date and as installed with no modifications.

2. The unit shall be a "Certified Full Capture System" certified by the California State Water Resources Control Board, current at the time of this project bid date and as installed with no modifications.

3. The unit shall be capable of achieving an 80 percent reduction of a particle size distribution having a mean particle size (d50) of 125 microns unless otherwise stated.

4. The unit shall be capable of capturing and retaining 100 percent of pollutants greater than or equal to 2.4 millimeters (mm) regardless of the pollutant's specific

gravity (i.e.: floatable and neutrally buoyant materials) for flows up to the device's rated-treatment capacity. The unit shall be designed to retain all previously captured pollutants addressed by this subsection under all flow conditions. The unit shall be capable of capturing and retaining total petroleum hydrocarbons. The unit shall be capable of achieving a removal efficiency of 92 and 78 percent when the device is operating at 25 and 50 percent of its rated-treatment capacity. These removal efficiencies shall be based on independent third-party research for influent oil concentrations representative of storm water runoff (20 ± 5 mg/L). The unit shall be greater than 99 percent effective in controlling dry-weather accidental oil spills.

5. The unit shall be designed with a sump chamber for the storage of captured sediments and other negatively buoyant pollutants in between maintenance cycles. The minimum storage capacity provided by the sump chamber shall be in accordance with the volume listed in Table 1. The boundaries of the sump chamber shall be limited to that which do not degrade the unit's treatment efficiency as captured pollutants accumulate. The sump chamber shall be separate from the treatment processing portion(s) of the unit to minimize the probability of fine particle re-suspension. In order to not restrict the Owner's ability to maintain the unit, the minimum dimension providing access from the ground surface to the sump chamber shall be 16 inches in diameter.

6. The unit shall be designed to capture and retain Total Petroleum Hydrocarbons generated by wet-weather flow and dry-weather gross spills and have a capacity listed in Table 1 of the required unit.

7. The unit shall convey the flow from the peak storm event of the drainage network, in accordance with required hydraulic upstream conditions as defined by the Engineer. If a substitute unit is proposed, supporting documentation shall be submitted that demonstrates equal or better upstream hydraulic conditions compared to that specified herein. This documentation shall be signed and sealed by a Professional Engineer registered in the State of the work. All costs associated with preparing and certifying this documentation shall be born solely by the Contractor.

8. The unit shall have completed field testing following TARP Tier II protocol requirements.

2.4 SECONDARY TREATMENT UNIT (STU)

A. GENERAL:

1. Secondary Treatment Unit shall be StormFilter Media Cartridge Filtration System (Detail #SF0822-756278-020) manufactured by Contech Engineering Solutions, LLC, or approved equal.

2. The Contractor shall furnish all labor, equipment and materials necessary to install the pretreatment unit and appurtenances specified in the Drawings and these specifications.

3. The STU shall consist of an aboveground or underground precast concrete, steel or plastic structure that houses passive, radial flow, siphon-actuated, and rechargeable media filled filtration cartridge(s). The rechargeable media-filled filter cartridges shall incorporate a protective hood over the media cartridge and a siphon-actuated surface self-cleaning mechanism to increase the effective life of the filter media and to reduce the accumulation of material on the cartridge/media interface. Each radial-flow filter cartridge shall operate at a predetermined flow rate through the use of an integrated flow control orifice located within each filter cartridge outlet manifold. The media-filled cartridges shall trap particulates (TSS)

and have the capability to adsorb pollutants such as dissolved metals, nutrients and hydrocarbons. The media cartridge filtration system shall consist of no less than 0.12 cubic feet of filter media for each 1-gallon per minute of water quality treatment flow.

4. The STU shall be of a type that has been installed and in use for a minimum of five (5) consecutive years preceding the date of installation of the system. The manufacturer shall have been, during the same consecutive five (5) year period, engaged in the engineering design and production of systems deployed for the treatment of storm water runoff and which have a history of successful production, acceptable to the Engineer of Record and/or the approving Jurisdiction.

B. INTERNAL COMPONENTS:

1. All internal components including ABS and PVC manifold piping, filter cartridge(s), filter media (as specified on the plans in the StormFilter data block or by the Engineer of Record) shall be provided by Contech Engineered Solutions LLC. This includes sump covers, flow spreaders, energy dissipaters and outlet risers with scum baffles where appropriate.

2. ABS manifold pipe shall meet ASTM F628. PVC manifold pipe shall meet ASTM D1785 and PVC fittings shall meet ASTM D2466.

3. Filter cartridge bottom pan, inner ring, and hood shall be constructed from linear low-density polyethylene (LLDPE) or ABS. Filter cartridge screen shall consist of 1" x 1/2" welded wire fabric (16 gauge minimum) with a bonded PVC coating. Internal parts shall consist of ABS or PVC material. Siphon-priming float shall be constructed from high-density polyethylene (HDPE). All miscellaneous nuts, bolts, screws, and other fasteners shall be stainless steel or aluminum.

4. An orifice plate shall be supplied with each cartridge to restrict flow rate to a maximum of 22.5 gpm at system design head or as specified on drawings.

5. If a sump cover/overflow, baffle/inlet, sump/outlet, sump/inlet, tower/outlet overflow is provided, they shall be constructed of ABS and sealed to the interior vault walls and floor with a polyurethane construction sealant rated for use below the waterline, SikaFlex 1a or equal. Contractor to provide sealant material and installation unless completed prior to shipment.

6. Where an Underdrain Design is provided, the size of the underdrain will provide a minimum of 0.067 in2 of underdrain cross sectional area per 1 gpm of design flow rate. (example: 105 gpm maximum design flow rate will require an underdrain with 7.035 in2 of cross sectional area, which is equal to one 3" diameter pipe).

7. Filter media shall be provided by Contech or an approved alternate source. Filter media shall consist of one or more of the following, as specified in the StormFilter data block, or by the Engineer.

8. Perlite Media: Perlite media shall be made of natural siliceous volcanic rock free of any debris or foreign matter. The perlite media shall have a bulk density ranging from 6.5 to 8.5 lb/ft3 and particle sizes ranging from that passing through a 0.50 inch screen and retained on a U.S. Standard #8 sieve.

9. CSF Media: CSF media shall be made exclusively of composted fallen deciduous leaves. Filter media shall be granular. Media shall be dry at the time of installation. The CSF leaf media shall have a bulk density ranging from 40 to 50 lb/ft3 and particle sizes ranging from that passing through a 0.50 inch screen to that retained on a U.S. Standard #8 sieve.

10. Metal Rx Media: Metal Rx media shall be made exclusively of composted fallen deciduous leaves. Filter media shall be granular. Media shall be dry at the time of installation. The Metal Rx media shall have a bulk density ranging from 40 to 50 lb/ft3 and particle sizes ranging from that passing through a U.S. Standard #8 sieve to that retained on a U.S. Standard #14 sieve.

11. Zeolite Media: Zeolite media shall be made of naturally occurring clinoptilolite, which has a geological structure of potassium-calcium-sodium aluminosilicate. The zeolite media shall have a bulk density ranging from 44 to 48 lb/ft3, particle sizes ranging from that passing through a U.S. Standard #4 sieve to that retained on a U.S. Standard #6 sieve, and a cation exchange capacity ranging from 1.0 to 2.2 meq/g.

12. Granular Activated Carbon: Granular activated carbon (GAC) shall be made of lignite coal that has been steam activated. The GAC media shall have a bulk density ranging from 28 to 31 lb/ft3 and particle sizes ranging from that passing through a U.S. Standard #4 sieve to that retained on a U.S. Standard #8 sieve.

13. Zeolite-Perlite-Granular Activated Carbon (ZPG): ZPG is a mixed media that shall be composed of a 1.3 ft3 outer layer of 100 percent Perlite (see above) and a 1.3 ft3 inner layer consisting of a mixture of 90 percent Zeolite (see above) and 10 percent ranular Activated Carbon (see above).

14. Zeolite-Perlite (Zeo/Perl): Zeo/Perl is a mixed media that shall be composed of a 1.3 ft3 outer layer of 100 percent Perlite (see above) and a 1.3 ft3 inner layer consisting of 100 percent Zeolite.

15. CSF Leaf Media – Granular Activated Carbon (CSF/GAC): CSF/GAC is a mixed media that shall be composed of a 1.3 ft3 outer layer of 100 percent CSF media (see above) and a 1.3 ft3 inner layer consisting of 100 percent Granular Activated Carbon (see above).

16. Perlite – Metal Rx : Perlite/Metal Rx is a mixed media that shall be composed of a 1.3 ft3 outer layer of 100 percent Perlite (see above) and a 1.3 ft3 inner layer consisting of 100% Metal Rx (see above).

17. PhosphoSorb: PhosphoSorb media shall be made from Perlite pellets with activated alumina bound to the surface. The PhosphoSorb media pellets shall be granular and have a bulk density from 18 to 25 lb/ft3. The pellet size should range from that passing through a U.S. Standard 1/4 inch sieve and retained on a #8 sieve.

C. Overflow Assembly (Where Provided):

1. Flow spreader shall be constructed of Linear Low-Density Polyethylene (LLDPE). Contractor to provide sealant material and installation unless completed prior to shipment.

2. Energy dissipater shall be constructed of polyolefins. Contractor to provide sealant material and installation unless completed prior to shipment.

3. Outlet riser with scum baffle shall be constructed of HDPE. Outlet riser shall have an outlet stub outside dimension (O.D.) of 12-inch diameter PVC, SDR 26 and a secondary outlet stub O.D. of 8-inch diameter PVC, SDR 26.

D. Steel Catch Basin & Roof Drain Components:

1. Basin shall be all welded steel construction, fabricated from ASTM A36 1/4-inch steel and shall be designed to withstand AASHTO H-20 wheel loads when placed below ground in a location that could receive direct loading.

2. Basin Grate: Grating shall be ductile iron construction and shall meet AASHTO H-20 loading requirements, and shall be provided according to ASTM A48.

3. Basin Solid Lid (below ground system design): Solid lid shall be gray cast iron, treated with non-slip surfacing, and shall meet AASHTO H-20 loading requirements, and shall be provided according to ASTM A48.

4. Basin Solid Lid (above ground system design): Solid lids shall be PVC plate with pick holes. Covers to be cut as required for top inlet roof drain pipes.

E. Precast Concrete Structure Components:

1. Precast concrete vault shall be provided according to ASTM C857 and C858. Precast concrete manhole shall be provided according to ASTM C478.

2. Vault and manhole joint sealant shall be Conseal CS-101 or approved equal.

3. If interior concrete baffle walls are provided, baffle walls shall be sealed to the interior vault walls and floor with a polyurethane construction sealant rated for use below the waterline, SikaFlex 1a or equal. Contractor to provide sealant material and installation unless completed prior to shipment.

4. Frames and covers shall be gray cast iron and shall meet AASHTO H-20 loading requirements, and shall be provided according to ASTM A48.

5. Doors shall have hot-dipped galvanized frame and covers. Covers shall have diamond plate finish. Each door to be equipped with a recessed lift handle. Doors shall meet H-20 loading requirements for incidental traffic, at a minimum, or per project specific traffic loading requirements.

6. Steps shall be constructed of copolymer polypropylene conforming to ASTM D4101. Steps shall be driven into preformed or drilled holes once concrete is cured. Steps shall meet the requirements of ASTM C478 and AASHTO M199. The 1/2" Grade 60 deformed reinforcing bar shall meet ASTM A615, where required.

7. Ladders shall be constructed of aluminum and steel reinforced copolymer polypropylene conforming to ASTM D4101. Ladder shall bolt in place. Ladder shall meet all ASTM C497 load requirements. Ladders provided upon request or where required, and shall not conflict with the operation and accessibility to perform maintenance of the StormFilter.

F. Contractor Provided Components:

1. All contractor-provided components shall meet the requirements of this section, the plans specifications and contract documents. In the case of conflict, the more stringent specification shall apply.

2. Sub-base: Crushed rock base material shall be six-inch minimum layer of 3/4-inch minus rock. Compact undisturbed sub-grade materials to 95 percent of maximum density at +/-2 percent of optimum moisture content. Unsuitable material below sub-grade shall be replaced to engineer's approval.

3. In-situ concrete, if required, shall have an unconfined compressive strength at 28 days of at least 3,000 psi, with 3/4-inch round rock, a 4-inch slump maximum, and shall be placed within 90 minutes of initial mixing.

4. Silicone Sealant shall be pure RTV silicone conforming to Federal Specification Number TT S001543A or TT S00230C or Engineer approved.

5. Grout shall be non-shrink grout meeting the requirements of Corps of Engineers CRD-C588. Specimens molded, cured and tested in accordance with ASTM C109 shall have minimum compressive strength of 6,200 psi. Grout shall not exhibit visible bleeding.

6. For manhole systems, Contractor shall connect to 12-inch or 8-inch diameter outlet riser with Fernco flexible coupling, or approved equal.

7. Rebar used on applicable Catch Basin & Roof Drain systems shall meet ASTM A615M Grade 420 (60 ksi) or as otherwise specified in the general technical specifications.

8. Backfill material shall be 3/4 inch minus crushed rock, or approved equal.

G. Performance Requirements:

1. Cartridge Operation: Each STU shall contain one or more siphon actuated media filter cartridges that maintain a uniform pressure profile across the face of the filter during operation. At the design flow rate the maximum filter hydraulic loading rate is not to exceed 2.1 gallons per minute per square foot of filter surface area. Stormwater shall enter the filter cartridges through sides and shall flow through the filter media radially from the outer perimeter to the inner cartridge lumen and shall have an average contact time no less than 38 seconds. These media filter cartridges will incorporate a self-cleaning mechanism to remove accumulated material from the cartridge media surface that is activated when the siphon breaks.

2. Documentation of Sediment Removal: The STU system shall have the State of Washington Department of Ecology, General Use Level Designation (GULD) Certification and current approval status from the New Jersey Department of Environmental Protection (NJDEP).

3. Cartridge Sediment Loading: Filter cartridges shall be of a design that has demonstrated a minimum sediment retention capacity of 22 pounds of silty loam per cartridge in laboratory tests without a reduction in hydraulic capacity. Laboratory data shall be corroborated with field observations/data demonstrating equivalent or improved longevity without impacting normal hydraulic performance of the StormFilter. All laboratory and field tests submitted in support of this specification must have undergone peer review by outside entity other than Contech.

4. Overflow: Each STU shall include an internal, offline overflow bypass. Water first enters an inlet bay that is separate from the cartridge bay and separate from the outlet bay. Low flows travel from the inlet bay, through a transfer opening and into the cartridge bay. High flows enter the outlet bay by topping a weir separating the inlet and outlet bay. Flow rates beyond the treatment design flow shall bypass, and not enter the cartridge bay.

2.5 MISCELLANEOUS MATERIALS (As Applicable)

A. Miscellaneous Metals: See Section 05500 - METAL FABRICATIONS of the Project Manual.

B. Grout: See Section 03300 - CAST-IN-PLACE CONCRETE of the Project Manual.

C. Mortar: Comply with requirements of ASTM C270 - SPECIFICATION FOR MORTAR FOR UNIT MASONRY, Type "M" except the maximum placement time shall be one hour. No mortar shall be used which has begun to set; retempering not permitted.

D. Pipe Bedding and Backfill Materials: See Sub-Section 3.3 hereinafter, Section 02310 - EARTHWORK of SSPWC and other Sections of the Project Manual.

1. Sand shall be graded as follows:

Sieve size	Percentage Passing Sieves
3/8"	100%
No. 4	60 - 100%
No. 8	65 - 90%
No. 6	45 - 70%
No. 30	25 - 45%
No. 50	10 - 20%
No. 100	2 - 8%
No. 200	0 - 4%
No. 220	0 - 3%

2. Concrete shall be in accordance with the Los Angeles City Bureau of Engineering Standard Plan S-251, latest edition.

PART 3 - EXECUTION

3.1 SURFACE CONDITIONS

A. Examine the areas and conditions under which work of this Section will be performed. Correct conditions detrimental to timely and proper completions of the Work. Do not proceed until detrimental conditions are corrected as directed by the City Engineer or the Consultant.

3.2 EXCAVATING AND TRENCHING

A. General:

1. Conform to the requirements as specified on the drawings, Los Angeles City Plumbing Code, Standard Specifications for Public Works Construction and other sections of the Project Manual. Case 1 Bedding installation of Los Angeles City Bureau of Engineering Standard Plan S-251, latest edition shall be used for all piping laying. Any piping with 8 feet or more cover or backfill, trench width shall not exceed the maximum allowable trench width as shown in Standard Plan S-251.

2. Excavate trenches to provide for a minimum 4-inch thickness of bedding sand below bottom of pipe couplings. There shall be a minimum side clearance of 6 inches on each side.

B. Provide excavation and trenches for storm drain piping systems indicated on the Contract Drawings in accordance with applicable requirements specified in Section 02310 - EARTHWORK.

3.3 STORM DRAIN SYSTEM CONSTRUCTION

A. General: In strict accordance with pipe manufacturers recommendations and the Los Angeles City Plumbing Code and the SSPWC.

B. Installation of Pipe: In accordance with Sec. 306-1.2 INSTALLATION OF PIPE of the SSPWS on unyielding bedding foundations with uniform bearing under full length of pipe barrels; walking on or disturbing pipe in any manner after joints have been made, not permitted; at close of each day's work or whenever work is stopped for any reason, protect ends of pipe with temporary tight fitting closures. Slope as per Contract Drawings.

C. Seal all wall and flooring penetrations and sleeves with applicable fire stopping or sealant material. Obtain inspection prior to wall closure or trench backfill.

D. Bedding:

1. Provide for a minimum 4-inch thickness of bedding sand below bottom of pipe barrels; any over-excavations may require concrete pipe bedding and to be filled with slurry backfill or structural backfill in accordance with Standard Plan S-251, latest edition, at Contractor's expense; bedding sand to be tamped and compacted and accurately graded and shaped to support bottom quadrant of pipe, with coupling holes dug prior to placement of pipe.

2. Backfill: Provide sand backfill to an elevation of 12 inches over the top of the pipe and floor in accordance with Section 306-1.3.3 – WATER DENSIFIED BACKFILL. Use clean earth material for remainder of backfill to required finish grade and compact for yard paving.

E. Pipe Juncture With Concrete Structures: Set pipe ends as necessary for casting-in-place or grouting-in-place after construction of such structures. Junctures with existing storm drain channels to be in accordance with the standards and specifications of the Los Angeles County Flood Control District.

F. Fill Joints: (Other than wedge-lock type) with mortar troweled smooth on inside of pipe; keep mortar joints damp until backfill is placed.

G. Pipe Juncture With Concrete Structures: Set pipe ends as necessary for casting-in-place or grouting-in-place after construction of such structures.

3.4 CONCRETE STRUCTURES

A. General: Valve and meter vault structures, gutters, manholes, etc. as indicated on the Contract Drawings.

B. Materials:

1. Concrete: As specified in Sections 03300 CAST-IN-PLACE CONCRETE.

2. Grates, Frames and Covers: As hereinbefore specified.

3. Miscellaneous Metals: As specified in Section 05500 - METAL FABRICATIONS.

4. Float Valve and Water Supply Piping to Interceptor: As specified in Division 15 - PLUMBING.

C. Construction: As indicated on the Drawings and specified in Section 03300 – CAST-IN-PLACE CONCRETE.

E. Maintenance Holes: Construct at location and to elevations indicated on the Contract Drawings, in accordance with details and materials noted thereon; set precast concrete segments with full mortar joints troweled smooth on interior of manhole; set cover frames in full mortar bed and accurately to meet paving grades.

3.5 PRETREATMENT UNIT

A. The contractor shall exercise care in the storage and handling of the pretreatment unit components prior to and during installation. Any repair or replacement costs associated with events occurring after delivery is accepted and unloading has commenced shall be borne by the contractor.

B. The unit shall be installed in accordance with the manufacturer's recommendations and related sections of the contract documents. The manufacturer shall provide the contractor installation instructions and offer on-site guidance during the important stages of the installation as identified by the manufacturer at no additional expense. A minimum of 72 hours notice shall be provided to the manufacturer prior to their performance of the services included under this subsection.

C. The contractor shall fill all voids associated with lifting provisions provided by the manufacturer. These voids shall be filled with non-shrinking grout providing a finished surface consistent with adjacent surfaces. The contractor shall trim all protruding lifting provisions flush with the adjacent concrete surface in a manner which leaves no sharp points or edges.

D. The contractor shall removal all loose material and pooling water from the unit prior to the transfer of operational responsibility to the Owner.

3.6 SECONDARY TREATMENT UNIT

A. Precast Concrete Structure:

1. Set precast structure on crushed rock base material that has been placed in maximum 6-inch lifts, loose thickness, and compacted to at least 95-percent of the maximum dry density as determined by the standard Proctor compaction test, ASTM D698, at moisture content of +/-2% of optimum water content.
2. Structure floor shall slope 1/4 inch maximum across the width and slope downstream 1 inch per 12 foot of length. For manholes "Length" is defined by a line running from the invert of the outlet through the center of the manhole and "width" is the perpendicular to the "length". Structure top finish grade shall be even with surrounding finish grade surface unless otherwise noted on plans.
3. Inlet and outlet pipes shall be stubbed in and connected to precast concrete structure according to Engineer's requirements and specifications. All connections to be sealed to minimize water intrusion. If grout is used, Contractor to grout all inlet and outlet pipes flush with or protruding up to 2 inches into interior of structure.
4. When required, ballast shall be placed to the dimensions specified by the engineer and noted on the data block. Ballast shall not encase the inlet and/or outlet piping. Provide 12" clearance from outside diameter of pipes.

B. Steel Catch Basin:

1. Catch basin floor shall slope 1/4 inch maximum across the width and slope downstream 1 inch per 12 foot of length. Catch basin top finish grade shall be even with surrounding finish grade surface unless otherwise noted on plans.
2. Contractor shall prevent sediment and debris from entering the filter unit during construction.

3. If necessary, the inlet chamber may be filled with clean water to assist in preventing flotation during construction until the structure is backfilled and the concrete collar is poured.

4. Catch basin outlet shall be connected to downstream (and upstream, if applicable) piping using a flexible-type coupling.

5. Concrete perimeter slab shall be constructed 1 foot wide and 6 inches thick. Slab shall include two #4 rebar hoops with minimum 6-inch overlap at closure. Allow 2-inch vertical spacing between hoops and minimum 2-inch clearance from concrete surfaces, or as directed by the Engineer.

C. Clean Up:

1. Remove all excess materials, rocks, roots, or foreign material, leaving the site in a clean, complete condition approved by the engineer. The project site shall be clean and free of dirt and debris and the inlet/outlet chamber(s) and filter chamber(s) shall be free of construction debris and sediment before the allowing runoff to enter and place the system in operation. All filter components shall be free of any foreign materials including concrete and excess sealant.

2. Where applicable, Contractor shall remove the temporary filter fabric around the inlet grate to place the system in operation.

3. Where required, the 4-inch cleanout plug in the overflow weir wall shall remain in place for proper operation of the system.

D. Filter Cartridges:

1. Filter cartridges shall be delivered installed in the structure, unless otherwise agreed upon with Manufacturer. Contractor shall take appropriate action to protect the cartridges from sediment and other debris during construction. The method ultimately selected shall be at Contractor's discretion and Contractor's risk. Some methods for protecting the cartridges include, but are not limited to:

   a. Remove cartridges from the structure and store appropriately. Cartridges shall be reinstalled to operate according to 3.5.D.b. of this section (see below).

   b. If structure is equipped with underdrain bypass piping, Contractor may leave cartridges in the vault and allow stormwater entering collection system to bypass filter bay through underdrain bypass piping.

   c. Leave cartridges in the structure and plug inlet and outlet pipe to prevent stormwater from entering the vault, and provide means for stormwater to bypass the StormFilter.

2. Filter cartridges shall not be placed in operation until the structure is clean and the project site is clean and stabilized (construction erosion control measures no longer required). The project site includes any surface that contributes storm drainage to the StormFilter. All impermeable surfaces shall be clean and free of dirt and debris. All catch basins, manholes and pipes shall be free of dirt and sediments. Contact Manufacturer to assist with system activation and/or inspect the system for proper installation once site is clean and stabilized.

3. Contractor to install filter cartridges. Specifications for alternate cartridge installation methods available by contacting Manufacturer directly.

4. Filter Cartridges with 1/4-Turn Connector Fittings: Tape shall be cleanly and completely removed from manifold fitting openings. 1/4-turn connects shall be glued and inserted into all manifold fittings to be equipped with a filter cartridge.

Filter cartridges shall be turned onto the connector until they reach the hard stop on the connector – approximately 1/4 revolution, with care to not "over turn" the cartridge, or turn with such force to damage the hard stop mechanism. Plugs shall be inserted without glue in all manifold fittings not equipped with a filter cartridge.

3.7 BACKFILL

A. As specified in "Sand and Backfill" subsections of Sections 02310 - EARTHWORK and provisions herein, including approval, place approved washed sand 12-inches above top of pipe and the balance of backfill shall be approved clean earth material free from rock or large clods larger than 1-inch in size. If excavated material is unsuitable or rejected; Contractor shall provide approved imported materials as necessary to complete the work.

B. No backfill material shall be deposited against the concrete structure until the concrete has developed not less than the specified 28 - day compressive strength.

3.8 STREET WORK

A. Required: All work outside property lines extending under sidewalks and connecting to existing storm drain structures shall comply with applicable sections of the SSPWC and as directed by the Bureau of Engineering. Complete all such work and obtain required approval prior to start of any concrete paving or sidewalk work.

1. Line and grade verification of drainpipe.
2. Trench backfill and compaction.

B. Repair all street paving and bases in accordance with the scopes indicated on the contract drawings, and in Section 02310 - EARTHWORK and Section 02710 - YARD WORK AND STREET WORK of the Project Manual. Contractor shall pay for all street damage restoration fee as indicated in Section 02710 - YARD WORK AND STREET WORK.

3.9 TESTING (As Applicable)

A. Required: Provide personnel and equipment necessary, and perform tests required to demonstrate that the work of this Section has been completed in accordance with the specified requirements.

B. Hydrostatic Test on Watertight Joints:

1. Make a hydrostatic test on each watertight joint. Test one sample of each type watertight joint used. If one sample fails because of faulty workmanship, test an additional joint.
2. Demonstrate that joints in reinforced and unreinforced concrete pipe comply with ASTM C443 - SPECIFICATION FOR JOINTS FOR CIRCULAR CONCRETE SEWER AND CULVERT PIPE, USING RUBBER GASKETS.
3. Comply with ASTM C425 - SPECIFICATION FOR COMPRESSION JOINTS FOR VITRIFIED CLAY PIPE AND FITTINGS for tests of joints in clay pipe.
4. Make tests in concrete pipe and clay pipe at an internal hydrostatic pressure of 10 psi for 24-hours.
5. Replace or repair joints found to be faulty. Repeat the test and repair cycle until joints are demonstrated to meet the specified requirements.

END OF SECTION

THIS PAGE INTENTIONALLY LEFT BLANK

SECTION 02585
MAINTENANCE HOLE AND PRECAST VAULT CONSTRUCTION

PART 1 - GENERAL

1.1 THE REQUIREMENT

A. The CONTRACTOR shall furnish all tools, equipment, materials, and supplies and shall perform all labor required to complete the work as indicated on the Drawings and specified herein.

B. This section covers the work necessary for the construction of maintenance holes and precast vaults. General maintenance hole and vault details are as shown on the Drawings.

1.2 RELATED WORK SPECIFIED ELSEWHERE

A. Section 01330 Shop Drawings/Submittals.

B. Section 01453, Sampling, Testing, and Fabrication Inspection.

C. Section 02310 Earthwork.

D. Section 03300.

1.3 REFERENCE SPECIFICATIONS, CODES AND STANDARDS

A. Comply with the applicable reference specifications as specified in the GENERAL REQUIREMENTS.

B. Comply with the current provisions of the following Codes and Standards.

1. Commercial Standards:

ASTM A 48	Specification for Gray Iron Castings.
ASTM C 14	Standard Specification for Nonreinforced Concrete Sewer, Storm Drain, and Culvert Pipe.
ASTM C 150	Specification for Portland Cement.
ASTM C 387	Standard Specification for Packaged, Dry, Combined Materials for Concrete and High Strength Mortar.
ASTM C 478	Standard Specifications for Circular Precast Reinforced Concrete Manhole Sections.

AASHTO LRFD with version and modifications per Caltrans's latest Addendum.

2. Standard Specifications: SSPWC Section 206 -3 Gray Iron Casting.

3. Standard Plan S-387, S-140, S-142, and S-150**.**

1.4 CONTRACTOR SUBMITTALS

A. Submittals shall be made in accordance with the GENERAL REQUIREMENTS.

B. Shop Drawings: The CONTRACTOR shall furnish complete shop drawings for all precast maintenance hole sections, cast iron frames and covers, and appurtenances for review by the ENGINEER in accordance with SUBMITTALS of the GENERAL REQUIREMENTS. This shall include:

1. Concrete mix design and structural calculations of non-standard elements, signed and sealed by a California Registered Civil or Structural Engineer.

2. Joint details of all precast sections, and jointing between cast-in-place and precast segments.

3. Method of weathertightness, and watertight joints, when groundwater is within five (5) feet from the lowest joint, and associated test reports.

4. Joint materials and products including mortars, o-rings, gaskets, etc.

5. Lifting anchor and all other anchor information.

6. Details, products, and appurtenances for all lateral connections, and particular locations.

C. Non-Preapproved Products: For products which are not listed on the online approved products list (http://boe.lacity.org/apm/menu.cfm), the Contractor shall secure the services of a precaster to design, and fabricate the required precast reinforced concrete products, including the preparation of all associated plans, calculations, and documentation of associated appurtenances such as joints, gaskets, sealants, protective liners Type I, etc., to the full satisfaction of the ENGINEER. Calculations and plans shall be signed and sealed by a California registered Civil and/or Structural Engineer. Joints, gaskets, and sealants shall be tested to meet the requirements of the Contract. Non-approved maintenance hole products will not be considered unless there are none listed in the online approved products list.

1.5 DESIGN CRITERIA

A. Design of precast structures and maintenance holes shall conform to S-601-3, including cumulative supplements, and ASTM C478, including AASHTO LRFD with version and modifications per Caltrans' latest addendum.

B. For structures used as part of a sanitary sewer system, surfaces exposed to a corrosive environment shall be lined with an approved Type I liner System as indicated on the drawings. Mortar bed just below frame and cover shall be sealed with approved epoxy sealant.

1.6. QUALITY ASSURANCE

A. Fabrication: Contractor shall coordinate with the Bureau of Contract Administration Materials Control Inspection for required inspection prior to fabrication. See Section 01453 for detail requirements.

B. Field Inspection: All work is subject to inspection including excavation, placement, backfill, and finishing. The CONTRACTOR shall demonstrate that all maintenance holes and precast vault segments have been properly installed, level, with tight joints, at the correct elevations and orientations, and that the backfilling has been carried out in accordance with the Contract Documents. Coordinate with Inspector prior to start of work.

PART 2 - PRODUCTS

2.1 GENERAL

A. Products used shall be pre-approved products, up to date and in good standing, as listed in the online approved products list (http://boe.lacity.org/apm/menu.cfm), including maintenance holes and frame & covers. Where no acceptable pre-approved product exists, the CONTRACTOR shall retain the services of a precaster to design and fabricate a project specific structure. Plant approval shall be required.

2.2 GRANULAR BASE

A. Granular base shall conform to Section 02310 "Earthwork".

2.3 CONCRETE

A. Ready-mixed, conforming to ASTM C 94, Alternate B.

B. Mix design shall conform to SSPWC.

C. The concrete class for maintenance hole bases shall be 660-CW-4000, or 560-B-3250.

D. The concrete class for maintenance holes and precast structures shall be by strength, with a minimum compressive strength of 4,000 psi.

2.4 FORMS

A. Exterior exposed surfaces shall be plywood. Others shall be matched boards, plywood, or other approved material. Provide forms on all vertical surfaces. Trench walls, large rock, or earth will not be approved as form material.

2.5 REINFORCING STEEL

A. For maintenance holes, conform to ASTM A 615, Grade 40, or greater.

B. For precast vaults or structures, conform to ASTM A615 Grade 60, deformed bar.

C. All bars intended to be welded shall conform to ASTM A706 and AWS D1.4.

2.6 POURED-IN-PLACE MAINTENANCE HOLES

A. Poured-in-place type maintenance holes may be used provided all details of construction are accepted by the ENGINEER.

2.7 PRECAST MAINTENANCE HOLE SECTIONS

A. Precast maintenance hole sections shall be minimum 48 inches in diameter, conforming to Standard Plan S-387, S-142, S-150 (as applicable) and to ASTM C 478. Minimum wall thickness shall be 5 inches for reinforced sections. Provide eccentric cones for all maintenance holes. Cones shall have same wall thickness and reinforcement as maintenance hole section. Top and bottom of all sections shall be parallel. Provide Type I lining as noted on the drawings. Maintenance hole steps shall be cast in the Precast Sections by the manufacturer of the maintenance hole sections.

B. Joints shall be tongue-and-groove. The CONTRACTOR's attention is directed to specification for MORTAR hereinafter.

C. Prior to the delivery of any size of precast maintenance hole section on the jobsite, yard tests will be conducted at the point of manufacture. The precast sections to be tested will be selected at random from the stockpiled material which is to be supplied for the job. All test specimens will be mat tested, and shall meet the permeability test requirements of ASTM C 14.

2.8 PRECAST BASE SECTIONS AND BASES

A. At the option of the CONTRACTOR, precast base sections or maintenance hole bases may be used provided all details of construction are approved by the ENGINEER. Base sections shall have the base slab integral with sidewalls. Tie reinforcing steel to wall steel.

2.9 MAINTENANCE HOLE EXTENSIONS

A. Concrete grade rings for extensions shall be a maximum of 6 inches high and shall be approved by The INSPECTOR before installation.

B. In general, maintenance hole extensions will be used on all maintenance holes in roads or streets or in other locations where a subsequent change in existing grade may be likely. Extensions will be limited to a minimum of 12 inches and a maximum height of 2 feet 6 inches. Finish grade for maintenance hole covers shall conform to finished ground or street surface level, unless otherwise directed by the ENGINEER.

C. For raising of maintenance hole, conform to S-137.

2.10 MORTAR

A. Standard premixed mortar conforming to ASTM C 387 or proportion 1 part Portland cement to 2 parts clean, well-graded sand which will pass a 1/8-inch screen. Admixtures may be used not exceeding the following percentages of weight of cement: Hydrated lime, 10 percent; diatomaceous earth or other inert materials, 5 percent. Consistency of mortar shall be such that it will readily adhere to the pipe when using the standard tongue-and-groove type joint. If the Keylock type joint is used, the consistency shall be such that excess mortar shall be forced out of the groove and support is not provided for the next precast manhole section to be placed. Mortar mixed for longer than 30 minutes shall not be used.

2.11 PREFORMED SEALANTS

A. Preformed sealants may be used in lieu of mortar type joints and shall be Kent-Seal No. 2 manufactured by Hamilton Kent Manufacturing Company, Kent, OH; Ram-Nek, manufactured by K. T. Snyder Company, Inc., Houston, TX; or equal, meeting all requirements of Federal Specification SS-S-00210.

2.12 PIPE STUBOUTS FOR FUTURE SEWER CONNECTIONS

A. Pipe stubouts shall be the same type as approved for use in lateral, main, or trunk sewer construction. Strength classifications shall be the same class as in adjacent trenches. Where there are two different classes of pipe at a maintenance hole, the higher strength pipe will govern strength classification. Rubber gasketed watertight plugs shall be furnished with each stubout adequately braced against all hydrostatic or air test pressures.

2.13 PRECAST CONCRETE VAULT

A. The precast concrete vault shall be precast with a 28-day, 3,250 psi minimum compressive strength concrete and designed for AASHTO H-20 loading. Minimum dimensions are shown on the Drawings. Provide openings for pipes and grating as shown on the Drawings.

2.14 MAINTENANCE HOLE FRAMES AND COVERS

A. Cast iron of size and shape detailed on the Drawings. Covers shall have the letter "S" or "D" fitted tight in a 3-inch diameter circle in the center of the cover. Frame and cover shall conform to applicable City of Los Angeles Standard Plans. Test per S-601. Frames shall have a minimum clear opening of 30 inches.

B. Non-preapproved products shall conform to Standard Plan S-601 and the following requirements. The more stringent shall apply: Castings shall be tough, close-grained gray iron, sound, smooth, clean, free from blisters, blowholes, shrinkage, cold shuts, and all defects, and shall conform to ASTM A 48, Class 35B. Plane or grind bearing surfaces to ensure flat, true surfaces. Covers shall be true and seat within ring at all points.

PART 3 - EXECUTION

3.1 EXCAVATION AND BACKFILL

A. Conform to applicable portions of Section 02310 "Earthwork". Backfill around maintenance holes shall be of the highest quality of trench backfill immediately adjacent, as shown on the Drawings.

3.2 GRANULAR BASE

A. Remove water from the excavation. Place a minimum of 6 - inches of granular base and thoroughly compact with a mechanical or power vibrating tamper to a minimum of 90 percent relative compaction.

3.3 CONCRETE BASE

A. Construct concrete base in conformance with the details shown on the Drawings. Vibrate to densify the concrete and screed so that the first precast maintenance hole section to be placed has a level, uniform bearing for the full circumference.

B. Deposit sufficient mortar on base to assure watertight seal between base and maintenance hole wall or place the first precast section of maintenance hole in concrete base before concrete has set, if preferred. First section shall be properly located and plumb.

C. If material in bottom of trench is unsuitable for maintenance hole, excavate below the flow line as directed by ENGINEER, and backfill to required grade with granular base per geotechnical recommendations.

3.4 PLACING PRECAST MAINTENANCE HOLE SECTIONS

A. Clean ends of sections of foreign materials. Thoroughly wet joint with water prior to placing mortar. Place mortar on groove of lower section. Set next section in place. Fill joint completely with mortar of the proper consistency. Trowel interior and exterior surfaces smooth on standard tongue-and-groove joints. Wipe or otherwise clean the excess mortar from the inside of the Keylock joint.

B. When a Keylock joint is used, it is the intent that the void between the tongue-and-groove be completely filled with mortar, and that the interior and exterior end faces of the section to be placed seat fully on the previously placed section.

C. Prevent mortar from drying out and cure by applying an approved curing compound or comparable approved method. Chip out and replace all cracked or defective mortar. Completed maintenance holes shall be rigid and watertight.

3.5 PREFORMED PLASTIC GASKETS

A. Carefully inspect precast maintenance hole sections to be joined. Sections with chips or cracks in the tongue shall not be used. Preformed plastic gaskets shall be installed in strict conformance with the manufacturer's recommendations. Only pipe primer furnished by the gasket manufacturer will be approved.

3.6 MAINTENANCE HOLE INVERT

A. Construct maintenance hole inverts in conformance with details shown on the Drawings, and with smooth transitions to ensure an unobstructed flow through maintenance hole. Remove all sharp edges or rough sections which tend to obstruct flow. Where a full section of pipe is laid through a maintenance hole, break out the top section as indicated and cover exposed edge of pipe completely with mortar. Trowel all mortar surfaces smooth.

B. For benches of maintenance holes greater than 48 inches in diameter, line the surface and make it non-skid per SSPWC 311-1.7.

3.7 FLEXIBLE JOINTS

A. Provide joints in all pipe not more than 1.5 feet from maintenance hole walls. Lay pipes entering maintenance holes on firmly compacted granular base. Granular base shall be as specified hereinbefore.

B. Where the last joint of the line laid up to the maintenance hole is more than 1.5 feet from the maintenance hole base, a 6-inch concrete encasement shall be constructed around the entire pipe from the maintenance hole base to within 1.5 feet of the pipe joint. The pipe encasement shall be constructed monolithically with the maintenance hole base. Pipes laid

out of the maintenance hole shall be shortened to ensure the first joint is no more than 1.5 feet from the maintenance hole base.

3.8 PERMANENT PLUGS

A. Clean interior contact surfaces of all pipes to be cut off or abandoned as shown. Construct concrete plugs at the end at of all pipes 18 inches or less in diameter. Minimum length of concrete plugs shall be 8 inches. For pipe 21 inches and larger, the plugs may be constructed of common brick or concrete block. Plaster the exposed face of block or brick plugs with mortar. All plugs shall be watertight and capable of withstanding all internal and external pressures without leakage.

3.9 MAINTENANCE HOLE EXTENSIONS

A. Install extensions in conformance with the details shown on the Drawings, and to height determined by the ENGINEER. Lay grade rings in mortar with sides plumb and tops level. Seal joints with mortar as specified for maintenance hole sections. Extensions shall be watertight.

3.10 MAINTENANCE HOLE FRAMES AND COVERS

A. Install frames and covers on top of maintenance holes to positively prevent all infiltration of surface or groundwater into maintenance holes. Frames shall be set in a bed of mortar with the mortar carried over the flange of the ring as shown in the Maintenance Hole Details on the Drawings. Set frames so that tops of covers are flush with surface of adjoining pavement or ground surface, unless otherwise shown or directed.

3.11 MAINTENANCE HOLES OVER EXISTING SEWERS

A. Construct maintenance holes over existing operating sewer lines at locations shown. Perform necessary excavation as specified above, break into existing line, and construct maintenance hole.

B. Maintain flow through existing sewer lines at all times, and protect new concrete and mortar work for a period of 7 days after concrete has been placed. Advise ENGINEER of plans for diverting sewage flow and obtain ENGINEER's approval before starting. ENGINEER's approval will not relieve CONTRACTOR of responsibility for maintaining adequate capacity for flow at all times and adequately protecting new and existing work.

C. Construct the new base under the existing sewer and the precast sections as specified herein.

D. Break out the existing pipe within the new maintenance hole, cover the edges with mortar, and trowel smooth.

3.12 SPECIAL MAINTENANCE HOLES

A. Construct special maintenance holes in conformance with applicable parts of these Specifications and as shown on the Drawings. Maintenance holes shall be in general conformance to S-150.

3.13 PRECAST CONCRETE VAULT

A. Install precast concrete vault at the locations shown on the Drawings. Provide necessary excavation and backfill as specified herein.

END OF SECTION

SECTION 02666
HIGH DENSITY POLYETHYLENE GEOMEMBRANE LINERS

PART 1 GENERAL

1.01 SUMMARY

A. Section includes:

1. High density polyethylene geomembrane waterproofing liner.

1.02 REFERENCES

A. ASTM International (ASTM):

1. D746 - Standard Test Method for Brittleness Temperature of Plastics and Elastomers by Impact.

2. D792 - Standard Test Methods for Density and Specific Gravity (Relative Density) of Plastics by Displacement.

3. D1004 - Standard Test Method for Tear Resistance (Graves Tear) of Plastics Film and Sheeting.

4. D1238 - Standard Test Method for Flow Rates of Thermoplastics by Extrusion Plastometer.

5. D1505 - Standard Test Method for Density of Plastics by the Density-Gradient Technique.

6. D1603 - Standard Test Method for Carbon Black in Olefin Plastics.

7. D4218 - Standard Test Method for Determination of Carbon Black Content in Polyethylene Compounds by the Muffle Furnace Technique.

8. D4437 - Standard Practice for Non Destructive Testing (NDT) for Determining the Integrity of Seams Used in Joining Flexible Polymeric Sheet Geomembranes.

9. D4833 - Standard Test Method for Index Puncture Resistance of Geomembranes and Related Products.

10. D5199 - Standard Test Method for Measuring the Nominal Thickness of Geosynthetics.

11. D5397 - Standard Test Method for Evaluation of Stress Crack Resistance of Polyolefin Geomembranes Using Notched Constant Tensile Load Test.

12. D5596 - Standard Test Method for Microscopic Evaluation of the Dispersion of Carbon Black in Polyolefin Geosynthetics.

13. D5721 - Standard Practice for Air Oven Aging of Polyolefin Geomembranes.

14. D5885 - Standard Test method for Oxidative Induction Time of Polyolefin Geosynthetics by High Pressure Differential Scanning Calorimetry.

15. D6370 - Standard Test Method for Rubber—Compositional Analysis by Thermogravimetry (TGA).

16. D6693 - Standard Test Method for Determining Tensile Properties of Nonreinforced Polyethylene and Nonreinforced Flexible Polypropylene Geomembranes.

17. D8117 - Standard Test Method for Oxidative Induction Time of Polyolefin Geosynthetics by Differential Scanning Calorimetry.

1.03 TERMINOLOGY

A. The words and terms listed below are not defined terms that require initial capital letters, but, when used in this Section, have the indicated meaning.

1. Batch: Quantity of resin, usually 1 railcar, used in fabrication of high density polyethylene geomembrane rolls with number corresponding to resin batch.

2. Bridging: Condition existing when geomembrane is not in contact with underlying material.

3. Extrudate: High-density polyethylene material produced in form of rods used to extrusion weld panels of geomembrane together.

4. Geomembrane: Very-low permeability synthetic flexible membrane liner barrier used to minimize fluid migration.

5. Geomembrane Contractor: Entity responsible of manufacturing, shipping, field handling, transporting, storing, deploying, seaming, temporarily restraining against wind, and installing geomembrane.

6. Geomembrane subsurface: Material surface upon which geomembrane is placed.

7. Quality assurance consultant or testing laboratory: Entity, independent from the Contractor, responsible for conducting laboratory tests on samples of geomembrane obtained at the Site.

8. Panel: Unit of geomembrane area, roll, or portion of roll that will be seamed on the Site.

9. Panel layout drawings: Drawings indicating panel numbers, field seams, and details.

10. Subgrade: In situ material.

1.04 SUBMITTALS

A. Product data: Include the manufacturer's specifications, description of seaming by extrusion welding and hot wedge welding, descriptive drawings, product identification, supplier of polymer resin, and recommended method of material handling and storage prior to installation.

B. Quality assurance program: Include polymer resin supplier, product identification, acceptance testing, production testing, installation testing, and documentation of changes, alterations, repairs, retests, and acceptance.

C. Statement of resin and geomembrane production dates.

D. Factory test results and material certification: Demonstrate conformance with Contract requirements and certify that material delivered is similar and of the same formulation as that for which test results are submitted.

E. Shop Drawings: Include installation drawings, procedures, and schedule, geomembrane sheet layout with proposed sizes, number, position, and sequence of sheet placement, and location of field seams and intermediate and final anchor trenches.

F. Factory visit information: Contact names, telephone numbers, addresses, and production schedule for possible visit by the Engineer to the manufacturing plant during manufacture of sheets for the Project.

G. Subsurface certification: Certify acceptance of subsurface.

H. Welder certification: Certify availability of each welder's performance record, including linear feet of welds completed, number of samples tested and weld test failure rate, and qualifications.

I. Record drawings: Include identity and location of each repair, cap strip, penetration, boot, and sample taken from installed geomembrane for testing.

J. Quality control record: Identify each test by date and sample, date of test, sample location, name of individual who performed test, and standard test method used.

K. Weld test summary report: Show normal distribution of test results, and individual test results identifying high, low, and average of 5 coupon samples for each test.

1.05 QUALITY ASSURANCE

A. Geomembrane Contractor qualifications: Manufacturer and installer of geomembranes for a minimum of 20 projects, similar in complexity and size as the Project, and a minimum of 20 million square feet of geomembrane; employer of the following personnel for the Project:

1. Superintendent or foreman with minimum experience on 5 projects similar in complexity and size as the Project.

2. Master welders with a minimum of 10,000,000 square feet of geomembrane seaming experience with a maximum 2 percent weld failure rate.

3. Welders with minimum of 1,000,000 square feet of geomembrane seaming experience with a maximum 2 percent weld failure rate.

B. Engage and pay for services of a construction quality assurance consultant or testing laboratory as specified in Section 01453 - Sampling, Testing and Fabrication Inspection.

1.06 DELIVERY, STORAGE, AND HANDLING

A. Deliver, unload, and store geomembrane with minimum handling.

B. Protect materials from mud, soil, dirt, and debris.

C. Store geomembrane directly on prepared level surface, maximum 3 rolls high.

PART 2 PRODUCTS

2.01 GEOMEMBRANE

A. Manufacturers: One of the following or equal:

1. Agru America.

2. GSE Environmental.

B. Type: First quality unmodified high density polyethylene, designed and manufactured specifically for reservoir and pond lining containing the following:

1. No plasticizers, fillers, chemical additives, reclaimed polymers, or extenders.

2. Approximately 2 percent carbon black.

3. Maximum 1.5 percent anti-oxidants and heat stabilizers.

C. Thickness: 40 mils.

D. Width: Minimum 22.5 feet with no factory seams.

E. Roll identification: Unique number printed on label affixed to inside and outside of roll, and continuous name of manufacturer, thickness, material type, and date of manufacture printed on membrane.

F. Surface texture: Smooth or textured.

G. Resin properties:

1. Specific gravity: Minimum 0.935 grams per cubic centimeter when tested in accordance with ASTM D1505, Method A; or ASTM D792, Method B.

2. Melt index: Maximum 1.0 grams per 10 minutes when tested in accordance with ASTM D1238, Procedure B.

H. Membrane properties: As specified in Attachment A - High Density Polyethylene Geomembrane Liner Properties.

2.02 RELATED MATERIALS

A. Extrudate: Made from same resin as geomembrane, free of contamination by moisture or foreign matter, additives thoroughly dispersed.

B. Cleaning solvents and adhesives: As recommended by the geomembrane manufacturer.

2.03 EQUIPMENT

A. Welding equipment: Equipped with gauges showing temperature at nozzle for extrusion welder, or at wedge for wedge welder.

B. Field tensiometer: Build to ASTM specifications; accompanied by evidence of recent calibration; motor driven with jaws capable of traveling at 2 inches per minute; equipped with gauge that measures force in unit pounds exerted between jaws with digital readout.

C. Punch press: Capable of cutting specimens in accordance with ASTM D4437.

D. Vacuum box: With transparent viewing window on top and soft, closed-cell neoprene gasket attached to bottom; rigid housing equipped with bleed valve and vacuum gauge; separate vacuum source connected to vacuum box; capable of inducing and holding 5-pound per square inch vacuum.

PART 3 EXECUTION

3.01 EXAMINATION

A. Examine areas and conditions. Correct conditions detrimental to timely and proper installation of geomembrane.

3.02 PREPARATION

A. Repair damage to geomembrane subsurface during geomembrane deployment or other activities prior to installation.

B. Verify smooth subsurface without protrusions, sharp objects and deleterious materials. Round excavation and grade change edges to a minimum 6-inch radius.

C. Place geomembrane when air temperature is greater than 25 degrees Fahrenheit and increasing, and less than 100 degrees Fahrenheit, unless otherwise accepted by the Engineer.

3.03 DEPLOYMENT

A. Assign each deployed panel with simple and logical identifying code consistent with the panel layout drawing.

1. Deploy no more panels than can be welded during same day.

2. Do not leave temporary tack welded seams overnight.

3. Shingle panels on slopes with upper panels overlapping lower panels.

B. Orient panels perpendicular to line of slope crest, or down and not across slope. Locate seams parallel to crest or toe of slope for slopes greater than 10 horizontal to 1 vertical at least 6 feet away from crest or toe.

C. Unroll geomembrane panels using methods that will not damage, stretch, or crimp geomembrane.

1. Protect underlying subsurface from damage.

2. Use ballast that will not damage geomembrane to prevent wind uplift.

3. Minimize wrinkles.

4. Remove folds.

D. Do not engage in activities that may damage geomembrane.

1. Wear shoes that will not damage geomembrane.

2. Prohibit smoking while working on geomembrane.

E. Prohibit vehicular traffic directly on geomembrane.

1. Prevent equipment from damaging geomembrane by handling, trafficking, leakage of hydrocarbons, or other means.

2. Do not use geomembrane surface as work area, for preparing patches, storing tools and supplies, or other uses.

3. Spread out protective cover as work area when needed.

F. Geomembrane liner installation at Cascading Water Feature:

1. Soil backfill placed over geomembrane liner shall not be compacted.

2. Boulders shall not be placed directly on top of geomembrane liner. Boulders shall be placed carefully as not to damage liner.

G. Provide sufficient material to allow for geomembrane shrinkage and contraction to avoid bridging. Obtain the Engineer's acceptance of methods used to determine amount of additional material.

3.04 SEAMING

A. Use seam coding system that is compatible with panel coding system.

1. Require master welders to supervise other welders during welding operations.

B. Clean geomembrane surface of grease, moisture, dust, dirt, debris, or other foreign material with solvents or adhesives.

1. Overlap panels by a minimum 4 inches at welds.

2. Weld seams to outside edge of panels placed under anchor berms or in anchor trenches.

C. Cut fishmouths or wrinkles at seam overlaps to achieve flat overlap.

1. Where overlap is more than 3 inches, extrusion weld or patch cut fishmouths or wrinkles.

2. With less than 3-inch overlaps, use oval or round patch that extends at least 6 inches beyond cut in every direction.

D. Weld seams only when ambient temperature is between 35 and 110 degrees Fahrenheit as measured 6 inches above geomembrane surface unless otherwise accepted by the Engineer.

E. Extrusion welding:

1. Tack bond adjacent panels together using procedures that do not damage geomembrane, allow required tests to be performed, and are not detrimental to final seaming.

2. Free welding apparatus of heat-degraded extrudate before welding.

3. Abrade geomembrane surface no more than 1/4 inch beyond weld bead area with disc grinder, or equivalent, not more than 1/2 hour before extruding seam.

4. Bevel top edges of 60-mil thick geomembrane or thicker at 45 degrees using hand held grinders.

5. Grind ends of seams more than 5 minutes old when restarting weld.

6. Do not grind more than 10 percent of liner thickness.

F. Hot-wedge seaming:

1. Use automated, vehicular-mounted welding apparatus, equipped with devices giving applicable temperatures and pressures.

2. Grind edges of cross seams to smooth incline, top and bottom, prior to welding.

G. Trial welds:

1. Perform on geomembrane to verify welding equipment operations and performance of seaming methods and conditions.

2. Make a minimum 2 trial welds per day or shift per welding apparatus.

3. Make a minimum trial welds prior to start of work and at mid shift.

4. Make welds under same surface and environmental conditions as production welds.

H. Trial weld testing:

1. Cut 4-foot long by 2-foot wide sample with seam centered lengthwise.

2. Cut three 1-inch wide test strips from trial weld.

3. Test each specimen in field for peel and shear.

4. Retain remaining sample for future testing.

5. For double-wedge welding, test both welds individually.

3.05 FIELD QUALITY CONTROL

A. Conformance testing by testing laboratory:

1. Obtain 1 sample, 3 foot long by entire width of roll, excluding first 3 feet, per 100,000 square feet.

2. Perform test to determine geomembrane density, thickness, tensile strength, carbon black content, and carbon black dispersion.

B. Other testing by the Contractor:

1. Non-destructively test field seams over full length using vacuum test unit, air pressure for double fusion seams only, or other methods acceptable to the Engineer.

2. Perform vacuum, air-pressure, spark testing as seaming progresses.

C. Vacuum testing:

1. Use equipment consisting of 2 vacuum box assemblies with rigid housing, transparent viewing window, soft neoprene gasket attached to bottom, port hole or valve assembly, vacuum gauge, vacuum pump assembly with pressure control, rubber pressure and vacuum hose with fittings and connections, soapy solution and applicator.

2. Brush soapy solution on geomembrane.

3. Place vacuum box over wetted seam area.

4. Ensure leak-tight seal.

5. Apply vacuum of approximately 5 pounds per square inch.

6. Examine geomembrane through viewing window for presence of soap bubbles for a minimum of 15 seconds.

7. Mark areas where soap bubbles appear.

8. Repair defective areas.

D. Air pressure testing for double seams with enclosed space:

1. Use equipment consisting of manual or motor driven air pump with pressure gauge capable of generating and sustaining pressure over 25 pounds per square inch and mounted on cushion to protect geomembrane, rubber hose with fittings and connections, sharp hollow needle, or other Engineer-accepted pressure feed device, and pressure gauge with accuracy of 1 pound per square inch.

2. Seal both ends of seams to be tested.

3. Insert needle or other pressure-feed device acceptable to the Engineer into channels created by double-wedge welds.

4. Energize air pump to a minimum pressure of 25 pounds per square inch, close valve, and sustain pressure for a minimum of 5 minutes.

5. When pressure loss exceeds 2 pounds per square inch or does not stabilize, locate and repair defective area.

6. Puncture opposite end of seams to release air.

7. When blockage is present, locate and test seam on both sides of blockage.

8. Remove needle or other pressure-feed device acceptable to the Engineer and seal penetration holes by extrusion welding.

E. Spark testing:

1. Test extrusion welded seams that cannot be tested by vacuum box.

2. Place 24-gauge copper wire 1/8 inch under top sheet overlap.

3. Test with a holiday detector operating at 20,000 volts.

F. Destructive test sampling:

1. Collect one 18- by 36-inch sample with seam centered lengthwise, per 500 feet of seam length where directed by testing laboratory.

2. Testing laboratory will number each sample, mark sample number and location on the panel layout drawing, and cut sample into 3 equal parts: 1 for the Owner, 1 for the Contractor, and 1 for testing laboratory testing.

3. Immediately repair holes in geomembrane resulting from sampling.

4. Vacuum test repaired area for continuity.

G. Laboratory testing:

1. Test seam welds from samples for peel adhesion and shear strength in accordance with ASTM D4437.

2. Test a minimum 5 coupons from each sample for each test method.

3. Test adjacent coupons by different testing methods.

4. Test both welds of double-wedge seam samples.

5. Declare failure when welds exhibit film tearing bond type of separation before geomembrane or when shear strength and peel adhesion fails to withstand the following minimum stresses:

Test	Minimum Acceptable Stress (lbs/inch width)			
	40 mil	60 mil	80 mil	100 mil
Shear Strength	86	126	171	216
Peel Adhesion				
Wedge Weld	57	84	114	144
Extrusion Weld	48	70	95	120

6. Notify parties of Contract of testing results verbally within 24 hours and in writing within 7 days of receipt of samples.

H. Repair defective seams uncovered by testing by one of the following methods:

1. Reconstruct seams between 2 passed test locations.

2. Trace welds to intermediate locations at least 10 feet or to where seams end, in both directions from failed test locations.

a. Check adjacent seams welded using same welding device when required to obtain additional samples.

b. Take bounding samples for testing.

c. When bounding samples pass, reconstruct seams between passed test locations.

d. When bounding samples fail, repeat process until additional bounding samples pass.

I. Reconstruct seams by extrusion welding of previously wedge welded seams, cap stripping of seams, or replacing seams with new 1 foot wide panels and welding in place, or other Engineer-accepted method.

3.06 REPAIR OF DEFECTS

A. Examine geomembrane for defects, holes, blisters, undispersed raw materials, and signs of contamination by foreign matter.

1. Clean geomembrane surfaces during examination.

2. Repair and non-destructively test suspect locations.

3. Do not cover geomembrane at locations that have been repaired until accepted by the Engineer.

B. Remove and replace geomembrane that cannot be satisfactorily repaired with new.

C. Repair portions of geomembrane exhibiting flaws, or failing testing by one of the following methods or Engineer-accepted method:

1. Patching: For holes larger than 3/8 inch diameter, tears over 2 inches long, undispersed raw materials, and contamination by foreign matter.

2. Abrading and re-welding: For small seam sections less than 12 inches long.

3. Spot welding: For small tears less than 2 inches long, pinholes, or other minor, localized flaws.

4. Capping: For large lengths of failed seams.

5. Replacement with new: For unsatisfactory materials.

D. For extrusion welds only, repair geomembrane surfaces to be repaired within 1/2 hour of being abraded.

1. Extend patches or caps at least 6 inches beyond edges of defects.

2. Round corners of materials to be patched and patches to a minimum 3-inch radius.

3. Cut geomembrane below large caps to avoid water or gas collection between 2 sheets.

E. Verify repairs by testing as determined by testing laboratory.

END OF SECTION
(SEE ATTACHMENT)

ATTACHMENTS TO SECTION 02666

Attachments to Technical Specifications Section 02666 consists of one (1) document, as follows:

ATTACHMENT NUMBER	TITLE OF ATTACHMENT	NUMBER OF PAGES IN THIS ATTACHMENT
02666-A1	High Density Polyethylene Geomembrane Liner Properties	2

ATTACHMENT A - HIGH DENSITY POLYETHYLENE GEOMEMBRANE LINER PROPERTIES

THIS PAGE INTENTIONALLY LEFT BLANK

HIGH DENSITY POLYETHYLENE GEOMEMBRANE LINER PROPERTIES

Properties	Test Value								Testing Frequency (minimum)
	Test Method	30 mils	40 mils	50 mils	60 mils	80 mils	100 mils	120 mils	
Thickness (min. ave.)	ASTM D5199	Nom.	Nom.	Nom.	Nom.	Nom.	Nom.	Nom.	10 times per roll
- lowest individual of 10 values		-10%	-10%	-10%	-10%	-10%	-10%	-10%	
Density mg/l (min.)	ASTM D1505 ASTM D792	0.935 g/cc	0.935 g/cc	0.935 g/cc	0.935 g/cc	0.935 g/cc	0.935 g/cc	0.935 g/cc	200,000 lb
Melt Flow Index (g/10min) maximum value	ASTM D1238	1.0	1.0	1.0	1.0	1.0	1.0	1.0	per each formulation
Low Temperature Brittleness (°F)[9]	ASTM D746	-112	-112	-112	-112	-112	-112	-112	N/A
Tensile Properties[1] (min. ave.) ☐ Yield strength ☐ Break strength ☐ Yield elongation ☐ Break elongation	ASTM D6693 Type IV	 63 lb/in. 114 lb/in. 12% 700%	 84 lb/in. 152 lb/in. 12% 700%	 105 lb/in 190 lb/in. 12% 700%	 126 lb/in. 228 lb/in. 12% 700%	 168 lb/in. 304 lb/in. 12% 700%	 210 lb/in. 380 lb/in. 12% 700%	 252 lb/in. 456 lb/in. 12% 700%	20,000 lb
Tear Resistance (min. ave.)	ASTM D1004	21 lb	28 lb	35 lb	42 lb	56 lb	70 lb	84 lb	45,000 lb
Puncture Resistance (min. ave.)	ASTM D4833	54 lb	72 lb	90 lb	108 lb	144 lb	180 lb	216 lb	45,000 lb
Stress Crack Resistance[2]	ASTM D5397 (App.)	300 hr.	300 hr.	300 hr.	300 hr.	300 hr.	300 hr.	300 hr.	per GRI-GM13
Carbon Black Content (range)	ASTM D4218[3]	2.0-3.0%	2.0-3.0%	2.0-3.0%	2.0-3.0%	2.0-3.0%	2.0-3.0%	2.0-3.0%	20,000 lb
Carbon Black Dispersion	ASTM D5596	[4]	[4]	[4]	[4]	[4]	[4]	[4]	45,000 lb
Oxidative Induction Time (OIT) (min. ave.)[5] Standard OIT — or — High Pressure OIT	 ASTM D8117 ASTM D5885	 100 min. 400 min.	 100 min. 400 min.	 100 min. 400 min.	 100 min. 400 min.	 100 min. 400 min.	 100 min. 400 min.	 100 min. 400 min.	200,000 lb

Properties	Test Value								Testing Frequency (minimum)
	Test Method	30 mils	40 mils	50 mils	60 mils	80 mils	100 mils	120 mils	
Oven Aging at 85°C[5][6]	ASTM D5721								per each formulation
Standard OIT (min. ave.) -% retained after 90 days	ASTM D8117 ASTM D5885	55%	55%	55%	55%	55%	55%	55%	
— or —									
High Pressure OIT (min. ave.) -% retained after 90 days		80%	80%	80%	80%	80%	80%	80%	
UV Resistance[7] High Pressure OIT (min. ave.) -% retained after 1,600 hrs[8]	ASTM D5885	50%	50%	50%	50%	50%	50%	50%	per each formulation

Notes:

(1) Machine direction (MD) and cross machine direction (XMD) average values should be on the basis of 5 test specimens each direction. Yield elongation is calculated using a gauge length of 1.3 inches. Break elongation is calculated using a gauge length of 2.0 inches.
(2) Yield stress used to calculate the applied load for the SP-NCTL test should be the manufacturer's mean value via MQC testing.
(3) Other methods such as ASTM D1603 (tube furnace) or ASTM D6370 (TGA) are acceptable if an appropriate correlation to ASTM D4218 (muffle furnace) can be established.
(4) Carbon black dispersion (only near spherical agglomerates) for 10 different views: 9 in Categories 1 or 2, and 1 in Category 3.
(5) Manufacturer has the option to select either one of the OIT methods listed to evaluate the antioxidant content in the geomembrane.
(6) It is also recommended to evaluate samples at 30 and 60 days to compare with the 90-day response.
(7) Condition of the test should be 20 hr. UV cycle at 75°C followed by 4 hr. condensation at 60°C.
(8) UV resistance is based on percent retained value regardless of the original HP-OIT value.
(9) Certification only required.

SECTION 02710
YARD WORK AND STREET WORK

PART 1 - GENERAL

1.1 DESCRIPTION

A. Provide all yard and street work indicated on the Drawings and in other Sections of the Project Manual; including but not limited to:

1. Asphalt concrete paving.

2. Portland cement concrete paving, sidewalk and driveways.

3. Joint sealant and caulking.

4. Parking lot striping and disabled symbol marking.

5. Street Work: Curbs, gutters, tree guards and gratings.

B. Related Sections:

1. Documents affecting work of this Section include but are not necessarily limited to the GENERAL CONDITIONS, SUPPLEMENTARY CONDITIONS, DIVISION 1 - GENERAL REQUIREMENTS and other Sections of the Project Manual.

2. Contractor's Use of the Premises in Section 01140.

3. Solid Resource Management in Section 01150.

4. Demolition and removal of existing sidewalk, curbs, gutters, driveways and existing site improvements in Section 02220 - SITE DEMOLITION.

5. Earthwork including excavating, grading and filling and select base materials in Section 02220.

6. Irrigation System in Sections 02810.

7. Landscaping 02900.

8. Concrete work and concrete paving in Section 03300.

9. Concrete form work in Section 03100.

10. Concrete Reinforcement in Section 03200.

11. Caulking and Sealant in Section 07920.

1.2 QUALITY ASSURANCE

A. Labor: Use adequate number of skilled laborers who are thoroughly trained and experienced in the necessary crafts and who are completely familiar with the specified requirements and the methods needed for proper performance of the work of this Section.

B. Codes and Regulations:

1. Conform to the applicable 2025 Los Angeles City Building Code and Amendments, the Standard Specifications for Public Works Construction (SSPWC), State of California Department of Transportation Standard Specifications, Los Angeles City Bureau of Engineering Brown Book, latest edition and provisions hereinafter specified in the Project Manual.

C. Permits: Submit inspection/acceptance certificates required by the governing authorities and pay for all the required permits, plan check, inspections, and fees. Arrange for and make required inspections and tests.

D. Survey: According to Section 01112 - SUMMARY OF THE WORK, the Contractor shall furnish all surveying necessary for the work. All work shall conform to the lines, elevations, and grades shown on the drawings. The Contractor shall submit the grade sheets to the City Engineer for review.

1.3 ALTERATIONS, REPAIRS AND REPLACEMENTS

A. As required for complete construction of a project; materials and construction to match existing adjacent work where occur in quality and appearance and conform to applicable provisions of the Project Manual.

B. Maintain vehicular and pedestrian traffic in accordance with W.A.T.C.H. (Work Area Traffic Control Handbook, latest edition)

1.4 PROTECTION

A. Required: Furnish, erect and maintain fences, barriers, lights and signs as necessary, in order to protect the public, City personnel, Contractor's personnel, existing work and work of this Section under this Contract.

B. All existing structures beneath the pavement shall be protected from any operation. No impact tool shall be allowed in the demolition of the existing pavement which may affect the existing structure. All sewerage and storm drain structures, utility vault, etc., extending two (2) inches or more above the new subgrade shall be removed by the Contractor to the new subgrade before paving. Structures projecting less than 2 inches above the subgrade may be paved over and later adjusted to grade.

1.5 DELIVERY, STORAGE AND HANDLING

A. Delivery: Deliver materials, and products and equipment to the job-site where directed by the City Engineer.

B. Storage: Store materials where located on the job-site not interfering with work operations of this Section as directed by the City Engineer and easily accessible when needed to be installed or used.

C. Handling: Handle materials, etc. safely and avoiding damage to such materials prior to installation.

1.6 SUBMITTALS (As Applicable)

A. General: Comply with provisions of SECTION 01330 - SUBMITTALS of DIVISION 1 - GENERAL REQUIREMENTS of the Project Manual.

B. Concrete:

1. Portland Cement Mill Certificate: Submit to the City Engineer of each load showing conformance with the requirements and applicable Section of the SSPWC or otherwise the Testing Laboratory shall test the cement as per ASTM C150 - SPECIFICATION FOR PORTLAND CEMENT.

2. Design Mix and Curing Methods.

C. Asphaltic Concrete:

1. Submit a mix design for asphaltic concrete prepared by a material laboratory under the direction of a California Registered Engineer.

2. Certificates: Submit certificates signed by the materials producer and the asphalt paving Subcontractor, stating that materials meet or exceed the specified requirements prior to any fabrication. Submit the certified delivery tickets for each truckload of asphaltic material delivered to the job site.

D. Product Data: Submit to the City Engineer the data on all proprietary items, materials, etc. to be used in the work of this Section, as conforming to the specified requirements of this Section.

E. Shop Drawings:

1. Submit the joint layouts in concrete pavements.

F. Spreading Schedule: At least five (5) working days prior to commencing work, the Contractor shall submit its spreading schedule to the City Engineer for approval. The schedule shall allow residents on the street to be sealed ample "on street" parking within a reasonable distance from their homes. The Contractor shall notify the residents and businesses of the work and shall post temporary "No Parking" signs.

1.7 RECORD DRAWINGS

A. Required: Clearly mark changes, deletions and/or additions to the work of this Section conforming to provisions of Section 30 - RECORD DRAWINGS AND RECORD PROJECT MANUAL of the GENERAL CONDITIONS of the Project Manual.

1.8 REMOVAL AND CLEAN UP

A. Remove and recycle all surplus materials, debris and rubbish resulting from work of this Section conforming to provisions of Section 01572 - SOLID RESOURCE MANAGEMENT and Section 01740 - CLEANING of DIVISION 1 - GENERAL REQUIREMENTS of the Project Manual.

PART 2 - PRODUCTS

2.1 CONCRETE MATERIALS

A. Furnish concrete material, form work and reinforcing in accordance with applicable requirements specified in the drawings and Section 03300 – CAST-IN-PLACE CONCRETE, Section 03100 - CONCRETE FORM WORK, and Section 03200 - REINFORCEMENT, respectively.

C. 2,500 psi concrete conforming to Section 03300 – CAST-IN-PLACE CONCRETE.

D. 2,500 psi and 6-inch by 6-inch reinforcement steel or 10 gage welded wire mesh conforming to Section 03200 - REINFORCEMENT.

E. Caulking for Expansion and Control Joints: As specified in Section 07920. Filler of Use with Elastomeric Sealer: Plain type as per ASTM D 1752 Type II or Type III.

2.2 ASPHALT CONCRETE MATERIALS

A. In accordance with Section 203-6 - ASPHALT CONCRETE and mix in accordance with Section 203-6.5 - PROPORTIONING of the SSPWC. Unless otherwise specified, reclaimed asphalt pavement (RAP), RAP Bituminous material or mixture shall not be used without City Engineer's approval and payment adjustment.

B. Asphalt: PG64-10-50 or PG64-10-75 Viscosity grades conforming to State of California Department of Transportations, Standard Specifications Section 92-1.02(B).

C. For 4-Inch and Thicker A.C. Paving, : Two course applications, Class B – PG64-10-75 with 3/4-inch (maximum) size aggregates for first course. Top course (second course) shall be 2-inches thick wearing surface course, Class C2 – PG64-10-75 with 1/2-inch maximum size aggregates.

2.3 MISCELLANEOUS MATERIALS

A. Aggregate Base (Select Base): As specified in Section 02310 - EARTHWORK.

B. Prime Coat: Consisting of Grade SC-250 liquid asphalt, applied at a rate between 0.45 L/m^2 and 1.15 L/m^2 (0.10 and 0.25 gallon per square yard), conforming to Section 302-5.3 - PRIME COAT of the SSPWC.

C. Tack Coat/Paint Binder: Grade SS-1h emulsified asphalt at an approximate rate of 0.25 L/m5 to 0.45 L/m5 (0.05 to 0.10-gallon per square yard), conforming to Section 302-5.4 -TACK COAT of the SSPWC.

D. Parking Lot Striping Material: Fuller "Traffic Line Paint" or J. E. Bauer Co. "Zonelac Traffic Paint" or other colors as otherwise noted on drawings.

J. Wood Headers: In accordance with Section 302-5.5 - DISTRIBUTION AND SPREADING of the SSPWC 2" x 4 inch size (within 2" inches of the thickness of the pavement) edging with 2" x 4" stakes. Construction Heart Grade Redwood (S1S1E).

L. Grout: Non-shrink grout; Embeco by Master Builders, Inc., 8978 Haven Ave. #A, Rancho Cucamonga, CA 91730 (800) 228-3315 or equal.

PART 3 - EXECUTION

3.1 JOB-SITE CONDITIONS

A. Examine the areas and conditions under which work of this Section will be performed.

1. Correct conditions detrimental to timely and proper completion of the work, as directed by the City Engineer.

2. Do not proceed until such detrimental conditions are corrected.

B. Comply with stormwater pollution control measures as indicated in Section 02310 - EARTHWORK of the Project Manual.

3.2 ASPHALT CONCRETE PAVING

A. Materials: As hereinbefore specified.

B. Subgrade Preparation: Prior to placing the selected base materials, compact the upper 8" of subgrade to 90 percent relative compaction, as per Section 301-1 - SUBGRADE PREPARATION of SSPWC. Suitably roll subgrade to provide a smooth surface to a tolerance of plus or minus 0.04 ft. in accordance with Section 301-1.2 - PREPARATION OF SUBGRADE of the SSPWC.

C. Termite Controls: Apply to the area as indicated on the drawings or specified herein, in accordance with Section 02310 - EARTHWORK.

D. Soil Sterilization: Apply specified soil sterilant to areas to be paved, by method recommended by the manufacturer. Certify in writing that the material has been applied.

E. Select Base: Place the Select Base materials to thickness indicated on the drawings, in accordance with Section 301-2 - UNTREATED BASE of the SSPWC, after the subgrade preparation is completed.

F. Asphalt Paving Thickness and Courses:

1. Thickness to match existing.

2. Course; Construct a pavement in 1-2 course(s).

G. Construction:

1. General: In accordance with Section 302-5.5 - DISTRIBUTION AND SPREADING of the SSPWC thereto.

2. Prime Coat: Apply to the subgrade or aggregate base prior to placing the asphalt concrete and subbase; and to other surfaces designated by the City Engineer.

3. Tack Coat: Apply to concrete surfaces abutting new A. C. paving at least 24 hours prior to laying new work; apply to the surface of any course before the succeeding course or all cold pavement joints, curbs, gutters, manholes and the like. All the surfaces shall be free of water, foreign material or duct when the tack cold is applied.

4. Laying and Compaction: In accordance with Section 302-5.5 DISTRIBUTION AND SPREADING and Section 302.5.6 - ROLLING of the SSPWC.

    a. If the asphalt concrete base course is 6" inches or thicker, the Contractor may at its option, construct the base course in one paving operation, in accordance with the Los Angeles City Standard Plan S-610, latest edition and the SSPWC.

5. Finish asphalt concrete surfaces smooth and even, without low spots, hollow or irregularities and properly sloped for drainage.

H. Testing:

1. Upon completion, the pavement shall be true to grade and cross section. When a straight edge is laid on the finished surface, the surface shall not vary from the edge of the straightedge no more than 1/8" inches, except at the intersection or at the change of grade.

2. Flood Tests: In the presence of the Inspector or City Engineer and prior to acceptance of the work, water flood tests by water tank truck. All depressions where water ponds shall not exceed a depth of more than 1/8-inch fill.

3. Any area that is not within this tolerance shall be brought to grade by removing the paving material in the area to be repaired by an approved. Provide a minimum laying depth of 1" inches of the new pavement material at the joint line. Repairs shall not be made to the pavement surface by feather edging at the joints.

I. After the bituminous surfacing has passed the tests, including the flood test, clear and allow to dry, then apply one coat of a seal coat to the surface, in accordance with Subsection 37-4.04 of the California State Department of Transportation Standard Specifications. The seal coat shall not be applied to the newly constructed asphalt concrete surface until thirty (30) days after spreading and compacting the new asphalt concrete. After 30 days, the surface of the newly constructed asphalt concrete shall be washed with a strong detergent such as trisodium phosphate, and rinsed before the application of the seal coat.

3.3 CONCRETE YARD PAVING, CONCRETE SIDEWALK, CURB AND GUTTER

A. General: In accordance with the requirements in the SSPWC, Section 03300 – CAST-IN-PLACE CONCRETE, and Section 07920 - CAULKING AND SEALANT.

B. Locations: Where indicated on the Drawings.

C. Materials: As hereinbefore specified.

D. Preparation:

1. Concrete shall be removed and disposed off, in accordance with Section 300-1.3 - REMOVAL AND DISPOSAL OF THE MATERIALS of the SSPWC.

2. Compact existing subgrade and 4" inches thick base material, in accordance with Section 301-2 - UNTREATED BASE of the SSPWC.

3. Concrete shall be placed on the subbase to the required depth. The surface of concrete shall be floated by transverse float method and dragged on by burlap.

4. For concrete pavements, construct the longitudinal and transverse construction joints at the locations indicated on the drawings and/or conforming to the SSPWC.

   a. Longitudinal construction joints shall be constructed by plain face method as designated on the drawings and conform to the Los Angeles City Standard Plan, S-430, latest edition, and Section 302-6.5 - JOINTS of the SSPWC.

   b. Transverse expansion joints shall be installed at locations shown on the drawings and/or conforming with the SSPWC. Joint filler material shall have a minimum thickness of 2" inch to the depth equal to the thickness of the pavement and shall be composed of materials, as specified in Section 07920 - CAULKING AND SEALANT and conforming to Section 302-6.5 - JOINTS of the SSPWC.

   c. Weakened plane joints shall be formed by cutting a grove, not exceeding 3-inches, in the pavement with a power driven saw. Transverse joint shall be cut to a minimum depth of 1 1/2-inch or one-fourth of the pavement thickness, whichever is greater.

5. The pavement shall be cured by conforming to the requirements of Section 03300 - CAST-IN-PLACE CONCRETE and/or Section 201-4.1 - CONCRETE CURING MATERIALS of the SSPWC.

6. Concrete pavement shall be immediately barricaded and protected upon installation, and no vehicular traffic shall be permitted therein until the expiration of at least seven (7) days.

7. Concrete driveway shall be Case 1, 6" inches thick, and constructed as indicated on the drawings and conform to the Los Angeles City Bureau of Engineering Standard Plan S-440, latest edition.

8. Type C Integral Curb and Gutter shall be constructed indicated on the drawings and conforms to the Los Angeles City Bureau of Engineering Standard Plan S-410, latest edition.

3.4 PARKING LOT STRIPING, LETTERS, ARROWS

A. Materials: As hereinbefore specified.

B. Lines: 4" wide or as indicated on the Drawings.

C. Letters: Sizes and strokes as indicated on the Drawings. Minimum dry paint thickness shall be 15 mils.

D. Arrows: 10" stroke with proportionate head.

E. Traffic Striping: As indicated on the drawings and in conformance with Section 310-5.6.5 - TRAFFIC STRIPES AND MARKINGS of SSPWC.

F. Preparation: All surfaces to be free of dirt, grease or other foreign materials. Remove existing markings by sandblasting or other approved methods.

G. Application: Apply one heavy undiluted coat with traffic line painting equipment in locations indicated on the Drawings in uniform coverage, free from light spots and with all edges clean-cut and true. Paint by spray can shall not be allowed. Minimum dry paint thickness shall be 15 mils.

END OF SECTION

SECTION 02810
IRRIGATION SYSTEM

PART ONE - GENERAL

1.1 DESCRIPTION

A. Work Included:

1. All labor, materials, equipment, appliances, fixtures and tests necessary for removal of existing irrigation system and a new operating irrigation system as indicated on the Contract Drawings or specified in the Project Manual.

B. Related Work:

1. Documents affecting work of this Section include, but are not necessarily limited to the GENERAL CONDITIONS, SUPPLEMENTARY CONDITIONS in DIVISION 1 - GENERAL REQUIREMENTS and other Sections of the Project Manual.

2. Site Demolition in Section 02220.

3. Site Clearing and Grubbing in Section 02210.

4. Earthwork in Section 02310.

5. Landscaping 02900.

6. Water meter and electrical service in Section 01112 – DESCRIPTION OF WORK of DIVISION 1 - GENERAL REQUIREMENTS.

1.2 SUBMITTALS

A. Comply with pertinent provisions of Article 10 - GENERAL REQUIREMENTS of the Project Manual.

B. Make all submittal within 30 calendar days from the issuance of the Notice-to-Proceed.

C. Submit in seven (7) complete lists of irrigation materials and equipment, including manufacturer's name and address, specific trade names, catalog numbers complete with illustrations, manufacturer's recommendation or printed installation instructions, and/or necessary descriptive literature and clearly mark or underline proposed items.

D. **Shop Drawings**: Required for any irrigation structure as may be specified hereinafter in accordance with provisions of Article 10 - GENERAL REQUIREMENTS.

E. **Disapprovals**: Contractor is responsible to promptly resubmit**,** for approval**,** necessary data concerning a substitution for a previously disapproved item or piece of equipment that may be requested by the City Engineer.

F. **Procurement List**: Use the approved list of irrigation materials and equipment for procurement without deviation unless otherwise authorized in writing by the City Engineer.

G. Manufacturer's recommended installation procedure which, when approved by the City Engineer will become the basis for accepting or rejecting actual installation procedures used on the Work.

H. Manufacturer's specifications and other data needed to provide compliance with the specified requirements.

1.3 QUALITY ASSURANCE

A. **Workers**: Use adequate numbers of skilled workers who are thoroughly trained and experienced in the necessary crafts and who are completely familiar with the specified requirements and the methods needed for proper performance of the Work of this Section.

B. **Codes and Regulations**: All materials and workmanship in this Section shall comply with all applicable City, County and State Plumbing Ordinances, Codes and Regulations. Conform to City of Los Angeles Department of Recreation and Parks Details as shown in the Bureau of Engineering Architectural Design Manual.

C. **Permit**: Obtain and pay for all required Plumbing and Street Repair A permits. Deliver all permits and certifications of inspection to the City Engineer.

1.4 GENERAL REQUIREMENTS

A. **Approvals by the City Engineer**:

1. All approvals on required submittals hereinafter specified.

2. Approval of all resubmittals requested by the City Engineer.

B. **Inspection**: Notify the City Inspector at least 72 hours prior to time of required inspection.

C. **Existing Utilities and Plant Materials**: Protect utilities and/or plant materials not designated for removal or modification in place against damage resulting from work of this Contract. Perform any removal and/or modifications only on approval or instruction from the City Engineer or in accordance with applicable provisions noted or specified. Replace damaged existing plant material with like type and size material. Determine the cost of unreplaceable plant material according to the "square inch" method as described by the Council of Tree and Landscape Appraisers "Manual for Plant Appraisers" Handbook current edition and "Guide for Establishing Values of Trees and Other Plants".

D. **Verification of Dimensions and Quantities**: Verify site conditions, contract drawings, all dimensions and quantities prior to the bid. Furnish the quantities as may be necessary to do the specific work. Notify the City Engineer of any discrepancies between the Contract Drawings and the Project Manual and/or execution of the irrigation work prior to the bid. Do not work in areas where such discrepancies occur until further instruction by the City Engineer.

E. **Record Drawings**: Comply with provisions of Article 10 - RECORD DRAWINGS of the General Requirements. Accurately dimension location including depths of all piping, valves, and control equipment as installed. Indicate with suitable ink on one set of prints of the Contract Drawings to produce a record of complete installations; to be kept on the job and up-to-date during construction. At the completion of the work and prior to final inspection, the Contractor shall copy his record "as installed" data, using red ink, onto a set of blueline prints. The Contractor shall certify to the completeness and accuracy of the "as installed" information indicated on the blueline prints with his signature. Deliver the signed blueline prints to the City Engineer for review prior to start of the plant establishment period.

Dimension from two permanent points of reference, building corners, sidewalk, or road intersections, the location of the following items:

1. Connection to existing water lines.
2. Connection to existing electrical power.
3. Gate valves.
4. Routing of sprinkler pressure lines. Indicate dimensional location at 100' intervals max.
5. Sprinkler control valves.
6. Routing of control wiring.
7. Quick coupling valves.
8. Controller.
9. Other related equipment as directed by the Architect.
10. Sleeve locations.

F. **Modification of Contract Drawings**: In each case where proposed substitute materials or equipment will require, for proper installation, changes to the design of the project as indicated on the Contract Drawings, appropriate proposed Revision Drawings prepared by a licensed Landscape Architect or Engineer shall be furnished by the Contractor for proper installation of the proposed substitute materials or equipment and for construction by all interested trades of the proposed revisions to the project. The cost of the Drawings and of the proposed revised construction shall be borne by the Contractor. Drawings shall be submitted for the City Engineer's review within 30 days after the issuance of Notice-to-Proceed.

H. **Guarantee**: General, in accordance with provisions of Section 28 in GENERAL CONDITIONS. Guarantee the entire irrigation system against defects in materials and workmanship for a period of one year from the date of final acceptance of the Project.

1. Should any deficiencies develop within the specified guarantee period due to inferior or faulty material and workmanship, correct such deficiencies to the satisfaction of the City Engineer without added expense to the City. Further, the contractor shall be required to make any necessary repairs within 24 hours of notification. If the contractor or his agent fail to make such repairs within the

stipulated time, the City shall make such repairs or have repairs made by a third party and bill the Contractor for all expenses that accrue from making such repairs.

2. The City reserves the right to make temporary repairs as necessary to keep the irrigation system equipment in operating condition. The exercise of this right by the City will not relieve the Contractor of his responsibilities under the terms of the guarantee.

3. Repair any settlement of backfilled trenches which may occur during a one-year period after final acceptance by the City Engineer, to the City Engineer's satisfaction, without expense to the City, including the complete restoration of all damaged planting, paving, or other improvements of any kind.

1.5 DELIVERY, STORAGE AND HANDLING

A. **Delivery**: Deliver products to the job-site in their manufacturer's original containers, with labels intact and legible.

B. **Storage**: Store piping, materials, fitting, etc. at the job-site where directed by the City Engineer until such time for installation.

C. **Handling**: Promptly remove damaged materials and unsuitable items from the job-site and promptly replace with materials meeting the specified requirements, at no added cost to the City.

PART TWO - PRODUCTS

2.1 MATERIALS

A. **General**: Provide recently manufactured materials of the best grade of each respective kind.

B. **Pipe and Fittings**: The type of pipe material and fittings designated on the Contract Drawings, or as hereinafter specified.

1. Steel Pipe: Galvanized standard weight Schedule 40 steel water pipe complying with ASTM A53 - SPECIFICATION FOR PIPE, STEEL, BLACK AND HOT-DIPPED, ZINC-COATED, WELDED AND SEAMLESS; jointed with galvanized, threaded, standard weight malleable iron fittings, and/or couplings. (Kaiser, U.S. Steel, Kelly Pipe, or equal.)

2. Plastic Pipe: High impact rigid polyvinyl chloride PVC 1220 (Type I, Grade 2), conforming to ASTM D1785 - SPECIFICATION FOR POLY (VINYL CHLORIDE) (PVC) PLASTIC PIPE, SCHEDULES 40, 80 120, AND 200, the minimum pressure rating to be not less than the working pressures indicated therein for the schedule and size listed. (PVC pipe marked with product standard PS-21-70 conforms to the ASTM requirements.)

3. All Pipes: To be homogeneous throughout and free from cracks, holes, foreign materials, blisters, deleterious wrinkles, and dents.

4. Use Schedule 40 PVC plastic pipe for pipe sizes up to and including 2 1/2 inch for installation on the supply and discharge sides of control valves unless otherwise indicated.

5. Use Class 200 PVC with ductile iron fittings and restraints as required shall be used for continuously pressurized pipe sizes of 3 inch up to and including 6 inch diameter.

6. Use Schedule 80 PVC plastic pipe only, when threaded joints are specified, or otherwise permitted by the City Engineer.

7. Continuously and permanently mark all pipes with the following: Manufacturer's name or trademark, size, schedule, and type of pipe, working pressure at 73 degrees F. and National Sanitation Foundation (N.S.F.) approval.

8. Fittings and Couplings for Plastic Pipe: Threaded or slip-fitting tapered socket solvent weld type. Provide threaded adapters with socket pipe for connections to threaded pipe. Plastic pipe fittings and couplings shall be PVC I or PVC I/II material supplied in the same schedule size specified for the pipe. Indicate the type of plastic material and schedule size on each fitting or coupling. Fittings and couplings shall comply with the following specifications (Lasco Pipe, or equal.).

Socket Fittings	Threaded Fittings
Schedule 40 ASTM D-2466 - SPECIFICATION FOR POLY (VINYL CHLORIDE) (PVC) PLASTIC PIPE FITTINGS, SCHEDULE 40	Schedule 80 ASTM D-2464 - SPECIFICATION FOR THREADED POLY (CHLORIDE)(PVC)PLASTIC PIPE FITTINGS,
Schedule 80 ASTM D-2467 - SPECIFICATION FOR POLY (VINYL CHLORIDE) (PVC) PLASTIC PIPE FITTINGS, SCHEDULE 80; ASTM D-1785 - SPECIFICATION FOR POLY (VINYL CHLORIDE) (PVC) PLASTIC PIPE, SCHEDULES 40, 80 AND 120	Schedule 80

9. All Other Metal Pipe and Fitting: All metal pipings, pipe fittings and nipples consisting brass, copper, bronze, etc. shall comply with appropriate ASTM testing standards including mercurous nitrate test. Ductile iron fittings for restrained plastic pipe shall be manufactured of ductile iron, Grade 65-45-12 in accordance with ASTM A536. Fittings shall have deep bell push-on joints with gaskets meeting ASTM F477. Gasket lubricant for push on fittings shall be non-toxic, odorless, tasteless and shall not support bacteria. Use 'Seal Lube", SK#87710 by IPS Weldon Corp. or equal. Valve to pipe restraint shall consist of ductile iron (ASTM A536) grip rings with machined serrations and ductile iron restraint rods. The ring that grips the pipe shall meet the requirements of UNI-B-13-94. The restraint rods nuts shall be made from low alloy steel to AWWA/ANSI C111/A21.11 or ductile iron to ASTM A536. Fitting to pipe restraint shall the full

rating of the pipe on which it is used. Grip rings and restraint structures shall be made of ductile iron to ASTM A536. Grip ring serrations shall be fully machined or cast. Clamp bolts and nuts shall meet or exceed ASTM A307. Pipe to pipe restraint shall the full rating of the pipe on which it is used.

C. **Valves and Valve Boxes**:

1. General: Provide valves of the type and capacity designated on the Contract Drawings and with the requirements specified herein. All valves shall be capable of satisfactory performance at a working pressure of 200 psi. Valve design shall permit disassembly for replacement of seals without removal of the valve body from the pipeline.

2. Shut-Off Valves: In sizes 2-inch and smaller shall be full port ball valves complying with Federal Specification WW-V-35a, have teflon seats and seals, be corrosion-resistant with two-piece body of cast red bronze. The stem shall be silicon bronze with reinforced teflon thrust washer with blow-out proof design and adjustable packing of teflon - impregnated asbestos. (Nibco, or equal.) Sizes 2-1/2 inches and larger shall be iron body brass trimmed with other features as per 2-inch size.

3. Manual Control Valves: Brass, straight or angle pattern globe valves, full opening, key operated with replaceable compression disc, and ground joint union on the discharge end. (Buckner, or equal.)

4. Automatic Control Valves: Electrically operated, of brass with accurately machined valve seat surface, equipped with flow control adjustment, with capability for manual operation and readily disassembled for servicing; slow opening and closing and self-cleaning. Plastic body valves may be used at the request of the Department of Recreation and Parks (Rainbird "G Series" or equal)

5. Quick-Coupling Valves and Assemblies: Two (2) piece brass self-closing valves with built-in flow control and supplied in 1-inch, unless otherwise required. Quick-coupler assembly shall include the valve, quick-coupler connection, and hose swivel. (Rainbird #44LRC or equal.)

6. Valve Boxes and Covers: Pre-cast Portland cement concrete (unless otherwise indicated) minimum 9 2 inches x 16 inches x 12 inches or sized as required for easy access and field servicing of the valve. Valve boxes shall have cast-iron self-locking covers, permanently embossed with 2-inch-high initial identify valve box contents:

Shut-Off Valve	SOV
Remote Control Valve	RCV
Quick Coupler Valve	QC
Manual Control Valve	MCV
Electrical Pull Box	ELEC

7. Wye-Strainer: Bronze construction fitted with a 20 mesh screen of monel or stainless steel. For sizes over 1" a blow-off cock is required.

D. **Sprinkler Equipment**:

1. Sprinkler, Bubbler Heads, and Spray Nozzles: Types and sizes shown on the Contract Drawings.

2. Provide equipment of one type and flow characteristic from the same manufacturer and bearing the manufacturer's name and identification code in a position where they can be identified in the installed position.

3. Provide fixed head sprinklers with a one-piece housing and with provisions for interior parts replacement. Pop-up sprinklers to rise at least 4-inch during operation. Make full or part circle sprinklers interchangeable in the same housing.

4. Spray Head: Adjustable type from full flow to shut-off.

5. Bubbler Head to be pressure compensating type.

E. **Conductors**:

1. Supply line voltage conductors with THW, 600-volt insulation rating, conforming to the applicable provisions of ASTM D-2219 and 2220.

2. Low voltage control conductors shall be U.L. approved direct burial Type U.F., No. 14 AWG solid copper, unless otherwise required, in accordance with the control equipment manufacturer's recommendation. (Hatfield, Anixter, Cablex, or equal.)

3. Two wire systems shall used low voltage control conductors in accordance with the recommendations of the controller manufacturer.

F. All rigid electrical conduit shall be one (1) inch, Schedule 40, galvanized steel, threaded and bushed with packing placed in the ends to protect the wiring. Sweep ends of conduit into pull boxes to make splices.

G. **Wire Connectors**: Conductors shall be joined by the use of an approved waterproof connector and sealer capable of satisfactory operation under continuous submersion in water. (3-M brand of DBY or DBR Direct Burial Splice Kits, or equal.)

H. **Concrete Thrust Blocks and Anchoring Rods**: Provide concrete thrust blocks and anchoring rod where applicable for plastic pipes with 3-inch diameter or larger, and all backflow preventer assembly. The portland cement concrete used for concrete thrust blocks shall be 470-B-2000 concrete, and the anchoring rod shall be galvanized steel with a minimum of 2@ diameter (wrapped around the pipe).

I. Crushed Rock Sump: Install one (1) inch crushed rock sump, 12" deep in all control or pressure regulator valve boxes and electrical pull boxes. Crush rock shall conform with Section 200-1.2-CRUSHED ROCK AND ROCK DUST of the Standard Specifications for Public Works Construction.

J. **Accessories:** Provide two each special head wrenches for installing, removing and adjusting each type and make of sprinkler equipment. Provide two keys each for quick coupler valve, and controller units.

PART THREE - EXECUTION

3.1 SURFACE CONDITIONS

Examine the areas and conditions under which work of this Section will be performed. Correct conditions detrimental to timely and proper completion of the work. Do not proceed until detrimental conditions are corrected.

3.2 IRRIGATION SYSTEM INSTALLATION:

A. **General**:

1. Perform all work on the irrigation system, including hydrostatic and coverage tests, preliminary operational test of the automatic control system, and the backfill and compaction of trenches and other excavations after topsoil work and before planting.

2. Specimen plants (24-inch or larger size box) will be planted before installing the irrigation system; reroute irrigation lines conflicting with specimen plant locations to clear the root ball, if possible by twenty-four (24) inches.

3. With the City Engineer's direction, make adjustments where necessary to conform to actual field conditions unless otherwise noted. Irrigation system layouts shown on the Contract Drawings shall be considered schematic.

4. Make the irrigation system operational with uniform and adequate coverage of the areas to be irrigated, prior to planting.

5. All piping on the Contract Drawings shown in paved areas but running parallel and adjacent to planted areas, are intended for design clarification only and are to be installed in the planted area whenever possible.

6. Connect all piping serving the adjacent to the new irrigation system. Verify with the City Engineer prior to the start of the work.

7. Make water and utility connections as shown on the Contract Drawings or as designated by the utility company. Replace all sidewalks, curbs or paving removed by the installation of the water and electrical meters and service to the satisfaction of the City Engineer.

B. **Trench Excavating and Backfilling**: Size trenches and other excavations to accommodate the irrigation system components, conduits, pipe bedding material and other required facilities. Provide additional space to assure proper installation and access for inspections. Minimum 8 inches side clearance on each side of the pipe or conduit shall be provided in all trenches unless otherwise specified.

1. Unless otherwise specified, the minimum depth of cover over pipelines and conduits shall be as follows:

   a. Electrical conduit - 30-inches (36-inches under roadways and parking lots).

   b. Other Control Wiring - Depth of waterline or sprinkler line, or a minimum

of 24-inches cover if without any waterline or sprinkler line.

c. Waterlines continuously pressurized - 24-inches for mainlines 3" and smaller; 30- inches for mainlines 4" and larger.

d. Lateral sprinkler lines - 12-inches.

2. Make the bottom of trenches true to grade and free of protruding stones, roots, or other matter which would prevent proper bedding of pipe or other facilities.

3. Backfill trenches so that the specified thickness of topsoil is restored to the upper part of the trench and compacted to 90% relative compaction.

4. Backfill in the planting area shall be flooded in accordance with Subsection 306-1.3.3 – JETTED BACKFILL of the Standard Specifications of Public Works Construction.

5. Compact trench backfill through paved areas with each layer, not to exceed the thickness specified in SSPWC Section 306-1-3.2, to 95 percent relative compaction up to designated grade elevations to receive yard or concrete paving and base material.

6. Resurface trenches through paved areas to match existing pavement.

7. No irrigation trenching shall pass closer than eight feet of the base of any tree. No tree root larger than 2" diameter shall be cut without approval of the Project Manager.

C. **Irrigation Pipeline Installation - General**: Execute trench excavating and backfilling, including the depth of cover over the pipeline, in accordance with requirements of Subsection 3.2(B) and SSPWC Section 306-1.2.13, whichever is more stringent.

1. Install pipe fittings in accordance with the manufacturer's recommendations or printed installation instructions before pipe installation. In all pipe trenches, provide minimum 8-inches side clearances.

2. Bed pipe in at least 4-inches of finely divided material or cleaned sand to provide a firm, uniform bearing. Surround the pipe with additional finely divided material or clean sand to at least 12-inches over the top of the pipe. Backfill balance of trench with clean earth material and applicable base material.

3. Deposit trench backfill sufficient to anchor the pipe before the pipeline pressure testing, except that joints shall remain exposed until satisfactory completion of testing.

4. When two or more pipelines are installed in the same trench, separate the pipelines by a minimum horizontal clear distance of 12-inches and a minimum vertical clear distance of 3-inches. Install them so that each pipeline, valve, or other pipeline component may be serviced or replaced without disturbing the other.

5. Assemble all assemblies as specified and in accordance with the manufacturer's directions.

6. During installation of pipe, fittings, valves, and other pipeline components, prevent foreign matter from entering the system. Temporarily cap or plug all open ends at cessation of installation operations.

7. Accomplish changes in pipelines size with reducer fittings. No close nipples or bushings shall be used.

8. Place all lines under roadway or driveway in Schedule 80 PVC sleeves. Oversize the sleeves sufficiently to house the pipe, fittings and the directed burial control wires, unless otherwise indicated.

9. Dissimilar metals shall be separated by an approved "Dielectric" coupling.

D. **Steel Pipe**:

1. Square cut and ream pipe ends to full size with a long taper reamer.

2. Cut threads with clean sharp dies.
3. Make joints with a non-toxic, non-hardening joint compound applied to the male threads only.

4. Wrap steel pipe embedded in the ground with seamless 10 mil F.D.S. Safe-T-clad tape.

   a. Spiral wrap pipe with uniform laps. Apply the second layer of wrap in the reverse direction of the first layer of wrap.

5. Joints and any remaining unwrapped portion of the pipeline shall be similarly wrapped after pressure testing.

E. **Plastic Pipeline**:

1. Join plastic pipe with socket type solvent welded fittings, threaded fittings, rubber ring fittings or by other means specified. Install steel pipe first when plastic pipe is joined to steel pipe.

2. Cut square, externally chamfer approximately 10-15 degrees and remove all burrs and fins.

3. Make solvent welded joints in accordance with ASTM D2855 - PRACTICE FOR MAKING - SOLVENT - CEMENTED JOINTS WITH POLY (VINYL CHLORIDE) (PVC) PIPE AND FITTINGS. Use the solvent recommended by the pipe manufacturer.

4. Install plastic pipe in accordance with ASTM D2774 - PRACTICE FOR UNDERGROUND INSTALLATION OF THERMOPLASTIC PRESSURE PIPING and the requirements herein.

5. Exercise care in assembling a pipeline with solvent welded joints so that stress on previously made joints is avoided. Handling of the pipe following jointing, such as lowering the assembled pipeline into the trench, shall not occur prior to the set times specified by the manufacturer.

6. Apply solvent to pipe ends in such a manner that no material is deposited on the

interior surface of the pipe or extruded into the interior of the pipe during jointing. Wipe off excess cement on the exterior of the joint immediately after assembly.

7. Threads for plastic pipe shall be as specified in Subsection 2.1(B)7 above. Install a plug in the bore of the pipe to prevent distortion prior to the threading.

8. Make threaded pipe joints using Teflon tape or other approved jointing material. Do not use solvent with threaded joints.

9. Protect pipe from tool damage during assembly. Use vises with padded jaws and strap wrenches for installation of fittings and nipples.

10. Remove and replace plastic pipe which has been nicked, scarred, or otherwise damaged.

11. Snake plastic pipe from side to side in the trench to allow 1-foot of expansion and contraction per 100 feet of straight run.

12. Do not expose the pipeline to water for 24 hours after the last solvent welded joint is made.

F. **Installation of Valves, Valve Boxes, and Special Equipment**:

1. General: Install all valves and other equipment in strict accordance with the details in a normal upright position, unless otherwise recommended by the manufacturer, and make readily accessible for operation, maintenance and replacement.

2. Install valves of the same size as the pipeline in which they are installed, unless otherwise indicated.

3. Install shut-off valves and sectional control valves below ground; house in a covered valve box that will permit access for field servicing.

4. Install quick-coupler valves and hose bibbs projecting above grade 1-foot from curbs, pavement and walks when possible. In lawn areas, such equipment shall be installed in a covered valve box with lockable cover set to finish grade. In ground cover and shrubbery areas, install quick-coupler valves as detailed on the Contract Drawings.

5. Set valve boxes and valve markers to finish grade on a minimum 12-inch deep layer of 1-inch size crushed rock and set valves at sufficient depth to provide clearance between the cover and valve handle or key when the valve is in the fully open position. Place crushed rock below valve. Do not cover valve with pea gravel.

6. No equipment shall be installed closer than 12 inches to any paved surface, unless separated from the paved surface by a wall, fence, curb, or similar barrier, or installed underground.

G. **Irrigation Head Installation and Adjustment**:

1. General: In accordance with the requirements of Subsection 3.2 of this Section, flush and pressure test all mains and laterals, including risers before installing

irrigation heads, after which perform a water coverage test.

2. Location, Elevation and Spacing:

   a. Do not exceed the maximum irrigation head spacing shown on the Contract Drawings.

   b. In new lawn areas, install sprinkler heads 3-inches above finish grade. Before the first mowing, adjust all lawn heads to flush with the final finish grade.

   c. Install lawn sprinklers 2-inches clear of adjacent walks, curbs, paving, headers, and similar improvements.

   d. Install field shrub sprinkler heads, bubbler heads, and oscillating sprinklers 6-inches above finish grade unless otherwise indicated.

   e. Shrub irrigation heads adjacent to curbs, walks, paving, and similar improvements shall be installed on pop-up sprinkler bodies set flush to finished grade.

3. Riser Installation:

   a. Install risers perpendicular to finished grade to obtain optimum coverage of the area.

   b. All fixed risers shall be of galvanized steel; all swing joint risers shall be of either Sch. 80 PVC, unless otherwise indicated.

   c. Provide threaded pipe between the connection to the lateral or main and the sprinkler head.

   d. Support risers for oscillating sprinkler heads installed above finish grade within 24-inches of curbs, walks, roadways and similar improvements with a 3/4-inch diameter x 30-inches galvanized steel pipe stake driven into the ground and secured with two stainless steel clamps. Extend the upper end of the stake below the bottom of the head and a minimum of 6-inches above the finish grade. Extend the length of stake 24-inches below the lateral supply line.

   e. All riser assemblies shall be double swing joint type.

4. Irrigation Head Adjustment:

   a. When all irrigation heads are installed and the irrigation system is operating, adjust and balance each section or unit with all section control valves fully open to obtain uniform 100% head to head coverage.

   b. Adjust irrigation heads having adjustable pin nozzles, screws or orifices to provide adequate distribution of water over the coverage pattern. Without additional cost to the City, substitute larger or smaller nozzle cores in sprinkler heads and/or add or omit sprinkler heads as necessary to obtain water coverage which will support healthy plant growth. Any

required modification shall not alter the total GPM to a degree to require a major revision of pipe sizing.

c. At no time is the irrigation system to spray water on roadways or cause any erosion to the site.

d. Low Head Drainage: The Contractor shall install in-line drainage valves at irrigation heads or where necessary to prevent low head drainage.

H. **Automatic Control System Installation**:

1. General: Install a complete automatic irrigation control system, including the automatic controller, automatic control valves and wiring, and all necessary accessories and utility service connections.

2. Install the automatic controller outside of the coverage pattern of the irrigation system at the location designated on the Contract Drawings. Verify location with City Engineer prior to installation.

3. Install a separate disconnect switch between the source of power and the controller and a single receptacle outlet (ground fault Interrupter type) as specified herein before. Provide fuse control components in the controller and ground the chassis.

4. Install all service wiring at the minimum depth specified in Subsection 3.2(B) of this Section in Schedule 40 galvanized steel electrical conduit from the service point to the controller. The minimum service wire shall be No. 12 AWG copper 600 volt, Type THW or THWN or larger, as required by the Contract or controller manufacturer. Locate splices only in specified pull boxes and make splices with a waterproof packaged kit approved for underground use. Set pull boxes to finish grade on a 12-inch deep layer of one (1) inch crushed rock.

5. House control wiring in conduit between the controller and an electrical pull box at the base of the controller. House control wire under all yard or concrete paved areas in Schedule 80 PVC waterline pipe sleeve. All other wiring issuing from the electrical pull box shall be direct burial and installed in the main or lateral waterline trenches wherever practical.

   The contractor shall run two extra black control wires from the automatic controller to the farthest valve on the system, or to the farthest valve at each end of the controller area, if the farthest area extends in two direction from the controller. Addition all, run one extra black control wire to each valve manifold. Leave sufficient slack in the wiring to provide for expansion and contraction. When the control wiring cannot be installed in a pipe trench, install control wiring a minimum of 18-inches below finish grade and install a bright colored permanent identification band with suitable markings in all pull boxes and near termination of each conductor, in the trench 6-inches below finish grade directly over the wire.

6. Color code all common wire white with all control wire color coded except white. Each valve station wire shall be color coded as follows: red - station 1; yellow - station 2; blue - station 3; green - station 4 orange - station 5; tan - station 6; purple - station 7; pink - station 8; brown - station 9; gray - station 10; repeat for addition station. Make splices in control wire in accordance with the requirements

for service wire. Leave at least 2-feet of coiled slack at each splice and point of connection inside of valve boxes.

7. Testing Electrical Components: Field tests shall be performed by the Contractor on all irrigation system conductors in accordance with the requirements specified herein prior to performing the functional tests. Where conductors are installed by trenching and backfilling, such tests shall be performed after at least six (6) inches of backfill material has been placed over the conductors and backfill material has been compacted. Refer to trenching details on the drawings.

   Prior to the start of the functional testing, the Contractor shall perform the following tests on all irrigation system electrical conductors in the presence of the Owner's representative.

   Each circuit shall be tested for continuity and open circuits.

   Each circuit shall be tested for grounds.

   An insulation resistance test at 500-volts DC shall be made on each circuit between the circuit and the ground. The insulation resistance shall not be less than 10-megohms on all circuits.

   The functional test for all the electric automatic irrigation system(s) shall consists of a minimum of fifteen (15) working days of operation during which time the controller shall complete at least three (3) complete cycles automatically for each station. The lengths and frequencies of the cycles will be determined by the City's representative. If unsatisfactory performance of the system develops, the condition shall be corrected and the test repeated until fifteen (15) working days of continuous, satisfactory operation is obtained.

   The functional test shall be satisfactorily completed prior to the start of the plant establishment period.

   Repair to the irrigation system shall be made within five (5) working days of a malfunction or damage to any portion of the system.

8. Leave the control system in operating condition with an operational chart mounted within the controller cabinet upon completion of the work.

3.3 FLUSHING AND TESTING

A. **Flushing**: After completion, and prior to the installation of any terminal fittings, thoroughly flush the entire pipeline system to remove dirt, scale, or other material. After flushing, conduct the following tests in the sequence listed below. Provide all equipment, materials, and labor necessary to perform the tests. Conduct all tests in the presence of the City Inspector.

   1. Pipeline Pressure Test: Perform a water pressure test on all pressure mains and laterals before any couplings, fittings, valves, and the likes are concealed. Cap all open ends after the water is turned into the line in such a manner that all air will be expelled. Test pressure mains with all control valves to lateral lines closed. After the pressure main test, open all valves to test lateral lines. The constant test pressure and the duration of the test are as follows:

a. Mains: 24 hours at 125 psi.
b. Laterals: 2 hours at 100 psi.

2. Sprinkler Coverage Test: Perform the coverage test after sprinkler heads have been installed and demonstrated that each section or unit in the irrigation system is balanced to provide uniform and adequate coverage of the areas serviced. Correct deficiencies in the system in accordance with the requirements of Subsection 3.2(G)4.

3. Operational Test: Evaluate the performance of all components of the automatic control system for manual and automatic operation. During the maintenance period, and at least 15 days prior to final inspection, set the controller on automatic operation so that the system will operate satisfactorily during such period. Make all necessary repairs, replacements, and adjustments until all equipment, electrical work, controls, and instrumentation are functioning in accordance with the Contract Documents.

3.4 OPERATING MANUALS AND EQUIPMENT

A. Furnish the City with four bound copies of operating and maintenance manuals for all irrigation system equipment such as automatic controller.

B. Explain in detail all irrigation equipment operations, watering schedule and maintenance procedures to the City personnel directed by the Inspector and City Engineer before completion of the project.

C. Provide the City with a reduced legible copy of the "As-Installed" Irrigation Plan hermetically sealed in a plastic cover to be affixed inside the controller cover.

END OF SECTION

THIS PAGE INTENTIONALLY LEFT BLANK

SECTION 02820
SLIDING GATES AND OPERATORS

PART 1 - GENERAL

1.1 SUMMARY

A. Section includes:

1. Sliding gate assembly consisting of, but not limited to, the following:
   a. Steel gates.
   b. Operating hardware.
   c. Electric operator.
   d. Control system.
   e. Embedded loops and vehicle detectors.
   f. Supplementary parts and components, such as clips, fasteners, supplementary framing, and other miscellaneous accessories required for a complete installation.

B. Related work:

1. Division 5 for metal fabrications.

2. Division 7 for sealants.

3. Division 9 for finish painting gate assembly.

4. Division 16 for electrical power to electric operator control box, and conduit from electric operator to control unit.

1.2 REFERENCES

A. Vehicle gate operators shall be manufactured to UL requirements and shall be listed as an approved product by the UL testing laboratory. All vehicle gate operators shall be furnished with UL labels.

1.3 SUBMITTAL

A. Procedure: In accordance with Division One.

B. Product Data:

1. Provide manufacturer's catalog cuts with printed specifications and installation instructions.

2. Furnish detailed sequence of operation (description of system).

3. Provide 4 copies of operation and maintenance data covering the installed products, to the City Engineer. Including name, address and telephone number of the nearest fully equipped service center.

C. Shop Drawings:

1. Supply shop drawings showing the relationship of operating systems with other work. Include details of all major components. Include parts list showing manufacturer's names and part numbers for the complete installation.

2. Include complete details of gate construction, gate height, post spacing dimensions and unit weights of structural components.

1.4 QUALITY ASSURANCE

A. Manufacturer's supervision: Manufacturer authorized representative must supervise installation of the gates and submit a written report at completion of installation stating that installations were made in compliance with the equipment manufacturer's instructions.

B. Installer's qualifications: Firm approved by the equipment manufacturer and who has completed at least 5 installations similar in material, design, and extent to that indicated for Project which have resulted in installations with a record of successful in-service performance, for the 3 years preceding proposed installation on the Project.

C. Regulatory requirements: Electronic and electrical components of gate assembly must be UL listed and labeled.

PART 2 - PRODUCTS

2.1 MANUFACTURER

A. Fortress Cantilever Slide Gate System as manufactured by Tymetal Corp., (800) 328-4283 or equal.

B. Manufacturer shall submit test results stating that the gate panel and operator have been tested as a system for 200,000 cycles.

2.2 SYSTEM DIMENSIONS

A. Gate opening dimensions shown on the Drawings.

2.3 SYSTEM FUNCTION

A. General Description:

1. System shall be designed to operate cantilever sliding gates. See Drawings for gate panel filler.

B. Operation:

1. System shall be designed so that gate movement from the closed position is impossible except by electric or mechanical means.

C. Variable Speed-Rate of Travel:

1. The 225 VS gate operator shall have the ability to achieve a maximum gate speed of 2.2 feet per second, and shall be equipped with soft-start and soft-stop function to prevent shock load to the gate panel and operator.

2.4 MOTOR

A. Motor Size: The electrical motor shall be 1 HP with the voltage and characteristics shown on the Drawings.

B. AC Drive: The variable frequency drive unit shall allow for programmable speeds and programmable soft-start and soft-stop features.

C. Overload Protection: Motors shall be protected against overload by either a thermal or a current sensing over load device.

D. Gear (Box) Reducer:

1. The self-enclosed gear-head gearbox shall be manufactured as a single unit, and shall consist of a hardened steel, machine cut worm and mating bronze gear running in oil bath. Oil shall be a #634 specialty oil with a fluid pour point of -44 degrees F. The gearbox shall perform the following functions:

a. Adjustable Clutching Device.

b. Manual disconnect by crank handle.

E. Gear Box Heater: A 110 VAC electrical service shall provide power to the thermostat controlling the internal gearbox heater.

F. Drive – Chain: A #50 roller chain shall be utilized. All chain brackets and required attachment hardware shall be supplied.

G. Manual Operation:

1. A crank handle, located in the motor box at ground level, shall provide a two-step emergency procedure for manual operation:

a. Unlock and open motor-box door.

b. Fold out handle and crank gate opened or closed.

H. Limits: The operator shall be equipped with an integral limit system, providing accurate settings to control the open and close positions of the gate, and shall not be affected by manual operation or motor removal.

I. Control Circuit: U.L. listed operator to include 24 VAC controls.

J. Control wiring: The electrical contractor shall supply all exterior control wiring.

K. Audio Alarm:

1. This alarm shall have a dual function.

a. The first function shall be as a warning prior to gate movement. When the motor control board recognizes a command, this alarm shall be activated 3 seconds before the motor is energized and the gate begins to move. This shall be continuously activated while the gate is in motion.

b. The second function shall be as an entrapment notification alarm (for UL Class III). This alarm shall sound as a result of a second activation of the external primary entrapment prevention device before an end limit (open or close) is reached. The pulsing rate of the alarm in the entrapment notification mode shall be faster than the pulsing rate when in the warning mode prior to gate movement.

L. Main Power Disconnect Switch and Wiring Compartment: When this switch is in the OFF position, the main power shall be disconnected from the Variable Speed Drive, Motor Control Board and power transformers.

M. Speed: The gate operator speed shall be fully programmable from minimum/maximum of 1 foot to 2.2 feet per second.

N. Transformer: Operators shall have a 75 VAC transformer to provide Class II power.

O. Auto Close Timer: Adjustable from 2 to 60 seconds, the timer provides an automatic closure of the gate from the full open position.

2.5 MOTOR HOUSING

A. Water Resistant Motor Box: Shall be constructed of 10-gauge sheet steel, hot-dip galvanized per ASTM 123, gasketed and located at ground level for easy maintenance.

B. Security Hinges and Tamper Resistant Security Screws: Shall be furnished to secure operator enclosure components.

C. Motor Box Lock: Motor box shall be locked with a prison dead bolt. Provide 3 paracentric keys per key code.

2.6 STRUCTURAL SLIDING GATE PANEL

A. Gate Frame: The gate frame shall be fabricated from 6063-T6 aluminum alloy extrusions. The top member is a 3" x 5" aluminum structural channel/tube weighing not less than 3.0 lb/lf. This is also referred to as a "large primary". This member shall be "keyed" to interlock with the "keyed" track member. If fabricated as a single horizontal piece, the bottom member shall be a 2" x 5" aluminum structural tube weighing not less than 2.0 lb/lf. If fabricated in two horizontal pieces, the bottom member shall be a 5" aluminum structural channel weighing not less than 2.65 lb/lf. The two horizontal pieces or sections shall be spliced in the field. The vertical members at the ends of the opening portion of the frame shall be "P" shaped in cross sections with a normal base dimension of no less than 2" x 2" and weighing not less than 1.6 lb/lf. The intermediate vertical members shall alternate between 2" x 2" and 1" x 2" in cross section weighing not less than 1.1 lb/lf and

0.82 lb/lf respectively. The spacing for the vertical intermediates shall be less than 50 percent of the gate frame height.

B. Fabrication: The gate frame shall be fabricated in one or multiple sections depending on size requirements or constraints.

C. Gate Track: The gate shall have 2 separate semi-enclosed "keyed" tracks, extruded from 6105-T5 aluminum alloy weighing not less than 2.9 lb/lf. Track members to be located on each side of the top member. When interlocked and welded to the "keyed" top member, it forms a composite structure with the top of the gate frame. Welds to be placed alternately alone the top and side of the track at 9" centers with welds being a minimum of 2".

D. Gate Trucks: The gate frame is to be supported from the tracks by four, swivel-type, self-aligning, 4-wheeled, sealed lubricant ball-bearing truck assemblies. These are to be attached to double 4" O.D. support posts, the bottom of which shall be equipped with two pairs of 3" rubber guide wheels.

E. Diagonal Bracing: Diagonal "X" bracing of 3/16" minimum diameter stainless steel aircraft cable shall be installed to brace the gate panels and to provide a ready means of vertical adjustment.

F. Posts: Double set of support posts shall be 4" OD galvanized steel with concrete footings as specified by the gate Contractor.

G. Gate Filler: Louvered, the gates will have angle installed as louvers as detailed on the drawings.

H. Gate Finish: Gate to be mill finish aluminum.

I. Gate Lock: Gate system shall be furnished with an electro-mechanical lock. Lock shall be supplied with status indication and with a five tumbler mechanical lock. All gates shall be keyed alike. Lock to be supplied by gate manufacturer.

2.7 CONTROLS

A. UL Class III installations (Non-Supervised– Automatic Gate system):

1. For Class III installations, an external primary entrapment protection system must be installed for both close and open gate directions. When this equipment is installed, momentary contact on the pushbutton control will start or stop gate movement. The built-in auto-close timer may be used to automatically close the gate from a full-open position after a user-defined interval (from 2-60 seconds).

B. Two Albano IR-55 Photo-beams are provided with the operator as devices to provide primary entrapment protection under the UL 325 guidelines. The inclusion of these photo-beams does not alleviate the contractor from the responsibility of identifying and providing protection from safety hazards under UL 325 standards for Class III operation. The secondary entrapment protection device shall be the inherent audio alarm.

C. It will be up to the installing contractor to ensure that the external primary entrapment safety devices (contact / non-contact or some combination of) be installed for the specific site conditions.

PART 3 - EXECUTION

3.1 INSPECTION

A. Final Grades and Installation Conditions:

1. Final grades and installation conditions shall be examined. Work shall not begin until all unsatisfactory conditions are corrected.

3.2 INSTALLATION

A. Equipment: Equipment in this section shall be installed in strict accordance with the manufacturer's printed instructions unless otherwise shown on the Drawings.

3.3 SYSTEMS TEST

A. Adjustment: The complete system shall be adjusted to assure it is performing properly.

B. Preliminary Test: The system shall be operated for a period of time long enough to determine that the system is in suitable condition.

END OF SECTION

SECTION 02839
PREFABRICATED HALF THROUGH TRUSS PEDESTRIAN BRIDGE

1.0 GENERAL

1.1 Scope:

Design and fabrication for half through truss (no overhead bracing) bridge of steel construction as indicated on the Drawings. The bridge will be designed and will not be a design-bid item requiring permitting later. The work included under this section shall consist of design, fabrication, and coating of the steel truss bridge superstructure including bearings.

1.1.1 Reference Standards:

- American Association of State Highway and Transportation Officials (AASHTO):
  - Bridge Design Specifications.
  - Specifications for Structural Supports for Highway Signs, Luminaires, and Traffic Signals.
- American Institute of Steel Construction (AISC):
  - AISC Steel Construction Manual.
  - 360 Specification for Structural Steel Buildings.
- American Society of Civil Engineers (ASCE):
  - 7 Minimum Design Loads for Buildings and Other Structures.
- ASTM International (ASTM):
  - A307 - Standard Specification for Carbon Steel Bolts and Studs, 60,000 psi Tensile Strength
  - A563 - Standard Specification for Carbon and Alloy Steel Nuts
  - D4894 - Standard Specification for Polytetrafluoroethylene (PTFE) Granular Molding and Ram Extrusion Materials.
  - D4895 - Standard Specification for Polytetrafluoroethylene (PTFE) Resin Produced from Dispersion.
  - F3125 - Standard Specification for High Strength Structural Bolts, Steel and Alloy Steel, Heat Treated, 120 ksi (830 MPa) and 150 ksi (1040 MPa) Minimum Tensile Strength.
- American Welding Society (AWS):
  - D1.1 - Structural Welding Code - Steel.

1.2 Qualifications:

Qualified Bridge Manufacturers shall have at least 10 years of experience fabricating pedestrian bridges of similar size, length, capacity, and complexity and shall have an up to date quality certification by AISC. All suppliers shall fabricate their product utilizing a modern fabrication facility owned and operated by the Bridge Manufacturer.

Manufacturers or equal:

Contech Engineered Solutions LLC.

The Bridge Manufacturer shall have as a direct employee, an Engineer who is experienced in bridge design to be in responsible charge of all engineering related task and design. The Engineer shall have a minimum of 10 years of experience in bridge

design and be a currently licensed civil or structural Professional Engineer in the State of California.

1.3 Submittals:

Shop Drawings: Submittal drawings shall be unique complete fabrication and erection drawings. All relative design information such as member size, ASTM/AASHTO material specification, anchor bolt layout, dimensions necessary to fabricate and required welding shall be clearly shown on the drawings. Drawings shall have referenced details and sheet numbers. All drawings shall be stamped, signed and dated by the Bridge Manufacturer's Design Professional.

Calculations: Structural calculations for the design of the bridge superstructure shall be prepared by the Bridge Manufacturer. Calculations shall include complete design, analysis and code checks for the controlling members, connectivity and support conditions, truss stability checks, deck design, deflection checks, reactions to the supporting foundations, bearings, and all splices. Computer programmed designs shall include summary information or each component demonstrating section meets the design requirements.

Manufacturer Qualifications:

Certifications:
- Welder Qualifications.
- Weld Inspector Qualifications.
- AISC Bridge Fabricator Certification.
- Material testing.

Coating system information.

Metal deck information.

Shop Quality Control Plan.

Shop Weld Inspection Records.

Installation & Lifting Procedures.

Project Specific Warranties.

2.0 SYSTEM DESCRIPTION

2.1 General:
- 2.1.1 Design and fabrication for half through truss (no overhead bracing) bridge of steel construction with composite concrete metal deck. Bridge type shall be underhung to limit overall bridge depth below the deck with no longitudinal girders.
- 2.1.2 Contractor shall coordinate architectural attachments as indicated on the Drawings.

2.2 Plan dimensions: 12'-0" wide (between inside face of truss) X 46'-0" span (end-to-end of truss) nominal.

2.3 Horizontal Curvature: 200'-0" radius.

2.4 Truss height: 4'-0" above concrete deck surface.

2.5 Truss bay spacing: Spacing shall be selected by the bridge manufacturer. Spacing shall be equal across length and be identical at both trusses.

2.6 Truss clearance: Bridge deck depth, including deck and supporting members, shall provide the clearance as indicated on the Drawings. Maximum overall depth below top of concrete deck shall be 14-inches.

2.7 Camber: 6-inch under Dead load. Bridge shall have a positive camber under any loading combination.

2.8 Design temperature range: Shall be site specific and determined per *AASHTO LRFD* Article 3.12.2.

2.9 Performance requirements:

2.9.1 Loading: The load combinations and load factors to be used shall be as specified in AASHTO LRFD Table 3.4.1-1, with the following exceptions:

- Load combinations Strength II, Strength IV, and Strength V need not be considered.
- The load factor for Fatigue I load combination shall be taken as 1.0, and Fatigue II load combination need not be considered.

2.9.2 Dead: Shall consider self-weight of bridge and architectural elements as indicated on the Drawings. Dead load shall include self-weight of concrete composite deck.

2.9.3 Pedestrian: Shall be designed for a uniform pedestrian loading of 90 psf. This loading shall be patterned to produce the maximum load effects. Consideration of dynamic load allowance is not required with this loading.

2.9.4 Vehicle: AASHTO H10.

2.9.5 Wind:

2.9.5.1 Shall be designed for wind loads as specified in *AASHTO Signs*, Articles 3.8 and 3.9. The loading shall be applied over the exposed area in front elevations of both trusses including all enclosures.

2.9.5.2 In addition to the wind load specified above, a vertical uplift line load as specified in *AASHTO LRFD* Article 3.8.2 and determined as the force caused by a pressure of 20 psf over the full deck width, shall be applied concurrently. This loading shall be applied at the windward quarter point of the deck width.

2.9.6 Seismic: Shall be designed for seismic loading as specified in Section 3.10 of *AASHTO LRFD*. The transverse loads shall be calculated considering the transverse period of the bridge and longitudinal loads shall be calculated using a period of zero. A response modification factor of 0.8 shall be used for the calculation of forces applied to the bridge anchorage. A response modification factor of 1.0 shall be used for the calculation of bearing reactions. The transverse seismic load shall be applied to all the bearings and the longitudinal seismic load shall be applied to the fixed bearings only. The vertical bearing reactions shall be calculated using an overturning force on the bridge based on the center of gravity of the bridge times the transverse seismic load.

3.0 DESIGN REQUIREMENTS

3.1 Modeling:

The bridge shall be modeled and analyzed utilizing a three-dimensional computer software which shall account for moments induced in members due to joint fixity where applicable. Moments due to both truss deflection and joint eccentricity shall be considered.

3.2 Lateral Frame and Member Design:

The bridge shall be designed and proportioned such that appropriate lateral stiffness is provided locally and globally, to ensure that the structure is stable.

The vertical truss members, floor beams, and their connections shall be proportioned to resist a lateral force applied at the top of the truss verticals at the center of the top chord. The lateral force shall be applied as an additional load to the top of the vertical at the center of the top chord, creating a cantilever moment, which is then added to the forces obtained from the three-dimensional model. The magnitude of this lateral force shall not be less than 0.01/K times the average factored design compressive force in the two adjacent top chord members increased by a factor of safety of 1.33.

The top chord shall be analyzed as a column with elastic lateral supports at the panel points, considering all moments due to in-plane and out-of-plane bending, along with moments due to eccentricities of the members.

The U-Frame Stiffness of the verticals and floor beams shall be as specified in *AASHTO Ped* Article 7.1.2, assuming that the vertical and floor beam connection is rigid.

The vertical and floor beam members shall be proportioned such that the effective length factor, K, used in the design of the top chord shall not be greater than 2.0.

The end verticals shall be designed as a simple cantilever to carry the loads obtained from the three-dimensional model, plus the cantilever moment due to a lateral load of 0.01 times the axial force in the end vertical, applied laterally at the top end of the end vertical at the center of the top chord.

The floor beams shall be sized for the forces obtained from a simple span, pinned end analysis, or from the forces obtained from the three-dimensional model, whichever controls.

The diagonals and brace diagonals shall be analyzed as pinned-end connection members.

Interior verticals shall be analyzed as pinned-end connections unless longitudinal forces are applied to the verticals such as when the brace diagonals are connected to floor beams on an H-Section floor beam configuration. When longitudinal forces are applied to the verticals they shall be analyzed as fixed-end connections.

All other members shall be analyzed as fixed-end connections.

HSS member connections shall be evaluated per the requirements of *AISC 360* Chapters J & K.

3.3 Deflections:

The vertical deflection of the bridge due to the unfactored pedestrian live loading shall not exceed 1/360 of the span length.

The horizontal deflection of the bridge under unfactored wind loading shall not exceed 1/360 of the span length.

3.4 Fracture:

The fracture toughness requirements and designation of Fracture Critical Member and Main Member designation are hereby waived for these structures.

3.5 Vibrations:

The fundamental frequency (f) of the pedestrian bridge in the vertical direction, without live load, shall be greater than 3.0 hertz (Hz). The fundamental frequency of the pedestrian bridge in the lateral direction, shall be greater than 1.3 Hz. If the fundamental frequency cannot satisfy these limitations, then the bridge should be proportioned such that either of the following criteria are satisfied:

$$f \geq 2.86 * \ln(180/W)$$

or

$$W \geq 180 * e^{(-0.35 * f)}$$

Where W is the weight of the bridge in kips and f is the fundamental frequency in the vertical direction in Hz.

4.0 MATERIALS

4.1 Structural Steel:

General: Steel sections shall meet the requirements of Section 05120 - Structural Steel.

All members of the truss and deck support system shall be fabricated from square or rectangular hollow structural shapes (HSS), with the exception that floor beams may be wide flange shapes.

Minimum thickness of structural shapes: 3/16-inches.

All open ends of end posts and floor support beams shall be capped and seal welded with 3/16-inch minimum plates.

Drain holes shall be provided for all sections at the low point of the member that may become filled with water.

4.2 Fasteners:

Structural bolts used to field splice or connect all main members shall be ASTM F3125 Grade A325. Nuts shall be ASTM A563. Bolt finish shall be either Type 3 (Weathering) or Type 1 (Hot-Dipped or Mechanically Galvanized).

Bolts used for the connection of a wood rub rail shall be 18-8 or 316 Stainless Steel, 1/4-inch diameter carriage bolts.

Power Actuated fasteners shall be Hilti sheet metal nail X-ENP-19 fastener.

Other miscellaneous fasteners shall be ASTM A307 zinc plated or galvanized.

4.3 Metal deck:
4.3.1 As specified in Section 05300 – Metal Deck.

4.4 Concrete:
4.4.1 Type required for structures as specified in Section 03300 - Concrete.
4.4.2 Finish: Broom finish as specified in Section 03300 - Concrete.

4.5 Anchor bolts:
4.5.1 General: As specified in Section 03250 - Concrete Accessories.
4.5.2 Minimum anchor bolt size shall be 1-inch diameter with 12-inches of embedment.
4.5.3 Material: 316 stainless steel.

5.0 FINISH

General: Bridge structural members shall be coated as specified in Section 09800 – Protective Coating.

Color: As selected by Owner.

6.0 APPURTENANCES

6.1 Expansion Joint:

The gap between the end of the bridge deck and the back wall of the foundation system shall be sized to accommodate bridge movements due to thermal expansion of the bridge over a design temperature range. The gaps shall be covered with a steel cover which attaches to the bridge and extends over the gap and onto the top of the foundation system back wall. The steel cover shall have its edges rounded or beveled at a 45-degree angle.

7.0 BEARINGS

7.1 Bearing Type :

The fixed bearings shall be a steel bearing plate sitting on steel setting plate with a Cotton Duck Pad (CDP). The expansion bearings shall have an upper stainless steel slide plate and a Teflon slide surface bonded to the CDP. The CDP shall be designed to transfer all loads from the bridge to the foundation using AASHTO Method A Design. Size shall be per the loads and anticipated rotations at the bearings determined by the Bridge Manufacturer. The upper stainless steel plate shall be large enough to cover the lower Teflon slide surface throughout the entire design temperature range. The Teflon shall be virgin PTFE resin tested per ASTM D4894 or D4895 and reinforcing agents including milled glass fibers. The stainless steel shall be no less than 11-gage A240 Type 304 having a surface finish of less than 20 microinches RMS. PTFE size shall be per loads and anticipated movements determined by the Bridge Manufacturer. Both expansion and fixed bearing plates shall have slotted holes for ease of installation. Bottom nut on the anchor bolt shall be finger tight and top nut tight at expansion bearings and both nuts on anchor bolt tight at fixed bearings.

7.2 Non-Shrink Grouting:

The bridge will be supplied with a lower setting plate. This setting plate shall be leveled and shimmed to the proper elevation. The space between the lower surface of the setting plate and the foundation surface shall be filled with a non-shrink grout as specified in Section 03315 – Grout.

8.0 FABRICATION

8.1 Welding:

Welding procedures and weld qualification test procedures shall conform to the provisions of *AWS D1.1*. Filler metal shall be in accordance with the applicable AWS Filler Metal Specification and shall match the corrosion properties of the base metal.

8.2 Welders:

Welders shall be qualified for each process and position used while fabricating the bridge. Qualification tests shall be in accordance with AWS D1.1. All weld qualifications and records shall be kept in accordance with the Fabricator's Quality Assurance Manual which has been approved and audited by AISC as the basis for certification.

8.3 Shop Splices:

Shop splices for main truss members shall be full penetration welds all around the perimeter of the member. These shop splices shall be performed using a full perimeter backing plate. After welding of the shop splices, the weld shall be ground smooth to match the perimeter of the member.

Shop splices for all horizontal rail components to be located at the centerline of the truss verticals, each end welded to the truss vertical and seal welded together. Exposed surface of the seal welds as seen from the deck shall be ground smooth.

Shop spliced for all horizontal stringers to be located at the centerline of the floor beams, each end welded to the floor beam and seal welded together.

8.4 Bolted Splices:

For shipping purposes, the bridge may be fabricated in sections. Sections shall be field assembled using bolted connections. No field welding of members shall be allowed.

The chord members of the bridge shall be bolted such that at least two faces of the member are bolted. This is to provide reasonable force distribution around the perimeter of the member. Bolted splices shall be designed and fabricated such that the head of the bolt and washer are the only item exposed. No through-bolting of the member is allowed.

The diagonals and brace diagonals shall be bolted utilizing a through-bolt system with plates on the exterior faces of the members.

Coating: Bridge shall be coated as specified in Section 09800 – Protective Coating.

9.0 QUALITY CONTROL

9.1 AISC Certification:

The bridge shall be fabricated in a shop owned by the Bridge Manufacturer. The facility shall have up to date quality certification by AISC as Certified Bridge Fabricator - Advanced (Major) with Fracture Critical Endorsement and Complex Coating Endorsement (P1-Enclosed or P2-Covered).

9.2 Certified Weld Inspector:

The Bridge Manufacturer shall employ at least one Certified Weld Inspector (CWI), with endorsement by AWS QC1. At least one CWI shall be present during the complete fabrication of the bridge. The CWI shall provide written documentation that the bridge has been fabricated in accordance with these specifications and the approved design drawings.

9.3 Documentation:

Material Certifications shall be submitted for review for all materials within the bridge.

Documentation showing the performance of all critical quality checks shall also be submitted for review.

9.4 Non-Destructive Testing:

All welds within the structure, shall be visually inspected for conformance to size, under cut, profile, and finish.

All shop splices of main truss members shall be magnetic particle tested.

10.0 DELIVERY AND ERECTION

10.1 Delivery:

Deliver bridge undamaged and store out of contact with ground until installation.

10.2 Installation & Lifting Procedures:

The Bridge Manufacturer shall provide standard written procedures for lifting, setting, and splicing the bridge.

11.0 WARRANTY

The Bridge Manufacturer shall provide Owner warranty that states steel structure is free of defects in design, material, and workmanship. This warranty shall be valid for a period of one (1) year from the Statement of Completion of the Project. Coatings shall be warranted as specified in Section 09800 – Protective Coating.

END OF SECTION

SECTION 02900
LANDSCAPING

PART 1 - GENERAL

1.1 DESCRIPTION

A. Work Included:

1. All labor, materials, equipment, and appliances necessary to provide demolition; planting of new trees, plants, shrubs, vines, and ground cover; tree pruning and all required testings and inspections; maintenance of existing and new trees, plants and ground cover as indicated on the Contract Drawings, specified herein and as needed for complete and proper installation and maintenance.

B. Related Sections:

1. Documents affecting work of this Section include, but are not necessarily limited to the GENERAL CONDITIONS, SUPPLEMENTARY CONDITIONS, in DIVISION 1 - GENERAL REQUIREMENTS and other Sections of the Project Manual.

2. Site Demolition in Section 02220.

3. Site Clearing and Grubbing in Section 02210.

4. Rough Grading in Section 02310.

5. Irrigation System in Section 02810.

6. Cast-in-Place Concrete in Section 03300.

1.2 SUBMITTALS

A. Comply with provisions of Section 11 - SHOP DRAWINGS AND MANUFACTURER'S DATA of the General Conditions and Section 01330 - SUBMITTALS of DIVISION 1 - GENERAL REQUIREMENTS of the Project Manual.

B. Make all submittals within 90 calendar days after the Notice-To-Proceed.

C. Submit electronic copies of the following:

1. Complete lists of landscape materials and equipment including nursery's and manufacturer's names and address, specific trade names, catalog numbers and estimate quantity; complete with illustrations and/or photographs and descriptive literature and clearly mark or underline proposed items; list sources of landscape soils, and provide an agronomic soil tests on any imported soil.

2. Submit detailed plans as to how to excavate, box, haul and replant the existing plants indicated to be relocated.

3. Submit Herbicide/Pesticide Application Program.

4. Submit detailed layout of plants.

5. For contract-grown materials, submit contract growing nursery's name for approval prior to start of contract growing activity.

D. Shop Drawings: Required for any landscape structure as may be specified hereinafter in accordance with provisions of Section 11 - SHOP DRAWINGS AND MANUFACTURER'S DATA and Section 01330 - SUBMITTAL in DIVISION 1 - GENERAL REQUIREMENTS.

E. Disapprovals: Promptly resubmit for approval necessary data concerning a substitution for a disapproved item.

F. Procurement List: Use the approved list of landscape materials and equipment for procurement without deviation unless otherwise authorized in writing by the City Engineer.

G. Work Certification And Project Closure: Prior to job acceptance, written certifications accompanied with material invoices and following submittals, shall be submitted to the City Engineer. Each invoice shall list on the original, the job name and delivery address. The following submittals, but not necessarily limited to, shall be made:

1. Copy of soil analysis from certified soil laboratory as outlined under Section 01330 - SUBMITTALS.

2. Quantity and type of commercial and organic fertilizers.

3. Quantity and type of all specified soil amendments.

4. Quantity and type of planting tablets/tree stakes/root barriers.

5. Slurry mix of Hydraulic Method of Seed Lawn Planting.

6. Required submittals for palm tree certification and fertilization.

7. Quantity and type of herbicides and pesticides and their application program and registered labels.

8. Record Drawings and Record Project Manual for the irrigation and planting works.

9. Controller charts.

10. Results of mainline pressure testing (see irrigation specifications).

11. Modified Watering Schedules (if applicable).

12. Maintenance Log and Maintenance Schedules.

H. Bonds: Furnish a faithful performance bond in the amount specified in the Contract Documents required to cover the guarantees per Section 3.9.

1.3 QUALITY ASSURANCE

A. Workers: Use adequate number of skilled workers who are thoroughly trained and experienced in the necessary crafts and who are completely familiar with the specified requirements and the methods needed for proper performance of the Work of this Section.

B. Codes and Regulations: All materials and workmanship in this Section shall comply with the 2025 City of Los Angeles Building Code and Amendments, County, Federal and State Codes and Regulations. Contractor shall also comply with all referenced sections of the latest edition of the Standard Specifications for Public Works Construction (SSPWC) modified by Los Angeles City Bureau of Engineering Standard Plan S-610, and all applicable Standard Plans. All SSPWC and Los Angeles City Bureau of Engineering Standard Plans are published by and available through Building News (BNI) and online. Contractor to obtain and pay for all required permits. Deliver all permits and submit certifications of compliance to the City Engineer.

C. Quality and Size: Comply with current edition of the "Horticultural Standards" for number one nursery stock as adopted by the "American Association of Nurserymen".

D. All Plants:

1. Shall be true to name, size and growing specifications with the names, standards and practices in "American Association of Nurserymen".

2. In all cases, botanical names take precedence over common names.

1.4 GENERAL REQUIREMENTS

A. Approvals by the City Engineer:

1. All required agricultural suitability and fertility analysis or testing, and weed/pest control prior to placing top soil or soil amendments.

2. All work on sprinkler irrigation system prior to start of landscaping work.

3. All reviews on required submittals hereinafter specified.

4. All resubmittals requested by the City Engineer.

B. Inspection: Notify the City Inspector and/or other required local governing agency at least 72 hours prior to time of the following required inspections:

1. All subgrade and fill works.

2. All weed/pest control and soil fertilizing and conditioning.

3. All plant material at time of delivery to the job-site.

4. All trees (15 gallon can size and larger) at their source prior to delivery to the job-site or elsewhere as may otherwise be directed by the City Engineer or specified. All trees shall be tagged by the City Engineer or authorized representative with their signature.

5. All landscaping construction items prior to start of maintenance or plant establishment period.

C. Existing Utilities and Plant Materials: Protect utilities and/or plant materials, not designated for removal or modification, in place against damage resulting from work of this Contract. Perform any removal and/or modifications only on approval or instructions from the City Engineer or in accordance with applicable provisions. Replace damaged existing plant material with like type and size material. Determine the cost of irreplaceable plant material according to the "square inch" method as described by the Council of Tree and Landscape Appraisers, GUIDE FOR PLANT APPRAISAL, current edition.

D. Existing Tree Preservation: A certified Department of Recreation & Parks Arborist shall be invited to the project job start meeting. The tree preservation requirements must be adhered to by the Contractor. See Contract Drawings for procedures and contact personnel.

1. No equipment is to be operated or parked under a tree, nor shall any materials to be stored within the dripline of a tree or leaned against a tree trunk. Do not pile or compact soil within the dripline.

2. In areas of construction, protect soil surface from traffic compaction with 3 inches of mulch or overlapping 3/4 inch plywood.

3. No surface irrigation shall be installed within the dripline of a tree.

4. All work shall be in accordance with the City of Los Angeles Native Tree Ordinance.

5. No chemical herbicides are to be used within 100 feet of a dripline.

6. Do not nail grade stakes or anything else to trees.

7. Encroachment from paving or structures within the dripline of a tree shall be permitted only with written authorization from the certified Department of Recreation and Parks Arborist. No encroachment within 10 feet of a tree trunk will be permitted under any circumstances.

E. Oak Tree Preservation: All work around any existing oak trees shall follow this work procedures program. This program has been developed to minimize the impacts to each tree and protect them from unscheduled damage. This work shall not supersede any indicated measures in the City of Los Angeles Oak Tree Ordinance.

1. All work within a tree's root zone shall be observed by the certified Department of Recreation and Parks Arborist.

2. The extent of all affecting any oaks shall be staked by field survey and reviewed with the certified Department of Recreation and Parks Arborist prior to construction.

3. Any approved pruning of oaks shall be done by the certified Department of Recreation and Parks Arborist prior to the start of construction.

4. Hand dig a vertical trench at the final cut line to final grade and cleanly cut any roots encountered and seal with approved tree sealant. This procedure will protect the root system from unnecessary damage by excavation equipment.

5. A five (5) foot high chain link fence shall be constructed at the limit of approved work protect the trees and shall remain in place until completion of construction.

6. No further work within the root zone shall be done beyond that which was approved, without obtaining written approval from the certified Department of Recreation and Parks Arborist prior to proceeding.

7. The area within the chain link fence shall not be used for material, equipment storage or parking during construction.

8. During construction, the impacted trees should be closely monitored to further mitigate shock symptoms if they occur. The contractor should be prepared to provide temporary water to irrigate and wash the dust form foliage if needed. Contact the certified Department of Recreation and Parks Arborist if a decline in tree condition is noted.

F. If a tree that is designated to remain is removed or caused to be irreversibly damaged as determined by the certified Department of Recreation and Parks Arborist, a replacement tree matching in size, quality and variety shall be installed using an installer designated by the Arborist.

G. Verification of Dimensions and Quantities: Verify all dimensions and quantities prior to start of work. Furnish the quantities as may be necessary to do the specific work. Promptly notify the City Engineer of any discrepancies between the Drawings and the Project Manual and/or actual job-site conditions which would affect the proper execution of the landscaping work. Do not work in areas where such discrepancies occur until further instructed by the City Engineer.

1.5 DELIVERY, STORAGE AND HANDLING

A. Delivery:

1. Notify the City Engineer of the delivery a minimum of 48 hours in advance so the plant materials may be inspected upon arrival at the job-site. All plant material judged by the City Engineer as unacceptable shall be removed immediately from the job-site by the Contractor. All trees not accompanied with the tags signed by the City Engineer or the authorized representative, or required plant pathologist/horticulturist; or plant not correspondent with contract requirements shall be rejected and immediately removed from the job site.

2. Protect plants during delivery against damage to root balls or desiccation of leaves. Protect trees during transport by tying in the branches and covering all exposed branches.

3. Deliver fertilizer to the job-site in the original and unopened containers bearing manufacturer's guarantee chemical analysis, name, trade mark or trade name in conformance with Federal and Local law. In lieu of containers, fertilizer may be furnished in bulk and a certificate indicating the above information shall accompany each delivery.

4. During delivery, protect sod from drying out and from contaminants.

5. Hydroseed Delivery: The contractor shall supply a delivery receipt to the City Engineer or authorized representative certifying conformance with the specified hydroseed mix and indicating that the slurry has not been mixed for longer than two (2) hours. Slurry which has been mixed longer than two (2) hours shall be recharged with 50 percent more of the specified seed mix, at the Contractor's expense. Delivery tickets shall be forwarded to the City Engineer.

B. Storage:

1. Store plants, trees, etc. at the job-site where directed by the City Engineer.

2. Keep fertilizer in dry storage away from contaminants. Loose fertilizers and soil amendments shall be kept covered with a tarp.

3. Store plants not installed on the day of arrival at the job-site as follows:

a. Outside storage to be protected from wind.

b. Keep plants in containers in a moist condition until planted by watering with fine mist spray.

4. Sprinkle sod with water and cover with moist burlap, straw or other covering acceptable by the City Engineer. Protect sod from exposure to wind and direct sunlight. All covering shall permit air circulation and alleviate any heat development.

C. Handling: Transport and handle plants with care to ensure protection against injury.

PART 2 - PRODUCTS

2.1 MATERIALS

A. General: All landscaping materials for soil conditioning, weed or pest control, or planting shall be first grade, commercial quality and shall have certificates.

B. Topsoil: Designated as "Imported/Class A" or "Unclassified/Class C" as specified herein. The City Engineer or authorized representative shall determine the suitability of topsoil prior to use. Transport topsoil from the source to its final position unless stockpiling is specified.

1. "Imported/Class A" Topsoil: From a source outside the limits of the project selected by the Contractor and in compliance with Inspection requirements specified in General Conditions. Within 90 days after Notice-To-Proceed submit the proposed source of topsoil to the City Engineer for approval. After the City

Engineer or authorized representative makes an initial inspection at the site of the proposed imported material, the Contractor shall perform the required tests as deemed necessary to determine that the material meets the requirements with the accompany of City Engineer. The Contractor shall submit to the City Engineer a written report of a soil testing laboratory registered by the State of California for agricultural soil evaluation which states that the proposed source complies with this Section, and proposed soil amendments. After the testing report and proposed soil amendments are reviewed by the City Engineer, the Contractor shall comply with all the recommendations of the soil testing laboratory and add any additional soil amendments necessary to achieve proper nutrient levels to support a healthy plant growth, at no additional cost to the City.

"Imported/Class A" topsoil shall be of a uniform composition and structure, fertile and friable sandy loam garden soil, and be free of roots, clods and stones larger than1-inch in greatest dimension, pockets of coarse sand, noxious weeds, sticks, brush and other litter and not be infested with nematodes or other undesirable insects and plant disease organisms.

"Imported/Class A" topsoil shall meet the following additional requirements.

a. Gradation Limits: Sand - 50-80 percent, clay - 20 percent maximum, and silt - 30 percent maximum. The sand, clay and silt gradation limits shall be as defined in ASTM D-422 – TEST METHOD FOR PARTICLE – SIZE ANALYSIS OF SOILS.

b. Permeability Rate: Hydraulic conductivity rate shall be not less than one inch per hour nor more than 20 inches per hour when tested in accordance with the USDA Handbook Number 60, method 34b or other approved methods.

c. Agricultural Suitability and Fertility Analysis Tests: The topsoil shall be fertile and friable garden soil suitable for sustaining and promoting the growth of the specified plants. The topsoil shall comply with maximum permissible element concentration.

2. "Unclassified/Class C" Topsoil: Prior to any excavation, grading or fill works; the Contractor shall take six (6) test samples of the on-site soils at the locations and depths as specified and directed by the City Engineer or authorized representative. The soil samples shall be analyzed for agricultural suitability and fertility. The Contractor shall submit a written report of a soil testing laboratory registered by the State of California for agricultural soil evaluation and proposed soil amendments to the City Engineer for approval. Soil Amendments shall be added in accordance to the soil testing laboratory recommendations. The Contractor shall include in the construction schedule sufficient time for the testing processes and the grading work.

C. Fertilizers and Conditioning Materials: Comply with the applicable requirements of the State Agricultural Code. All fertilizing materials shall be packaged, first grade, commercial quality products identified as to source, type of material, weight and manufacturer's guaranteed analysis. Fertilizing material shall not contain toxic ingredients or fillers in quantities harmful to human, animal, or plant life.

The Contractor shall submit a certificate of compliance stating that the material substantially complies with the Project Manual, in accordance with provisions of Subsection 1.2(b) hereinbefore specified:

1. Bone Meal: Commercial raw bone meal shall be finely ground, steamed dry material with a minimum analysis of 2.5 percent nitrogen and 22 percent phosphoric acid.

2. Agricultural Gypsum: Hydrated calcium sulfate product containing 23 percent calcium and 18 percent sulfur with a guaranteed analysis of 84 percent calcium sulfate.

3. Soil Sulfur: Guarantee analysis of 99 percent sulfur.

4. Superphosphates: First-grade finely ground phosphate rock used for agricultural purpose, containing minimum 18 percent phosphoric acid by volume.

5. Commercial Fertilizer: Slow-release pelletized or granular product having a chemical analysis as per the recommendations of the certified soils laboratory report as outlined in this Project Manual, free-flowing material delivered in unopened sacks. Do not use material, which becomes caked or otherwise damaged. Shall have a minimum analysis of 1-1.3-5 (N-P-K), derived from rock phosphate, peat moss, chicken manure, sand, sulfate of potash, gypsum, and EDDHA chelate.

6. Organic Soil Amendment: Organic Soil Amendment shall be selected products as described herein.

   a. Type 1 Organic Soil Amendment shall be a ground of processed wood product derived from Redwood, Fir or Cedar sawdust, or from the bark of Fir or Pine treated with a non-toxic agent to absorb water quickly and shall comply with the following requirements.

GRADATION	
Sieve Size	Percent Passing
1/4-inch #8 #35	95% minimum 80% minimum 30% maximum
Nitrogen Content	%, Dry Weight
Redwood Fir Cedar Fir Bark Pine Bark	0.4 - 0.6% 0.56 - 0.84% 0.56 - 0.84% 0.8 - 1.2% 0.8 - 1.2%

Salinity: Maximum saturation extract conductivity
2.5 millimhos/centimeter at 25 degrees Celsius.

Wetability: When one teaspoon of tap water is applied to 4 cubic inches of the air-dried products, the material shall become completely damp in a period not exceeding 2 minutes.

b. Type 2 Organic Soil Amendment shall be a relatively dry friable organic composite derived from sewage sludge processed for agricultural use. It shall contain at least 1 percent nitrogen by dry weight and comply substantially with the gradation for Type Organic 1 Soil Amendment.

c. Type 3 Organic Soil Amendment shall be hay and stable bedding which has been processed and used as the growing medium for the commercial production of mushrooms. It shall contain at least 1 percent nitrogen by dry weight and comply substantially with the gradation for Type 1 Organic Soil Amendment.

d. Type 4 Organic Soil Amendment shall be Peatmoss, brown compressed sphagnum or hypnum.

e. Type 5 Organic Soil Amendment shall be seasoned tree chip mulch, free of all foreign matter including weed and tree seeds. Chip size shall be a minimum one (1) inch in diameter and not more than two (2) inches in diameter. Contractor shall submit sample to City Engineer prior to application.

f. Type 6 Organic Soil Amendment shall be either threshed new straw or stable bedding material derived from rice, oats, or barley. Straw in an advanced state of decomposition will not be acceptable.

7. All Organic Soil Amendment shall conform with the following criteria:

a. Humus material shall have an ash content of no less than 8 percent and no more than 50 percent.

b. The pH of the material shall be between 6 to 7.5.

c. The salt content shall be less than 10 millimho/cm at 25° C. (ECe less than 10) on a saturated paste extract. If the ECe exceeds 10 millimho/cm, the maximum rate of use shall not exceed 15 percent by volume.

d. Boron content of the saturated extract shall be less than 1.0 parts per million.

e. Silicon content (acid-insoluble ash) shall be less than 20 percent.

f. Calcium carbonate shall not be present if to be applied on alkaline soils.

g. Sludge-based materials are not acceptable if the soil already has a high level (toxic level) of zinc, copper or other heavy metals based on soil analysis.

h. Carbon: Nitrogen ratio is less than 25:1.

i. All compost shall be aerobic without malodorous presence of decomposition products.

j. Maximum total permissible pollutant concentrations in amendment in parts per million on a dry weight basis:

Arsenic	20	Copper	150	Selenium	50
Cadmium	15	Lead	200	Silver	10
Chromium	300	Mercury	10	Vanadium	50
Cobalt	50	Molybdenum	60	Zinc	300
Nickel	100				

Higher amounts of salinity or boron may be present if the soils are to be pre-leached to reduce the excess or if the plant species will tolerate the salinity and/or boron.

8. Hydroseed Additives shall meet the following guidelines:

a. Mulch Fiber shall consist of virgin wood fiber of Aspen or Alder. It shall not contain any waste paper, newsprint or straw material. The fiber shall contain a green dye (color additive) to facilitate application.

b. Hydroseed stabilizer shall be a tackifier consisting of natural mucloid materials (finely ground outer seed coatings) for the purpose of binding seed and soil together until germination and growth begins.

c. Soil activator shall be a finely screened, non-abrasive combination of peat moss, composted chicken fertilizer, phosphorus and potassium having a minimum N-P-K of 1.2—1.4-5.

9. Fertilizer Tablets shall be tightly compressed, long lasting, slow release tablets derived from urea, methylene ureas, calcium phosphate, potassium sulfate, calcium sulfate, magnesium oxide, sodium borate, copper sulfate, iron sulfate, manganese sulfate, and zinc oxide. N-P-K shall be 20-10-5. Tablet size shall be 21 grams. Rate and application shall be per these specifications and Contract Drawings.

10. Water holding polymer shall be "Broadleaf P-4".

D. Plant Materials

1. General: The plant names shown or listed on the Contract Drawings shall conform to the "Sunset, Western Garden Book", latest edition; grown in the State of California, unless otherwise specified.

a. Type and Size: Plant materials shall be as listed on the Contract Drawings, unless otherwise instructed by the City Engineer.

b. Tag one plant of each variety for identifying purposes.

c. All plants shall be inspected and approved prior to planting as per provisions of Subsection 1.4(B) herein before specified.

d. Substitutions: When plants of a specified kind or size are not available, substitution may be made upon approval by the City Engineer, in accordance with Section 12 - REFERENCE TO TRADE NAMES of the General Conditions and Section 01330 - SUBMITTAL. Contractor shall provide information regarding his attempts to locate such material.

e. All plants shall have a growth habit normal to the species in accordance with U.S.A. Standards for Nursery Stocks, latest editions; shall be sound, healthy, vigorous and free from insect pests, plant disease, sun scalds, fresh bark abrasions, excessive abrasions or other objectionable disfigurements. Tree trunks shall have normal well-developed branch systems, and vigorous and fibrous root system, not root bound and shall be free of kinked or girding roots.

f. Other than normal side pruning during the growth period, no pruning shall be done prior to inspection at the nursery.

g. Plant materials specified for adverse site conditions shall be site acclimated prior to planting, either through purchase from local nurseries or site storage for a period appropriate to the project region. Six weeks shall be considered a minimum time period, but the final decision is based upon the specific plant.

2. Plant Material:

a. Trees: All trees shall conform to types, sizes and heights noted on the Contract Drawings. All trees shall be measured for height from the root crown to the last division of the terminal leader and measured for the diameter 3-feet above the root crown. All palm trees shall be measured for height from the root crown to the brown trunk and measured for the diameter 3 feet above the root crown. Trees and palms shall stand erect without support.

b. Container Plants: Specified type and size selected from high quality well-shaped nursery stock.

c. Flatted Plants: Grown and remain in the flat until transplanted at the job site. The soil and spacing of the plants in the flat shall insure the minimum disturbance of the root system at time of transplanting. Maximum plants per flat are to be between 64 to 100 plants.

d. Shrubs: Specified type and size selected from high quality well-shaped nursery stock.

e. Stolons: Fresh, clean, living section or runners of hybrid Bermuda grass or ground cover materials, are free of turf disease, insects or weeds, and capable of healthy vigorous growth. For mechanical or hand spreading, the Bermuda grass stolons shall be 1" to 4" inches long.

f. Sod (Turf Grass): Mixture of specified proportions of well established lawn grass, vigorous well rooted healthy turf, free from disease, insect pests, weeds, other grasses, stones and any other harmful or deleterious matter. Sod shall be machine cut to between 1/4-inch and 5/8-inch thick, not including top growth or thatch. Type shall be as specified on Contract Drawings.

g. Seed: Fresh, clean, new crop seed, mechanically premixed to specified proportions; delivered to the site in original unopened containers bearing the dealer's guaranteed analysis and germination percentage, and a certification or stamp of release by a County Agriculture Commissioner. All seed mix shall be in original unopened containers and be subject to inspection prior to mixing.

h. Seed Lawn Planting Mixtures:

1. Method A (Dry Method) Mixture: Mixture of seed, fertilizer, mulch and other material as specified on Contract Drawings.

2. Method B (Hydraulic Method): Mixture of seed, fertilizer fiber and other materials in the slurry mixture shall be as specified on the Contract Drawings.

i. Lawn repair for irrigation trenching: As an alternate to seeding existing sod at trenching location may be carefully cut, removed, properly stored and reused to sod trenches after backfilling and densification.

j. Cuttings: Fresh stock cut with a sharp hand tool from the stems of healthy vigorous plants of the plants specified. If not otherwise specified, the length of the cutting shall be in accordance with the best horticultural practice.

E. Construction Materials: (As Applicable)

1. Lumber: "Construction Heart-Rough Redwood" as noted on the contract Drawings.

2. Steel Pipe: Galvanized steel, Standard Weight (Schedule 40) complying with ASTM A53 - SPECIFICATION FOR PIPE, STEEL, BLACK AND HOT-DIPPED, ZINC-COATED, WELDED AND SEAMLESS.

3. Nails, Fasteners, etc.: Hot-dipped galvanized and commercial quality materials.

4. Fabricated Metal Items: Steel conforming to ASTM A36 - SPECIFICATION FOR CARBON STRUCTURAL STEEL.

5. Concrete Items: Standard psi concrete as per Los Angeles City Building Code and applicable amendments or as provided in Section 03300 – CAST-IN-PLACE of the Project Manual.

6. Provide other materials, not specifically described but required for a complete and proper installation, as selected by the Contractor subject to the approval of the City Engineer.

F. Header Board and Mow Strip:

1. Concrete Mow Strip: 8" inches square x 6" inches in depth, complete with tooled control joint 10 feet apart; at the beginning and end of curve, and at changes of direction; and where header abuts an existing or new structures and improvements, or as indicated on the Contract Drawings.

2. Wood Header board: 2 inches wide x 4 inches depth for straight runs or curves having a radius of 20' or more. For curves of less than 20' radius use six (6) 3/8" x 3 1/2-inch redwood bender boards laminated together. Header board stock supplied in lengths at least 10 feet long. Stakes shall be pointed 2 inches x 4 inches and at least 18 inches long. Joint splicing lumber 1 inch x 4 inches x 24 inches long.

3. Plastic Header board: Shall be made from recycled insect-resistant polyethylene, ultra-violet stabilized and shall not absorb liquids. Shall be 2 inches x 6 inches. Stakes shall be pointed 2 inches x 4 inches and at least 18 inches long. Install in accordance with details in Contract Drawings.

G. Tree Stakes:

1. Triple Tree Staking as designated on the Contract Drawings or herein.

a. Wood tree stakes 2-inches in diameter by 8-feet long, lodgepole grade, pressure treated, capable of standing in the ground at least two years.

H. Tree Ties: Contractor shall use "Cinch-Tie" type or tire cord tie. No hose and wire ties will be accepted:

1. Cinch-Tie: Flexible vinyl with adjustable interlocking capability or approved equal.

2. 3/4 inch wide x 1 foot long tire cord band with #18 ties wires wrapped around stake 2 times. Ends shall be twisted together and secured to stake with 6d nail.

I. Root Barrier: Install root barrier in all tree planters, in accordance with the Los Angeles City Bureau of Engineering, Standard Plan S-456, latest edition.

J. Slope Stabilization and Erosion Control Material: Jute Mesh material shall be light weight, green color, fire retardant, open weave construction and shall have a minimum 4 year longevity. Material shall handle maximum water flow of 8 feet per second. Other commercial items available for stabilizing or controlling erosion, such as Wire Mesh, Aquatain, Verdyol Complex Bemis or Soil Seal are not permissible without the approval by the City Engineer.

K. Pesticides/Herbicides:

1. Pre-Emergent Herbicides: Selected from the broad spectrum of commercial brands available subject to approval by the City Engineer and not in conflict with the fertilizing and conditioning materials and any regulations governing its use. (Balan Granular, or equal.)

2. Post-Emergent Herbicides: Comply to all governing regulations and subject to approval by the City Engineer. Contractor shall identify the location of each

proposed usage of Post-Emergent Herbicide. Post-Emergent Herbicide shall be type recommended or suitable for each plant material. Roundup, or approved equal shall be used for non-selective weed control.

3. Unless prohibited by the County Agricultural Commissioner, pesticides may be used for planting work. Usage of pesticides and herbicides shall conform to the requirements of the California Food and Agricultural Code and requirements. Weed oil and granular or pellet forms of pesticides shall not be used.

4. The contractor shall abide by all laws and codes governing weed abatement operations including but not limited to CAL-OSHA requirements and the Sate of California Healthy Schools Act of 2000 (AB2260), herein called "Schools Act." The areas governed by the Schools Act include but are not limited to locations adjacent to school age children.

PART 3 - EXECUTION

3.1 GENERAL

A. The Landscape work shall not be performed at any time when it may be subject to damage by climatic conditions.

B. The Contractor shall verify all dimensions shown on the Contract Documents and at the site.

C. In case of conflict between the plant schedule totals and total plant count of the contract documents, the Contractor shall provide the higher number of plants.

D. Delivery of material shall begin only when it is ready for the work and after the inspections are made and the required samples and tests have been reviewed by the City Engineer. All materials furnished for the work shall be not less than the reviewed sample.

E. The Contractor shall provide temporary fencing, barricades, covering, or other protection to preserve existing landscaping items indicated to remain and to protect the adjacent properties and other structures from damages by the landscape and other contract work.

F. The Contractor shall abide by the Tree Preservation Guidelines, Section 1.4.D herein for all trees indicated to be saved. The Contractor shall retain the services of a tree surgeon approved by the City Engineer and certified Department of Recreation and Parks Arborist to repair damage to existing trees. Existing trees that are to be saved and which cannot be restored to full growth, as determined by the certified Department of Recreation and Parks Arborist shall be replaced per the Tree Preservation Guidelines. If there are oak tree on the project site the Contractor shall abide by the City of Los Angeles Oak Tree Ordinance.

G. The Contractor shall remove and/or relocate landscape items such as trees, shrubs, grass, other vegetation, improvements, and obstructions. Plant material to be removed shall be disposed of off the site in a legal and proper manner.

H. The Contractor shall abide by the Tree Protection guidelines, as specified in Section 02900 Attachment A - Tree Protection Specifications for all trees that occur within

the area of work, as shown on the plans, that are not specifically designated for removal. The tree protection zones as determined by the Recreation and Parks (RAP) Forestry shall be protected by the Contractor adhering to the requirements specified within the Tree Protection Specifications. Attachment No. 1 to these Specifications includes a preliminary Phasing Map to illustrate suggested staging area outlines and tree protection zones, which shall be finalized by the Contractor.

3.2 SURFACE CONDITIONS

Examine the areas and conditions under which work of this Section will be performed. Correct conditions detrimental to timely and proper completion of the work. Do not proceed until detrimental conditions are corrected.

3.3 AGRICULTURAL SUITABILITY AND FERTILITY ANALYSIS TESTS

A. General: Except noted otherwise Contractor shall submit the proposed Imported/Class A Topsoil for Agricultural Suitability and Fertility Analysis. Contractor shall after completion of all rough grading operations sample all remaining on-site soil proposed to be used for top soil. The Contractor shall obtain the number of soil samples as specified and submit them to a certified soil laboratory for required soil analysis. The location of the soil sample and intent of the soil analysis are to provide the following:

1. Accurate soil amendment and fertilizer recommendations with regards to type, quantity and procedure to create planting soil for plant material which includes trees, shrubs, ground covers and turf.

2. Identify any potential problems in the relationship between specified of plant materials and existing soil conditions that may ultimately affect plant growth.

B. Samples shall be taken by a technician from certified soil laboratory. Recommendations for appropriate location, quantity, and method of obtaining samples shall be submitted by a certified technician and reviewed by the City Engineer.

1. Sample Taken For On-Site Soil after Completion of Grading or Clearing Operations:

a. Stockpile: Unless specified otherwise, take representative samples at locations and desired depth as directed by City Engineer.

2. For on-site soil, use a soil probe or soil anger to remove a core samples. Otherwise use a shovel to dig a hole to the desired depth. Sample the soil from the side of the hole by scraping it with a trowel. The tools need to be clean and not rusty. Avoid sampling when the soil is to wet.

3. Sample Taken For Import Top Soil: Unless specified otherwise, two (2) samples shall be taken at the source with the accompany of City Engineer or the authorized representative after initial site inspection is made and submittals are reviewed.

C. Contractor shall provide the City Engineer with a copy of the completed report on laboratory letterhead for review, in accordance with Section 11 - SHOP DRAWINGS AND MANUFACTURER'S DATA of the General Conditions prior to planting commencement.

D. Submitted recommendations shall include soil amendments and fertilization for initial planting, as well as any measures to be taken during the plant establishment period. Submittal shall include a narrative explaining the criteria employed to determine the soil sampling sites.

E. Agricultural Suitability and Fertility Analysis:

1. Must include pH measurement in the Saturation Extract, Electrical Conductivity of the saturation extract and Sodium Adsorption Ratio of the saturation extract. The approved procedures are the following:

pH	Method 21
Saturation Extract	Method 2
Sodium Adsorption Ration	Method 20b

Methods of the United States Salinity Laboratory as published in the Agricultural Handbook Number 60 entitled "Diagnosis and Improvement of Saline and Alkali Soils".

2. The following nutrients and elements must be determined with an approved extraction method. Interpretation data must be given citing concentrations which are considered to be low, medium and high:

a. Boron, Calcium, Copper, Iron, Magnesium, Manganese, Molybdenum, Phosphorus, Potassium, Sodium, Sulfur, and Zinc.

b. The approved methods are those cited by the Council on Soil Testing and Plant Analysis and those methods currently used by Soil Scientist and Agronomists and published in Communications in Soil Science and Plant Analysis, Soil Science and Soil Science Society of America Journal. Approved methods are Mehlich Number 3, Bray Pl, Bray P2, Olsen P, DTPA, Ammonium Acetate, Ammonium Bicarbonate-DTPA, and Hot Water Extract for Boron.

3. The saturation extract must be analyzed for Calcium, Magnesium, Sodium, Boron, Chloride, Nitrate and Sulfate.

4. The following trace metals must be measured by the DTPA extract:

a. Aluminum, Arsenic, Cadmium, Chromium, Cobalt, Lead, Lithium, Nickle, Selenium, Silver, Strontium, Tin and Vanadium.

5. The presence of Calcium Carbonate and/or Magnesium Carbonate must be determined.

6. Soil Texture and Organic Matter content may be estimated or determined by commonly used methods.

7. Interpretation of nutritional deficiencies or excesses and potential toxicities must be given.

8. Determine the following by methods approved by the American Society of Agronomy as published in the Methods of Soil Analysis, methods of the United States Salinity Laboratory as published in the Agricultural Handbook

Number 60 entitled "Diagnosis and Improvement of Saline and Alkali Soils," and bulk density of clods by the method published in Soil Science, vol 155, 325-330 (1993):

a. Exchangeable Ammonium Cation.

b. Base Saturation.

c. Cation Exchange Capacity.

d. Carbonates Determination.

e. Soil Bulk Density (Compaction).

f. Sand, Silt and Clay Determination.

g. Water Infiltration Rate – Method 34b of Agricultural Handbook Number 60.

h. Elemental determinations to made according to methods approved by the EPA or by the American Society of Agronomy.

9. Growth Test for Toxic Constituents and/or Poor Physical Properties

a. Grow a dicot plant species and a monocot species with and without activated charcoal. Measure yield and percent of germination for all treatments. Report conclusions and findings.

F. Acceptable Elements:

1. The range of the essential elemental concentration in soil shall be as follows:

a. Ammonium Bicarbonate/DTPA Extraction, parts per million (mg/kilogram).

	Dry weight basis
Phosphorus	2 - 40
Potassium	40 - 220
Iron	2 - 35
Managanese	0.3 - 6
Zinc	0.6 - 8
Copper	0.1 - 5
Boron	0.2 - 1

Magnesium	50 - 150
Sodium	0 - 100
Sulfur	25 - 500
Molybdenum	0.1 - 30

b. If the soil pH is between 6 and 7, the maximum permissible elemental concentration shall be reduced 50 percent. If the soil pH is less than 6.0, the maximum permissible elemental concentration shall be reduced 75 percent. No more than three metals shall be present at 50 percent or more of the above values.

2. Germination and growth of plants shall not be restricted more than 10 percent compared to standard controls. Standard controls shall be both moncots and dicots. Total Petroleum Hydrocarbons shall not exceed 100 mg/kg dry soil measured per the modified EPA Method No. 8015. Total aromatic Volatile Organic Hydrocarbons (Benzene, Toluene, Xylene and Ethylbenzen) shall not exceed 2 mg/kg dry soil measure per EPA Methods No. 8020.

3. Electrical Conductivity, less than 3.0 millimhos/centimeter at 25 degrees Celsius.

3.4 GRADING AND SITE PREPARATION:

A. Rough Grading:

1. Unless specified otherwise, remove existing soil, debris, weeds, roots and foreign material under the landscape area; perform clearing and grubbing in accordance with Subsection 3.4 of Section 02310 – EARTHWORK.

2. Scarify and compact the existing subgrade to a depth of 24 inches and of Section 02310 - EARTHWORK of the Project Manual prior to backfilling with topsoil and soil conditioning. Remove during grading operation all stones over 1-inch in greatest dimension and excess soil.

3. Earthwork and Topsoil Placement: Shall include excavation and backfilling for the irrigation system and the preparation for the spreading, densification, cultivation and raking of topsoil, including fertilization and conditioning.

4. In Previously Paved Areas: After removing the pavement and base, remove the top 6-inches of existing soil and dispose of off the site. Replace with an approved Imported/Class A topsoil in accordance with Subsection 2.1(A)1 to the indicated finish grade.

B. Conservation Of Topsoil:

1. For Unclassified/Class C topsoil acceptable by City Engineer as topsoil, maintain the topsoil stockpile in a manner in which will not obstruct the natural flow of drainage.

2. Maintain the stockpiled topsoil free from debris and trash, and contamination.

3. Keep the sampled or tested stockpiled top soil from other top soil. The Contractor shall re-test any mixed top soil at no additional cost to the City.

4. Keep the stockpiled topsoil damp to prevent dust and drying out.

C. Topsoil Preparation and Conditioning:

1. Type and Thickness: Place approved Imported/Class topsoil over the entire rough graded site, in accordance with Subsection 2.1(A), to an approximate depth, as recommended by the City Engineer or as indicated on the Contract Drawings.

2. Do not work topsoil when it is so wet as to cause excessive compaction or forming of hard clods, or so dry as to cause dust.

3. Compact topsoil to 90 percent relative compaction prior to fertilizing conditioning. Add additional topsoil where required to achieve finish grades.

D. Fertilizing and Conditioning: Bring planting areas to finish grade including construction of landscape contour/ mounds before the spreading of specified fertilizer or soil conditioning materials and planting.

1. After approximate finished grades have been established, the upper 6 inches of top soil shall be conditioned and fertilized by means of mechanical tiller to the rate as specified on the drawings and the recommendations of the agricultural suitability and fertility analysis.

   The following organic, soil amendments and fertilizer rates, and quantities are to be used for bid basis only.

   a. Nitrogen-Stabilized (Type 1).

   b. Organic Soil Amendment): 6 cu yds per 1000 sq ft.

   c. Commercial Fertilizer (Ammonium).

   d. Phosphate 6/20/20): 15 lbs per 1000 sq ft.

   e. Agricultural Gypsum: 100 lbs. per 1000 sq. ft.

   f. Soil Sulfur: 20 lbs. per 1000 sq. ft.

   Final report shall provide amendment and fertilization recommendations for the specific plant materials list as shown on the contract drawings and reviewed the City Engineer. The Contractor shall comply with the reviewed recommendations without additional cost to the City.

2. The quantities of such materials required for planting areas shall be at the job site. Furnish the City Inspector with delivery tickets before spreading to verify the source, kind and quantities delivered. Furnish City Engineer duplicate copies of the material invoices as required in Subsection 1.2 (G).

3. After spreading of fertilizer and/or soil conditioning materials, uniformly cultivate such materials into the upper 6 inches of top soil using suitable equipment operated in at least two directions approximately at the right angles. Make the resulting soil friable.

E. Finish Grading:

1. Contractor shall verify with all Contract Drawings all areas receiving mulching. Contractor shall verify the amount of fertilizer and soil conditioning, and specified thickness of mulching to determine the finish grade. Make finish grade smooth, uniform and free of abrupt grade changes and depressions to insure proper surface drainage.

2. Finish grade below adjacent paving, curbs or headers shall be 1-inch in shrub or ground cover areas and 1-inch in lawn areas.

3. Water soil after spreading of fertilizer and/or soil conditioning materials, and allow it to settle to provide a stable surface. After the soil has dried out to a workable condition, regrade, rake and smooth to the required grades and contours. Finished surfaces to be clean and suitable for planting.

4. Finish grading shall insure proper drainage of site. Surface drainage shall be away from all building foundations at a minimum of 2 percent or in accordance grades shown on Contract Drawings.

5. Eliminate all erosion scars.

6. Install area drain(s) in the planting areas at locations indicated on Contract drawings.

F. Excavation and Trenching: When site is completed with soil conditioning and finish grading operations, all completed new planting pits and trenches shall be backfilled and reconditioned to the specified topsoil thickness.

G. Slope Stabilization and Erosion Control:

a. Required: All slopes greater than 2:1 slope ratio shall be protected with an approved erosion control netting. Install erosion control netting per manufacturer's recommendation. Submit the manufacturer's printed installation specifications to the City Engineer for review prior to start of work.

Unless otherwise specified, installation of jute netting shall conform with the following:

1. Attach jute mesh with wooden (deadman) stakes, minimum 18 inches in length (2x4 cut at an angle), or metal pins.

2. Position stakes approximately 3 feet apart (3 per square yard of fabric), domino pattern.

3. Drive stakes until all but 1 inch of crown is in the ground.

4. Overlap the fabric at least 18 inches in water flow direction.

5. Overlap edges minimum 8 inches, staking both edges securely.

6. Check slots with fabric buried at least 6 inches deep, shall be used every 25 feet in waterways or ditches.

7. The fabric shall be buried in anchor trenches of minimum 10 inches deep at the top and bottom ends of an installation to prevent undercutting of the fabric.

b. Topsoil Grading and Conditioning shall be in accordance with Subsection 3.4 - GRADING AND SITE PREPARATION herein, unless otherwise indicated.

H. HEADER BOARD INSTALLATION:

1. Wood Header Board:

a. Install at the location and grades shown on the Contract Drawing, prior to planting.

b. Locate stakes at spliced corners and at intervals not to exceed 4-feet and drive slightly below the top of the header.

c. Nail 1"x2"x24" long heart redwood splice plates centered on joints with four (4) 10d box nails to secure butt joints.

d. Provide a stake at a maximum of 2 feet at each side of splice.

e. Nail headers to stakes with two 16d (3 1/2-inch long x 8 gauge) cement coated common nails at each stake. Stagger nails and clench protruding ends down.

2. Plastic Header Board: Stake header 4 feet on center maximum and at turns and curves. Use 2 – 3 -inch aluminum deck screws (two per stake). Provide a 2" x 6" x 24" plastic wood splice board for connection between boards with a stake at a maximum of 18" at each side of splice. Secure splice board to header board with 12 each 3" aluminum screws. Allow for thermal expansion for leaving gaps in joints or at end of runs. Crown maximum shall be 16 inches per 20 feet.

3.5 WEED/PEST CONTROL

A. Unless specified otherwise, weed abatement shall apply to all planting areas. The abatement operation shall commence before planting but only after removals, grading, hardscape construction, installation of irrigation system, soil preparation, and fine grading of planting areas have been completed.

B. All herbicides for weed control shall be applied with a photosensitive dye which will produce a contrasting color when sprayed upon the ground. The dye shall be applied in a manner so as not to leave any stain upon surfaces.

C. Pesticides, as required, shall be applied by a licensed pest control applicator in accordance with the requirements of the California Food and Agricultural Code and Section 02310 – EARTHWORK specified herein. Within 90 days after the Notice-To-Proceed, a copy of the proposed application program shall be submitted to the City Engineer for review. The submittal shall include, but not be limited to the pesticides to be used, rates of application, methods of application, and areas to which pesticides are to be applied. Prior to commencement of application, the licensed pest control adviser must receive the City Engineer's approval of the program. The Contractor shall abide by all laws and codes governing weed abatement operations including but not limited to CAL-OSHA requirements and the State of California Healthy Schools Act of 2000 (AB2260).

D. Contractor shall notify the City Engineer a minimum of 72 hours prior to each application of pesticide/herbicide and shall indicate the hours during which the application will occur. No applications shall be made on Saturdays, Sundays, or legal holidays, unless otherwise prior approval by the City Engineer in writing.

E. Contractor responsibility during weed abatement operation and herbicide application shall include but not be limited to the following:

1. 72 hour written notice to the recreation director-in-charge, park and childcare patrons.

2. Submittal of a "Pest Control Recommendation Form" to the City Engineer.

3. A completed and accurate MSDS (Material Safety Data Sheet) shall be posted on the site of application, and the area of application shall be posted as such.

4. The application area shall be barricaded for public safety and appropriate signage, labels and warnings posted,

5. For sites over 1/2 acre in area, the contractor shall utilize a City Engineer approved plan of phasing the application. The plan shall be pre-approved by the City Engineer.

E. Any Contractor who is obligated under contract with the Department of Recreation and Parks for the construction or refurbishment of a park facility that involves the intended use of herbicides or other pesticides, must first notify the Pest Management Supervisor of the Forestry Division prior to any approved pesticide applications at any recreation/child care center. All pest control work performed at any facility shall fall within the guidelines of the Departments of Recreation and Parks IPM programs. In addition, each individual project will require a written recommendation by a licensed Pest Control Advisor for any pesticide applications.

Any questions regarding pesticide application and procedures at Recreation and Parks facilities shall be directed to the City Engineer and the RAP Forestry Group, Vegetative Management (213) 485-4826.

F. The following precautions shall be observed in handling and applying herbicides:

1. Before applying, the Contractor shall read and understand all instructions provided by the manufacturer.

2. Herbicidal product shall not be used when winds are gusty or in excess of 8 miles per hour, or when any other conditions exist which would result in drift.

3. Avoid combinations of pressure and nozzle type or adjustment that result in mist.

4. Do not apply during rain, or if rain is forecast within twelve hours. If rain occurs within a twelve-hour period, material must be reapplied after plant growth has dried out.

5. Contractor shall observe extreme care not to allow spray to contact desirable plant material. Use cardboard, plywood, or other appropriate material to shield plant materials outside of the treatment area from overspray.

6. Do not apply to bare ground.

7. Do not add other products to any herbicide mix, including spreader, stickers, or surfactants, unless required by the label directions and pre-approved by the Department of Recreation & Parks Pest Control Advisor (PCA)

G. The Contractor shall adhere to the following "Grow and Kill" methods:

Step 1. Clear site of all dead or living vegetative growth by hand or mechanical means.

Step 2. Thoroughly water all turf and planting areas daily to keep soil evenly moist for a period of at least two weeks.

Step 3. At the conclusion of the growth period, treat all plants within the treatment area with Roundup at an application rate of four (4) quarts of Roundup mixed in 50 gallons of clean water per acre applied by spraying. Thoroughly moisten all plant material with herbicide. If nutsedge (nutgrass) is present in any of the planting areas, "Manage" is recommended for control at a rate of 0.9. per gallon of water. Furthermore, the use of "Manage" requires the addition of 2 teaspoons (1/3 fluid ounce) of nonionic surfactant (No Foam A) to the mix.

Step 4. Do not water or otherwise disturb treated areas for a period of two (2) weeks.

Step 5. After the two-week kill period, remove all dead plants. If any living plants are observed, the entire plant, including roots, shall be removed by hand. Minimize physical disturbance of the soil.

H. New and/or existing plants which in the opinion of the City Engineer have been damaged by the application of pesticide/herbicide shall be replaced by the Contractor at their expense.

I. At the end of each work week, a written report of that week's applications of all pesticides/herbicides shall be submitted to the City Engineer.

J. Weed Suppression (Non-Hebicide Weed Removal) shall apply to all turf and planting areas. The suppression operation shall be commenced only after removals, grading, hardscape construction, installation of irrigation system, soil preparation, and fine grading of turf and planting areas have been completed. The contractor shall thoroughly water all turf and planting areas for a minimum period of two weeks prior to commencing removal. Contractor shall clear the site of all dead vegetation and living weeds by hand or mechanical means. All removed vegetation shall be properly disposed of off-site.

3.6 PLANTING

A. General: All plant materials, including plants previously approved at the nursery, shall be inspected prior to planting. The Contractor shall be responsible for the condition of all plants, planted or otherwise, until final acceptance by the City and termination of maintenance period. Contractor shall be obligated to honor all requirements of warranty as indicated herein.

1. Perform planting with materials and equipment according to procedures favorable to the optimum growth of the plant. Do not plant during windy conditions.

2. Except as noted for specimen planting, start all planting operations immediately following the completion and approval of the irrigation system.

B. Protection and Storage:

1. Keep all plant materials delivered to the job-site in a healthy condition for planting.

2. Do not allow plants to dry out.

3. Separate bare root stock and "heal in" in moist earth or other suitable material.

4. Cover the root ball of balled and burlapped plants with moist saw dust, wood chips, or other approved material.

C. Layout and Plant Locations:

1. Plant locations indicated on the Contract Drawings are approximate.

2. Plants may be re-spotted prior to planting as directed by the City Landscape Architect, without additional compensation to the Contractor.

3. Make a detailed layout of plants, etc., in the planting areas and obtain approval of the City Engineer prior to actual planting operations.

4. Locate the first row of plants in areas designated for on center spacing at one-half the designated spacing from the edge of the area.

5. Do not stretch the maximum specified spacing for each species shown on the plans.

6. Unless otherwise specified, all planting areas except lawn shall receive a minimum two (2) inch deep layer of tree chip mulch (Type 5 Organic soil amendment). Mulch shall be spread evenly throughout planting beds and tree watering basins. Do not bury ground cover.

D. Container Plants Backfill Mix:

1. Unless specified otherwise or required by the agricultural suitability and fertility analysis, container plants shall be backfilled with:

   a. 6 parts by volume on-site soil.

   c. 4 parts by volume Type 1 Organic Soil Amendment.

   d. Slow release commercial fertilizer at the rate of 1 lb per gallon of container size or 1 lb. per 4" of box size.

   e. Broadleaf P-4 water holding polymer at the rate of 1 oz. per foot of rootball diameter.

   f. 8-8-4 Commercial 20-10-5, 21 gram fertilizer planting tablets with the following application rates:

Container Size	
1 gallon	= 1 tablet
5 gallon	= 2 tablets
15 gallon	= 6 tablets
Larger than 15 gallon size	= 2 tablets per half inch of trunk diameter.

2. All plants which settle deeper than specified above shall be raised to the correct level. After the plant has been placed, additional backfill shall be added to the hole to cover approximately one-half the height of the root ball. At this stage, water shall be added to the top of the partly filled hole to thoroughly saturate the root ball and adjacent soil.

3. The remainder of the hole shall be backfilled.

4. If planting tablets are used, they shall be set with each plant on the top of the root ball while plants are still in their containers so the required number of tablets to be used in each hole can be verified. After verification insert tablets 3" below the surface into the backfill mix spaced evenly around the plant.

5. Unless otherwise specified planting tablets shall not be used with California Native species.

E. Specimen Planting: When in close proximity to irrigation lines, plants in boxes (24-inches or larger) shall be planted before installation of lateral irrigation lines. Re-route irrigation lines in conflict with specimen plant locations to clear the root ball.

F. Tree and Shrub Planting:

1. Make planting holes approximately square with vertical sides the depth of the plant container and twice the width of the plant container or root ball and larger if necessary to permit handling and planting without injury to the root system. Install the root barrier where indicated on the Contract Drawings in accordance with the details and/or the manufacturer's recommendations.

2. Do not plant plants with a broken or cracked root ball.

3. Open and remove plant containers in such a manner that the plant root is not injured.

4. Scarify native soil at the bottom of planting holes.

5. After "water settling" the bottom half of the planting hole, set the plant approximately in the center of the planting hole and adjust the root crown flush to finish grade.

6. Backfill balance of the planting hole with the specific backfill mix and fertilizer and "water settle".

7. Prune or remove any broken or damaged minor limbs. Any major damage to plant material shall be brought to the attention the City Engineer or authorized representative for evaluation.

8. Form a circular watering basin slightly larger than the planting hole; 6-inches high for trees and 3-inches high for shrubs. Make the bottom of the basin at surrounding finish grade. Water basin berms located in lawn areas shall be removed at the end of the maintenance period.

10. Restore the area around the plants to finish grade and dispose of excess soil.

11. After planting, plants shall be plumb with the root crown at its natural depth with respect to finish grade.

12. Tree Edging: Where trees are planted in lawn area, a minimum 3-foot diameter circle around each tree shall be maintained free of lawn area to avoid the growth-reducing effects of lawn area on trees. Mulch or compatible plants shall be used in the circle. This circle shall be kept clear of lawn area by the Contractor for the duration of the maintenance period.

H. Lawn Planting: Complete site preparation; apply weed and pest control and the fine grading before planting the lawn.

1. Sod Planting: The type of sod and the area to be sodded shall be in accordance with the Contract Drawings. Sod shall be machine cut to between 1/4" and 5/8" thick, not including top growth or thatch.

   a. Site shall be fine-graded to the specified thickness of the sod below finish grades. Soil conditioning and fine grading shall be completed before sodding. No heavy equipment shall operate over the site after grading is completed.

b. The site shall be moist but not wet when sod is laid. Sod shall be laid with closely fitted joints, and the ends of the strips shall be staggered forming a running bond pattern. Openings shall be plugged with sod or topsoil. Within 2 hours after installing sod and before rolling, the sod shall be lightly irrigated. All seams and joints shall then be rolled with a minimum 300 lb. water ballast roller until the sod is well bonded to the subgrade.

c. The areas shall then be watered thoroughly to penetrate the subsoil at least 8 inches. Watering shall be repeated as necessary to keep the sod moist until rooted into the subgrade. Sodded areas shall be protected against foot traffic until the sod is well established.

2. Lawn Repair: All trenches shall be fully compacted and the grade brought flush with the adjacent undisturbed finish grade. This repair shall include areas where irrigation or other piping trenches, conduit trenches or where equipment has damaged the existing lawn. Lawn repair shall be accomplished using "Method A" or existing sod, shall be carefully cut removed and reused to sod trenches after backfilling and densification. Contractor shall use seed/sod to match existing lawn type in areas being repaired unless directed otherwise by the City Engineer.

I. Ground Cover and Vine Planting:

1. Complete site preparation, fertilization and conditioning and fine grading; apply weed and pest control and moisten the planting area prior to planting.

2. Plant in moist soil, spaced as indicated on the Contract Drawings.

3. Plant each plant with its proportionate amount of flat soil to minimize root disturbance.

4. The degree of soil moisture in the flat shall be such that the soil does not crumble when removing plants.

5. Following planting of ground cover, spread over entire site with 1 1/2-inch thick Type 5 Organic Soil Amendment.

6. Restore finish grade to insure proper surface drainage.

J. Hydroseeded Groundcover:

1. Time of Year to Seed and Hydroseed: Contractor to verify time of year for seed to be sown according to seed mix supplier specifications.

2. Seeding at any time other than within specified seasons shall be allowed only when the Contractor submits a written request for permission to do so and permission is granted. In the request, the Contractor must agree to apply the specified seed at a rate of not less than 25 percent greater per unit area than the rates specified for use within the seeding season. The additional materials shall also be furnished and placed at the Contractor's expense. The Contractor must also agree to reseed, re-mulch and repair any areas seeded out-of-season which fails to wind, erosion, lack of germination and/or disturbance by the Contractor.

3. Erosion Blanket: Areas requiring erosion blanket are designated on the Drawings and are generally on slopes of 1 1/2:1 or greater. The blanket must be placed no later then 24 hours after seeding. The material shall be applied smoothly but loosely on the soil surface without stretching. The upslope end of each piece of blanket shall be buried in a narrow trench six inches deep. After the blanket is buried, the trench should be tamped firmly closed.

4. In cases where one roll of blanket ends and a second roll starts, the upslope piece should be brought over the buried end of the second roll so that there is a twelve (12) inch overlap to form a junction slot.

5. Overlaps of blanket which run down the slope, outside edges and center, shall be stapled on two-foot intervals. Each width of jute mesh shall have a row of staples down the center as well as along the edge. Check slots and junction slots will be stapled across at six-inch intervals.

K. Planting in Sloped Area or Area Requiring Stabilization and Erosion Control: In accordance with details indicated on the Contract Drawing.

L. Transplanting of Existing Plant Materials: In accordance with current horticultural practices.

1. Box or ball root system as necessary to maintain plant materials in a healthy, growing condition.

2. The Contractor shall guarantee the transplanted plant materials for an extended period of one year from the date of completion of the maintenance period.

3. The Contractor may furnish the equivalent size and kind of plant material, in lieu of transplanting such item.

4. Should the transplanted or in lieu item die within the one-year guarantee period, it shall be replaced with an equivalent size and type plant without an added expense to the City.

3.7 PLANT STAKING AND GUYING

A. Tree Staking: Unless specified otherwise, double tree staking shall be used. Stake trees with or wood lodgepole materials as indicated on the Drawings.

1. Install stakes vertically on the windward side of the tree. Position the stake at least 6-inch from the trunk at ground level and 30-inches into the soil in a manner to avoid injury to the roots or breaking the root ball.

2. Secure plant trunk to the stake with two ties; one just below the head of the tree and one half way between finish grade and the top tie.

3. Make tie loop 1-inch greater in diameter than the trunk.

4. Attach tie to wooden stake with one furring nail at the tie locations described above. Attach tie to metal stakes through 1/4-inch hole drilled at tie locations.

5. Secure wire ties by twisting the ends.

6. In parkways, locate the stake on the side away from the roadway.

3.8 MAINTENANCE AND PLANT ESTABLISHMENT

A. General Maintenance: Maintain all areas on a continuous basis as they are completed during the progress of the work and during the establishment period. Continue to maintain the area of work until final acceptance of the Contract by the City. Maintenance shall include continuous operations of picking up trash and emptying trash cans daily, watering, weeding (including all broad leaf weeds in lawn areas), trimming, mowing, rolling, edging, cultivation, fertilization, spraying, control of pests, insects and rodents, reseeding, plant replacement (irrespective of cause) or any other operations necessary to assure normal plant growth. Any malfunctions of, or damage to the irrigation system caused by the Contractor in the execution of his work shall be repaired within 24 hours. The Contractor is responsible for keeping all plant material sufficiently watered during any irrigation failures.

B. Plant Establishment:

1. Request a final inspection to begin the plant establishment and maintenance period after all planting and related work have been completed in accordance with the Contract Documents.

2. After planting is completed and approved, a field notification will be issued to the Contractor to establish the effective beginning date of the plant establishment period.

3. The City Engineer may extend the plant establishment period if the planted areas are improperly maintained, or if appreciable plant replacement is required, or other corrective work becomes necessary.

   The plant establishment period for all plants with the exception of trees shall be for the duration of 120 calendar days. The plant establishment period for all trees shall be for the duration of one (1) year.

4. Plant Establishment is considered as part of the contract works and paid for in accordance with Section 37 - PAYMENTS of the General Conditions. The Plant Establishment consists of:

   a. Maintenance of planting, including watering, plant replacement, weed and pest control, pruning/edging, fertilization and any other conservation tasks to assure the standard rate of healthy growth and project aesthetics.

   b. Maintenance of irrigation systems.

   c. Daily Site clean-up which includes, but is not limited to trash pick-up, clearing of catch basins, and sweeping of walks.

   d. Maintain safe conditions.

e. Perform other work as determined necessary by the City Engineer as specified in these Specifications.

f. Keep all seeded and planted areas moist during the establishment period. If irrigation system is not available provide whatever watering systems is necessary to provide adequate watering during the establishment period without causing erosion detrimental to the planting area. Water all plants immediately after planting.

5. Contractor shall submit the form entitled MONTHLY MAINTENANCE SCHEDULE. They shall provide unit cost for all tasks proposed. Form shall be standard type used in the industry and completed to meet the intent of the plant establishment. This form establishes a reasonable minimum of services for plant establishment and it shall remain the responsibility of the Contractor to provide the necessary services beyond that minimum for situations due to his performance or lack thereof, to establish the plant materials in situations prior to acceptance of the Contract by the City Engineer.

6. If approved by the City Engineer, the Contractor, at their expense, may use plants of a larger container size than those originally specified for replacement plants during the first sixty (60) working days of the plant establishment period. All replacement plants are subject to the same inspection requirements set forth in these specification for original plant installation.

7. After one year of the plant establishment period have been completed, replacement of plants, except for ground cover plants shall be:

1-gallon	for seeded, pot, and liner-size plants.
5-gallon	for 1-gallon size plants.
15-gallon	for 5-gallon size plants.
24-inch box	for 15-gallon size plants.

8. Not more than twenty (20) working days prior to completion of the plant establishment period, the Contractor shall apply one application of herbicide conforming to the provisions under "Weed/Pest Control" of this Section or elsewhere in the Project Manual.

9. During the plant establishment period, damage caused by erosion shall be repaired.

10. Reconditioning*:* At thirty (30) day intervals after planting, apply all purpose (8-8-4) commercial fertilizer at the rate of 20 lbs per 1,000 square feet of the planted area or as per recommendations of the Agricultural Sustainability and Fertility Analysis. Thoroughly water the area after applying fertilizer. All fertilizer applications shall be done under the inspection of the City Engineer or authorized representative. Reconditioning shall be applied to trees, shrubs, vines, and ground cover areas as specified within the Project Manual. The Contractor shall notify the City Engineer at least five (5) days prior to applying each application of commercial fertilizer. At five (5) weeks after lawn seeding the Contractor shall apply a slow release 38-0-0 granular fertilizer at a rate of 15 pounds per 1000 sq. ft. to all lawn areas.

11. Basins and basin walls shall be kept well-formed and free of weeds.

12. Keep all planted areas free of weeds. Cultivate weekly at intervals not to exceed ten (10) days.

13. Trees and shrubs shall be healthy and vigorous at the completion of the maintenance period. Broken or vandalized tree stakes shall be repaired to a condition as initially installed within seven (7) days.

14. Plants shall be kept watered and unsuitable plants shall be replaced.

15. During the plant establishment period, the automatic irrigation system shall be operated in the automatic mode, unless otherwise permitted by the City Engineer. When any automatic irrigation component is operated manually on a working day, that day will not be credited as a plant establishment working day unless the manual operation has been permitted in writing by the City Engineer.

17. Prior to the beginning of the plant establishment period, the Contractor shall submit for approval of the City Engineer, a proposed watering schedule program for each irrigation during and after the plant establishment period. The schedules shall be based upon an annual cycle and precipitation indicated below and the watering schedule indicated on Contract Drawings. Contractor shall follow the watering schedule closely and shall not deviate from the schedule without the approval from the City Engineer. The submitted schedule shall provide the watering times for each valve or station for different time periods.

Average Monthly Precipitation

March, April, May	1.47 inches
June, July, August	0.10 inches
Sept., Oct., Nov.	0.74 inches
Dec., Jan., Feb.	3.32 inches

Actual monthly precipitation rates

January	3.25 inches
February	3.55 inches
March	2.63 inches
April	1.47 inches
May	0.32 inches
June	0.08 inches
July	0.07 inches
August	0.15 inches
September	0.25 inches
October	0.67 inches
November	1.27 inches
December	3.17 inches

This requirement is superseded if a DWP approved "Smart Controller is installed with soil sensor, ET sensor or real-time link to weather station based on ET data. Submit controller specifications to City Engineer for approval.

18. Upon completion of the plant establishment, Contractor shall submit the Final Watering schedule encased in hermetically sealed plastic. It shall be permanently attached by a short chain to the inside of the controller.

19. A Contractors representative who is competent in operating the irrigation controller(s) shall be present at the job-site when watering is in progress.

20. As part of the plant establishment period, thirty (30) days prior to a completion of the plant establishment period, written instruction shall be submitted to the City Engineer by a qualified person from the Contractor's personnel on the use and adjustment of the irrigation controller installed.

21. The approved written instructions by the City Engineer on the use and adjustment of the installed automatic controllers shall be performed and the approved watering schedule program shall be implemented within the last ten (10) working days of the plant establishment period. Such programming shall not relieve the Contractor of his responsibility to apply sufficient water as conditions may require to keep the soil and plant roots moist.

22. Weeds in all areas of the plants shall be controlled as specified herein or as directed by the City Engineer.

23. Surplus earth, papers, trash, and debris, within planting areas shall be removed and disposed of off-site. Such disposal shall conform to governmental regulations of all agencies having jurisdiction at the disposal site.

24. During the plant establishment period, any plant material shall be pruned by the Contractor at his expense, when directed to do so by the City Engineer.

C. Lawn Maintenance:

1. Perform the first mowing of lawn areas when the grass is 2-1/2 inches high and repeat as often as is necessary to maintain the lawn at a height of 1-1/2 inches. In no case shall the lawn be cut lower than 1-1/2 inches in height or allowed to grow higher than 3" unless indicated otherwise. The lawn shall be mowed a minimum of 2 times during the maintenance period.

2. After each cutting, the edge of the grass shall be trimmed to a neat and uniform line. Where trees occur in lawn areas, the grass shall be removed and neatly edged 18 inches away from the trees.

3. All grass clippings shall be collected and removed from the job site and the entire project shall be so cared for that a neat and clear condition will be presented at all times.

4. All lawn areas shall have 95 percent coverage with bare areas not exceeding three square inches.

D. Palm Maintenance: Maintenance will include weekly water management to include soil probing and observation of soil moisture sensing devices and palm tree pruning. Pruning shall be done with reciprocal saws (chain saws will not be allowed). Saw blades will be sterilized between each tree with fifty (50) percent household bleach and fifty (50) percent water for ten (10) minutes. Pruning will be done to maintain a neat appearance as approved by the City Engineer. Proposed pruning schedule will be submitted to the City Engineer for approval.

E. Pruning: The City Engineer will designate any required pruning of plants at the start of the plant establishment period. Perform the pruning as part of the plant establishment work.

F. Damage:

1. Replace as soon as possible plants that show signs of failure to grow at any time during the Contract period or those plants so injured or damaged so as to render them unsuitable for the purpose intended, at no additional cost to the City.

   Provide replacement plants of the same type and size to match adjacent plants. New plants shall be inspected at the source, prior to the delivery. Furnish plant and fertilizer as specified. New plantings shall be subject to a new 90 days establishment period and guarantee specified herein.

2. Damage to planting areas shall be repaired immediately.

   Depressions caused by vehicles or foot traffic shall be filled with topsoil and leveled.

G. Final Inspection/Final Acceptance:

1. Upon completion of the plant establishment period, a final inspection for acceptance will be performed by the City Inspector and City Engineer or authorized representative. The Contractor shall request for inspection at least three (3) working days prior to the anticipated date. For this inspection, the site must be thoroughly cleared of all debris and excess material removed. If work fails to pass final inspection, any subsequent inspection must be rescheduled as per above, and will be charged to the Contractor.

2. If the plant establishment period is satisfactorily completed ahead of other work included in the Contract, the plants establishment shall be extended and shall be the responsibility of the Contractor until all other work has been completed and accepted by the City.

3.9 GUARANTEE

A. General: Guarantee the performance of maintenance and the life of all trees for a period of one year from the date of acceptance of the contract. Guarantee all shrubs for a period of six (6) months from the date of acceptance of the Contract.

B. Deficiencies: Should any deficiencies develop within the specified guarantee period, correct such deficiencies to the full satisfaction of the City Engineer without added expense to the City. All replacement plants shall be subject to a new guarantee for a period as described herein above.

C. Prior to project acceptance and the release of final payment and project retention can be made, Contractor shall provide guaranty faithful performance bonds to guarantee the performance of maintenance service specified herein and to conform with the guarantee provisions herein and in Section 28 – GUARANTY-WARRANTY. The amounts of bonds required shall be 1/2 percent of the Total Contract Price or $10,000 whichever is greater for a period of one year. This amount shall continue in full force and effect for the duration of the plant establishment period and the duration of the guaranty and warranty period.

3.10 FINAL CLEAN-UP

A. Required: Comply with provisions of Section 01740 – REMOVAL, CLEANUP AND DEMOBILIZATION of the GENERAL REQUIREMENTS. Upon completion of all landscape work and before final acceptance, remove all tools, surplus materials, apparatus, debris, weeds and exterminate rodents from the job-site. Leave the job-site in a neat, clean condition, acceptable to the City Inspector. Wash, clean and leave all paved areas without stains.

END OF SECTION

(SEE ATTACHMENT)

ATTACHMENTS TO SECTION 02900

Attachments to Technical Specifications Section 02900 consist of one (1) document, as follows:

ATTACHMENT NUMBER	TITLE OF ATTACHMENT	NUMBER OF PAGES IN THIS ATTACHMENT
02900-A1	Tree Protection Specifications	4

THIS PAGE INTENTIONALLY LEFT BLANK

TREE PROTECTION SPECIFICATIONS

1.01 TREE PROTECTION

I. All trees that occur within the area of work, as shown on the plans, and not specifically designated for removal, shall be protected by the following means:

A. **Determining the Tree Protection Zone (TPZ)** - The **radius** (not the diameter) of the TPZ, measured from the outside of the tree trunk, shall be calculated by Recreation and Parks (RAP) Forestry according to the following:

1. **Single trunk trees -** multiply the trunk diameter in inches, measured 4.5' above grade, by 1.5 feet.
2. **Multi trunk trees -** multiply the sum of the diameters of all trunks in inches, measured 4.5' above grade, by 1.5 feet.
3. **Palm trees -** 5' from the base of the trunk.

B. Once determined, the TPZ is to be clearly shown on all plans, including concept plans, for discussion purposes, including at the RAP Capital Improvements Meetings.

C. Beyond the TPZ, the contractor shall also be responsible for protecting all trees within the boundaries of the construction zone, including vehicular access areas leading to the construction zone, lay down areas, and any other areas impacted by construction activities. Any damage to trees in these areas shall also be subject to the same monetary or replacement requirements specified in Section II below. Any necessary root cutting in this area must be confirmed with either the RAP or other approved arborist. See also the General Conditions for any damage done by the contractor to landscaping or other park amenities that fall outside the boundaries of the construction zone.

D. Within the boundaries of the construction zone (including the TPZ), the contractor shall be responsible for mitigating construction-related dust accumulation on all trees by spraying the trunks, limbs, and foliage with water to a maximum height of 30 feet during the months of April through November, at monthly intervals.

E. Within the TPZ, the contractor shall adhere to the following requirements, including, but not limited to:

1. No stockpiling or storage of any material, debris, or soil.
2. No storage of any construction equipment.
3. No vehicular access.
4. No cutting of roots.
5. No disturbance of soil or grade changes.
6. No objects of any kind to be attached to tree trunks.

F. The contractor shall install a 5' high temporary chain link fence with one pedestrian access gate along the boundary of the TPZ. See *5' HIGH TREE PROTECTION FENCE* detail at the end of the document.

G. The contractor shall provide one sign per each 20 lineal ft. of fence bordering the TPZ indicating that fencing shall not be removed. See sign detail that is included as part of the temporary chain link detail.

H. No work is permitted within the TPZ without the approval of each of the following: 1) the project landscape architect, 2) the project manager, and 3) RAP Forestry staff. Any work authorized within the TPZ must be done in accordance with the recommendations of a RAP arborist and under the supervision of a Monitoring Arborist. A Monitoring Arborist must be: 1) an ISA Certified Arborist or a Registered Consulting Arborist, with verifiable experience in protecting trees during construction; 2) approved by RAP Forestry. The Monitoring Arborist shall be hired and paid by the contractor.

I. Irrigation to all trees not specifically designated for removal shall be kept in operation for the duration of the project. Contractor shall be responsible for hand watering all impacted trees if necessitated by temporary shutdowns to existing irrigation systems. Trees are to be irrigated deeply and infrequently so that soil moisture is detectable at a minimum depth of 18" using a soil probe.

J. Upon job completion, contractor shall remove all items installed to protect trees during the construction process.

K. Any of the following Southern California native tree species fall under Ordinance No. 177404 of the Los Angeles Municipal Code:
   1. Oaks, including Valley Oak (*Quercus lobata)*, California Live Oak (*Quercus agrifolia)*, or any other tree of the oak genus indigenous to California but excluding Scrub Oak *(Quercus dumosa);*
   2. Southern California Black Walnut *(Juglans californica* var. c*alifornica);*
   3. Western Sycamore *(Platanus racemosa);*
   4. California Bay *(Umbellularia californica).*

   Contractor shall comply with the requirements of the ordinance found at: http://cityplanning.lacity.org/Code_Studies/Other/ProtectedTreeOrd.pdf.

II. Consequences of violating the Tree Protection Specifications:

A. ANY FAILURE BY THE CONTRACTOR TO ADHERE TO THE REQUIREMENTS SPECIFIED WITHIN THESE SPECIFICATIONS WILL RESULT IN THE SUSPENSION OF ALL CONSTRUCTION ACTIVITIES, TO BE DONE AT THE CONTRACTOR'S EXPENSE. THE CONTRACTOR SHALL BE RESPONSIBLE FOR PAYMENT FOR OR REPLACEMENT OF ANY TREES DAMAGED THROUGH NON-COMPLIANCE WITH THESE

SPECIFICATIONS. The choice of whether the damaged trees are replaced or paid for will be determined by RAP Forestry.

1. **Monetary valuations** for damaged trees will be determined by RAP Forestry.
2. **How RAP determines the quantity, species, and location of replacement trees:**
    a) Measuring the diameter of the tree(s) being replaced:
        1) For single trunk trees, the diameter (DBH) is measured 4.5’ above the ground.
        2) For multi-trunk trees, the DBH of each of the multiple trunks is measured 4.5’ above the ground, then all are summed to arrive at a single diameter value.
    b) The ratio of the sum of calipers (as defined by RAP Nursery Specifications) of new trees planted vs. the sum of the diameters of existing trees removed shall be at least 1:1. The specific number of replacement trees will be determined by RAP Forestry staff and the project landscape architect.
    c) If the replacement ratio cannot be achieved within the project boundaries, then one of the following shall apply:
        1) Deliver the trees to RAP Forestry.
        2) Deliver the trees to the nearest RAP service yard.
        3) Plant the trees beyond the project on an approved, area-wide basis.
    d) RAP Forestry staff and the project landscape architect shall determine the replacement tree species/planting location and shall also ensure the health/quality of the trees.

□□NC□N□ M□T□R□□□S

□ □OSTS: O□D□□□□N□ □OSTS □□□□□ □N□O□D□□OST S□□C□N□ TO B□ □□□□" M□□□□OSTS TO B□ DR□□□N □□B□□O□ R□□□T□□□ □R□D□□

□ H□N□ □S: □ND□STR□□ B□□□DO□ H□N□ □ □□□□ S□ □N□ □□H□N□ □S □□R □□T□□ON□ TO□ □ND ON□ BOTTOM□

□ □□BR□C: □ □ □□□ □ □□□ □N□M□SH□KN□CK□□ TO□ □ND BOTTOM□□□□C□ ON O□T□R S□D□ O□ □OST□

□ □ □T□ □R□M□: S□D□S□□□□□" D□□

□ T□□ □ □R□S: □□ □ □□□ □ □T □□" O□C□

□OCK□B□□ C□ST □□□M□N□M □ORK □□TCH □OST TO□S M□□□□□B□□ □RON OR □R□SS□D ST□□□□

□ □OST TO□S M□□□□□B□□ □RON OR □R□SS□D ST□□□□

□ □□"□□□□" S□□N□□TT□CH □ □TH T□□ □ □R□S□S□□N TO B□ □RO□□D□D B□ R□□□S□□N TO B□ □ HT □□TT□RS R□D□S□□N TO B□ □□ M□□S TH□CK

□ □□T□

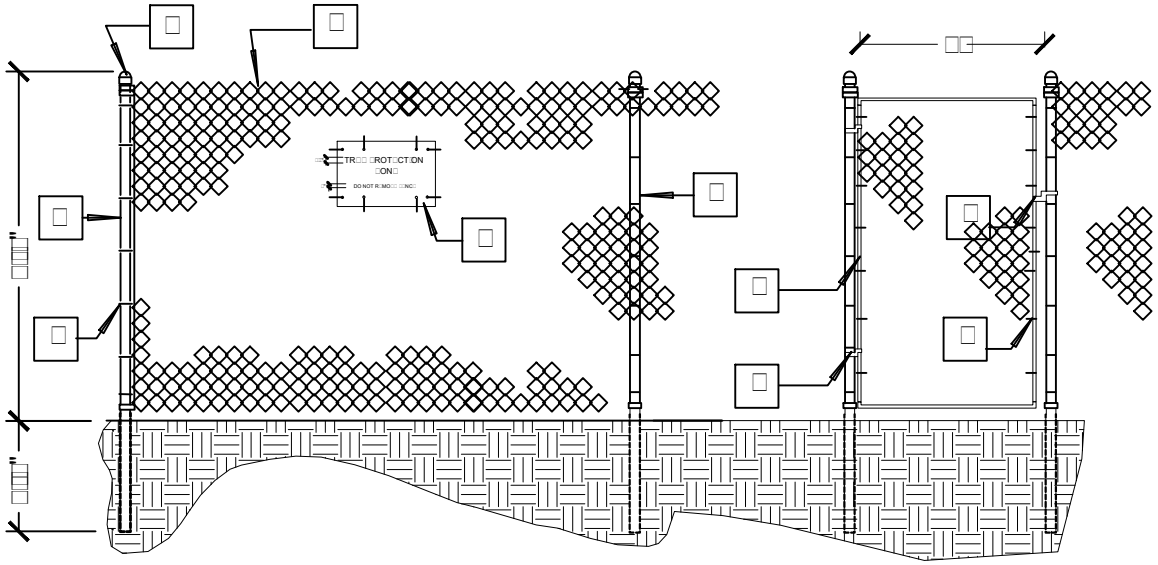

□□□□□T□ON

NOT□S:
□□ CH□□N □□NK □□NC□ M□T□R□□□S SH□□□ CON□ORM TO TH□ CH□□N □□NK □□NC□ □ND M□SC□□□□□N□O□S M□T□□ CONSTR□CT□ON S□CT□ON O□ TH□ NOT□C□ TO CONTR□CTORS□
□□ TH□ BOTTOM O□ TH□ □□BR□C SH□□□ B□ □OS□T□ON□D ON□ □NCH □BO□□ □□N□SH □R□D□□
□□ □RO□□D□ □OR ON□ □□□□ □D□ □ □T□ □□R □NC□OS□R□□
□□ □□□□ □□NC□N□ TO H□□□□ □ ST□ND□RD □ □□□□N□□□D □□N□SH

□R□DNO	□□H□□H TR□□ □ROT□CT□ON □□NC□	
N□T□S□	R□□□N□O	R□ D□T□□□ □□□□□□

SECTION 02930
LANDSCAPE MAINTENANCE

PART ONE - GENERAL

1.01 SCOPE

A. Section Includes: Furnish labor, material, equipment and services required to maintain the landscape in an attractive condition prior to and during the Maintenance and Plant Establishment Period as specified herein. The Maintenance and Plant Establishment Period shall continue for a period of 120 calendar days. After all work on the project is completed and approved, a field notification should be issued to the Contractor to establish the effective beginning date of the Maintenance and Plant Establishment Period. Maintenance should be to the satisfaction of the Architect.

B. Related work specified elsewhere includes but may not be limited to:

C. Landscape Irrigation - Section 02810.

D. Landscape Planting - Section 02900.

1.02 QUALITY ASSURANCE

A. Work Force: Contractor's representative shall be experienced in landscape maintenance and shall have received an education in ornamental horticulture.

1.03 MAINTENANCE AND WARRANTY

A. All landscape planting material and irrigation systems shall be maintained for 120 days and shall be warranted for one year by the Contractor. The warranty period and the maintenance period will officially start on the day after all work on the project is completed and approved, and a field notification is issued to the Contractor to establish the effective beginning date of the Maintenance and Plant Establishment Period. The Contractor shall maintain all complete work prior to that date.

B. Contractor shall contract with and pay for a landscape maintenance contractor who shall provide the following for all landscape planting material and irrigation systems:

1. Watering, weeding, caring for the plants, edging, spraying, pruning, and other activities required to keep the plant materials in a healthy growing condition and to keep the planted areas neat and attractive during the maintenance period.

2. Keep planted areas free of debris and weeds.

3. Apply fertilizer to all planting areas once every 2 months starting 60 days following beginning date of maintenance period.

C. Any plant material found to be dead or in poor condition and any irrigation piping or equipment found to be damaged or functioning improperly during the maintenance period shall be immediately replaced by the Contractor at no cost to the Owner. Material to be replaced within the warranty period shall be replaced by the Contractor within 10 calendar days after notification by the Architect. The Owner reserves the right to reject and replace the landscape maintenance crew at any time.

D. One week prior to the end of the required 120-day maintenance period, the Architect will review the project with the Contractor to verify acceptance before the maintenance period ends.

E. A punch list shall be issued by the Architect for corrections to the landscape work. A copy shall be sent to the Owner, the Owner's maintenance department, and the Contractor. The maintenance period will not terminate until all punch list items are corrected. Maintenance period termination to verified by the Owner.

F. Extension of the Maintenance and Plant Establishment Period: The Maintenance and Plant Establishment Period should continue at no additional cost to the Owner, until any noted deficiencies have been corrected and until final acceptance by the Architect, the maintenance period should re-start for replaced materials.

G. Landscape Lighting: All work and materials shall be guaranteed for a period of one year from the date of final acceptance.

PART TWO - PRODUCTS

2.01 MATERIALS

A. Materials used shall conform to Landscape Planting specifications in other sections or shall otherwise be acceptable to the Owner. Deliver to the Owner monthly record of all herbicides, insecticides and disease control chemicals used.

B. Unless otherwise noted in the Agronomic Soils Report, top dress fertilizer shall consist of the following percentages by weight and shall be mixed by a commercial fertilizer supplier.

C. 7% nitrogen.

D. 7% phosphoric acid.

E. 2% potash.

PART THREE - EXECUTION

3.01 MAINTENANCE

A. Maintenance shall be according to the following standards:

1. Keep areas free of debris and planted areas cultivated at intervals of not more than ten days. Watering, edging, trimming, fertilization, spraying and pest control, as may be required, shall be included in the maintenance permit. Street gutters shall be included within the debris/situation removal program. Keep area drains and pipe free of silt and debris.

2. Maintain adequate protection of the project. Repair damaged areas at Contractor's expense.

3.02 TREE AND SHRUB CARE

A. Watering: Maintain a large enough water basin around plants so that enough water can be applied to establish moisture throughout the major root zone. When hand-watering,

use a water wand to break the water force. Maintain mulches to reduce evaporation and frequency of watering.

B. Pruning Trees:

1. Prune trees selectively to provide the following characteristics:

    a. To allow development of permanent scaffold branches that are smaller in diameter than the trunk or branch to which they are attached, and which have a vertical spacing of 18" to 24", with radial orientation and do not overlay one another.

    b. Eliminate narrow V-shaped branch forks which lack strength.

    c. Thin out crowns to reduce topping and wind damage.

    d. As necessary to maintain growth within space limitations.

    e. As necessary to maintain natural appearance, and to balance the crown with roots.

C. Pruning Shrubs:

1. The objectives of shrub pruning are the same as for trees. Do not clip shrubs into balled or boxed forms unless such is required by the design and directed by the Owner.

2. Make pruning cuts at lateral branches or buds or flush with the trunk. "Stubbing" will not be permitted.

D. Staking and Guying: Remove stakes and guys as soon as they are no longer needed. Periodically inspect stakes to prevent girdling or rubbing that may cause bark wounds. Replace broken stakes and ties with specified materials.

E. Weed Control:

1. Control weeds by manual means only.

2. All areas between trees shall be weed free.

3. Use only recommended and legally approved herbicides to control weed growth.

4. Avoid frequent soil cultivation that destroys shallow roots and breaks the seal of pre-emergent herbicides.

5. Keep basins and areas between plants free of weeds. Use mulches to help prevent weed seed germination.

B. Insect and Disease Control: Maintain a reasonable control with approved materials.

C. Fertilization:

1. Fertilize plantings with the following or as noted in project Soils Report:

    a. At the end of the first 60-day interval apply 5 lbs. per 1,000 square feet of top dress fertilizer.

b. Apply specified fertilizer at 60-day intervals until the end of the 120-day maintenance period.

c. After application, water fertilizer down thoroughly.

d. Maintenance fertilizer shall consist of the following percentages by weight and shall be mixed by a commercial fertilizer supplier: Ammonia Nitrate: 34% nitrogen, 0% phosphoric acid, 0% potash, unless otherwise noted in a project soils report.

2. Avoid applying fertilizer to the root ball or base of main stem; rather, spread evenly under plant to drip line.

D. Replacement of Plants: Replace dead, dying or missing plants with plants of a size, condition and variety acceptable to Owner at Contractor's expense.

3.03 GROUND COVER CARE

A. Weed Control: Control weeds with chemical systemic spray or by mechanical means to prevent damage to planted materials.

B. Watering: Water enough that moisture penetrates throughout root zone and only as frequently as necessary to maintain healthy growth.

C. Fertilizing: Fertilize as specified under tree and shrub care.

D. Remove trash weekly.

E. Prune ground cover in a naturalistic fashion to keep in bounds and trim top growth as necessary to achieve an overall neat appearance.

F. Replace dead and missing plants at Contractor's expense.

3.04 IRRIGATION SYSTEM

A. Check system weekly for proper operation and coverage. Lateral lines shall be flushed out after removing the last sprinkler head or two at each end of the lateral. Adjust heads as necessary for unimpeded full coverage.

B. Set and program automatic controllers for seasonal water requirements. Give Owner all keys to controllers and written instructions on how to turn off system in case of emergency.

C. Repair damages to irrigation system at Contractor's expense. Make repairs within one watering period.

3.05 LANDSCAPE LIGHTING SYSTEM

A. Clean all lenses twice a year.

B. Replace broken bases, spikes and fixtures.

C. Adjust fixtures as necessary for optimum performance.

3.06 DRAINS AND GRATES

A. Subsurface drains and catch basin grates shall be kept clear of leaves, litter and debris to ensure unimpeded passage of water. Drain lines shall be periodically flushed with clear water to avoid build-up of silt and debris.

3.07 CLEAN UP

A. Remove debris and trash and legally dispose of off-site.

3.08 SUBMITTALS

A. The field set of "As-Built" drawings should be available for review at the beginning of establishment site walk.

B. Prior to the date of the final walk-thorough, the Contractor shall acquire from the Architect approved reproducible prints and shall produce the final record from the job record set of all changes made to all plans during construction, label said prints "As-Builts" and deliver to the Architect and as required to any Local Agency. Prior to the date of final acceptance, the Contractor shall deliver the "Landscape and Irrigation Guarantee" as required. Said Guarantee shall be on the Contractor's letterhead and dated the scheduled final acceptance date.

END OF SECTION

THIS PAGE INTENTIONALLY LEFT BLANK

SECTION 02939
PLANT PROTECTION AND PRUNING

PART ONE - GENERAL

1.1 DESCRIPTION OF WORK

A. Protect existing plant material specified on the drawings during the duration of the construction period in a healthful state, free from damage or harm as the result of any work performed.

1.2 JOB CONDITIONS

A. Prior to construction of any nature on the site, Contractor shall call for a site meeting with the General Manager. The purpose of the meeting shall be to establish the conditions of all existing plant material to be preserved upon receipt of the site by the Contractor. Failure to call for said meeting implies acceptance by the Contractor of plant material to be preserved in its existing condition.

B. An irrigation system and/or quick coupler valve will be fully operational so that plant material can be regularly watered.

C. Coordinate and cooperate with other work to enable the work to proceed as rapidly and efficiently as possible.

1.3 WORK INCLUDED

A. The work of this section includes all labor, materials, equipment, transportation and services necessary to complete the work in this section as shown on the drawings and as specified herein, including but not necessarily limited to, the following:

1. Protection and welfare of all existing plant material within the Contract Limits which is noted to remain, including trimming, cabling, and repair of such plant material as necessary and all labor, materials and equipment necessary.

2. Perform all pruning operations.

3. Submit plant material maintenance plan before commencing landscape work for review by the General Manager.

1.4 RELATED WORK

A. Clearing and Grubbing. Section 02210.

B. Landscape Irrigation. Section 02810.

C. Landscape. Section 02900.

D. Maintenance. Section 02930.

1.5 DEFINITIONS

A. "Injury" is defined, without limitation, as any bruising, scarring, tearing, or breaking of roots, branches, or trunk.

B. "Dripline" is defined as the outermost limits of the tree or shrub canopy.

C. "Certified Arborist" is a consulting arborist certified by the International Society of Arboriculture.

1.6 QUALITY ASSURANCE

A. Reference Standards:

1. International Society of Arboriculture (ISA) "Guide for Plant Appraisal" prepared by the Council of Tree and Landscape Appraisers (CTLA).

2. "Cabling, Bracing and Guying Standards for Shade Trees", as published by the National Arborist Association (NAA), 174 TR 101, Bedford, New Hampshire.

B. Qualification of Workman:

1. Trimming and pruning of trees shall be performed only under the direction of a certified Arborist.

1.7 SUBMITTALS

A. Pruning materials.

B. Fencing materials.

C. Maintenance plan.

1.8 GUARANTEE

A. During the Guarantee to Repair Period specified in the General Conditions the Contractor shall be liable for damages to all trees covered by the provisions of this Section. Compensation to the Owner shall be as outlined in section 3.04.

B. Contractor will not be held responsible for damages due to vandalism or freak acts of nature during the guarantee period. Immediately report such conditions to the General Manager.

PART TWO - PRODUCTS

2.1 FENCING MATERIALS

A. Fencing-11 gauge galvanized 6' high chain-link fence with galvanized steel posts at 10' o.c. minimum.

2.2 PRUNING MATERIALS

A. Pruning materials shall be in accordance with current horticultural practices.

B. Pruning sterilant shall be Physan 20 Fertilome Type A, or diluted bleach.

PART THREE - EXECUTION

3.1 FENCING

A. Fencing-A continuous 6' high temporary chain-link fence will be erected around trees with a caliper of 4" or larger at the dripline, in order to prevent soil compaction, limb damage, or the accidental introduction of toxic materials into the root zone. Fence can be erected around groups of adjacent trees where possible. Otherwise, fence to be erected around individual tree.

B. The fence will be removed only at the end of construction, as approved by the General Manager.

3.2 PLANT MATERIAL PROTECTION

A. Provide protection for all plant materials designated to be retained. Contractor is responsible for replacing damaged plant life with approved equivalent.

B. New and existing plant materials shall not be allowed to deteriorate and shall be maintained in a healthy and vigorous condition during the course of construction and maintenance period.

C. During the course of construction the Contractor shall take all necessary precautions, as outlined herein, to protect existing plant materials to be preserved from injury and death. Protection shall be given to the roots, trunk, and foliage.

D. The Contractor shall conduct operations continually to completion, unless weather conditions are prohibitive.

E. Provide ample water supply of potable quality and sufficient quantity for all operations required under this Section.

F. Trees subject to the provisions of this Section, which have been injured, shall be repaired immediately by a certified Arborist. Repairs shall include removal of rough edges, sprung bark and severely injured branches as directed by the Arborist.

G. Necessary measures shall be taken to maintain healthy living conditions for existing plant materials to be preserved. Such measures shall include monthly washing of leaves for the removal of dust, regular irrigation, root feeding, etc.

H. Tree protection fencing shall be installed for the protection of existing trees to be preserved. No construction, demolition, or work of any nature will be allowed within the fenced area without prior written approval by the General Manager.

1. Approval by the General Manager for work within the fenced area shall not release the Contractor from any of the provisions specified herein for the protection of existing trees to be preserved.

2. During the course of construction of approved work within the fence area, no roots shall be cut without prior written approval by the General Manager.

I. During construction, the existing site surface drainage patterns shall not be altered within the area of the drip line of existing plant materials.

J. Contractor shall not alter the existing water table within the area of the drip line of existing plant materials.

K. Do not permit the following within the drip line of any existing tree or shrub to be preserved:

1. Storage or parking of automobiles or other vehicles.

2. Stockpiling of building materials, refuse or excavated materials.

3. Skinning or bruising of bark.

4. Use of trees as support posts, power poles, or signposts; anchorage for ropes, guy wires, or power lines; or other similar functions.

5. Dumping of poisonous materials on or around plant materials and roots. Such materials include but are not limited to paint, petroleum products, dirty water, or other deleterious materials.

6. Cutting roots by utility trenching, foundation digging; placement of curbs and trenches, and other miscellaneous excavation without prior written approval by the General Manager.

7. Damage to the trunk, limbs, or foliage caused by maneuvering vehicles or stacking material or equipment to close to the plant.

8. Compaction of the root area by movement of trucks or grading machines; storage of equipment, gravel, earth fill, or construction supplies; etc.

9. Excessive water or heat from equipment, utility line construction, or burning of trash under or near shrubs or trees.

10. Damage to root system from flooding, erosion, and excessive wetting and drying resulting from watering and other operations.

L. Excavation Around Trees:

1. Excavation within the drip lines of trees shall be done only where absolutely necessary, under the direction of a Certified Arborist and with prior approval from the General Manager.

2. Where trenching for utilities is required within driplines, tunneling under and around roots shall be by hand digging. Main lateral roots and taproots shall not be cut. Smaller roots that interfere with installation of new work may be cut with prior approval from certified Arborist.

3. Where excavation of new construction is required within drip line of trees, hand excavation shall be employed to minimize damage to root system. Roots shall be relocated in backfill areas wherever possible. If large, main lateral roots are encountered, they shall be exposed beyond excavation limits as required to bend, and relocate without breaking. If encountered immediately adjacent to location of new construction and relocation is not practical, roots shall be cut approximately 6 inches back from new construction under the direction of a certified Arborist.

4. Exposed roots shall not be allowed to dry out before permanent backfill is placed. Temporary earth cover shall be provided, or roots shall be packed with wet peat moss or four layers of wet, untreated burlap and temporarily supported and protected from damage until permanently relocated and covered with backfill. The cover over the roots shall be wetted to the point of runoff daily.

5. Branching structure shall be thinned in accordance with National Arborists Association "Pruning Standards and Principles" to balance loss of root system caused by damage or cutting of root system. Thinning shall not exceed 30 percent of existing branching structure.

3.3 TREE TRIMMING

A. A Certified Arborist, shall be engaged to direct removal of branches from trees if necessary to protect the health of the tree or if required to clear for construction.

B. In company with the General Manager, Owner and a certified Arborist, ascertain the limbs and roots which are to be trimmed. Clearly mark them to designate the approved point of cutting.

C. Dead and damaged trees that are determined by the Certified Arborist to be incapable of restoration to normal growth pattern shall be removed.

D. Cut evenly, using proper tools and skilled workmen, to achieve neat severance with the least possible damage to the tree.

E. In the case of root cuts, apply wet burlap or other protection, approved as noted herein, to prevent drying out, and maintain in a wet condition as long as necessary for temporary protection.

3.4 REPAIR COMPENSATION

A. Damage:

1. Damage to existing tree crowns or roots over 1" in diameter shall be immediately reported to the General Manager.

2. A Certified Arborist shall direct all repairs to trees. Repairs shall be made promptly after damage occurs to prevent progressive deterioration of damaged trees. Repairs shall be at the Contractor's expense.

B. Irreparable Damage: Any tree to be protected which is irreparably damaged owing to the Contractor's negligence or failure to provide adequate protection shall be compensated for in accordance with the following schedule of values using the "tree caliper" method (greatest trunk diameter, measured 18 inches above the ground):

1. For trees with diameters up to and including 6 inches, compensation shall be the actual cost of replacement with item similar in species, size, and shape, including:

a. Actual cost of item boxed out of the ground.

b. Transportation or delivery of boxed item to site.

c. Planting and staking.

d. Maintenance, including watering, fertilizing, pruning, pest control, and other care to bring replacement to same general condition of original item.

2. For trunks up to:

7".....$ 1,200
8"..... 1,700
9"..... 2,200
10"..... 2,600
11"..... 3,100
12"..... 3,600
13"..... 4,100
14"..... 4,600
15"..... 5,000
16"..... 5,500
17"..... 6,000
18" and over, add for each caliper inch.... $600

3.5 MAINTENANCE

A. Plant material will be maintained throughout the duration of the construction period in a healthful manner. Plant material identified which requires special pruning, insect control, fertilization or other remedial health action will be treated during this period. Methods and rates of pesticide and fertilizer application will be reviewed by the General Manager prior to approval.

B. Watering: Plant materials will be watered on a regular basis, at a rate consistent with their particular requirements. Verification of the proposed watering schedule shall be reviewed by the General Manager prior to commencement of the maintenance.

1. The maintenance of the plant materials shall comply with standard horticultural practice for the correct watering, fertilizing, pruning and spraying of the specimen boxed trees.

2. The maintenance and quality of the plant materials shall be subject to monthly checks. The dates of these checks shall be outlined in the General Manager field notification relating to the establishment of the plant maintenance period. Additional checks shall be scheduled as determined by the General Manager.

3. Contractor shall be responsible for performing periodic inspections of existing plant materials to be protected and relocated throughout the construction period, and submit written proposals to the General Manager for additional maintenance work as may be required to ensure the health and general well-being of the plant material. Contractor shall retain, at the direction of the General Manager additional specialists as may be required to perform this work.

C. Contractor shall keep plant material free from weeds and debris at all times.

3.6 FIELD QUALITY CONTROL

A. General: The Contractor guarantees the protection of all plant material included as part of this work, in a healthful manner during the duration of the construction period. Destruction of, or significant damage to, any or all of the plant materials to be protected, as determined by the General Manager, will result in compensation by the Contractor of 3-36" box trees, installed on the site, for each existing tree damaged.

END OF SECTION

THIS PAGE INTENTIONALLY LEFT BLANK

SECTION 02955
RESTORATION OF UNDERGROUND PIPING

PART 1 - GENERAL

1.1 DESCRIPTION

A. General:

1 This specification requires the CONTRACTOR to restore the integrity of the existing sanitary sewer by installing a new liner into an active sewer. This will include sewer cleaning, sewer debris removal and disposal, CCTV inspection services, laser profiling and sonar survey, pit construction, shoring, liner installation, annular grouting, reinstatement of all existing tie-ins, laterals, maintenance holes, and structures. The result is a new, watertight sewer that is fully and solidly secured in place inside the existing sewer.

2 The CONTRACTOR is advised that this sewer is approximately 25 years old, has varied corrosion and is likely to have offset joints and variations in alignment. Significant debris is also known to have accumulated including, but not limited to, such items as cement blocks, clay tile, portions of sewer line, aggregate, chunks of concrete, tree roots, pieces of pavement or curb and gutter, rocks, and organic matter.

1.2 RELATED WORK SPECIFIED ELSEWHERE

A. CCTV Inspection, Inspect pipelines per SSPWC Section 500-1.1.5 and as modified by the Brownbook.

B. 01112 Description of Work.

C. 01330, Shop Drawings and/or Submittals.

D. 02445, Access Pit Excavation Support System.

E. 02585, Maintenance Hole and Precast Vault Construction.

F. 13470, Temporary Odor Control.

1.3 REFERENCES AND DEFINITIONS

A. References:

1. "SSPWC":

a. Standard Specifications for Public Works Construction, the latest edition and supplement adopted by the Board of Public Works and as modified by the Brownbook.

B. Definitions:

1. "Pipe liner", "slipline", "slipline pipe", "liner", and "pipe lining":

a. For the purposes of this Section, "pipe liner", "slipline", "slipline pipe", "liner" and "pipe lining" are synonymous. Due to the varying methods of rehabilitation, not all requirements of this specification may be applicable.

2. "Host pipe":

a. For the purposes of this section, "host pipe" refers to the existing, deteriorated sanitary sewer conduit.

3. "Pipe proofing" or "proofing":

a. The process of winching or jacking a test section or mandrel through the host pipe to verify that it has the clearance to accept the intended liner.

4. "Service and tributary connections":

a. Service connections, house connections, intercepts with other pipes, tie-ins, intercepts with structures, maintenance shaft openings, laterals, access openings, etc.

1.4 SUBMITTALS AND SHOP DRAWINGS

A. Except as noted, submit for review and approval. Technical Shop Drawings with plans and calculations shall be prepared by a California Registered Civil or Structural Engineer.

1. Project layout: Show locations, reference maintenance holes, laydown area and the method(s) of rehabilitation.

2. Liner Installation: This submittal will be "Rejected—Incomplete" if any of the following elements are not included:

a. Installation Procedure and Sequencing.

b. Pipe layout: Number each pipe, show each pipe joint, joint coupling, fittings, lateral, maintenance hole, junction structure, lateral reconnection details, etc., as applicable to the rehabilitation system.

c. Description of each Constituent Used: Detailed description of each constituent used in manufacturing the liner (include resin manufacturers, resin numbers, material sources, material suppliers, cured thickness, liner color, etc).

d. Liner joint description: Identify all materials such as the gasket compound, couplers, rings and any reinforcement. Provide a scale drawing of the joint with dimensions. Include a copy of the laboratory test showing the successful performance of the proposed joint system in the pressure/vacuum tests as applicable to the rehabilitation system.

e. Use of more than one rehabilitation material: If two or more rehabilitation materials are to be used, the method of joining the materials shall be submitted to the ENGINEER within 40 working days after Notice-to-Proceed with the work. Submittal shall include at a minimum the properties of the joining materials, three (3) physical sample coupons of the joining materials and the rehabilitation materials in an assembled mock-up, a demonstration of the strength of the joining materials or system, and at least one (1) case history where such a system has been successfully installed in a sewer application.

f. Pipe ends and joint protection during jacking as applicable to the rehabilitation system.

g. Liner strength calculations.

h. Test section/mandrel: Provide description and proposed handling information. A properly designed mandrel or test section may be used alone or in combination with muck sleds.

i. Liner buoyancy calculations during grouting: Include procedure to maintain proper grade and alignment until the grout sets.

j. Reinstatement of service and tributary connections: Provide information describing methods, materials and procedure to reinstate each service and tributary connection.

k. Annular grouting: Safe grouting pressure, grouting equipment, anticipated grout injection pressure, monitoring program for grout densities and viscosity, estimated volume of annular space within each reach, method of verifying completeness of grouting the annular space, bulkheads, vents, grout ports, proposed grout port locations, etc.

l. Material Safety Data Sheets.

m. Liner handling/transporting procedures.

n. Proposed emergency sewer procedures: Procedures and preparedness to stabilize the site and restore sewer service during events such as the mandrel/cleaning bucket/slipliner becoming lodged or if the sewer collapses during cleaning or sliplining.

o. Coordination: Written confirmation from the CONTRACTOR, liner installer, grout mix designer, grout installer and pipe manufacturer that each has reviewed and concurs with the "Liner Installation" submittal.

p. Sliplining-Operations-Field Superintendent's Experience: Documentation demonstrating field superintendent has minimum 10 years related work experience on similar projects and has supervised at least three slipline projects of comparable size and complexity. List each project with conduct reference name and phone number.

q. Liner Pipe Insertion Machine Details.

3. Construction procedure: Describe flow management, maintaining service connections, sequencing, proposed pipe cleaning methods, point repairs, installation methods, etc.

4. Describe all proposed materials and identify material manufacturing sources.

5. Material certifications.

6. Manufacturer-recommended construction details not shown on the plans.

7. Odor control.

8. Traffic control.

9. Description of closed-circuit television (CCTV) inspection equipment along with a sample of the log sheets.

10. Material Safety Data sheets and work site safety plan: Submit for information only.

11. Emergency Spill Response Plan (sewer overflows): Identify standby equipment and procedures.

12. Shoring, backfill and other necessary submittals required by the contract documents.

13. Procedure to remove rejected material per Section 3.04-I of this specification.

1.5 QUALITY ASSURANCE

A. Approved pipeline rehabilitation: Only the rehabilitation systems and methods described in this Section or shown on the Contract Drawings may be used. CONTRACTOR proposals for alternates, substitutions or using other systems and methods are not acceptable.

B. Approved sanitary sewer materials: Only the materials described in this Section may be used. CONTRACTOR proposals for material alternates and substitutions that do not appear on the Approved List are not equal and are not acceptable.

C. Protection of materials: Store and handle to prevent environmental degradation (temperature extremes, ultraviolet exposure, etc) and physical damage.

D. Rehabilitation pipe, linings, liners and other materials: New and manufactured within six months prior to installation. When the six-month period has lapsed, the CONTRACTOR may submit test data from an approved, independent laboratory verifying that the material has no degradation. The ENGINEER may allow up to two six-month extensions to the manufacturing age requirement. Thermosetting and thermoplastic materials older than eighteen months are considered degraded and rejected without recourse.

E. Damaged, degraded or otherwise rejected materials: Following written notification of rejected materials by the Inspector, segregate the rejected material immediately and remove from the job-site within 72 hours.

PART 2 - PRODUCTS

2.1 APPROVED LINER SYSTEMS, PER S-DRAWINGS

PART 3 - EXECUTION

3.1 PREPARATORY WORK (POINT REPAIRS)

A. Point Repairs to existing damaged brick work or to fill in voids prior to installation of the final lining is the CONTRACTOR's option (i.e., restoration of existing sewer sections to their original design conditions).

1. Apply Point Repairs as necessary for the conduct of the Work. Point repairs are not a Contract requirement except as to provide for the safety of CONTRACTOR's and CITY's personnel during the Work and inspection of the Work in compliance with all applicable safety or other regulatory requirements.

2. Identify and protect all interfering utilities and substructures prior to excavating, dewatering, flow bypassing, pipe repairs or replacement.

3. Cleanup: Restore surface and surface improvements, properly dispose of all excess material and clean up the site.

3.2 CLEANING PIPELINES

A. Perform cleaning of existing sewer and surface preparation per Specification Section 01112, and Section 500 of the Brown Book.

B. Pipe proofing: In conjunction with or following cleaning operations, proof the host pipe using a mandrel or test section. Outfit the mandrel to travel upstream or downstream several times and with baffles to collect any remaining debris. The mandrel must pass through the entire length of host pipe. If the mandrel encounters unexpected difficulty, retrieve the mandrel, re-clean the host pipe and resume proofing. If the mandrel becomes lodged, excavate to retrieve, apply a remedial Point Repair, provide mandrel modification, if necessary and resume proofing. CONTRACTOR shall note that surface excavation to retrieve a lodged mandrel may not be possible in all sections along the length of the project and shall prepare alternate recovery methods for these sections.

C. Mandrel design: Shall be of substantial construction, capable of rigidly maintaining its shape during cleaning and/or proofing operations. Should there be operational problems due to offset joints of the existing sewer, the CONTRACTOR shall be responsible for necessary design modifications of all mandrels and all associated cost should be included in the bid amount.

D. Mandrel dimensions:

1. The mandrels to be used shall have an outside diameter that is 1-inch greater than the outside profile of the approved liner pipe or pipe coupling, whichever the larger. The length of each mandrel shall be 20 percent longer than the longest slipline pipe section. The test section/mandrel shall be constructed of steel, sufficient to withstand excessive handling. The test section/mandrel shall be

stiffened at each end with a minimum of four welded cross-braces, intersecting at the center of the mandrel cross-sectional circle at intervals of 45 degrees.

3.3 TELEVISION INSPECTION (CCTV DOCUMENTATION BY CONTRACTOR)

A. The CONTRACTOR shall in the presence of the ENGINEER and the INSPECTOR take video and still pictures of the job site and the location of the field office, material staging and storage areas, all access pit sites, all maintenance hole sites and any location where work will be performed, as directed by the ENGINEER and INSPECTOR before any construction work begins. The CONTRACTOR shall make a copy of this information and give one copy to the ENGINEER and shall keep the other copy.

B. The host pipe shall be CCTV inspected prior to cleaning to determine the existing condition of the host pipe. A second CCTV inspection shall be performed after successful completion of cleaning and prior to liner pipe installation to verify that the host pipe is prepared for the liner pipe installation. A third CCTV inspection shall be performed following the successful completion of liner pipe installation and the reconnection of all laterals prior to grouting the annular space. A final CCTV inspection shall be performed after successful completion of grouting of the annular space, as applicable.

1. CCTV Equipment:

2. Camera: Remote-controlled, focus from 6" to infinity. Resolution at 350 lines per inch, minimum. During the reinstatement of laterals, only use "rotating lens" or "pan and tilt" cameras.

3. Footage counter: Accurate within plus or minus 1 percent. Include the real time counter measurement as a caption on the recorded tape. Use maintenance hole stations and maintenance hole numbers as references.

4. Television monitor: Color, minimum 350 lines per inch resolution.

5. Lighting: Adequate to fully illuminate the pipeline and positioned to not produce glare.

6. Mobility: Capable of steadily traveling with or against the flow. The maximum speed while inspecting and recording is 30 feet per minute.

7. Quality of Inspection Record of Final CCTV Inspection (per Article 3.03B above): The recorded video image must clearly show the full circumference of the pipeline, in focus, with adequate lighting to see detail, with uniform and steady travel, and depicting the date and time of inspection, footage of travel, street, project title and pipe size. At laterals, service connections and pipe defects, provide a closer, more detailed examination and document the orientation, location and size. The written records must further describe those laterals, service connections and pipe defects and index them to their location on the video record.

8. If debris is encountered, retrieve the CCTV unit, re-clean the pipeline and resume CCTV inspection.

9. For any CCTV inspection which shows that the CONTRACTOR has not successfully completed any portion of the work performed prior to the CCTV

inspection, such CCTV inspection shall be performed again after the CONTRACTOR makes the necessary corrections. The CONTRACTOR shall perform both the corrections and the additional CCTV at the CONTRACTOR's expense.

10. Results for CCTV inspections shall be submitted as color DVDs. All CCTV inspection DVDs shall clearly show the entire periphery of the pipeline above the water surface without any visual obstructions due to a submerged camera, steam in the pipe, water on the lens or any other conditions as determined by the ENGINEER. Those portions of any CCTV inspection that are visually obstructed will be rejected by the ENGINEER and shall be televised again by the CONTRACTOR as directed by the ENGINEER at no additional cost to the City of Los Angeles.

11. After completion of the work, all CCTV inspection videos and records shall become the property of the ENGINEER. All costs associated with the CCTV inspections of the host pipe including all other appurtenant work shall be included in the appropriate bid item in the Schedule of Work and Prices.

12. Within twenty-four (24) hours after the pre-liner installation CCTV inspection of the host pipe is complete, the CONTRACTOR shall deliver the pre-liner installation DVDs to the ENGINEER for review.

13. Locations of laterals are approximate only. The CONTRACTOR shall determine exact locations prior to installation of the pipe liner.

14. Immediately following cleaning or pipe proofing or pipe installation, inspect the pipe by CCTV at the next expected low flow. Verify the host pipe condition and effectiveness of cleaning, proofing or installation operations. Record the inspection using a DVD recorder. Deliver the original DVDs, audio commentary, log sheets, and reports to the ENGINEER at the close of each working day. As desired, the CONTRACTOR may produce duplicates for its own use.

C. Laser Profiling & Sonar Surveying: In additional to conventional CCTV, the CONTRACTOR, shall, as part of the pre-cleaning CCTV effort, conduct sewer assessment using laser profiling and sonar profiling, conforming to the following requirements:

1. Equipment used shall be appropriate for the conditions expected in the line.

2. Assessment shall be completed by a certified National Association of Sewer Service Companies (NASSCO) Pipeline Assessment and Certification Program (PACP) trained operator(s) using established PACP coding and observation.

3. Pipeline assessment/inspection report shall contain visual profile of pipe, profile comparison and dimension data of significant defects when using sonar profiling and laser profiling to survey the pipe. The report shall include the longitudinal pipeline cross-sections showing the crowning corrosion profile and/or debris profile as well as documenting any additional manholes or changes that were found during the inspection.

4. CONTRACTOR shall produce an executive summary for the CCTV Inspection including a detailed report for Sonar Profiling and Laser Profiling in an electronic format acceptable to the ENGINEER. The final reports in digital format for Sonar Profiling and Laser Profiling shall be submitted within three (3) weeks from the completion of all inspections.

5. The executive summary will clearly show the location, in relation to adjacent manholes (i.e., stations), of each lateral/main connection discovered. In addition, other data of significance including the locations of unusual conditions, cracks, misalignments, collapsed sections, presence of debris and deposits and other discernible features will be included as brief and informative comments of the sewer pipeline conditions.

6. Also included is a viewer which provides a robust interactive viewing environment that combines defect observations with video, multi-sensor graphs, visualizations color coded to indicate problem areas, and cross sections depicting specific conditions along a pipe.

7. Contractor's reports shall provide observable pipe defects, sediment heights and volumes, ovality, corrosion, and gas levels (gas levels with the Responder Float only). Report major defects and failures in the pipe immediately, as observed.

8. As a minimum, the CONTRACTOR shall deliver the following to the City for its sole use and ownership:

    a. An electronic copy of all field inspection data in PACP 4.4. format.

    b. Assessment reports in *.pdf format and hard copies of detailed observations and recommendations for each asset inspected. Reports shall provide observable pipe defects, corrosion, ovality, deflection, sediment heights, and volume. Where major defects and failures are detected, the CONTRACTOR shall notify the ENGINEER immediately.

    c. A robust viewer that provides interactive synchronized laser & sonar data with CCTV d*ata, by footage for each pipe segment.*

3.4 PIPE REHABILITATION

A. After the CONTRACTOR has verified the condition of the host pipe and the ENGINEER has made his observations of cleanliness of the host pipe, use approved methods and materials to rehabilitate the host pipe.

B. If pipe rehabilitation does not commence within twenty-four hours after cleaning, the pipeline must be re-cleaned and prepared. Re-cleaning will not be necessary if the CONTRACTOR installs and maintains an approved method to capture debris and prevent debris from entering the cleaned reach of pipe. The proposed debris collection method must be submitted to ENGINEER for approval prior to cleaning pipelines. Should the debris collection method fail and allow debris to contaminate the cleaned pipe, the CONTRACTOR must re-clean the pipe at no additional cost to the CITY.

C. Service connections (includes house connections, laterals and cleanouts): Provide each affected user with 72 hours advance notice prior to restricting flow. Provide temporary sanitary collection services during flow restrictions. Immediately following pipe

rehabilitation, the service connections must be restored as quickly as possible and within 24 hours. The circumference of the restored service connection must be smooth and fully open. Service connections that are overcut must be repaired by remedial Point Repair.

D. Rehabilitation operations: Protect the existing host pipe, maintenance holes and other improvements from damage. In particular, metallic parts of rehabilitation equipment may not come in direct contact with pipe or maintenance hole shafts. Rehabilitation operations may not surcharge laterals or otherwise cause flow or gasses to enter service connections.

E. Pipe Terminations at Maintenance Holes and Structures: To accept end seals, extend pipes into the maintenance hole or structure for a distance of 1/2" to 1-1/2". Where the pipe is installed through an intermediate maintenance hole or structure, the CONTRACTOR may extend the crown section for 1" plus or minus 1/2" distance and grind off the pipe crown flush with the maintenance hole shelf.

F. End Seals: At each end of each pipe rehabilitation section, seal the annulus with approved rubber gaskets and/or sealants to withstand 5 psi positive and negative pressure. Tool sealants to form a smooth transition for flow. Where necessary to allow sealants to bond and cure, install a temporary internal bypass. Where gap is over 1/2-inch wide, Contractor shall construct a bulkhead to seal ends, composed of approved cementitious material and sealant.

G. Sealing Service Connections: As specified or required on the Plans. Shore and excavate to expose the connection, use approved sealant to caulk the circumference of rehabilitation pipe to host pipe joint, seal the service connection to the host pipe with acid-resistant epoxy mortar and backfill.

H. Specified Liner Load Ratings: The load ratings are as specified on the S-drawings. The specified liner systems do not consider construction means and methods for installation, transportation or handling. Increase the liner load rating or stiffness as necessary for construction loading, buoyancy, jacking, grouting, friction, winching, and all other operations performed during construction process.

I. Quality assurance: All work is subject to inspections per General Requirements Section 01452. Provide the ENGINEER and INSPECTOR with full access to manufacturing plants, fabrication plants, assembly yards and the worksite for announced and unannounced inspections.

1. Manufacturing of pipe, pipe liner, pipelining and other products for rehabilitation:

a. Material certification: Prior to fabrication, submit a written certification that the proposed rehabilitation system continues to be the approved system and that no changes in formulation, compound or constituent has since occurred.

b. Fabrication and Manufacturing: For each lot of material, perform at least one series of quality control tests to verify that the intended cell classification is present.

c. Lot for Quality Control Tests: For each manufacturing line, unless otherwise noted, a lot is each production crew shift or each change in material batch or completion of a coil (for strip and helical products),

whichever occurs first. A lot cannot exceed 50 pieces for pipe, or 200 lineal feet for coiled products.

2. Installation of pipe, pipe liner, pipe lining and other products for rehabilitation:

   a. Field verification: Each material shipment received at the jobsite must be accompanied with the Inspector's written release from the manufacturing plant.

   b. Field sampling: After installation and processing of the pipe, pipe liner or pipe lining, retrieve the required samples and deliver to the INSPECTOR as soon as the samples are washed with potable water and wiped dry. Mark with the location taken, pipe crown orientation, date, project and CONTRACTOR's name.

   c. Tests: Test coupons will be fabricated from each pipe sample at the 10, 11, 12, 1 and 2 o'clock positions with the crown being 12 o'clock. The coupons are tested for minimum thicknesses and dimensions, initial flexural modulus (ASTM D 790), initial tensile strength and elongation (ASTM D638), specific gravity, impact strength/hardness (ASTM D256/D2240 Shore D) and cell classification (ASTM D1784/ D3262/ D3350) and compared to archived test reports for acceptance or rejection.

3. Post-installation: After restoring service connections, installing end seals and sealing required service connections, perform a post-installation television inspection per Section 3.03.

J. Markings for pipe and fittings: For every 5 lineal feet of pipe and for each fitting, provide product codes that identify manufacturer, SDR/load rating, size, material, cell classification, plant date and the manufacturing shift and machine as applicable.

K. Rejections: Submit procedures to remove the rejected material and install compliant materials immediately. Delays caused by Rejections are subject to liquidated damages. In addition, the CONTRACTOR is subject to costs for additional inspection and testing. Some causes for rejection are:

1. Material damaged during transit, handling or installation.

2. Thermoplastic compounds found to be altered, changed or modified from the approved assembly.

3. Material unable to achieve the required physical properties.

4. Installations that do not satisfy specifications.

3.5 CONSTRUCTION SEQUENCING - NOT USED

3.6 REHABILITATION SYSTEMS

A. Rehabilitation from two access pits to a common point: Provide coupling devices to join pipe internally. Method of joining shall be submitted to ENGINEER for review within 40 working days after Notice to Proceed with the work. Submittal shall include at a minimum the locations of access/jacking pits, details of joining system proposed, and proposed methods of construction.

B. Sewer liner protection: Use devices such as cushions, sleeves, sleeves at the lead piece of pipe, and any other devices as required to protect the liner during installation. If sliplining, the jacking force must be applied directly to the liner body without affecting the couplings, joints or gaskets.

END OF SECTION

THIS PAGE INTENTIONALLY LEFT BLANK

SECTION 03100
CONCRETE FORMWORK

PART 1 - GENERAL

1.1 THE REQUIREMENT

A. The CONTRACTOR shall furnish all materials for concrete formwork, bracing, shoring, and supports and shall design and construct all falsework and scaffolding, all in accordance with the provisions of the Contract Documents.

B. Definitions:

1. Exposed Concrete: All concrete that is visible in the finished work, including concrete to be painted.

2. Unexposed Concrete: All other concrete that is concealed in the finished work, including plastered surfaces and attic and utility spaces.

1.2 RELATED WORK SPECIFIED ELSEWHERE

A. Section 02220 - Earthwork.

B. Section 03200 - Reinforcement Steel.

C. Section 03290 - Joints in Concrete.

D. Section 03300 - Cast-in-Place Concrete.

E. Section 03315 - Grout.

F. Section 03370 - Concrete Curing.

G. Section 05300 - Metal Decking and Open-Web Steel Joists.

H. Section 07900 - Joint Sealants.

1.3 REFERENCE SPECIFICATIONS, CODES, AND STANDARDS

A. Comply with the reference standards and Standard Specifications as specified in the GENERAL REQUIREMENTS.

B. Comply with the current provisions of the following Codes and Standards, as applicable:

1. Government Standards:

PS 1	U.S. Product Standard for Concrete Forms, Class I.
PS 20	American Lumber Softwood Standard.
CSS	Caltrans Standard Specifications.

2. Commercial Standards:

ACI 347	Recommended Practice for Concrete Formwork.
ACI 117	Standard Tolerances for Concrete Construction and Materials.

1.4 CONTRACTOR SUBMITTALS

A. Submittals shall be made in accordance with the GENERAL REQUIREMENTS.

B. The following submittals and specific information shall be provided.

1. Falsework Calculations and Drawings: The CONTRACTOR shall comply with all the latest applicable Sections of the Division of Industrial Safety, Construction Safety Orders. In addition, formwork/falsework must be designed, fabricated, erected, supported, braced, and maintained so that it will be capable of supporting without failure all vertical and lateral loads that might be applied to the formwork. Drawings and plans, including all revisions for the jack layout, formwork (including shoring equipment), working decks, and scaffolds, must be available at the jobsite. All shoring equipment (including equipment used in reshoring operations) must be inspected prior to erection to determine that the equipment meets the requirements specified in the formwork drawings. Plans and Calculations shall be prepared and signed by a Civil Engineer, registered in the State of California. A copy of the falsework plan or shoring layout shall be available on the job site at all times. The Engineer who designed the falsework or vertical shoring shall personally inspect such work and provide a written certification that the work conforms to the design.

2. Scaffolding Calculations and Drawings: Scaffolding shall be defined in accordance with and shall conform to the Construction Safety Orders of the Division of Industrial Safety. If scaffolding is constructed for this project over or adjacent to traffic, or suspended from the traveled way, the Contractor shall submit to the Engineer working drawings for scaffolding systems. The scaffolding manufacturer's name, address, and phone number shall be shown on the working drawings. The working drawings, details and calculations for the scaffolding shall be stamped and signed by an engineer who is registered as a Civil Engineer in the State of California. In addition, prior to submitting the working drawings to the Engineer, the working drawings shall be stamped and signed by an independent reviewer who is registered as a Civil Engineer in the State of California. The independent reviewer shall not be employed by the same entity preparing the working drawings.

3. The CONTRACTOR shall, in accordance with the requirements in GENERAL REQUIREMENTS file with the City detailed plans of the falsework and scaffolding proposed to be used. Such plans and calculations shall be in sufficient detail to indicate the general layout, pattern layout, dimensioned to precisely locate grooves, form panel jointing, and similar features. The submittal shall also include sizes of members, anticipated stresses, grade of materials to be used, and typical soil conditions.

    a. Form Release Compound.
    b. Form Ties and Spreaders.
    c. Installation Instructions.

1.5 QUALITY ASSURANCE

A. Tolerances: The variation from established grade or lines shall not exceed 1/4-inch in 10 feet and there shall be no offsets or visible waviness in the finished surface. All other tolerances shall be within the tolerances specified in ACI 117, unless noted otherwise.

B. Laborers: Use adequate number of skilled laborers who are thoroughly trained and experienced in the necessary crafts and who are completely familiar with the specified requirements and the methods needed for proper performance of the work of this Section.

C. Prior to construction of formwork for concrete beams and slabs above grade, Contractor shall conduct a meeting at the site to determine and define all cambers required for the project. ENGINEER, Contractor and Contractor's formwork installer shall be in attendance at this meeting.

D. Engage a licensed surveyor to verify that work is within specified tolerances. Surveyor shall report in writing to the ENGINEER, with copy to Contractor, certifying work as acceptable or indicating deviations from allowable tolerances.

1.6 DELIVERY, STORAGE, AND HANDLING

A. Deliver materials for forms in timely manner to ensure uninterrupted progress.

B. Store materials by methods that prevent damage and permit ready access for inspection and identification.

PART 2 - PRODUCTS

2.1 GENERAL

A. Except as otherwise expressly accepted by the ENGINEER, all lumber brought on the job site for use as forms, shoring, or bracing shall be new material. All forms shall be smooth surface forms and shall be of the following materials:

Walls	-	Steel or plywood panel
Columns	-	Steel, plywood or fiber glass
Roof, floor, deck and soffit	-	Plywood, Steel Panels
All other work	-	Steel panels, plywood or tongue and groove lumber

2.2 FORM AND FALSEWORK MATERIALS

A. Materials for concrete forms, formwork, and falsework shall conform to the following requirements:

1. Lumber shall be Douglas Fir or Southern Pine, construction grade or better, in conformance with U.S. Product Standard PS20.

2. Plywood for concrete formwork shall be new, waterproof, synthetic resin bonded, exterior type Douglas Fir or Southern Pine plywood manufactured especially for concrete formwork and shall conform to the requirements of PS 1 for Concrete Forms, Class I, and shall be edge sealed.

3. Form materials shall be metal, wood, plywood, or other material approved by the ENGINEER that will not adversely affect the concrete and will facilitate placement of concrete to the shape, form, line, and grade shown. Metal forms shall be an approved type that will accomplish such results.

4. Forms for exposed exterior concrete surfaces shall be American Plywood Association (APA) High Density Overlay (HDO) Plyform Class I Ext. 48" X 96" X 3/4" minimum thickness.

5. Forms for other concrete surfaces shall be American Plywood Association (APA) Douglas Fir B-B Plyform Class I Exterior PS 1, 3/4-inch minimum thickness.

6. Coated Form Plywood: For exposed painted concrete, plastic overlaid plywood of grade specified above, factory coated with a form coating and release agent equal to "Noxcrete".

7. Tube forms: Sonoco "Seamless Sonotubes", Alton Building Products "Sleek Seamless Standard Wall", or equal, type leaving no marks in concrete, 1-piece lengths for full required height.

B. Unless otherwise shown, exterior corners in exposed concrete members shall be provided with 3/4-inch chamfers. Re-entrant corners in concrete members shall not have fillets unless otherwise shown.

C. Forms and falsework to support the roof and elevated floor slabs shall be designed for the total dead load, and a minimum construction live load of 30 psf.

D. Forms proposed for use at bridges shall comply with Caltrans Standard Specification Section 51.

2.3 FORM TIES

A. Form ties with integral waterstops shall be provided with a plastic cone or other suitable means for forming a conical hole to insure that the form tie may be broken off back of the face of the concrete. The maximum diameter of removable cones for rod ties, or of other removable form-tie fasteners having a circular cross-section, shall not exceed 1-1/2-inches; and all such fasteners shall be such as to leave holes of regular shape for reaming.

B. Form ties for water-retaining structures shall have integral waterstops. Removable taper ties may be used except for water bearing structures, when approved by the ENGINEER. A preformed neoprene or polyurethane tapered plug sized to seat at the center of the wall shall be inserted in the hole left by the removal of the taper tie.

2.4. FORM RELEASE COMPOUND

A. Form release compound shall be non-staining clear coating free from oil, silicone, wax, and not grain-raising, Use "Nox-crete Form coating" by Nox Crete, "Formshield" by Euclid Chemical Company, "Burke Bio Release" by Edoco, or "Cast-Off" by Sonneborn, or an approved equal. Where form liners are used, provide form compound recommended by form liner manufacturer. However, regardless of product use, provide form compound that is VOC compliant for the area used.

2.5 EARTH FORMS

A. Unless otherwise indicated or required, concrete for footings and pile caps may be placed directly against vertical excavated surfaces, provided the material will stand without caving, that minimum reinforcing steel clearances are maintained, and suitable provisions are taken to prevent raveling of top edges or sloughing of loose material from walls of excavation. Sides of excavation shall be made with a neat cut and the width made as indicated. Concrete which is exposed to view on exterior shall be formed to maintained depth of 6 inches below finished grade.

PART 3 - EXECUTION

3.1 GENERAL

A. Forms to confine the concrete and shape it to the required lines shall be used wherever necessary. The CONTRACTOR shall assume full responsibility for the adequate design of all forms, and any forms which are unsafe or inadequate in any respect shall promptly be removed from the WORK and replaced at the CONTRACTOR's expense. A sufficient number of forms of each kind shall be provided to permit the required rate of progress to be maintained. The design and inspection of concrete forms, falsework, and shoring shall comply with applicable local, state and Federal regulations. Plumb and string lines shall be properly installed before concrete placement and shall be maintained during placement. Such lines shall be used by CONTRACTOR's personnel and by the INSPECTOR and shall be in sufficient number and properly installed. During concrete placement, the CONTRACTOR shall continually monitor plumb and string line form positions and immediately correct deficiencies.

B. Concrete forms shall conform to the shape, lines, and dimensions of members as called for on the Drawings, and shall be substantial, free from surface defects, and sufficiently tight to prevent leakage. Forms shall be properly braced or tied together to maintain their position and shape under a load of freshly-placed concrete. If adequate foundation for shores cannot be secured, trussed supports shall be provided.

C. Camber: Place suitable jacks, wedges, or similar means to induce camber and to correct settlement in forms before and during concrete placing. Camber shall be as determined in pre-installation meeting specified above. In general, formwork shall be capable of accommodating camber of 1/8" per 10' of span plus 1/4".

3.2 FORM DESIGN

A. All forms shall be true in every respect to the required shape and size, shall conform to the established alignment and grade, and shall be of sufficient strength and rigidity to maintain their position and shape under the loads and operations incident to placing and vibrating the concrete. Suitable and effective means shall be provided on all forms for holding adjacent edges and ends of panels and sections tightly together and in accurate alignment so as to prevent the formation of ridges, fins, offsets, or similar surface defects in the finished concrete. Plywood, 3/4-inch and greater in thickness, may be fastened directly to studding if the studs are spaced close enough to prevent visible deflection marks in the concrete. The forms shall be tight so as to prevent the loss of water, cement and fines during placing and vibrating of the concrete. Specifically, the bottom of wall forms that rest on concrete footings or slabs shall be provided with a gasket to prevent loss of fines and paste during placement and vibration of concrete. Such gasket may be a 1- to 1-1/2-inch diameter polyethylene rod held in position to the underside of the wall form. Adequate clean-out holes shall be provided at the bottom of each lift of forms. The size, number, and location of such clean-outs shall be as acceptable to the INSPECTOR.

B. Actual form design shall conform to ACI 347.

C. For concrete mixes characterized as self-consolidating concrete, high performance concrete, or known to contain components that can potentially extend the plastic state of the concrete, the forms shall be designed to sustain the resulting hydrostatic pressure for the total pour height or pressure head for that day of pour, whichever is more. For such mixes, appropriate set-time tests shall be conducted in preparation of the mix design and this information made available to the form designer.

D. Forms proposed for use at bridges shall comply with Caltrans Standard Specification Section 51-1.

3.3 CONSTRUCTION

A. Vertical Surfaces: All vertical surfaces of concrete members shall be formed, except where placement of the concrete against the ground is shown. Not less than 1-inch of concrete shall be added to the thickness of the concrete member as shown where concrete is permitted to be placed against trimmed ground in lieu of forms. Such permission will be granted only for members of comparatively limited height and where the character of the ground is such that it can be trimmed to the required lines and will stand securely without caving or sloughing until the concrete has been placed.

B. Construction Joints: Concrete construction joints will not be permitted at locations other than those shown or specified, except as may be acceptable to the ENGINEER. When a second lift is placed on hardened concrete, special precautions shall be taken in the way of the number, location, and tightening of ties at the top of the old lift and bottom of the new to prevent any unsatisfactory effect whatsoever on the concrete. Pipe stubs and anchor bolts shall be set in the forms where required.

C. Provide for openings, offsets, keyways, recesses, moldings, reglets, chamfers, blocking, screeds, bulkheads, anchorages, inserts and other features as required. Fill form joints to produce smooth surfaces, intersections, and arrises. Use polymer foam or equivalent fillers at joints and where forms abut or overlap existing concrete to prevent leakage of mortar.

D. Set embedded piping and rough hardware in forms to be embedded in concrete in a manner so that the required strength of the structure will not be reduced.

E. Apply form release compound on formwork in accordance with manufacturer's instructions prior to placing of reinforcing steel, anchorages, and embedded items.

F. Construct forms suitable for removal without hammering or prying against and damaging the concrete.

G. Openings in Forms: Provide as required to facilitate cleaning and inspection. Close such openings immediately after cleaning and before placement of concrete. Provide air relief holes in formed top surfaces of concrete elements as required.

H. Form Ties:

1. Embedded Ties: Holes left by the removal of form tie cones shall be clean and rough before being filled with mortar as specified for "Finish of Concrete Surfaces" in Section 03300 - Cast-in-Place Concrete. Wire ties for holding forms will not be permitted. No form-tying device or part thereof, other than metal, shall be left embedded in the concrete. Ties shall not be removed in such manner as to leave a hole extending through the interior of the concrete members. The use of snap-ties which cause spalling of the concrete upon form stripping or tie removal will not be permitted. If steel panel forms are used, rubber grommets shall be provided where the ties pass through the form in order to prevent loss of cement paste. Where metal rods extending through the concrete are used to support or to strengthen forms, the rods shall remain embedded and shall terminate not less than 1-inch back from the formed face or faces of the concrete.

2. Removable Ties: Where taper ties are approved for use in non water bearing structures, the larger end of the taper tie shall be on the wet side of walls in water retaining structures. After the taper tie is removed, the hole shall be thoroughly cleaned and roughened for bond. A precast neoprene or polyurethane tapered plug shall be located at the wall centerline. The hole shall be completely filled with non-shrink grout for water bearing and below-grade walls. The hole shall be completely filled with non-shrink or regular cement grout for above-grade walls which are dry on both sides. Exposed faces of walls shall have the outer 2-inches of the exposed face filled with a cement grout which shall match the color and texture of the surrounding wall surface.

I. Coordination:

1. Provide slots, openings, chases, recesses, grounds, nailers and screeds required by other trades and subsequent work.

2. Ensure that conduit, pipes, sleeves, anchors, hangers and ties are secured in forms before concrete is placed.

3.4 REUSE OF FORMS

A. Forms may be reused only if in good condition and only if acceptable to the INSPECTOR. Light sanding between uses will be required wherever necessary to obtain uniform surface texture on all exposed concrete surfaces. Exposed concrete surfaces are defined as surfaces which are permanently exposed to view. In the case of forms for the inside wall surfaces of water retaining structures, unused tie rod holes in forms shall be covered with metal caps or shall be filled by other methods acceptable to the INSPECTOR.

3.5 REMOVAL OF FORMS

A. Careful procedures for the removal of forms shall be strictly followed, and this work shall be done with care so as to avoid damage the concrete. No heavy loading on green concrete will be permitted. The period of time for formwork removal shall be in accordance with ACI 318, Chapter 6 and Section 303-1.4 of Standard Specifications and as follows:

1. Do not remove formwork until concrete has attained sufficient strength to support its own weight and all superimposed loads including construction loads and to permit form and falsework removal with complete safety.

2. In the case of concrete members subject to bending stresses, where the member relies upon forms for vertical support, forms shall remain in place until test cylinders attain a minimum comprehensive strength of 75 percent of the 28-day strength specified in Section 03300 - Cast in-Place Concrete, provided, that no forms shall be disturbed or removed under individual panel or unit before the concrete in the adjacent panel or unit has attained 75 percent of the specified 28-day strength and has been in place for a minimum of 7 days.

3. Forms for roofs and elevated slabs shall remain in place a minimum of 10 days after concrete has been placed.

4. Forms for all vertical walls and columns shall remain in place at least 3 days after the concrete has been placed.

5. Formwork removal shall also be subject to the curing requirements of Section 03370 of these specifications and as authorized by the ENGINEER.

6. Reshore structural members as specified below because of design requirements or construction conditions to permit successive construction.

B. The time required to establish said strength shall be determined by the ENGINEER based on test cylinders made for this purpose from the concrete placed and in accordance with ACI 318 and the curing requirements of Section 03370. If the time so determined is more than the minimum time specified above, then that time shall be used as the minimum length of time. Forms for all parts of the WORK not specifically mentioned herein shall remain in place for periods of time as determined by the ENGINEER.

3.6 FORMWORK TOLERANCES

A. Deflection: Limit deflection of forming surfaces from concrete pressure to L/240.

B. The following construction tolerances are hereby established and apply to finished walls and slabs unless otherwise shown:

Item	Tolerance
Variation of the constructed linear outline from the established position in plan.	In 10 feet: 1/8-inch; In 20 feet or more: 1/4-inch
Variation from the level or from the grades shown.	In 10 feet: 1/8-inch; In 20 feet or more: 1/4-inch
Variation from the plumb.	In 10 feet: 1/8-inch; In 20 feet or more: 1/4-inch
Variation in the thickness of slabs and walls.	Minus 1/8-inch; Plus 1/4-inch
Variation in the locations and sizes of slabs and wall openings.	Plus or minus 1/8-inch

3.7 MAINTENANCE OF FORMS

Forms shall be maintained at all times in good condition, particularly as to size, shape, strength, rigidity, tightness, and smoothness of surface. Forms, when in place, shall conform to the established alignment and grades. Before concrete is placed, the forms shall be thoroughly cleaned. The form surfaces shall be treated with a nonstaining mineral oil or other lubricant acceptable to the ENGINEER. Any excess lubricant shall be satisfactorily removed before placing the concrete. Where field oiling of forms is required, the CONTRACTOR shall perform the oiling at least two weeks in advance of their use. Care shall be exercised to keep oil off the surfaces of steel reinforcement and other metal items to be embedded in concrete.

3.8 FALSEWORK

A. The CONTRACTOR shall be responsible for the design, engineering, construction, maintenance, and safety of all falsework, including staging, walkways, forms, ladders, and similar appurtenances, which shall equal or exceed the applicable requirements of the provisions of the OSHA Safety and Health Standards for Construction, the requirements of the Construction Safety Orders of the California Division of Industrial Safety, and the requirements specified herein.

B. All falsework shall be designed and constructed to provide the necessary rigidity and to support the loads. Falsework for the support of a superstructure shall be designed to support the loads that would be imposed if the entire superstructure were placed at one time.

C. Falsework shall be placed upon a solid footing, safe against undermining, and protected from softening. When the falsework is supported on timber piles, the maximum calculated pile loading shall not exceed 20 tons. When falsework is supported on any portion of the structure which is already constructed, the load imposed by the falsework shall be spread, distributed, and braced in such a way as to avoid any possibility of damage to the structure.

D. Reshoring:

1. Minimum reshoring with falsework shall consist of not less than half the full required falsework added under the last placed floor over which full falsework is to be placed for the next floor above. Leave reshoring in place for at least 10 days after the floor above is placed, but in no case remove falsework until the next concrete placing has attained a compressive strength equal to 75% of that required for the 28 days age as determined by controlled test cylinders.

2. Maintain a form and falsework removal record.

E. Falsework proposed for use at bridges shall comply with Caltrans Standard Specification Section 51.

END OF SECTION

THIS PAGE INTENTIONALLY LEFT BLANK

SECTION 03200
REINFORCEMENT STEEL

PART 1 - GENERAL

1.1 THE REQUIREMENT

A. The CONTRACTOR shall furnish, fabricate, and place all concrete reinforcement steel, welded wire fabric, couplers, and concrete inserts for use in reinforced concrete and masonry construction and shall perform all appurtenant work, including all the wires, clips, supports, chairs, spacers, and other accessories, all in accordance with the Contract Documents.

1.2 RELATED WORK SPECIFIED ELSEWHERE

A. Section 03100 - Concrete Formwork.

B. Section 03290 - Joints in Concrete.

C. Section 03300 - Cast-in-Place Concrete.

1.3 REFERENCE SPECIFICATIONS, CODES, AND STANDARDS

A. Comply with the reference standards of the GENERAL REQUIREMENTS.

B. Comply with the current provisions of the following Codes and Standards, as applicable:

1. Commercial Standards:

ACI 315	Details and Detailing of Concrete Reinforcement.
ACI 318	Building Code Requirements for Reinforced Concrete.
ACI 350	Code Requirements for Environmental Engineering Concrete Structures.
ACI 530	Building Code Requirements & Specifications for Masonry Structures.
WRI	Manual of Standard Practice for Welded Wire Fabric.
AWS D1.4	Structural Welding Code - Reinforcing Steel.
ASTM A185	Specification for Welded Steel Wire Fabric For Concrete Reinforcement.
ASTM A497	Welded Deformed Steel Wire Fabric for Concrete Reinforcement.
ASTM A615	Specification for Deformed and Plain Billet-Steel Bars for Concrete Reinforcement.
ASTM A706	Low-alloy Deformed Steel Bars for Concrete Reinforcement.
ASTM A775	Specification for Epoxy-Coated Steel Reinforcing Bars.
ASTM A884	Specification for Epoxy-Coated Steel Wire Reinforcement.

CRSI	Manual of Standard Practice.
CRSI	Recommended Practice for Placing Bar Supports, Specifications and Nomenclature.
CRSI	Recommended Practice for Placing Reinforcing Bars.

2. Government Standards:

CSS	Caltrans Standard Specifications.
GWP	Global Warming Potential (maximum acceptable carbon emission limits, established by the California Department of General Services).

1.4 CONTRACTOR SUBMITTALS

A. General Requirements:

1. Submittal shall be made in accordance with the GENERAL REQUIREMENTS (GR).

2. Buy Clean California Act:

   a. For project specifications that include GR Section 1601, Buy Clean California Act, bidders shall submit current Environmental Product Declarations (EPDs) for each type of reinforcing steel material (A615, A706) from the originating mill used in the project as well as corresponding mill certifications. When material comes from different mills, an EPD and mill certification will be required for each mill from which the material has been obtained.
   b. An EPD must conform to the following:

      1) Shall be facility-specific manufacturer/mill EPD.
      2) Be independently verified in accordance with ISO 14025 (Type III).
      3) Be developed according to the guidelines of the applicable Product Category Rule (PCR), as identified by the Department of General Services, State of California.
      4) Have a valid date that has not expired.
      5) Shall not exceed the Global Warming Potential (GWP) limit as required by GR Section 1601.

   c. EPD shall be submitted concurrently with the product's submittal for review and approval.
   d. Specified epoxy-coated or other specified coated reinforcing steel are exempt from having an associated EPD.

B. The following submittals and specific information shall be provided.

1. The CONTRACTOR shall furnish Bill of Materials for rebar, including separate total weights in pounds for plain and epoxy coated reinforcing steel, as well as shop bending diagrams, placing lists, splice lengths and location, and drawings of all reinforcement steel prior to fabrication in accordance with GENERAL REQUIREMENTS, only if the reinforcing details differ from that shown on the plans.

2. Details of the concrete reinforcement steel and concrete inserts shall be submitted by the CONTRACTOR at the earliest possible date after receipt by the CONTRACTOR of the Notice to Proceed. Said details of reinforcement steel for fabrication and erection shall conform to ACI 315 and the requirements specified and shown. The shop bending diagrams shall show the actual lengths of bars, to the nearest inch measured to the intersection of the extensions (tangents for bars of circular cross section) of the outside surface. The shop drawings shall include bar placement diagrams which clearly indicate the dimensions of each bar splice.

3. Where mechanical couplers are required or permitted to splice reinforcement steel, the CONTRACTOR shall submit Los Angeles City Department of Building and Safety (LADBS) Research Report approval and manufacturer's literature which contains instructions and recommendations for installation for each type of coupler used; certified test reports which verify the load capacity of each type and size of coupler used; and shop drawings which show the location of each coupler with details of how it is to be installed in the formwork.

4. If reinforcement steel is required or permitted to be spliced by welding at any location, the CONTRACTOR shall submit mill test reports which shall contain the information necessary for the determination of the carbon equivalent as specified in AWS D1.4. The CONTRACTOR shall submit a written welding procedure for each type of weld for each size of bar which is to be spliced by welding; merely a statement that AWS procedures will be followed is not acceptable.

1.5 QUALITY ASSURANCE

A. All reinforcing steel fabrication shall be performed in a LADBS licensed fabricator shop for rebar.

B. The CONTRACTOR shall make provisions for sampling reinforcing steel delivered to the job site. Two sampling bars, cut from different bars and 3 feet in length for bar sizes # 3 through # 5 and 5 feet in length for bars sizes # 6 and larger, shall be taken from each 10 tons or fraction thereof, of each size and heat number delivered to the job site. When the name of the manufacturer, heat identification number, or chemical analysis is not known, the sampling interval shall be each 2.5 tons or fraction thereof, of each bar size and heat number. Tests shall consist of 2 bent tests and 2 tensile tests. Costs of initial tests will be paid by the CITY. Additional tests due to material failing initial tests shall be paid by the CONTRACTOR.

C. If reinforcement steel is welded at any location, the CONTRACTOR shall submit certifications of procedure qualifications for each welding procedure used and certification of welder qualifications, for each welding procedure, and for each welder performing the work. Such certification and qualifications shall be as required by the Los Angeles Department of Building and Safety.

D. The CONTRACTOR shall provide samples of each type of weld used in the work in a quantity and of dimensions adequate for testing. At the discretion of the INSPECTOR, radiographic testing of direct butt welds will be performed. The CONTRACTOR shall provide assistance necessary to facilitate testing. The CONTRACTOR shall repair any weld which fails to meet the requirements of AWS D1.4. The costs of testing will be paid by the CITY; except, the costs of all tests which fail to meet specified requirements shall be paid by the CONTRACTOR.

E. The CONTRACTOR shall provide to the INSPECTOR written identification of reinforcement steel by manufacturer's heat number and mil certification, and the fabricator's release number and type from the point of fabrication to the place of final incorporation of the rebar into the work.

1.6 MARKING AND SHIPPING

A. Tag bundled bars with identification, and transport and store so as not to damage any material. Use metal tags indicating size, length and other marking shown on placement drawings. Maintain tags after bundles are broken.

PART 2 - PRODUCTS

2.1 REINFORCEMENT STEEL

A. All reinforcement steel for all cast-in-place reinforced concrete construction shall conform to the following requirements:

1. Bar reinforcement shall conform to the requirements of ASTM A615, Grade 60 Billet Steel Reinforcement with supplementary requirement S-1, and ASTM A706 for rebars subject to welding, or as otherwise shown.

2. Bar reinforcement for wall boundary elements, special moment frames, or when subject to welding, shall conform to ASTM A706, unless noted otherwise.

3. Welded wire fabric reinforcement shall conform to the requirements of ASTM A185 , or ASTM A497 and the details shown; provided, that welded wire fabric with longitudinal wire of W9.5 size wire shall be either furnished in flat sheets or in rolls with a core diameter of not less than 10 inches; and provided further, that welded wire fabric with longitudinal wires larger than W9.5 size shall be furnished in flat sheets only.

4. Spiral reinforcement may be cold-drawn steel wire conforming to the requirements of ASTM A82, when approved by the ENGINEER.

5. All reinforcements shall be shop fabricated. Bending of reinforcing in the field will not be allowed.

6. Epoxy coated reinforcing steel shall conform to the requirements of ASTM A775 and A884 and shall be used where indicated on the drawing.

7. Reinforcement with any of the following defects will not be acceptable and be immediately removed from the site:

    a. Bar lengths, depths, and/or bends exceeding the specified fabrication tolerances.
    b. Bends or kinks not shown on the Drawings.
    c. Bars with reduced cross-section due to excessive rusting or other cause.

B. Accessories:

1. Accessories shall include all necessary chairs, slab bolsters, concrete blocks, tie wires, dips, supports, spacers, and other devices to position reinforcement during concrete placement. Slab bolsters shall have gray plastic-coated legs.

2. Concrete blocks (dobies), used to support and position reinforcement steel, shall have the same or higher compressive strength as specified for the concrete in which it is located. Where the concrete blocks are used on concrete surfaces exposed to view, the color and texture of the concrete blocks shall match that required for the finished surface. Wire ties shall be embedded in concrete block bar supports.

3. Use bar supports complying with CRSI recommendations, unless otherwise shown on the Contract Drawings.

4. Do not use wood, brick, or other non-complying material.

5. For slabs on grade, use supports with sand plates or horizontal runners where base material will not support chair legs.

6. For exposed-to-view completed concrete surfaces, where legs of supports are in contact with forms, provide supports with either hot-dip galvanized or plastic-protected legs. CONTRACTOR's selection subject to the ENGINEER's approval.

2.2 MECHANICAL COUPLERS

A. Mechanical couplers shall comply with the applicable Department of Building and Safety's Research Report. Location of the Mechanical Couplers shall be approved by the ENGINEER. The couplers shall develop a tensile strength which exceeds 125 percent of the yield strength of the reinforcement bars being spliced at each splice. CONTRACTOR to provide the required number of couplers and bars for testing in accordance with the Report.

B. Where the type of coupler used is composed of more than one component, all components required for a complete splice shall be supplied. This shall apply to all mechanical splices, including those splices intended for future connections.

C. The reinforcement steel and coupler used shall be compatible for obtaining the required strength of the connection. Clearance and coverage requirements shall be maintained at all times.

D. Couplers which are located at a joint face shall be a type which can be set either flush or recessed from the face as shown. The couplers shall be sealed during concrete placement to completely eliminate concrete or cement paste from entering. After the concrete is placed, couplers intended for future connections shall be plugged and sealed to prevent any contact with water or other corrosive materials. Threaded couplers shall be plugged with plastic plugs which have an O-ring seal.

E. Hot-forged sleeve-type couplers shall not be used.

2.3 WELDED SPLICES

A. Welded splices shall be provided where shown and where approved by the ENGINEER. All welded splices of reinforcement steel shall develop a tensile strength which exceeds 125 percent of the yield strength of the reinforcement bars which are connected. Provide two samples of each bar size for testing. When welding is to be done in the field, provide field prepared samples. Preparation shall be made by welder actually preparing the production run.

B. All materials required to conform the welded splices to the requirements of AWS D1.4 shall be provided.

C. All welding shall be performed by City of Los Angeles certified welders. All shop welding shall be performed at shops of a City of Los Angeles approved fabricator.

PART 3 - EXECUTION

3.1 GENERAL

A. All reinforcement steel, welded wire fabric, couplers, and accessories shall be fabricated, and placed in accordance with the requirements of the City of Los Angeles Building Code, CRSI Recommended Practices and Manual, and WRI, and the supplementary requirements specified herein.

3.2 FABRICATION

A. General: Reinforcement steel shall be accurately formed to the dimensions and shapes shown, and the fabricating details shall be prepared in accordance with ACI 315 and ACI 318 or ACI 350 (as applicable), except as modified by the Drawings. Bars shall be bent cold.

B. The CONTRACTOR shall fabricate reinforcement bars for structures in accordance with bending diagrams, placing lists, and placing drawings. Said drawings, diagrams, and lists shall be prepared by the CONTRACTOR as specified under GENERAL REQUIREMENTS.

C. Fabricating Tolerances: Bars used for concrete reinforcement shall meet the following requirements for fabricating tolerances:

1. Sheared length: ± 1 inch.

2. Depth of truss bars: + 0, - 1/2 inch.

3. Stirrups, ties, and spirals: ± 1/2 inch.

4. All other bends: ± 1 inch.

3.3 PLACING

A. Placing: Reinforcement steel shall be accurately positioned as shown, and shall be supported and wired together to prevent displacement, using annealed iron wire ties or suitable clips at intersections. All reinforcement steel shall be supported using approved accessories and chairs which are strong and rigid enough to prevent any displacement of the reinforcement steel and shall comply with the applicable Department of Building and Safety's Research Report. Where concrete is to be placed on the ground, supporting concrete blocks (or dobies) shall be used, in sufficient numbers to support the bars without settlement, but in no case shall such support be continuous. All concrete blocks used to support reinforcement steel shall be tied to the steel with wire ties which are embedded in the blocks. Use care not to damage vapor barriers where they occur.

B. The portions of all accessories in contact with the formwork shall be made of concrete, plastic, or steel coated with a 1/8-inch minimum thickness of plastic which extends at least 1/2-inch from the concrete surface. Plastic shall be gray in color.

C. Tie wires shall be bent away from the forms in order to provide the specified concrete coverage.

D. Bars additional to those shown which may be found necessary or desirable by the CONTRACTOR for the purpose of securing reinforcement in position shall be provided by the CONTRACTOR at its own expense.

E. Placing Tolerances: Unless otherwise specified, reinforcement placing tolerances shall be within the limits specified in Section 7.5 of ACI 318 except where in conflict with the requirements of the City of Los Angeles Building Code.

F. Bars may be moved as necessary to avoid interference with other reinforcement steel, conduits, or embedded items. If bars are moved more than one bar diameter, or enough to exceed the above tolerances, the resulting arrangement of bars shall be reviewed and accepted by the ENGINEER.

G. Welded wire fabric reinforcement placed over horizontal forms shall be supported on slab bolsters having gray, plastic-coated standard type legs as specified in Paragraph B herein. Slab bolsters shall be spaced not less than 30 inches on centers, shall extend continuously across the entire width of the reinforcement mat, and shall support the reinforcement mat in the plane shown.

H. Welded wire fabric placed over the ground shall be supported on wired concrete blocks (dobies) spaced not more than 3 feet on centers in any direction. The construction practice of placing welded wire fabric on the ground and hooking into place in the freshly placed concrete shall not be used.

3.5 SPACING OF BARS

A. Spacing of reinforcement shall comply with ACI 318 requirements.

B. Spacing of bars on bridge structures shall conform to the requirements in CSS Section 52-1.

3.6 SPLICING

A. General: Reinforcement bar splices shall only be used at locations shown. When it is necessary to splice reinforcement at points other than where shown, the character of the splice and location shall be as acceptable to the ENGINEER.

B. Splices of Reinforcement: The length of lap for reinforcement bars, unless otherwise shown shall be in accordance with ACI 318, Section 12.15.1 for a class B splice. Stagger splices in horizontal wall bars at least 48" longitudinal in alternate bars and opposite faces.

C. Laps of welded wire fabric shall be in accordance with the ACI 318. Adjoining sheets shall be securely tied together with No. 14 tie wire, one tie for each 2 running feet. Wires shall be staggered and tied in such a manner that they cannot slip.

D. Splices in column spiral reinforcement, when necessary, shall be made by welding or by a lap of 1-1/2 turns.

E. Field welding of bars: In accordance with the approved submittal. Continuous inspection required.

F. Mechanical couplers: Install in accordance with the approved submittal.

G. Bending or Straightening: Reinforcement shall not be straightened or rebent in a manner which will injure the material. Bars with kinks or bends not shown shall not be used. All bars shall be bent cold, unless otherwise permitted by the ENGINEER. No bars partially embedded in concrete shall be field-bent except as shown or specifically permitted by the ENGINEER.

H. Splicing of reinforcement on bridge structures shall conform to CSS Section 52-1.

3.6 CLEANING AND PROTECTION

A. The surfaces of all reinforcement steel and other metalwork to be in contact with concrete shall be thoroughly cleaned of all dirt, grease, loose scale and rust, grout, mortar and other foreign substances immediately before the concrete is placed. Where there is delay in depositing concrete, reinforcement shall be reinspected and, if necessary recleaned. Bars with reduced cross-section due to excessive rusting or other cause will not be acceptable for use and shall be replaced by the CONTRACTOR at no additional cost to the CITY.

3.7 FIELD QUALITY CONTROL

A. Inspection: Secure inspection and acceptance from INSPECTOR before concrete is placed. Make arrangements in advance for geotechnical inspection of foundations, continuous inspection as required, and/or structural observation by the designated registered design professional prior to concrete placement.

END OF SECTION

SECTION 03250
CONCRETE ACCESSORIES

PART 1 - GENERAL

1.1 THE REQUIREMENT

A. The CONTRACTOR shall furnish all tools, equipment, materials, and supplies to install all concrete accessories to complete the Work including cast-in-place anchor bolts (also known as anchor rods), epoxy grouted anchor bolts or dowels and, expansion or adhesive anchors, in accordance with the requirements of the Contract Documents.

1.2 RELATED WORK SPECIFIED ELSEWHERE

A. Section 03300 - Cast-in-Place Concrete.

B. Section 03315 - Grout.

1.3 REFERENCE SPECIFICATIONS, CODES, AND STANDARDS

A. Comply with the reference standards and Standard Specifications of the GENERAL REQUIREMENTS.

B. Comply with the current provisions of the following Codes and Standards, as applicable.

1. Commercial Standards:

AISC	Code of Standard Practice for Steel Buildings and Bridges.
AISC	Specifications for the Design, Fabrication and Erection of Structural Steel for Buildings.
ASTM A 36	Specifications for Carbon Structural Steel.
ASTM A 153	Specifications for Zinc Coating (Hot Dip) on Iron and Steel Hardware.
ASTM A 193	Specifications for Alloy-Steel and Stainless Steel Bolting Materials for High-Temperature Service.
ASTM A 194	Specifications for Carbon and Alloy Steel Nuts for Bolts for High-Pressure and High-Temperature Service.
ASTM A 307	Specifications for Carbon Steel Bolts and Studs, 60,000 PSI Tensile Strength.
ASTM A 449	Specifications for Quenched and Tempered Steel Bolts and Studs.
ASTM A 615	Specifications for Deformed and Plain Billet-Steel Bars for Concrete Reinforcement.
ASTM B 633	Specifications for Electrodeposited Coatings of Zinc on Iron and Steel.

ASTM B 695	Specifications for Coatings of Zinc Mechanically Deposited on Iron and Steel.
ASTM F 436	Specifications for Hardened Steel Washers.
ASTM F 1554	Standard Specification for Anchor Bolts, Steel, 36, 55, and 105-ksi Yield Strength.

1.4 CONTRACTOR SUBMITTALS

A. Submittals shall be made in accordance with the GENERAL REQUIREMENTS.

B. The following submittals and specific information shall be provided.

1. The CONTRACTOR shall submit shop drawings for all welded or fabricated items for use as anchors.

2. The CONTRACTOR shall submit catalog cuts and manufacturer's recommendations, with applicable City of Los Angeles Research Reports, for all expansion and adhesive anchors, and anti-seize thread lubricants.

PART 2 - PRODUCTS

2.1 GENERAL

A. Anchor Size: Anchor size shall be as specified or shown on plans.

B. Anchor Material:

1. Water-containment or sanitary structures, immersion service, or exposed exterior locations: Stainless steel.
2. Other locations: Galvanized steel as permitted by the corresponding ASTM except as listed in the contract drawings.

C. Anchor Length: Sufficient to extend through the nut(s) and not more than 1/4 inch beyond the nut when exposed while meeting the required embedment as indicated on the contract drawings or as required by the associated Los Angeles Department of Building and Safety's Research Report.

2.2 ANCHOR GRADES

A. Anchor Bolts and Nuts:

1. Stainless steel: ASTM A 193 and A 194, Type 316N, Grade 8MN.

2. Unspecified: ASTM F 1554 Grade 36; A 36 or A 307, galvanized.

3. Galvanizing: Hot dipped as required per ASTM F 1554; 1.25 ounces per square foot per ASTM A 153 or B 633; When protected from the atmosphere, moisture and sewage gases, ASTM B 695 is also acceptable.

B. Flat Washers: Same material and finish as nut and bolt.

C. Anti-Seize Thread Lubricant for use with stainless steel anchors:

1. Jet-Lube "Nikal".

2. Never-Seez "Pure Nickel Special".

3. Permatex "Nickel Anti-Seize".

4. Or an approved equal.

D. Reinforcing Steel Dowels: ASTM A 615, Grade 60. Same diameter as spliced rebar, or #4 minimum.

E. Adhesive Anchors: Use only anchor types and styles with Research Report approval by the Los Angeles Department of Building and Safety.

1. Hilti, Inc., HIT-RE 500-V3.

2. Simpson Strong-Tie Co., Inc., SET-XP.

3. Or an approved equal.

F. Expansion Anchors: Use only anchor types and styles with Research Report approval by the Los Angeles Department of Building and Safety.

1. Hilti, Kwik Bolt TZ Expansion Anchor.

2. DEWALT/Powers, PowerStud.

3. Simpson Strong-Tie, Strong Bolt 2 Wedge Anchor.

4. Or an approved equal.

PART 3 - EXECUTION

3.1 PROJECT CONDITIONS

A. Examine the areas and conditions under which the work will be performed. Correct conditions detrimental to timely and proper completion of the Work. Do not proceed until detrimental conditions are corrected.

3.2 CAST-IN-PLACE ANCHOR BOLTS

A. Provide templates or other means to ensure accurate placement. Provide sufficient threads to allow for a nut to be placed on the concrete side of the template.

B. Anchor bolts shall be clean and free of all coatings which may impair bonding with concrete.

C. Provide two nuts and a washer with each anchor bolt. Provide an additional locknut when indicated on the Drawings.

3.3 EXPANSION AND ADHESIVE ANCHORS

A. Install per Los Angeles Department of Building and Safety Approved Research Report and manufacturer's recommendations, whichever is more restrictive. Provide nuts and washers of same material and finish as anchor body.

3.4 STAINLESS STEEL ANCHORS

A. After installation of stainless steel anchor bolts or expansion anchors, lubricate threads before fastening.

END OF SECTION

SECTION 03290
JOINTS IN CONCRETE

PART 1 - GENERAL

1.1 THE REQUIREMENT

A. The Contractor shall construct all joints and bearing pads in concrete at the locations shown. Joints required in concrete structures are of various types and will be permitted only where shown, unless specifically accepted by the Engineer.

1.2 RELATED WORK SPECIFIED ELSEWHERE

A. Section 03100 - Concrete Formwork.

B. Section 03200 - Reinforcement Steel.

C. Section 03300 - Cast-in-Place Concrete.

D. Section 07900 - Joint Sealants.

1.3 REFERENCE SPECIFICATIONS, CODES, AND STANDARDS

A. Comply with the reference standards of the GENERAL REQUIREMENTS.

B. Comply with the current provisions of the following Codes and Standards, as applicable:

1. Federal Specifications:

TT-S-0227E(3)	Sealing Compound, elastomeric type, Multi-component for Caulking, Sealing, and Glazing Buildings and Other Structures).

2. U.S. Army Corps of Engineers Specifications:

CRD-C572	Specification for Polyvinyl Chloride Waterstop.

3. Other Government Standards:

CSS	Caltrans Standard Specifications.

4. Commercial Standards:

ASTM C 920	Specification for Elastomeric Joint Sealants.
ASTM D 624	Test Method for Rubber Property - Tear Resistance.
ASTM D 638	Test Method for Tensile Properties of Plastics.
ASTM D 746	Test Method for Brittleness Temperature of Plastics and Elastomers by Impact.
ASTM D 747	Test Method for Apparent Bending Modulus of Plastics by Means of a Cantilever Beam.

ASTM D 1751	Premolded Joint Filler.
ASTM D 1752	Specification for Preformed Sponge Rubber and Cork Expansion Joint Fillers for Concrete Paving and Structural Construction.
ASTM D 2240	Test Method for Rubber Property -- Durometer Hardness.

1.4 TYPES OF JOINTS

A. Construction Joints: When fresh concrete is placed against a hardened concrete surface, the joint between the two pours is called a construction joint. Unless otherwise specified, all joints in water bearing members shall be provided with a waterstop and sealant groove of the shape specified and as shown on the plans.

B. Expansion Joints: To allow the concrete to expand freely, a space is provided between the two pours, the joint shall be formed as shown on the plans. This space is obtained by placing a filler joint material against the first pour, which acts as a form for the second pour. Unless otherwise specified, all expansion joints in water bearing members shall be provided with an approved type waterstop.

C. Premolded expansion joint material shall be installed with the edge at the indicated distance below or back from finished concrete surface, and shall have a slightly tapered, dressed, and oiled wood strip secured to or placed at the edge thereof during concrete placement, which shall later be removed to form space for sealing material. The space so formed shall be filled with a joint sealant material as specified in the Paragraph in Part 2 entitled "Joint Sealant." In order to keep the two elements in line the joint shall be provided with a sleeve-type dowel as shown.

D. Control Joints (Weakened Plane): The function of the control joint is to provide a weaker plane in the concrete, where shrinkage cracks will probably occur. A groove, of the shape and dimensions as shown on the plans, is formed or saw-cut in the concrete and shall be filled with a joint sealant material as specified in the Paragraph in Part 2 entitled "Joint Sealant."

E. All other Joints, bearing devices, and elastomeric bearing pads for bridge structures shall comply with CSS Section 51.

1.4 CONTRACTOR SUBMITTALS

A. Submittals shall be made in accordance with GENERAL REQUIREMENTS.

B. The following submittals and specific information shall be provided.

1. Waterstops: Prior to use of the material required under this contract, qualification samples shall be submitted. Such samples shall consist of extruded or molded sections of each size or shape to be used. The material sample shall be representative of the material to be furnished under this contract. The balance of the material to be used under this contract shall not be produced until after the Engineer has reviewed and approved the qualification samples.

2. Joint Sealant: Prior to ordering the sealant material, the Contractor shall submit to the Engineer for review and approval, data to show compliance with the requirements of the Contract Documents. Certified test reports from the sealant manufacturer on the actual batch of material being supplied indicating compliance with the above requirements shall be furnished the Engineer before the sealant is used on the job.

3. Shipping Certification: The Contractor shall provide written certification from the manufacturer as an integral part of the shipping form, to show that all of the material shipped to this project meets or exceeds the physical property requirements of the Contract Documents. Supplier certificates are not acceptable.

4. The Contractor shall submit placement shop drawings showing the location and type of all joints for each structure.

1.5 QUALITY ASSURANCE

A. Waterstop manufacturer shall demonstrate five years (minimum) continuous, successful experience in production of waterstops.

B. Waterstop Inspection: It is required that all waterstop field joints shall be subject to inspection, and no such work shall be scheduled or started without having made prior arrangements with the INSPECTOR to provide for the required inspections. Not less than 24 hours notice shall be provided to the INSPECTOR for scheduling such inspections.

C. All field joints in waterstops shall be free of misalignment, bubbles, inadequate bond, porosity, cracks, offsets, and other defects which would reduce the potential resistance of the material to water pressure at any point. All defective joints shall be replaced with material which shall pass said inspection, and all faulty material shall be removed from the site and disposed of by the Contractor at its own expense.

D. The following waterstop defects represent a partial list of defects which shall be grounds for rejection:

1. Offsets at joints greater than 1/16-inch or 15 percent of material thickness, at any point, whichever is less.

2. Exterior crack at joint, due to incomplete bond, which is deeper than 1/16-inch or 15 percent of material thickness, at any point, whichever is less.

3. Any combination of offset or exterior crack which will result in a net reduction in the cross section of the waterstop in excess of 1/16-inch or 15 percent of material thickness at any point, whichever is less.

4. Misalignment of joint which result in misalignment of the waterstop in excess of 1/2-inch in 10 feet.

5. Porosity in the welded joint as evidenced by visual inspection.

6. Bubbles or inadequate bonding.

E. Waterstop Samples: Prior to use of the waterstop material in the field, a sample of a fabricated metered cross and a tee constructed of each size or shape of material to be used shall be submitted to the Engineer for approval. These samples shall be fabricated so that the material and workmanship represent in all respects the fittings to be furnished under this contract. Field samples of fabricated fittings (crosses, tees, etc.) will be selected at random by the INSPECTOR for testing. When tested, they shall have a tensile strength across the joints equal to at least 600 psi.

F. Construction Joint Sealant: The Contractor shall prepare adhesion and cohesion test specimens as specified herein, at intervals of 5 working days while sealants are being installed.

G. The sealant material shall show no signs of adhesive or cohesive failure when tested in accordance with the following procedure in laboratory and field tests:

1. Sealant specimen shall be prepared between 2 concrete blocks (1-inch by 2-inch by 3-inch). Spacing between the blocks shall be 1/2-inch. Coated spacers (2-inch by 1-1/2-inch by 1/2-inch) shall be used to insure sealant cross-sections of 1/2-inch by 2 inches with a width of 1/2-inch.

2. Sealant shall be cast and cured according to manufacturer's recommendations except that curing period shall not exceed 24 hours.

3. Following curing period, the gap between blocks shall be widened to one inch. Spacers shall be used to maintain this gap for 24 hours prior to inspection for failure.

H. Store waterstops under tarps to protect from oil, dirt, and sunlight.

1.6 GUARANTEE

A. The Contractor shall provide a 5-year written guarantee of the entire sealant installation against faulty and/or incompatible materials and workmanship, together with a statement that it agrees to repair or replace, to the satisfaction of the CITY, at no additional cost to the CITY, any such defective areas which become evident within said 5-year guarantee period.

PART 2 - PRODUCTS

2.1 PVC WATERSTOPS

A. General: Waterstops shall be extruded from an elastomeric polyvinyl chloride compound containing the plasticizers, resins, stabilizers, and other materials necessary to meet the requirements of these Specifications. No reclaimed or scrap material shall be used. The Contractor shall obtain from the waterstop manufacturer and shall furnish to the Engineer for review, current test reports and a written certification of the manufacturer that the material to be shipped to the job meets the physical requirements as outlined in the U.S. Army Corps of Engineers Specification CRD-C572 and those listed herein.

B. Waterstops: Waterstops shall be as detailed and as manufactured by: ; Sika Corp., Greenstreak PVC Waterstop or an approved equal:

1. Construction joints: 6-inch wide ribbed type.

   a. Greenstreak Profile No. 679 (or equal).
   b. Expansion joint for wall penetrations for concrete encased electrical duct banks: 6-inch ribbed type with hollow center bulb.

2. Greenstreak Profile No. 717 (or equal).

   a. Expansion joints: 9-inch wide ribbed type with hollow center bulb.

3. Greenstreak Profile No. 735 (or equal).

   a. Existing joints (retrofit): 6-inch wide ribbed type with hollow center bulb.

4. Greenstreak Profile No. 609 (or equal).

   a. Dumbbell-type waterstop will not be allowed unless otherwise specified or indicated on the Drawings.

C. Prefabricated joint fittings shall be used at all intersections of the ribbed-type waterstops.

D. Other Types of Waterstops: When other types of waterstops, not listed above are required and shown, they shall be subjected to the same requirements as those listed herein.

E. Waterstop Testing Requirements: When tested in accordance with the specified test standards, the waterstop material shall meet or exceed the following requirements:

Physical Property, Sheet Material	Value	ASTM Std.
Tensile Strength-min (psi)	1750	D 638, Type IV
Ultimate Elongation-min (percent)	350	D 638, Type IV
Low Temp Brittleness-max (degrees F)	-35	D 746
Stiffness in Flexure-min (psi)	400	D 747
Accelerated Extraction (CRD-C572)		
Tensile Strength-min (psi)	1500	D 638, Type IV
Ultimate Elongation-min (percent)	300	D 638, Type IV
Effect of Alkalies (CRD-C572)		
Change in Weight (percent)	+0.25/-0.10	------
Change in Durometer, Shore A	+5	D 2240
Finish Waterstop		
Tensile Strength-min (psi)	1400	D 638, Type IV
Ultimate Elongation-min (percent)	280	D 638, Type IV

F. Accessories:

1. Provide factory made waterstop fabrications for all changes of direction, intersections, and transitions leaving only straight butt joint splices for the field.

2. Provide hog rings or grommets spaced at 12 inches on center along length of waterstop.

3. Provide Teflon coated thermostatically controlled waterstop splicing irons for field butt splices.

2.2 RUBBER WATERSTOPS

A. For bridge structures, neoprene waterstop requirements shall conform to CSS Section 51-1.

2.3 JOINT SEALANT

A. Joint sealant shall be polyurethane polymer designed for bonding to concrete which is continuously submerged in water.

B. Joint sealant material shall meet the following requirements:

Work Life	45 - 90 minutes
Time to Reach 20 Shore "A" Hardness (at 77 degrees F, 200 gr quantity)	24 hours, maximum
Ultimate Hardness	30 - 40 Shore "A"
Tensile Strength	250 psi, minimum
Ultimate Elongation	400 percent, minimum
Tear Resistance (Die C ASTM D 624)	75 pounds per inch of thickness, minimum
Color	Light Gray

For bridge structures, additional requirements of CSS Section 51 shall also apply.

C. All polyurethane sealants for waterstop joints in concrete shall conform to the following requirements:

1. Sealant shall be 2-part polyurethane with the physical properties of the cured sealant conforming to or exceeding the requirements of ASTM C 920 or Federal Specification TT-S-00227 E(3) for 2-part material, as applicable.

2. For vertical joints and overhead horizontal joints, only "non-sag" compounds shall be used; all such compounds shall conform to the requirements of ASTM C 920 Class B, or Federal Specification TT-S-0027 E(3), Type II.

3. For plane horizontal joints, the self-leveling compounds which meet the requirements of ASTM C 920 Class A, or Federal Specification TT-S-0027 E(3), Type I shall be used. For joints subject to either pedestrian or vehicular traffic, a compound providing non-tracking characteristics, and having a Shore "A" hardness range of 25 to 35, shall be used.

4. Primer materials, if recommended by the sealant manufacturer, shall conform to the printed recommendations of the sealant manufacturer.

D. All sealants, wherever shown, or required hereunder shall be Rubbercalk 2101-I or 270 as manufactured by Products Research Company; GS 102 or GS 1102 as manufactured by General Sealants Corp; or an approved equal. For sanitary structures mastic/sealant material shall be Ram Nek Sealant by Henry Co.; Sika Flex 2C, by Sika Corp.

E. Sealants for non-waterstop joints in concrete shall conform to the requirements of Section 07900 - Joint Sealants. Mastic joint sealer shall be a material that does not contain evaporating solvents; that will tenaciously adhere to concrete surfaces; that will remain permanently resilient and pliable; that will not be affected by continuous presence of water and will not in any way contaminate potable water; and that will effectively seal the joints against moisture infiltration even when the joints are subject to movement due to expansion and contraction. The sealer shall be composed of special asphalts or similar materials blended with lubricating and plasticizing agents to form a tough, durable mastic substance containing no volatile oils or lubricants and shall be capable of meeting the test requirements set forth hereinafter, if testing is required by the Engineer.

2.4 PREFORMED JOINT FILLER

A. Preformed joint filler material shall be of the preformed non-extruding type joint filler constructed of cellular neoprene sponge rubber or polyurethane of firm texture. Bituminous fiber type will not be permitted. All non-extruding and resilient-type preformed expansion joint fillers shall conform to the requirements and tests set forth in ASTM D 1752 for Type I, except as otherwise specified herein.

B. Unless otherwise noted, preformed joint filler shall be a non-extruding, resilient, bituminous type conforming to the requirements of ASTM D 1751.

2.5 BACKING ROD

A. Backing rod shall be an extruded closed-cell, polyethylene foam rod. The material shall be compatible with the joint sealant material used and shall have a tensile strength of not less than 40 psi and a compression deflection of approximately 25 percent at 8 psi. The rod shall be 1/8-inch larger in diameter than the joint width except that a one-inch diameter rod shall be used for a 3/4-inch wide joint.

2.6 BOND BREAKER

A. Bond breaker shall be Super Bond Breaker as manufactured by Burke Company, San Mateo, California; Hunt Process 225-TU as manufactured by Hunt Process Co., Santa Fe Springs, California; Select Cure CRB as manufactured by Select Products Co., Upland, California; or an approved equal. It shall contain a fugitive dye so that areas of application will be readily distinguishable.

2.7 BEARING DEVICES AND ELASTOMERIC BEARING PADS

A. Bearing devices and elastomeric bearing pads shall comply with CSS Section 51.

PART 3 - EXECUTION

3.1 GENERAL

A. Unless otherwise shown, waterstops of the type specified herein shall be embedded in the concrete across joints as shown. All waterstops shall be fully continuous for the extent of the joint. Splices necessary to provide such continuity shall be accomplished in conformance to printed instructions of manufacturer of the waterstops. The Contractor shall take suitable precautions and means to support and protect the waterstops during the progress of the work and shall repair or replace at its own expense any waterstops damaged during the progress of the work. All waterstops shall be stored so as to permit free circulation of air around the waterstop material.

B. When any waterstop is installed in the concrete on one side of a joint, while the other half or portion of the waterstop remains exposed to the atmosphere for more than 2 days, suitable precautions shall be taken to shade and protect the exposed waterstop from direct rays of the sun during the entire exposure and until the exposed portion of the waterstop is embedded in concrete.

3.2 SPLICES IN WATERSTOPS

A. Splices in waterstops shall be performed by heat sealing the adjacent waterstop sections in accordance with the manufacturer's printed recommendations and the following requirements:

1. The material not be damaged by heat sealing.

2. The splices have a tensile strength of not less than 60 percent of the unspliced materials tensile strength.

3. The continuity of the waterstop ribs and of its tubular center axis be maintained.

B. Butt joints of the ends of two identical waterstop sections may be made while the material is in the forms.

C. All joints with waterstops involving more than 2 ends to be jointed together, and all joints which involve an angle cut, alignment change, or the joining of 2 dissimilar waterstop sections shall be prefabricated by the Contractor prior to placement in the forms, allowing not less than 24-inch long strips of waterstop material beyond the joint. Upon being inspected and approved, such prefabricated waterstop joint assemblies shall be installed in the forms and the ends of the 24-inch strips shall be butt welded to the straight run portions of waterstop in place in the forms.

3.3 JOINT CONSTRUCTION

A. Setting Waterstops:

1. In order to eliminate faulty installation that may result in joint leakage, particular care shall be taken of the correct positioning of the waterstops during installation. Adequate provisions must be made to support the waterstops during the progress of the WORK and to insure the proper embedment in the concrete. The symmetrical halves of the waterstops shall be equally divided between the concrete pours at the joints. The center axis of the waterstops shall be coincident with the joint openings. Maximum density and imperviousness of the concrete shall be insured by thoroughly working it in the vicinity of all joints.

2. Adequate means shall be provided for anchoring the waterstop in concrete. Waterstops shall be positioned so that they are equally embedded in the concrete on each side of the joint.

3. For bridge structures, waterstops shall conform to CSS Section 51-1.

B. Joint Location:

1. Construction joints, and other types of joints, shall be provided where shown. When not shown, construction joints shall be provided at 25-foot maximum spacing for all concrete construction, subject to the approval of the Engineer, unless noted otherwise. Where joints are shown spaced greater than 25 feet apart, additional joints shall be provided to maintain the 25-foot maximum spacing. The location of all joints, of any type, shall be submitted for acceptance by the Engineer.

C. Joint Preparation:

1. Special care shall be used in preparing concrete surfaces at joints where bonding between two sections of concrete is required. Unless otherwise shown, such bonding will be required at all horizontal joints in walls. Surfaces shall be prepared in accordance with the requirements of Section 03300 - Cast-in-Place Concrete. Except on horizontal wall construction joints, wall to slab joints or where otherwise shown or specified, at all joints where waterstops are required, the joint face of the first pour shall be coated with a bond breaker as specified herein.

D. Construction Joint Sealant:

1. Construction joints in water-bearing floor slabs, and elsewhere as shown, shall be provided with tapered grooves which will be filled with construction joint sealant. The material used for forming the tapered grooves shall be left in the grooves until just before the grooves are cleaned and filled with joint sealant. After removing the forms from the grooves, all laitance and fins shall be removed, and the grooves shall be sand-blasted. The grooves shall be allowed to become thoroughly dry, after which they shall be blown out; immediately there-after, they shall be primed and filled with the construction joint sealant. The primer used shall be supplied by the same manufacturer supplying the sealant. No sealant will be permitted to be used without a primer. Care shall be used to completely fill the sealant grooves. Areas designated to receive a sealant filler shall be thoroughly cleaned, as outlined for the tapered grooves, prior to application of the sealant.

2. Sealant application shall be in accordance with the manufacturer's printed instructions. The surfaces of the groove for the sealant shall not be coated. Concrete next to waterstops shall be placed in accordance with the requirements of Section 03300, Cast-in-Place Concrete.

3. The primer and sealant shall be placed strictly in accordance with the printed recommendations of the manufacturer, taking special care to properly mix the sealant prior to application. All sealant shall cure at least 7 days before the structure is filled with water.

4. All sealant shall be installed by a competent waterproofing specialty contractor who has a successful record of performance in similar installations. Before work is commenced, the crew doing the WORK shall be instructed as to the proper method of application by a representative of the sealant manufacturer.

5. Thorough, uniform mixing of 2-part, catalyst-cured materials is essential; special care shall be taken to properly mix the sealer before its application. Before any sealer is placed, the Contractor shall arrange to have the crew doing the WORK carefully instructed as to the proper method of mixing and application by a representative of the sealant manufacturer.

6. Any joint sealant which after the manufacturer's recommended curing time for the job conditions of the WORK hereunder, fails to fully and properly cure shall be completely removed; the groove shall be thoroughly sandblasted to remove all traces of the uncured or partially cured sealant and primer, and shall be re-sealed with the specified joint sealant. All costs of such removal, joint treatment, re-sealing, and appurtenant work shall be at the expense of the Contractor.

3.4 BEARING DEVICES AND ELASTOMERIC BEARING PADS

A. Bearing devices and elastomeric bearing pads shall comply with CSS Section 51.

END OF SECTION

SECTION 03300
CAST-IN-PLACE CONCRETE

PART 1 - GENERAL

1.1 THE REQUIREMENT

A. The CONTRACTOR shall furnish all materials for concrete in accordance with the provisions of this Section and shall form, mix, place, cure, repair, finish, and do all other work as required to produce finished concrete, in accordance with the requirements of the Contract Documents.

B. The following types of concrete shall be covered in this Section:

1. Structural Concrete: Concrete to be used in all cases except where noted otherwise in the Contract Documents.

2. Sitework Concrete: Concrete to be used for curbs, gutters, sidewalks, pavements, fence and guard post embedment, and underground duct bank encasement unless otherwise shown.

3. Lean Concrete: Concrete to be used for thrust blocks, pipe trench cut-off blocks and cradles, where the preceding items are detailed on the Drawings as unreinforced. Concrete to be used as protective cover for dowels intended for future connection.

1.2 RELATED WORK SPECIFIED ELSEWHERE

A. Section 03100 - Concrete Formwork.

B. Section 03200 - Reinforcement Steel.

C. Section 03250 - Concrete Accessories.

D. Section 03290 - Joints in Concrete.

E. Section 03315 - Grout.

F. Section 03370 - Concrete Curing.

G. Section 07900 - Joint Sealants.

1.3 REFERENCE SPECIFICATIONS, CODES, AND STANDARDS

A. Comply with the reference standards and the Standard Specifications of the GENERAL REQUIREMENTS.

B. Comply with the current provisions of the following Codes and Standards, as applicable.

1. Commercial Standards:

ACI 117	Specification for Tolerances for Concrete Construction and Materials.
ACI 301	Specifications for Structural Concrete.
ACI 305.1	Specification for Hot Weather Concreting.

ACI 306.1	Standard Specification for Cold Weather Concreting.
ACI 318	Building Code Requirements for Structural Concrete.
ACI 347R	Guide to Formwork for Concrete.
ACI 350	Code Requirements for Environmental Engineering Concrete Structures.
ASTM C 31	Standard Practice for Making and Curing Concrete Test Specimens in the Field.
ASTM C 33	Standard Specification for Concrete Aggregates.
ASTM C 39	Standard Test Method for Compressive Strength of Cylindrical Concrete Specimens.
ASTM C 40	Standard Test Method for Organic Impurities in Fine Aggregates for Concrete.
ASTM C 42	Standard Test Method for Obtaining and Testing Drilled Cores and Sawed Beams of Concrete.
ASTM C 88	Standard Test Method for Soundness of Aggregates by Use of Sodium Sulfate or Magnesium Sulfate.
ASTM C 94	Standard Specification for Ready-Mixed Concrete.
ASTM C 109	Standard Test Method for Compressive Strength of Hydraulic Cement Mortars (Using 2-in Cube Specimens).
ASTM C 117	Standard Test Method for Materials Finer than No. 200 Sieve in Mineral Aggregates by Washing.
ASTM C 131	Standard Test Method for Resistance to Degradation of Small-Sized Coarse Aggregate by Abrasion and Impact in the Los Angeles Machine.
ASTM C 136	Standard Test Method for Sieve Analysis of Fine and Coarse Aggregates.
ASTM C 143	Standard Test Method for Slump of Hydraulic-Cement Concrete.
ASTM C 150	Standard Specification for Portland Cement.
ASTM C 157	Standard Test Method for Length Change of Hardened Hydraulic-Cement Mortar and Concrete.
ASTM C 192	Standard Practice for Making and Curing Concrete Test Specimens in the Laboratory.
ASTM C 260	Standard Specification for Air-Entraining Admixtures for Concrete.

ASTM C 289	Standard Test Method for Potential Alkali-Silica Reactivity of Aggregates (Chemical Method).
ASTM C 311	Standard Test Methods for Sampling and Testing Fly Ash or Natural Pozzolans for Use in Portland-Cement Concrete.
ASTM C 494	Standard Specification for Chemical Admixtures for Concrete.
ASTM C 595	Standard Specification for Blended Hydraulic Cements.
ASTM C 618	Standard Specification for Coal Fly Ash and Raw or Calcined Natural Pozzolan for Use in Concrete.
ASTM C 989	Standard Specification for Slag Cement for Use in Concrete and Mortars.
ASTM C 1116	Standard Specification for Fiber-Reinforced Concrete.
ASTM C 1157	Standard Performance Specification for Hydraulic Cement.
ASTM C 1240	Standard Specification for Silica Fume Used in Cementitious Mixtures.
ASTM C 1550	Standard Test Method for Flexural Toughness of Fiber Reinforced Concrete (Using Centrally Loaded Round Panel).
ASTM C 1579	Standard Test Method for Evaluating Plastic Shrinkage Cracking of Restrained Fiber Reinforced Concrete (Using a Steel Form Insert).
ASTM C 1602	Standard Specification for Mixing Water Used in the Production of Hydraulic Cement Concrete.
ASTM C 1603	Standard Test Method for Measurement of Solids in Water-Suggest you add as it relates to ASTM C1602.
ASTM C 1609	Standard Test Method for Flexural Performance of Fiber-Reinforced Concrete (Using Beam With Third-Point Loading).
ASTM D 2419	Standard Test Method for Sand Equivalent Value of Soils and Fine Aggregate.

2. Government Standards:

CSS	Caltrans Standard Specifications.
GWP	Global Warming Potential (maximum acceptable carbon emission limits, established by the California Department of General Services).

1.4 CONTRACTOR SUBMITTALS

A. Submittals shall be made in accordance with GENERAL REQUIREMENTS.

B. The following submittals and specific information shall be provided.

1. Mix Designs: Prior to beginning the WORK, the CONTRACTOR shall submit to the ENGINEER, for review, and acceptance, preliminary concrete mix designs for each class and type of concrete specified herein. The mix designs shall be designed by an independent testing laboratory acceptable to the ENGINEER. All costs related to such mix design shall be borne by the CONTRACTOR.

2. Each concrete mix submittal shall contain the following information, as applicable:

   a. Location and purpose of the mix.
   b. Slump on which the design is based.
   c. Total gallons of water per cubic yard, and the water/cementitious materials ratio (w/cm).
   d. Brand, type, composition and quantity of cement.
   e. Brand type, composition and quantity of fly ash, slag cement, silica fume.
   f. Specific Gravity, source and gradation of each aggregate.
   g. Ratio of fine to total aggregate per cubic yard.
   h. Weight (surface dry) of each aggregate per cubic yard.
   i. Brand, type, and ASTM designation, active chemical ingredients and quantity of each admixture.
   j. Copy of the Building and Safety Research Report Approval for each concrete admixture.
   k. Air content.
   l. Compressive strength based on 7-day and 28-day compression tests, including standard deviation calculations, corroborative data (if applicable), and required average comprehensive strength per ACI 318.
   m. Time of initial and final set.
   n. Certification stamp and signature by a Civil or Structural engineer registered in the State of California, experienced in concrete mix design.
   o. Certificate of Compliance for Cement.
   p. Concrete pour sequence.
   q. Buy Clean California Act.

      1.) For project specifications that include GR Section 1601, Buy Clean California Act, bidders shall submit current Environmental Product Declarations (EPDs) for each concrete mix design, from the originating ready-mix plant used in the project. When material comes from different plants, an EPD will be required for each plant from which the material will be obtained.
      2.) An EPD must conform to the following:

         a) Shall be facility-specific manufacturer/plant EPD.
         b) Be independently verified in accordance with ISO 14025 (Type III).
         c) Be developed according to the guidelines of the applicable Product Category Rule (PCR), as identified by the Department of General Services, State of California.
         d) Have a valid date that has not expired.
         e) Shall not exceed the Global Warming Potential (GWP) as required by GR Section 1601.

      3.) EPD shall be submitted concurrently with each mix submittal for review and approval.

3. Certified Delivery Tickets: Where ready-mix concrete is used, the CONTRACTOR shall provide certified weighmaster delivery tickets at the time of delivery of each load of concrete. Each certificate shall show the public weighmaster's signature, and the total quantities, by weight of

cement, sand, each class of aggregate, admixtures, and the amounts of water in the aggregate and added at the batching plant as well as the amount of water allowed to be added at the site for the specific design mix. Each certificate shall, in addition, state the mix number, total yield in cubic yards, and the time of day, to the nearest minute, corresponding to when the batch was dispatched, when it left the plant, when it arrived at the job, the time that unloading began, and the time that unloading was finished.

4. When a water reducing admixture is to be used, the CONTRACTOR shall furnish mix designs for concrete both with and without the admixture.

5. The CONTRACTOR shall furnish a Certificate of Compliance signed by the supplier identifying the type of fly ash and stating that the fly ash complies with ASTM C 618 and these Specifications, together with all supporting test data prior to the use of the fly ash the sample represents. The supporting data shall also contain test results confirming that the fly ash in combination with the cement and water to be used meets all strength requirements and is compatible with air-entraining agents and other admixtures.

6. The CONTRACTOR shall submit to the ENGINEER for review the design mix for fly ash concrete together with the design mix for Portland cement (non-fly ash) concrete as specified in this Section.

1.5 QUALITY ASSURANCE

A. Laborers: Use adequate number of skilled laborers who are thoroughly trained and experienced in the necessary crafts and completely familiar with the specified requirements and the methods needed for proper performance of the Work of this Section.

B. Compliance with Regulations: All materials shall comply with the current rules and regulations of the local air quality management district, with the rules regarding volatile organic compounds, and with FDA rules and regulations for dangerous substances in construction products.

C. Concrete Manufacturer: Furnish concrete from licensed commercial ready-mix concrete plants conforming to ASTM C94 and approved by City of Los Angeles Department of Building and Safety. Requirements herein govern when exceeding ASTM C94.

D. Continuous Inspection: Construct structural concrete exceeding 2,500 psi compressive strength under continuous inspection of DEPUTY INSPECTOR. Obtain inspection and approval of forms and reinforcing by CONTRACTOR's Independent Testing/Inspection Laboratory three (3) working days before placing structural concrete in order to be verified by ENGINEER.

E. Tests on component materials and for compressive strength and shrinkage of concrete will be performed as specified herein. Test for determining slump will be in accordance with the requirements of ASTM C 143.

F. The cost of all laboratory tests on cement, aggregates, and concrete compressive strength, will be borne by the CITY. However, the CONTRACTOR shall be responsible for all other required tests, and shall be charged for the cost of any additional tests and investigation on work performed which does not meet the specifications.

G. Concrete for testing shall be supplied by the CONTRACTOR at no cost to the CITY, and the CONTRACTOR shall provide assistance and facilities to the INSPECTOR in obtaining samples, and disposal and cleanup of excess material. The CONTRACTOR shall provide the test cylinders, as described in item 1.5.H, to the INSPECTOR for the required testing.

H. Field Compression Tests:

1. Compression test specimens will be taken during construction from the first placement of each concrete mix used and at intervals thereafter as selected by the INSPECTOR to insure continued compliance with these specifications. Each set of test specimens will be a minimum of 4 cylinders.

2. Compression test specimens for concrete shall be made in accordance with ASTM C 31. Specimens shall be 6-inch diameter by 12-inch high cylinders.

3. Compression tests shall be performed in accordance with ASTM C 39. Two 6"x12" test cylinders will be tested at 7 days as necessary and two at 28 days. Any remaining cylinders will be held to verify test results, if needed.

I. Evaluation and acceptance of Compressive Strength Concrete shall be based on the following criteria:

1. Concrete shall be sampled and tested in accordance with the ASTM standards stated in Subsection 1.3.B.1.

2. Acceptance of concrete placed shall be based on 28-day compressive strength test results. A 28-day compressive strength test shall consist of the average compressive strength of two 6"x12" concrete test cylinders fabricated from a single load of fresh concrete except that, if a cylinder should show evidence of improper handling, molding, or testing, said cylinder shall be discarded and the compressive strength test shall then consist of the remaining cylinder.

3. Concrete compressive strength tests representing concrete poured-in-place, shall attain the 28-day compressive strength specified in the specifications or as shown on the plans.

4. In-place concrete represented by a compressive cylinder strength test failing to meet the specified 28-day compressive strength shall be removed from the work at no cost to the CITY. Also, the CONTRACTOR shall at its own expense make any corrective changes in the mix deemed necessary by the ENGINEER. The changes in the mix proportions or placement procedures shall be approved by the ENGINEER prior to the placement of any additional concrete subsequent to a failing compressive strength test.

5. As an alternative to the removal of concrete represented by a failed cylinder compressive strength test and subject to the approval of the ENGINEER, the concrete represented by the failed compressive strength cylinder test or tests may be cored in place. The corings shall be completed no later than 10 days from notification of failure by the ENGINEER. The cores shall be taken by the CONTRACTOR in the presence of the INSPECTOR and tested at the CONTRACTOR's expense in accordance with ASTM C 42 by a certified laboratory acceptable to the INSPECTOR. The cores shall be 4 inch diameter (min.) unless otherwise directed by the ENGINEER. At least three cores shall be taken in each area represented by a failed 28-day concrete compressive strength cylinder test. Unless otherwise directed by the ENGINEER, the cores shall be tested wet following a 40-hour submergence. If each core tests at least 85 percent of the specified 28-day compressive strength or greater, the concrete represented may be accepted provided the CONTRACTOR accepts the payment provisions stated below. Concrete represented by failing core tests shall not be paid for and shall be removed by the CONTRACTOR from the work at no cost to the CITY.

6. Payment to the CONTRACTOR for concrete accepted by the ENGINEER based on core test results but represented by failing compressive cylinder test results shall be reduced as follows:

    a. When the result of a single compressive cylinder strength test is less than the specified 28-day compressive strength but 95 percent or more of the 28-day compressive strength, the CONTRACTOR shall pay the CITY $15 per cubic yard for each in-place cubic yard of concrete represented by the deficient compressive strength cylinder test as determined by the actual sampling interval; and.
    b. When the result of a single compressive strength cylinder test is less than 95 percent of the specified 28-day compressive strength but is acceptable based on core test results taken in accordance with Subsection 1.5.I.5, the CONTRACTOR shall pay the CITY $20 per cubic yard for each in-place cubic yard of concrete represented by the deficient compressive strength cylinder test as determined by the actual sampling interval.

J. Shrinkage Tests:

1. Drying shrinkage tests shall be provided by the CONTRACTOR for the trial batch specified in the Paragraph in Part 2 entitled "Trial Batch and Laboratory Tests," and during construction to insure continued compliance with these Specifications.

2. Drying shrinkage specimens shall be 4-inch by 4-inch by 11-inch prisms with an effective gage length of 10 inches, fabricated, cured, dried and measured in accordance with ASTM C 157 modified as follows: specimens shall be removed from molds at an age of 23 ±1 hours after trial batching, shall be placed immediately in water at 70 degrees F ±3 degrees F for at least 30 minutes, and shall be measured within 30 minutes thereafter to determine original length and then submerged in saturated lime water at 73 degrees F ±3 degrees F. Measurement to determine expansion expressed as a percentage of original length shall be made at age 7 days. This length at age 7 days shall be the base length for drying shrinkage calculations ("0" days drying age). Specimens then shall be stored immediately in a humidity control room maintained at 73 degrees F ±3 degrees F and 50 percent ±4 percent relative humidity for the remainder of the test. Measurements to determine shrinkage expressed as percentage of base length shall be made and reported separately for 7, 14, 21, and 28 days of drying after 7 days of moist curing.

3. The drying shrinkage deformation of each specimen shall be computed as the difference between the base length (at "0" days drying age) and the length after drying at each test age. The average drying shrinkage deformation of the specimens shall be computed to the nearest 0.0001 at each test age. If the drying shrinkage of any specimen departs from the average of that test age by more than 0.0004-inch, the results obtained from that specimen shall be disregarded. Results of the shrinkage test shall be reported to the nearest 0.001 percent of shrinkage. Compression test specimens shall be taken in each case from the same concrete used for preparing drying shrinkage specimens. These tests shall be considered a part of the normal compression tests for the project. Allowable shrinkage limitations shall be as specified in Part 2, herein.

K. Construction Tolerances: The CONTRACTOR shall set and maintain concrete forms and perform finishing operations so as to ensure that the completed work is within the tolerances specified in Section 03100 "Concrete Formwork". Surface defects and irregularities are defined as finishes and are to be distinguished from tolerances.

L. For each class of fly ash, all testing and sampling procedures shall conform with these Specifications and ASTM C 311, including the restriction that one sample weighing 4 pounds shall be taken from at least each 200 tons of fly ash supplied.

M. Separate storage facilities shall be provided for fly ash and other supplementary cementitious materials (SCM). All SCM shall be stored in such a manner as to permit ready access for the purpose of inspection and sampling and suitably protected against contamination or moisture. Should any SCM show evidence of contamination or moisture or be otherwise unsuitable, the INSPECTOR may reject it and require that it be removed from the site. Each SCM used in concrete for this project shall be from the same source.

PART 2 - PRODUCTS

2.1 CONCRETE MATERIALS

A. Materials shall be delivered, stored, and handled so as to prevent damage by water or breakage. Only one brand of cement shall be used. Cement reclaimed from cleaning bags or leaking containers shall not be used. All cement shall be used in the sequence of receipt of shipments.

B. All materials furnished for the work shall comply with the requirements of ACI 301, as applicable. For bridge structures, materials for concrete shall conform to Section 90-2 to 90-4 of CSS.

C. Storage of materials shall conform to the requirements of ACI 301.

D. Materials for concrete shall conform to the Standard Specifications and the following requirements.

1. Concurrent with strength design criteria, concrete shall also be proportioned to provide the requisite durability to satisfy the exposure conditions imposed by either environment and/or service. Durability, in this context, refers to the ability of the concrete to resist deterioration from the environment or service in which it is placed. Concrete proportioned in accordance with ACI 318, or ACI 350 for sanitary structures, chapter 4, Durability Requirements, will meet this criteria.

2. Cementitious Materials:

a. Portland Cement shall conform to ASTM C 150, Type II or ASTM C595 Type IL.

b. Blended Cement shall conform to ASTM C595, Type IL, Moderate Sulfate Resistant (MS).
c. Supplementary Cementitious Materials:

1.) Fly ash shall conform to ASTM C 618, Class F or C.
2.) Slag cement shall conform to ASTM C 989, Grade 100 or 120.
3.) Silica fume shall conform to ASTM C 1240, and shall be MASTER BUILDERS SOLUTIONS Corporation's.
4.) MasterLife SF100, GCP Applied Technologies (formerly W. R. Grace) F10KD, or approved equal.
5.) Metakaolin shall conform to ASTM C 618, Class N, and shall be MASTER BUILDERS SOLUTIONS' Kaolin's (part of MASTER BUILDERS SOLUTIONS Corporation) MetaMax, GCP Applied Technologies (formerly W. R. Grace) HRMK 100, or approved equal.

3. Aggregates shall be obtained from pits acceptable to the INSPECTOR, shall be non-reactive, and shall conform to ASTM C 33. Lightweight sand for fine aggregate will not be permitted.

a. When tested in accordance with ASTM C 289, the ratio of silica released to reduction in alkalinity shall not exceed 1.0.
b. When tested in accordance with ASTM C 40, the fine aggregate shall produce a color in the supernatant liquid no darker than the reference standard color solution.
c. When tested in accordance with ASTM C 131, the coarse aggregate shall show a loss not exceeding 42 percent after 500 revolutions, or 10.5 percent after 100 revolutions.
d. When tested in accordance with ASTM C 88, the loss resulting after five cycles shall not exceed 10 percent for fine or coarse aggregate when using sodium sulfate.
e. When tested in accordance with ASTM C 117, materials finer than No. 200 sieve shall not exceed 1% for gravel, and 1.5% for crushed aggregate.
f. When tested in accordance with ASTM D 2419, the California sand equivalent values operating range shall not be below 71%.

4. Ready-mixed concrete shall conform to the requirements of ASTM C 94.

a. Water for mixing shall conform to ASTM C 1602 and be clean and free from objectionable quantities of silty organic matter, alkali, salts, and other impurities. The use of qualifying recycled water is encouraged**.** Mixing water that contains non-potable water should comply with ASTM C1602 Section 4 and Section 5 including Table 1 and Table 2.

5. Admixtures: The ENGINEER may require the use of admixtures or the CONTRACTOR may propose to use admixtures to control the set, effect water reduction, increase workability or enhance durability. In either case, the addition of an admixture shall be at the CONTRACTOR's expense. The use and continued use of an admixture shall be approved by the ENGINEER. Admixtures specified herein, other than calcium chloride, shall conform to the requirements of ASTM C 494 or other standards specified in this Section. The required quantity of cement shall be used in the mix regardless of whether or not an admixture is used. Admixtures shall contain no free chloride ions, be non-toxic after 30 days, and shall be compatible with and made by the same manufacturer as the air entraining admixture.

6. These admixtures shall not be used in greater doses than those recommended by the manufacturer or permitted by the ENGINEER. The permitted dosage of the admixture shall not exceed that which will result in an increase in the drying shrinkage of the concrete in excess of 20 percent when used in precast or prestressed concrete, or 10 percent when used in any other structural concrete. The strength of concrete containing the admixture in the amount proposed shall, at the age of 48 hours and longer be not less than that of similar concrete without the admixture. The admixture shall not adversely affect the specified air content, unless permitted by the ENGINEER.

   a. Set controlling admixture shall be either with or without water-reducing properties. Where the air temperature at the time of placement is expected to be consistently over 80 degrees F, a set retarding admixture conforming to ASTM C 494, Type B or D, such as Sika Corporation's Plastiment, MASTER BUILDERS SOLUTIONS Corporation's MasterSet R Series or MasterSet DELVO Series, GCP applied Technologies (formerly W. R. Grace), Recover or Daratard 17 or an approved equal shall be used. Where the air temperature at the time of placement is expected to be consistently under 40 degrees F, a set accelerating admixture conforming to ASTM C 494 Type C or E, such as Sika Corporation's Plastocrete 161FL, MASTER BUILDERS SOLUTIONS Corporation's MasterSet AC 534 or MasterSet FP 20, GCP applied Technologies (formerly W. R. Grace), Daraset 400 or Polarset or an approved equal shall be used.

   b. Normal and mid-range water reducing admixtures shall conform to ASTM C 494, Type A, and shall be MASTER BUILDERS SOLUTIONS Corporation's MasterPozzolith Series, MasterPolyheed series, GCP applied Technologies (formerly W. R. Grace), ADVA series, Zyla series, WRDA series or approved equal. The quantity of admixture used and the method of mixing shall be in accordance with the manufacturer's instructions and recommendations.

   c. High range water reducer shall conform to ASTM C 494, Type F or G.

   d. If the high range water reducing admixture is added to the concrete at the batch plant, it shall be, ADVA series ADVA 190, ADVA 198, ADVA 140M as manufactured by GCP Applied Technologies (formerly W. R. Grace) MasterRheobuild 1000, MasterGlenium Series, or PS 1466 as manufactured by MASTER BUILDERS SOLUTIONS Corporation; or an approved equal. High range water reducer shall be added to the concrete after all other ingredients have been mixed and initial slump has been verified.

   e. If the high range water reducer is added to the concrete at the job site, it shall be used in conjunction with a normal water reducer and shall be MasterPozzolith 700 or MasterPozzolith 322 and MasterGlenium 7500 or MasterGlenium 3030, as manufactured by MASTER BUILDERS SOLUTIONS Corporation; ADVA series ADVA 190, ADVA 198, ADVA 140M and Zyla Series, Zyla 625 or WRDA series, WRDA 64 as manufactured by GCP Applied technologies (formerly W. R. Grace); or an approved equal. Concrete shall have a slump of 3-inches ± 1/2-inch prior to adding the high range water reducing admixture at the job site. Slump shall not exceed 9 inches for concrete after addition of high-range water-reducing admixture. The high range water reducing admixture shall be accurately measured and pressure injected into the mixer as a single dose by an experienced technician. A standby system shall be provided and tested prior to each day's operation of the job site system.

   f. Concrete shall be mixed at mixing speed for a minimum of 30 mixer revolutions after the addition of the high range water reducer.

g. Air-entraining admixture meeting the requirements of ASTM C 260, such as MASTER BUILDERS SOLUTIONS Corporation's MasterAir Series or, GCP Applied Technologies (formerly W. R. Grace Daravair or Darex series, approved equal, shall be used. Sufficient air-entraining agent shall be used to provide a total air content of 3 to 4 percent; provided that, when the mean daily temperature in the vicinity of the worksite falls below 40 degrees F for more than one day, the total air content provided shall be 5 to 6 percent. The CITY reserves the right, at any time, to sample and test the air-entraining agent received on the job by the CONTRACTOR. The air-entraining agent shall be added to the batch in a portion of the mixing water. The solution shall be batched by means of a mechanical batcher capable of accurate measurement.

h. Workability-retaining admixture shall conform to ASTM C 494, Type S, shall retain concrete workability without affecting time of setting or early age strength development, and shall be MASTER BUILDERS SOLUTIONS Corporation's MasterSure Z60, GCP Applied Technologies (formerly W. R. Grace) ADVA XT2, or approved equal.

i. Shrinkage-reducing admixture shall conform to ASTM C 494, Type S, and shall be MASTER BUILDERS SOLUTIONS Corporation's MasterLife SRA 20, MasterLife CRA 007, GCP Applied Technologies (formerly W. R. Grace) Eclipse series or approved equal.

j. Calcium Chloride: Except as otherwise provided herein, calcium chloride will not be permitted to be used in concrete.

2.2 CURING MATERIALS

A. Materials for curing concrete shall conform to Section 03370 "Curing Concrete", Part 2.

2.3 NON-WATERSTOP JOINT MATERIALS

A. Materials for non-waterstop joints in concrete shall conform to Section 03290 - Joints In Concrete, Part 2.

2.4 MISCELLANEOUS MATERIALS

A. Floor sealer/hardener shall be a colorless, aqueous solution of zinc and/or magnesium fluorosilicate or of sodium silicate, and shall be as manufactured by MASTER BUILDERS SOLUTIONS Corporation, W.R. Grace Co., or an approved equal. The solution shall be delivered ready for use in the manufacturer's original sealed containers. Each gallon of the fluorosilicate solution shall contain not less than 2 pounds of crystals.

B. Dampproofing agent shall be an asphalt emulsion, such as MasterSeal 610, MasterSeal 614 or MasterSeal 615 (formerly Hydrocide 600, Hydrocide 700 & Hydrocide 700B) by MASTER BUILDERS SOLUTIONS Corporation, GCP Applied Technologies (formerly W. R. Grace) Darapel, Flintkote C-13-E Foundation Coating, or an approved equal.

C. Epoxy adhesives shall be per the following products for the applications specified:

1. For bonding freshly-mixed, plastic concrete to hardened concrete, Sikadur Hi-Mod Epoxy Adhesive, as manufactured by Sika Corporation; MasterEmaco ADH 326 (formerly Concresive Liquid LPL) as manufactured by MASTER BUILDERS SOLUTIONS Corporation; or an approved equal.

D. Drypack: Field mixture of 1 part Portland cement to 2 parts fine aggregate mixed to a damp consistency such that a ball molded in the hands will stick together and hold its shape. At CONTRACTOR's option, the specified admixture may be added for increased workability at lower water/cement ratio. In lieu of field mixing, CONTRACTOR may use factory mixed drypack material, such as MASTER BUILDERS SOLUTIONS Corporation "MasterFlow 100" or Euclid "Euco Dry Pack Grout", or an approved equal.

E. Expansion Joint Filler: Asphalt impregnated fiber or non-extruding foam type, conforming to ASTM D994 and D1751, or D1752.

F. Construction Joint Materials: "Key-Kold", "Kwik-Joint" of profiles indicated, or an approved equal.

G. Bonding Agent: "Weld-Crete", manufactured by Larsen Products Co. or "MasterEmaco ADH" Series (formerly Concresive Series), as manufactured by MASTER BUILDERS SOLUTIONS Corporation, or an approved equal.

2.5 CONCRETE DESIGN REQUIREMENTS

A. General: Concrete shall be composed of cement, SCM, admixtures, aggregates and water. These materials shall be of the qualities specified. The exact proportions in which these materials are to be used for different parts of the work will be determined during the trial batch. In general, the mix shall be designed to produce a concrete capable of being deposited so as to obtain maximum density and minimum shrinkage and, where deposited in forms, to have good consolidation properties and maximum smoothness of surface. Mix designs with more than 41 percent of sand of the total weight of fine and coarse aggregate shall not be used. The aggregate gradations shall be formulated to provide fresh concrete that will not promote rock pockets around reinforcing steel or embedded items. The proportions shall be changed whenever necessary or desirable to meet the required results at no additional cost to the CITY. All changes shall be subject to review by the ENGINEER.

B. W/cm and Compressive Strength: The minimum compressive strength and cement content of concrete shall be not less than that specified in the following tabulation.

Type of Work	Min. 28-Day Compressive Strength (psi)	Aggregate Gradation	Cement per cu yd (sacks)	Max w/cm (by weight)
Structural Concrete*				
Structures:	4,500	C	7.0	0.42
Sitework concrete:	2,500	C	5.5	0.50
Lean concrete:	2,000	C	4.8	0.71

Note: One sack of cement equals 94 lb.
* Use "B" Aggregate gradation when placing conditions permit.
** For Slabs on grade, maximum w/cm shall be 0.45.

C Adjustments to Mix Design: The mixes used shall be changed whenever such change is necessary or desirable to secure the required strength, density, workability, and surface finish and the CONTRACTOR shall be entitled to no additional compensation because of such changes.

D. Fly ash/pozzolan may be used per requirements of the Standard Specifications, when approved by the ENGINEER as a partial cement replacement in concrete as follows:

1. Fly ash shall replace not more than 20 percent by weight of the Portland cement in the design mix. The design mix shall contain a minimum of 7 sacks of cement per cubic yard before the replacement is made.

2. Fly ash for hydraulic/liquid containing structures shall be Class F fly ash only. Fly ash for all other structures shall be Class C or F fly ash.

2.6 CONSISTENCY

The quantity of water entering into a batch of concrete shall be just sufficient, with a normal mixing period, to produce a concrete which can be worked properly into place without segregation, and which can be compacted by the vibratory methods herein specified to give the desired density, impermeability and smoothness of surface. Subject to the w/c ratio requirements of section 2.5, the quantity of water shall be changed as necessary, with variations in the nature or moisture content of the aggregates, to maintain uniform production of a desired consistency. The consistency of the concrete in successive batches shall be determined by slump tests in accordance with ASTM C 143. The slumps shall be as follows:

Part of Work	Slump (in)
With high range water reducer added	9-inches max
Other work	per Standard Specifications

2.7 TRIAL BATCH AND LABORATORY TESTS

A. Before placing any concrete, a Department of Building and Safety certified testing laboratory approved by the ENGINEER shall prepare, within 30 calendar days after the date of the Notice to Proceed, a trial batch of each concrete mix, based on the preliminary concrete mixes submitted by the CONTRACTOR. During the trial batch the aggregate proportions may be adjusted by the testing laboratory using the two coarse aggregate size ranges to obtain the required properties. If one size range produces an acceptable mix, a second size range need not be used. Such adjustments shall be considered refinements to the mix design and shall not be the basis for extra compensation to the CONTRACTOR. All concrete shall conform to the requirements of this Section, whether the aggregate proportions are from the CONTRACTOR's preliminary mix design, or whether the proportions have been adjusted during the trial batch process. The trial batch shall be prepared using the aggregates, cement and admixture proposed for the project. The trial batch materials shall be of a quantity such that the testing laboratory can obtain 3 drying shrinkage, and 10 compression test specimens from each batch. The cost of not more than 3 laboratory trial batch tests for each specified concrete strength shall be borne by the CONTRACTOR. Any additional trial batch testing required shall be performed at the expense of the CONTRACTOR.

The trial batch procedure may be waived when test data of prior performance of the proposed mix design, performed by a Department of Building and Safety certified testing laboratory, is presented by the CONTRACTOR and approved by the ENGINEER.

The requirements of this section may be waived for concrete mixes specified by the Class per the Standard Specifications.

B. The determination of compressive strength will be made by testing 6-inch diameter by 12-inch high cylinders; made, cured and tested in accordance with ASTM C 192 and ASTM C 39. Five compression test cylinders shall be tested at 7 days and 5 at 28 days. The average compressive strength for the 5 cylinders tested at 28 days for any given trial batch shall not be less than the appropriate sections of ACI 318 of the specified compressive strength.

C. A sieve analysis of the combined aggregate for each trial batch shall be performed according to the requirements of ASTM C 136. Values shall be given for percent passing each sieve.

2.8 SHRINKAGE LIMITATION

A. The maximum concrete shrinkage for specimens cast in the laboratory from the trial batch, as measured at 21-day drying age or at 28-day drying age shall be 0.036 percent or 0.042 percent, respectively. The CONTRACTOR shall only use a mix design for construction that has first met the trial batch shrinkage requirements. Testing for shrinkage but be performed as one of the first items of work.

2.9 MEASUREMENT OF CEMENT AND AGGREGATE

The amount of cement and of each separate size of aggregate entering into each batch of concrete shall be determined by direct weighing equipment furnished by the CONTRACTOR and acceptable to the ENGINEER; provided that, where batches are so proportioned as to contain an integral number of conventional sacks of cement, and the cement is delivered at the mixer in the original unbroken sacks, the weight of the cement contained in each sack may be taken without weighing as 94 pounds.

2.10 MEASUREMENT OF WATER

The quantity of water entering the mixer shall be measured by a suitable water meter or other measuring device of a type acceptable to the ENGINEER and capable of measuring the water in variable amounts within a tolerance of one percent. The water feed control mechanism shall be capable of being locked in position so as to deliver constantly any specified amount of water to each batch of concrete, and the meter shall include a set-back register with a readily visible vertical face and double hands indicating in cubic feet and decimals thereof. A positive quick-acting valve shall be used for a cut-off in the water line to the mixer. The operating mechanism must be such that leakage will not occur when the valves are closed.

2.11 READY-MIXED CONCRETE

A. At the CONTRACTOR's option, ready-mixed concrete may be used meeting the requirements as to materials, batching, mixing, transporting, and placing as specified herein and in accordance with ASTM C 94, including the following supplementary requirements.

B. Ready-mixed concrete shall be delivered to the site of the work, and discharge shall be completed within 90 minutes after the addition of the cement to the aggregates or before the drum has been revolved 250 revolutions, whichever is first. In hot weather, or under conditions contributing to quick stiffening of the concrete, the ready-mixed concrete shall be discharged before the temperature of the concrete exceeds 90 degrees F.

C. Truck mixers shall be equipped with electrically-actuated counters by which the number of revolutions of the drum or blades may be readily verified. The counter shall be of the re-settable, recording type, and shall be mounted in the driver's cab. The counters shall be actuated at the time of starting mixers at mixing speeds.

D. Each batch of concrete shall be mixed in a truck mixer for not less than 70 revolutions of the drum or blades at the rate of rotation designated by the manufacturer of equipment. Additional mixing, if any, shall be at the speed designated by the manufacturer of the equipment as agitating speed. All materials including mixing water shall be in the mixer drum before actuating the revolution counter for determining the number of revolution of mixing.

E. Truck mixers and their operation shall be such that the concrete throughout the mixed batch as discharged is within acceptable limits of uniformity with respect to consistency, mix, and grading. If slump tests taken at approximately the 1/4 and 3/4 points of the load during discharge give slumps differing by more than 2-inches when the specified slump is more than 3-inches, the mixer shall not be used on the work unless the causing condition is corrected and satisfactory performance is verified by additional slump tests. All mechanical details of the mixer, such as water measuring and discharge apparatus, condition of the blades, speed of rotation, general mechanical condition of the unit, and clearance of the drum, shall be checked before a further attempt to use the unit will be permitted.

F. Each batch of ready-mixed concrete delivered at the job site shall be accompanied by a certified weighmaster delivery ticket furnished to the INSPECTOR in accordance with the Paragraph in Part 1 entitled "Certified Delivery Tickets".

G. The use of non-agitating equipment for transporting ready-mixed concrete will not be permitted. Combination truck and trailer equipment for transporting ready-mixed concrete will not be permitted. The quality and quantity of materials used in ready-mixed concrete and in batch aggregates shall be subject to continuous inspection at the batching plant by the INSPECTOR.

H. Mixing and Transporting of concrete for bridge structures shall comply with Section 90-6 of CSS.

PART 3 - EXECUTION

3.1 PROPORTIONING AND MIXING

A. Proportioning: Proportioning of the concrete mix shall conform to the requirements of Chapter 3 "Proportioning" of ACI 301; provided that the maximum slump for any concrete shall not exceed 4-inches except when the use of high range water reducer is permitted which increases the maximum slump to 8-inches. Proportioning for bridge structures shall comply with Section 90-5 of the CSS.

B. Mixing: Mixing of concrete shall conform to the requirements of Chapter 7 of said ACI 301 Specifications and SSPWC. Whichever is most stringent shall apply.

C. Slump: Maximum slumps shall be as specified herein in Section 2.6.

D. Retempering: Retempering of concrete or mortar which has partially hardened will not be permitted.

3.2 PREPARATION OF SURFACES FOR CONCRETING

A. General: Wet wood forms sufficiently to tighten up cracks. Wet other materials sufficiently to reduce adsorption and to help maintain concrete workability. Earth surfaces shall be thoroughly wetted by sprinkling, 24 hours prior to the placing of any concrete, and these surfaces shall be kept moist by frequent sprinkling up to the time of placing concrete thereon. The surface shall be free from standing water, mud, and debris at the time of placing concrete.

B. Vapor Barrier: Install under interior floor slabs on grade. Lap joints 6" in the direction of concrete spreading and tape seal. Seal the joints at walls and around penetrations with tape. Cover barrier with 2" layer of clean damp sand.

C. Screeds: Set screeds at walls and maximum 8' centers between. Set to provide level floor. Check with an instrument level, transit, or laser during placing operation to maintain level floor.

D. Screeds Over Vapor Barrier: Use weighted pad or cradle type screeds and do not drive stakes through the vapor barrier. Check with an instrument level, transit, or laser.

E. Metal Floor Decking: Verify that decking joints are sealed and there are no openings or voids that will permit concrete leakage.

F. Expansion Joint Filler: Install where slabs abut buildings and elsewhere as indicated. Install full depth of concrete with top level with finished surface of concrete.

G. Joints in Concrete: Concrete surfaces upon or against which concrete is to be placed, where the placement of the old concrete has been stopped or interrupted so that, as determined by the ENGINEER, the new concrete cannot be incorporated integrally with that previously placed, are defined as construction joints. The surfaces of horizontal joints shall be given a compacted, roughened surface for good bond. Except where the Drawings call for joint surfaces to be coated, the joint surfaces shall be cleaned of all laitance, loose or defective concrete, and foreign material. Such cleaning shall be accomplished by sandblasting followed by thorough washing. All pools of water shall be removed from the surface of construction joints before the new concrete is placed.

H. After the surfaces have been prepared all approximately horizontal construction joints shall be covered with a layer of mortar approximately two-inch thick, or as shown on the plans. The mortar shall have the same proportions of cement and sand as the regular concrete mixture. The water-cement ratio of the mortar in place shall not exceed that of the concrete to be placed upon it, and the consistency of the mortar shall be suitable for placing and working in the manner hereinafter specified. The mortar shall be spread uniformly and shall be worked thoroughly into all irregularities of the surface. Wire brooms shall be used where possible to scrub the mortar into the surface. Concrete shall be placed immediately upon the fresh mortar. When casting deep walls (more than 6 feet high) over slabs or footings, in lieu of the two-inch thick mortar, a 6-inch lift of a rich pea gravel mix with the same water-cement ratio as the wall concrete shall be placed and spread uniformly. Wall concrete shall follow immediately and shall be placed upon the fresh pea gravel mix.

I. Embedded Items: No concrete shall be placed until all formwork, installation of parts to be embedded, reinforcement steel, and preparation of surfaces involved in the placing have been completed and ACCEPTED by the INSPECTOR at least 24 hours before placement of concrete. All surfaces of forms and embedded items that have become encrusted with dried grout from concrete previously placed shall be cleaned of all such grout before the surrounding or adjacent concrete is placed.

J. Conduits and Sleeves:

1. Locate so as not to reduce the strength of construction. Do not place pipes, except conduits in a slab of less than 3-1/2" thickness.

2. In supported concrete slabs, do not bury conduit having any outside diameter greater than 33% of the thickness of the slab. Increase slab thickness locally to meet this requirement.

3. Do not place conduit between the bottom of reinforcing steel and the bottom of supported slab.

4. In placing conduits at slabs on earth, place below the reinforcement, and encase in concrete by increasing thickness of the slab locally to at least 3" of concrete around the conduit on all sides.

K. All inserts or other embedded items shall conform to the requirements herein.

L. All reinforcement, anchor bolts, sleeves, inserts, and similar items shall be set and secured in the forms where shown or by shop drawings and shall be acceptable to the INSPECTOR before any concrete is placed. Accuracy of placement is the responsibility of the CONTRACTOR.

M. Where concrete is to be cast against old concrete, (greater than 60 days of age), the surface of the old concrete shall be thoroughly cleaned and roughened by sand-blasting, exposing the aggregate. In concrete shear-walls, suspended slabs and roof slabs, the interface surface at construction joints shall be roughened to a full amplitude of one quarter inch. The hardened surface shall be cleaned of all latent foreign material and washed clean, prior to the application of an epoxy bonding agent.

N. Concrete shall not be placed in any structure until all water entering the space to be filled with concrete has been properly cut off or has been diverted by pipes, or other means, and carried out of the forms, clear of the work. Concrete shall not be deposited underwater nor shall the CONTRACTOR allow still water to rise on any concrete until the concrete has attained its initial set. Water shall not be permitted to flow over the surface of any concrete in such manner and at such velocity as will injure the surface finish of the concrete. Pumping or other necessary dewatering operations for removing ground water, if required, will be subject to the review of the ENGINEER.

O. Corrosion Protection: Pipe, conduit, dowels, and other ferrous items required to be embedded in concrete construction shall be so positioned and supported prior to placement of concrete that there will be a minimum of 2-inches clearance between said items and any part of the concrete reinforcement. Securing such items in position by wiring or welding them to the reinforcement will not be permitted.

P. Openings for pipes, inserts for pipe hangers and brackets, and the setting of anchors shall, where practicable, be provided for during the placing of concrete.

Q. Anchor bolts shall be accurately set, and shall be maintained in position by templates while being embedded in concrete.

R. Cleaning: The surfaces of all metalwork to be in contact with concrete shall be thoroughly cleaned of all dirt, grease, loose scale and rust, grout, mortar, and other foreign substances immediately before the concrete is placed.

3.3 HANDLING, TRANSPORTING, AND PLACING

A. General: Do not place concrete during rain or adverse weather conditions without means to prevent all damage. Conform to requirements specified hereinafter whenever concrete placement is required during cold or hot weather. Placing of concrete shall conform to the applicable requirements of ACI 301 and the requirements of this Section.

B. Non-Conforming Work or Materials: Concrete which upon or before placing is found not to conform to the requirements specified herein shall be rejected and immediately removed from the work. Concrete which is not placed in accordance with these Specifications, or which is of inferior quality, shall be removed and replaced by and at the expense of the CONTRACTOR.

C. Concrete shall not be placed except in the presence of duly authorized representative of the INSPECTOR. The CONTRACTOR shall notify the INSPECTOR in writing at least 48 hours in advance of placement of any concrete.

D. Placement in Wall Forms: Concrete shall not be dropped through reinforcement steel or into any deep form, whether reinforcement is present or not, causing separation of the coarse aggregate from the mortar on account of repeatedly hitting rods or the sides of the form as it falls, nor shall concrete be placed in any form in such a manner as to leave accumulation of mortar on the form surfaces above the placed concrete. In such cases, some means such as the use of hoppers and, if necessary, vertical ducts of canvas, rubber, or metal shall be used for placing concrete in the forms in a manner that it may reach the place of final deposit without separation. In no case shall the free fall of concrete exceed 4 feet below the ends of ducts, chutes, or buggies. Concrete shall be uniformly distributed during the process of depositing and in no case after depositing shall any portion be displaced in the forms more than 6 feet in horizontal direction. Concrete in forms shall be deposited in uniform horizontal layers not deeper than 2 feet; and care shall be taken to avoid inclined layers or inclined construction joints except where such are required for sloping members. Each layer shall be placed while the previous layer is still soft. The rate of placing concrete in forms shall not exceed 5 feet of vertical rise per hour.

E. Casting New Concrete Against Old: An approved epoxy adhesive bonding agent shall be applied to the old surfaces according to the manufacturer's written recommendations. This provision shall not apply to joints where waterstop is installed, see Section 03290, "Joints in Concrete".

F. Conveyor Belts and Chutes: All ends of chutes, hopper gates, and all other points of concrete discharge throughout the CONTRACTOR'S conveying, hoisting and placing system shall be so designed and arranged that concrete passing from them will not fall separated into whatever receptacle immediately receives it. Conveyor belts, if used, shall be of a type acceptable to the ENGINEER. Chutes longer than 50 feet will not be permitted. Minimum slopes of chutes shall be such that concrete of the specified consistency will readily flow in them. If a conveyor belt is used, it shall be wiped clean by a device operated in such a manner that none of the mortar adhering to the belt will be wasted. All conveyor belts and chutes shall be covered. Sufficient illumination shall be provided in the interior of all forms so that the concrete at the places of deposit is visible from the deck or runway.

G. Placement in Slabs: Concrete placed in sloping slabs shall proceed uniformly from the bottom of the slab to the top, for the full width of the pour. As the work progresses, the concrete shall be vibrated and carefully worked around the slab reinforcement, and the surface of the slab shall be screeded in an up-slope direction.

H. Temperature of Concrete: The temperature of concrete when it is being placed shall be not more than 90 degrees F nor less than 40 degrees F in moderate weather, and not less than 50 degrees F in weather during which the mean daily temperature drops below 40 degrees F. Concrete ingredients shall not be heated to a temperature higher than that necessary to keep the temperature of the mixed concrete, as placed, from falling below the specified minimum temperature. If concrete is placed when the weather is such that the temperature of the concrete would exceed 90 degrees F, the CONTRACTOR shall employ effective means, such as precooling of aggregates and mixing water using ice or placing at night, as necessary to maintain the temperature of the concrete, as it is placed, below 90 degrees F. The CONTRACTOR shall be entitled to no additional compensation on account of the foregoing requirements.

I. Cold Weather Placement:

1. Earth foundations shall be free from frost or ice when concrete is placed upon or against them. Fly ash concrete shall not be placed when the air temperature falls below 50 degrees F.

2. Normal Concrete: When the temperature is below 40 degrees F, the temperature of the concrete placed in the forms shall be at least 60 degrees F. When the temperature is below 30 degrees F, the temperature of the concrete as mixed shall be 65°F. In all cases, when the daily average temperature is below 40 degrees F, the concrete shall be kept at 55 degrees F for the 72 hours, and then allowed to drop uniformly to the air temperature over the next 24 hours. Concrete temperature shall be measured by placing a thermometer 2" below the top of the concrete being placed.

3. Air-entrained concrete shall be kept at the above temperature for 27 hours and above freezing for an additional 72 hours.

4. No calcium chloride shall be used to accelerate hardening of concrete. CONTRACTOR to certify that any additive used does not contain calcium chloride.

5. If low temperature accelerating admixture is proposed, adjust concrete mix as required and obtain approval of the ENGINEER.

6. All concrete materials, reinforcement, forming materials and ground with which concrete is to come in contact shall be free of frost.

7. The covering or other protection used in connection with the curing shall remain in place and intact for at least 24 hours.

8. The work shall be protected from the elements, flowing water, and defacements of any nature during the construction operations.

9. Conform to the provisions of ACI 306.1, except as modified herein.

J. Hot Weather Placement:

K. Conform to ACI 305.1 and the following requirements:

1. Take extra care to reduce the temperature of the concrete being placed, and to prevent rapid drying of newly placed concrete. When the outdoor ambient temperature is more than 90 degrees F, shade the fresh concrete as soon as possible after placing, use an evaporation reducer or fogging to minimize rapid drying. and start curing as soon as the surface of the fresh concrete is sufficiently hard to permit it without damage.

2. Concrete placement temperatures shall be controlled by the CONTRACTOR and shall not be limited to:

   a. Shading and cooling the aggregate;

   b. Avoiding use of hot cement;

   c. Cooling mixing water by additions of ice;

   d. Insulating water supply lines and tanks; and

   e. Insulating mixer drums or cooling them with sprays or wet burlap.

L. Cast-in-place concrete shall be homogeneous throughout the structural element. The methods used to place shall prevent segregation. Placement of concrete for bridge structures shall conform to Section 51-1 of the CSS.

3.4 PUMPING OF CONCRETE

A. General: If the pumped concrete does not produce satisfactory end results, the CONTRACTOR shall discontinue the pumping operation and proceed with the placing of concrete using conventional methods.

B. Pumping Equipment: The pumping equipment must have 2 cylinders and be designed to operate with one cylinder only in case the other one is not functioning. In lieu of this requirement, the CONTRACTOR may have a standby pump on the site during pumping.

C. The minimum diameter of the hose (conduits) shall be 4-inches.

D. Pumping equipment and hoses (conduits) that are not functioning properly, shall be replaced.

E. Aluminum conduits for conveying the concrete will not be permitted.

F. Gradation of coarse aggregates shall conform to ASTM C 33 and shall be as close to the middle range as possible.

G. Gradation of fine aggregate shall conform to ASTM C 33, with 15 to 30 percent passing the number 50 screen and 5 to 10 percent passing the number 100 screen. The fineness modulus of sand used shall not be over 3.00.

H. Field Control: Concrete samples for slump per ASTM C 143 and test cylinders per ASTM C 31 and C 39.

3.5 ORDER OF PLACING CONCRETE

A. The order of placing concrete in all parts of the work shall be acceptable to the ENGINEER. In order to minimize the effects of shrinkage, the concrete shall be placed in units as bounded by construction joints shown. The placing of units shall be done by placing alternate units in a manner such that each unit placed shall have cured at least 7 days before the contiguous unit or units are placed.

B. The surface of the concrete shall be level whenever a run of concrete is stopped. To insure a level, straight joint on the exposed surface of walls, a wood strip at least 3/4-inch thick shall be tacked to the forms on these surfaces. The concrete shall be carried about 1/2-inch above the underside of the strip. About one hour after the concrete is placed, the strip shall be removed and any irregularities in the edge formed by the strip shall be leveled with a trowel and all laitance shall be removed.

3.6 TAMPING AND VIBRATING

A. As concrete is placed in the forms or in excavations, it shall be thoroughly settled and compacted, throughout the entire depth of the layer which is being consolidated, into a dense, homogeneous mass, filling all corners and angles, thoroughly embedding the reinforcement, eliminating rock pockets, and bringing only a slight excess of water to the exposed surface of concrete during placement. Vibrators shall be high speed power vibrators (8,000 to 10,000 rpm) of an immersion type in sufficient number and with (at least one) standby units as required.

B. Operation of Vibrators: Do not horizontally transport concrete in forms with vibrators nor allow vibrators to contact forms or reinforcing. Push vibrators vertically into the preceding layers that are still plastic and slowly withdraw, producing maximum obtainable density in concrete without creating voids or segregation. In no case disturb concrete that has partially set. Vibrate at intervals not exceeding two-thirds the effective visible vibration diameter of the submerged vibrator. Avoid excessive vibration that causes segregation. Use and type of vibrators shall conform to ACI 309 "Recommended Practice for Consolidation of Concrete".

C. Correction of Segregation: Before placing next layer of concrete, and at the top of last placement for vertical elements, remove concrete containing excess water or fine aggregate or showing deficiency of coarse aggregate and fill the space with compacted concrete of correct proportions.

D. Care shall be used in placing concrete around waterstops. The concrete shall be carefully worked by rodding and vibrating to make sure that all air and rock pockets have been eliminated. Where flat-strip type waterstops are placed horizontally, the concrete shall be worked under the waterstops by hand, making sure that all air and rock pockets have been eliminated. Concrete surrounding the waterstops shall be given additional vibration, over and above that used for adjacent concrete placement to assure complete embedment of the waterstops in the concrete.

E. Concrete in walls shall be internally vibrated and at the same time rammed, stirred, or worked with suitable appliances, tamping bars, shovels, or forked tools until it completely fills the forms or excavations and closes snugly against all surfaces. Subsequent layers of concrete shall not be placed until the layers previously placed have been worked thoroughly as specified. Vibrators shall be provided in sufficient numbers, with standby units as required, to accomplish the results herein specified within 15 minutes after concrete of the prescribed consistency is placed in the forms. The vibrating head shall be kept from contact with the surfaces of the forms. Care shall be taken not to vibrate concrete excessively or to work it in any manner that causes segregation of its constituents.

3.7 FINISHING CONCRETE SURFACES

A. General: Surfaces shall be free from fins, bulges, ridges, offsets, honeycombing, or roughness of any kind, and shall present a finished, smooth, continuous hard surface. Allowable deviations from plumb or level and from the alignment, profiles, and dimensions shown are defined as tolerances and are specified in Part 1, herein. These tolerances are to be distinguished from irregularities in finish as described herein. Aluminum finishing tools shall not be used.

B. Formed Surfaces: Formed surfaces for all structures other than building structures and bridge decks, shall be finished per Section 303-1.9 of Standard Specifications. Concrete for bridge decks shall be finished per CSS Section 51-1.17. Concrete for building and retaining wall structures shall be finished per architectural finish as specified hereon, or as shown on Drawings.

C. Unformed Surfaces: After proper and adequate vibration and tamping, all unformed top surfaces of slabs, floors, walls, and curbs shall be brought to a uniform surface with suitable tools. The classes of finish specified for unformed concrete surfaces are designated and defined as follows:

1. Finish U1 - Sufficient leveling and screeding to produce an even, uniform surface with surface irregularities not to exceed 3/8-inch. No further special finish is required.

2. Finish U2 - After sufficient stiffening of the screeded concrete, surfaces shall be float finished with wood or metal floats or with a finishing machine using float blades. Excessive floating of surfaces while the concrete is plastic and dusting of dry cement and sand on the concrete surface to absorb excess moisture will not be permitted. Floating shall be the minimum necessary to produce a surface that is free from screed marks and is uniform in texture. Surface irregularities shall not exceed 1/4-inch. Joints and edges shall be tooled where shown or as determined by the ENGINEER.

3. Finish U3 - After the floated surface (as specified for Finish U2) has hardened sufficiently to prevent excess of fine material from being drawn to the surface, steel troweling shall be performed with firm pressure such as will flatten the sandy texture of the floated surface and produce a dense, uniform surface free from blemishes, ripples, and trowel marks. The finish shall be smooth and free of all irregularities.

4. Finish U4 - Steel trowel finish (as specified for Finish U3) without local depressions or high points. In addition, the surface shall be given a light hairbroom finish with brooming perpendicular to drainage unless otherwise shown. The resulting surface shall be rough enough to provide a nonskid finish.

D. Unformed surfaces shall be finished according to the following schedule:

UNFORMED SURFACE	Finish
Grade slabs and foundations to be covered with concrete or fill material	U1
Floors to be covered with grouted tile or topping grout	U2
Slabs which are water bearing with slopes 10 percent and less	U3
Sloping slabs which are water bearing with slopes greater than 10 percent	U4
Slabs not water bearing	U4
Slabs to be covered with built-up roofing	U2
Interior slabs and floors to receive architectural finish	U2

E. Floor Sealer Hardener (Surface Applied):

1. Floors to receive hardener shall be cured, cleaned, and dry with all work above them completed. Apply zinc and/or magnesium fluorosilicate evenly, using 3 coats, allowing 24 hours between coats.

2. The first coat shall be 1/3 strength, second coat 1/2 strength, and third coat 2/3 strength. Each coat shall be applied so as to remain wet on the concrete surface for 15 minutes. If sodium silicate is used, it shall be applied evenly, using 3 coats, allowing 24 hours between coats, and the material shall be applied full strength at the rate of one gallon per 300 square feet. Approved proprietary hardeners shall be applied in conformance with the manufacturer's instruction. After the final coat is completed and dry, surplus hardener shall be removed from the surface by scrubbing and mopping with water.

3. Floor hardener shall be applied where shown.

F. (Blank)

G. Finishing of Formed Surfaces (As Applicable):

1. General: After removal of forms, give the concrete surfaces one or more of the finishes specified below where so indicated on the Contract Drawings. Revise the finishes as needed to secure the approval of the ENGINEER.

2. As-Cast Finish:

a. Rough Form Finish:

1.) Leave surfaces with the texture imparted by forms, except patch tie holes and defects.
2.) Remove fins exceeding 3-inch in height.

b. Smooth Form Finish:

1.) Coordinate as necessary to secure form construction using smooth, hard, uniform surfaces, with number of seams kept to a practical minimum and in a uniform and orderly pattern.
2.) Patch tie holes and defects.
3.) Remove fins completely.

3. Rubbed Finishes:

a. Provide these finishes only where specifically called for, and then only on a "Smooth Form Finish" base as described above.
b. Smooth Rubbed Finish:

1.) Produce on newly hardened concrete no later than the day following form removal.
2.) Wet the surfaces, and rub with carborundum brick or other abrasive until uniform color and texture are produced.
3.) Do not use a cement grout other than the cement paste drawn from the concrete itself by the rubbing process.

c. Smooth Steel-Trowel Finish: To be applied to all interior floor slabs that will receive resilient floor covering or carpeting. To produce a smooth surface free from defects and blemishes, employ at least two separate troweling operations in which long-handle Fresno Trowels will not be permitted; use of mechanical trowels of approved type permissible only in first troweling; hand-troweling required after initial operation; no dry cement or cement-sand mixtures to be sprinkled on surfaces to absorb moisture or stiffen the concrete; no water to be used in troweling operations.
d. Grout Cleaned Finish:

1.) Do not start cleaning operations until all contiguous surfaces to be cleaned are completed and accessible.
2.) Do not permit cleaning as the work progresses.
3.) Mix one (1) part Portland cement and one-half (1/2) part fine sand with sufficient water to produce a grout having the consistency of thick paint.
4.) Substitute white Portland cement for part of the gray portland cement as required to produce a color matching the color of surrounding concrete, as determined by a trial patch.
5.) Wet the surface of the concrete sufficiently to prevent absorption of water from the grout, and apply the grout uniformly with brushes or spray gun.

6.) Immediately after applying the grout, scrub the surface vigorously with a cork float or stone to coat the surface and fill all air bubbles and holes.
7.) While the grout is still plastic, remove all excess grout by working the surface with a rubber float, sack, or other means.
8.) After the surface whites from drying (about 30 minutes at normal temperatures), rub vigorously with clean burlap.
9.) Keep the surface damp for at least 36 hours after final rubbing.

e. Cork Floated Finish:

1.) Remove forms at an early stage, and no later than three days after placement of concrete.
2.) Remove ties.
3.) Remove burrs and fins.
4.) Mix one (1) part Portland cement and one (1) part fine sand with sufficient water to produce a stiff mortar.
5.) Dampen the wall surface.
6.) Apply mortar with a firm rubber float or with a trowel, filling all surface voids.
7.) Compress mortar into voids using a slow-speed grinder or stone.
8.) If the mortar surface dries too rapidly to permit proper compacting and finishing, apply a small amount of water with a fog sprayer.
9.) Produce the final texture with a cork float using a swirling motion.

4. Unspecified Finish: If the finish or formed surfaces is not specifically called out elsewhere in the Contract Documents, provide the following finishes as applicable.

a. Rough Form Finish: For all concrete surfaces not exposed to public view.
b. Smooth Form Finish: For all concrete surfaces exposed to public view.

H. Finishing unformed top surfaces of slabs, floors, walls, and curbs (As Applicable):

1. Definition of Finishing Tolerances:

a. "Class A": True plane within 1/8" in ten feet as determined by a ten-foot straightedge placed anywhere on the slab in any direction.
b. "Class B": True plane within 3" in ten feet as determined by a ten-foot straightedge placed any where on the slab in any direction.
c. "Class C": True plane within 3" in two feet as determined by a two-foot straightedge placed anywhere on the slab in any direction.

2. Scratched Finish: After the concrete has been placed, consolidated, struck off, and leveled to a "Class C" tolerance, roughen the surface with stiff brushes or rakes before the final set.

3. Floated Finish:

a. After the concrete has been placed, consolidated, struck off, and leveled, do not work the concrete further until ready for floating.
b. Begin floating when the water sheen has disappeared and when the surface has stiffened sufficiently to permit the floating operation.
c. During or after the first floating operation, check the planeness of the surface with a ten-foot straightedge applied at not less than two different angles.
d. Cut down high spots and fill low spots, and produce a surface with a Class B tolerance throughout.
e. Refloat the slab immediately to produce a uniform sandy texture.

4. Troweled Finish:

    a. Provide a floated finish as described above, followed by a power troweling and then a hand troweling.

        1.) Produce initial surface relatively free from defects, but which still may show some trowel marks.
        2.) Provide hand troweling when a ringing sound is produced as the trowel is moved over the surface.
        3.) Thoroughly consolidate surface by hand troweling.

    b. Provide a finished surface essentially free from trowel marks, uniform in texture and appearance, and in a plane of Class A tolerance.

        1.) For concrete on metal deck, "Class B" true plane tolerance is acceptable.
        2.) On surfaces intended to support floor coverings, use grinding or other means as necessary to remove all defects of such magnitude as would show through the floor covering.

5. Broom Finish:

    a. Provide a floated finish as described above.
    b. While the surface is still plastic, provide a textured finish by drawing a fiber bristle broom uniformly over the surface.
    c. Unless otherwise directed by the ENGINEER, provide the texturing in one direction only.
    d. Provide "light", "medium", or "coarse" texturing as directed by the ENGINEER or otherwise called for on the Contract Drawings.

6. Exposed Aggregate Finish:

    a. Provide a floated finish as described above.
    b. While the surface is still plastic, embed an approved aggregate uniformly into the surface by light tamping.
    c. Provide complete coverage to the depth of a single stone.
    d. Float the surface until the embedded stone is fully coated with mortar and the surface has been brought to a true plane with "Class B" tolerance.
    e. After the matrix has hardened sufficiently to prevent dislodgement of aggregate, begin exposure.

        1.) Allow copious quantities of water, without force, to flow over the surface of the concrete while the matrix encasing the aggregate is removed by brushing with a fine bristle brush.
        2.) Continue this operation until the aggregate is uniformly exposed, but not dislodged.

    f. An approved chemical retarder may be used and sprayed onto the freshly floated surface to extend the working time for exposure of aggregate.

7. Unspecified Finish: If the finish of slab surfaces is not specifically called for elsewhere in the Contract Documents, provide the following finishes as applicable:

   a. Scratched Finish: For surfaces scheduled to receive bond-applied cementitious applications.
   b. Floated Finish: For surfaces intended to receive roofing.
   c. Troweled Finish:

      1.) For floors intended as walking surfaces.
      2.) Floors scheduled to receive floor coverings or waterproof membrane.
      3.) Parking areas.

   d. Broom Finish: Garage Ramps.
   e. Non-Slip Finish:

      1.) Exterior platforms, steps and landings and slabs over underground fuel storage tanks.
      2.) Interior and exterior pedestrian ramps.

   f. Light Sand Blast Finish: For exterior walking surfaces.

I. Slab Surfaces-Testing: Test with a 10-foot straight-edge to detect high and low spots; maximum 3-inch in 10-feet permitted; deviations to be eliminated, surfaces to be approved by the ENGINEER; make any necessary corrections as directed by the ENGINEER.

J. Soda and Acid Wash:

1. Concrete surfaces to receive plaster, paint or other finish and which have been formed by oil-coated forms, scrub with a solution of one and one-half (1-1/2) lbs. caustic soda to one gallon of water.

2. On surfaces where smooth wood or waste molds have been used, scrub with a solution of 20% muriatic acid or hydrochloric acid.

3. After the surfaces have been scrubbed, wash with clean water as soon as possible.

K. Surface finish for bridge structures, other than bridge decks, shall comply with Section 51-1.18 of CSS.

3.8 CURING AND DAMPPROOFING

A. Curing and Dampproofing shall conform to Section 03370 "Curing Concrete", Part 3.

3.9 PROTECTION

A. The CONTRACTOR shall protect all concrete against injury until final acceptance by the CITY. Fresh concrete shall be protected from damage due to rain, hail, sleet, or snow. The CONTRACTOR shall provide such protection while the concrete is still plastic and whenever such precipitation is imminent or occurring. Immediately following the first frost in the fall, the CONTRACTOR shall be prepared to protect all concrete against freezing. After the first frost, and until the mean daily temperature in the vicinity of the worksite falls below 40 degrees F for more than one day, the concrete shall be maintained at a temperature not lower than 50 degrees F for at least 72 hours after it is placed.

B. The CONTRACTOR shall protect all concrete against injury or damage from excessive heat, lack of moisture, overstress, or any other cause until final acceptance by the CITY. Particular care shall be taken to prevent the drying of concrete and to avoid roughening or otherwise damaging the surface. Any concrete found to be damaged, or which may have been originally defective, or which becomes defective at any time prior to the final acceptance of the completed work, or which departs from the established line or grade, or which, for any other reason, does not conform to the requirements of the Contract Documents, shall be satisfactorily repaired or removed and replaced with acceptable concrete at the CONTRACTOR'S expense.

3.10 TREATMENT OF SURFACE DEFECTS

A. As soon as forms are removed, all exposed surfaces shall be carefully examined and any irregularities shall be immediately rubbed or ground in a satisfactory manner in order to secure a smooth, uniform, and continuous surface. Plastering or coating of surfaces to be smoothed will not be permitted. No repairs shall be made until after inspection by the ENGINEER. In no case will extensive patching of honeycombed concrete be permitted. Concrete containing minor voids, holes, honeycombing, or similar depression defects shall be repaired as specified herein. Concrete containing extensive voids, holes, honeycombing, or similar depression defects, shall be completely removed and replaced. All repairs and replacements herein specified shall be promptly executed by the CONTRACTOR at its own expense.

B. Defective surfaces to be repaired shall be cut back from true line a minimum depth of 1/2-inch over the entire area. Feathered edges will not be permitted. Where chipping or cutting tools are not required in order to deepen the area properly, the surface shall be prepared for bonding by the removal of all laitance or soft material, and not less than 1/32-inch depth of the surface film from all hard portions, by means of an efficient sandblast. After cutting and sandblasting, the surface shall be wetted sufficiently in advance of shooting with shotcrete or with cement mortar so that while the repair material is being applied, the surfaces under repair will remain moist, but not so wet as to overcome the suction upon which a good bond depends. The material used for repair purposes shall consist of a mixture of one sack of cement to 3 cubic feet of sand. For exposed walls, the cement shall contain such a proportion of Atlas white Portland cement as is required to make the color of the patch match the color of the surrounding concrete.

C. Holes left by tie-rod cones shall be reamed so as to leave the surfaces of the holes clean and rough. These holes then shall be repaired in an approved manner with non-shrink grout. Holes left by form-tying devices having a rectangular cross-section, and other imperfections having a depth greater than their least surface dimension, shall not be reamed but shall be repaired in an approved manner with non-shrink grout.

D. All repairs shall be built up and shaped in such a manner that the completed work will conform to the requirements of this Section, as applicable, using approved methods which will not disturb the bond, cause sagging, or cause horizontal fractures. Surfaces of said repairs shall receive the same kind and amount of curing treatment as required for the concrete in the repaired section.

E. Prior to filling any structure with water, all cracks that may have developed shall be repaired to the satisfaction of the ENGINEER. This repair method shall be done on the water bearing face of members. Prior to backfilling, faces of members in contact with fill, which are not covered with a waterproofing membrane, shall also have cracks repaired as specified herein.

END OF SECTION

THIS PAGE INTENTIONALLY LEFT BLANK

SECTION 03315
GROUT

PART 1 - GENERAL

1.1 THE REQUIREMENT

A. The CONTRACTOR shall furnish all materials for grout in accordance with the provisions of this Section and shall form, mix, place, cure, repair, finish, and do all other work as required to produce finished grout, in accordance with the requirements of the Contract Documents.

B. All grouts shall be City of Los Angeles approved product. The CONTRACTOR shall submit a copy of the Los Angeles Research Report with submittals.

C. The following types of grout shall be covered in this Section:

1. Non-Shrink Grout: This type of grout is to be used wherever grout is shown in the Contract Documents, unless another type is specifically referenced.

2. Cement Grout.

3. Epoxy Grout.

1.2 RELATED WORK SPECIFIED ELSEWHERE

A. Section 03250 Concrete Accessories.

B. Section 03300 Cast-in-Place Concrete.

C. Section 03400 Precast Concrete.

1.3 REFERENCE SPECIFICATIONS, CODES, AND STANDARDS

A. Comply with the reference standards of the GENERAL REQUIREMENTS.

B. Comply with the current provisions of the following Codes and Standards, as applicable.

1. Commercial Standards:

CRD-C 621	Corps of Engineers Specification for Non-shrink Grout.
ASTM C 109	Test Method for Compressive Strength of Hydraulic Cement Mortars (Using 2-in or 50-mm Cube Specimens).
ASTM C 531	Test Method for Linear Shrinkage and Coefficient of Thermal Expansion of Chemical- Resistant Mortars, Grouts, and Monolithic Surfacings.
ASTM C 579	Test Methods for Compressive Strength of Chemical-Resistant Mortars and Monolithic Surfacings.
ASTM C 827	Test Method for Early Volume Change of Cementitious Mixtures.

ASTM C 1107	Standard Specification for Packaged dry hydraulic cement grout (non-shrink).
ASTM D 696	Test Method for Coefficient of Linear Thermal Expansion of Plastics.

2. Other Government Standards:

CSS	Caltrans Standard Specifications.

1.4 CONTRACTOR SUBMITTALS

A. Submittals shall be made in accordance with GENERAL REQUIREMENTS.

B. The following submittals and specific information shall be provided.

1. The CONTRACTOR shall submit certified test results verifying the compressive strength, shrinkage, and expansion requirements specified herein; and manufacturer's literature containing instructions and recommendations on the mixing, handling, placement and appropriate uses for each type of non-shrink and epoxy grout used in the work.

1.5 QUALITY ASSURANCE

A. Field Tests:

1. Compression test specimens will be taken during construction from the first placement of each type of grout, and at intervals thereafter as selected by the ENGINEER to insure continued compliance with these specifications. The specimens will be made by the INSPECTOR.

2. Compression tests and fabrication of specimens for cement grout and non-shrink grout will be performed as specified in ASTM C 109 at intervals during construction as selected by the ENGINEER. A set of three specimens will be made for testing at 7 days, 28 days, and each additional time period as appropriate.

3. Compression tests and fabrication of specimens for epoxy grout will be performed as specified in ASTM C 579, Method B, at intervals during construction as selected by the ENGINEER. A set of three specimens will be made for testing at 7 days, and each earlier time period as appropriate.

4. All grout, already placed, which fails to meet the requirements of these specifications, is subject to removal and replacement at the cost of the CONTRACTOR.

5. The cost of all laboratory tests on grout will be borne by the CITY, but the CONTRACTOR shall assist the INSPECTOR in obtaining specimens for testing. However, the CONTRACTOR shall be charged for the cost of any additional tests and investigation on work performed which does not meet the specifications. The CONTRACTOR shall supply all materials necessary for fabricating and containing the test specimens.

B. Construction Tolerances: Construction tolerances shall be as specified in the Section 03300, "Cast-in-Place Concrete," except as modified herein and elsewhere in the Contract Documents.

PART 2 - PRODUCTS

2.1 CEMENT GROUT

A. Cement Grout: Cement grout shall be composed of one part cement, three parts sand, and the minimum amount of water necessary for the mixture to flow under its own weight. Where needed to match the color of adjacent concrete, white Portland cement shall be blended with regular cement as needed. In addition, where needed, an approved admixture may be added to increase workability at a low water/cement ratio. The minimum compressive strength at 28 days shall be 4000 psi.

B. Cement grout materials shall be as specified in Section 03300, "Cast-in-Place Concrete".

2.2 PREPACKAGED GROUTS

A. Non-Shrink Grout:

1. Non-shrink grout shall be a prepackaged, inorganic, non-gas-liberating when tested in accordance with C1107, non-metallic, cement-based grout requiring only the addition of water. Manufacturer's instructions shall be printed on each bag or other container in which the materials are packaged. The specific formulation for each class of non-shrink grout specified herein shall be that recommended by the manufacturer for the particular application.

2. Class A non-shrink grouts shall have a minimum 28 day compressive strength of 5,000 psi; shall have no shrinkage (0.0 percent) and a maximum 4.0 percent expansion in the plastic state when tested in accordance with ASTM C 827; and shall have no shrinkage (0.0 percent) and a maximum of 0.2 percent expansion in the hardened state when tested in accordance with CRD C 621.

3. Class B non-shrink grouts shall have a minimum 28 day compressive strength of 5,000 psi and shall meet the requirements of CRD C 621.

4. Application:

a. Class A non-shrink grout shall be used for the repair of all holes and defects in concrete members which are water bearing or in contact with soil or other fill material, grouting under all equipment base plates, and at all locations where grout is specified in the contract documents; except, for those applications for Class B non-shrink grout and epoxy grout specified herein. Class A non-shrink grout may be used in place of Class B non-shrink grout for all applications.

b. Class B non-shrink grout shall be used for the repair of all holes and defects in concrete members which are not water-bearing and not in contact with soil or other fill material, grouting under all base plates for structural steel members, and grouting railing posts in place.

B. Epoxy Grout:

1. Epoxy grout shall be a pourable, non-shrink, 100 percent solids system. The epoxy grout system shall have three components: resin, hardener, and specially blended aggregate, all premeasured and prepackaged. The resin component shall not contain any non-reactive diluents. Resins containing butyl glycidyl ether (BGE) or other highly volatile and hazardous reactive diluents are not acceptable. Variation of component ratios is not permitted unless specifically recommended by the manufacturer. Manufacturer's instructions shall be printed on each container in which the materials are packaged.

2. The chemical formulation of the epoxy grout shall be that recommended by the manufacturer for the particular application.

3. The mixed epoxy grout system shall have a minimum working life of 45 minutes at 75 degrees F.

4. The epoxy grout shall develop a compressive strength of 5,000 psi in 24 hours and 10,000 psi in seven days when tested in accordance with ASTM C 579, Method B. There shall be no shrinkage (0.0 percent) and a maximum 4.0 percent expansion when tested in accordance with ASTM C 827.

5. The epoxy grout shall exhibit a minimum effective bearing area of 95 percent. This shall be determined by a test consisting of filling a 2-inch diameter by 4-inch high metal cylinder mold covered with a glass plate coated with a release agent. A weight shall be placed on the glass plate. At 24 hours after casting, the weight and plate shall be removed and the area in plan of all voids measured. The surface of the grout shall be probed with a sharp instrument to locate all voids.

6. The peak exotherm of a 2-inch diameter by 4-inch high cylinder shall not exceed 95 degrees F when tested with 75 degree F material at laboratory temperature. The epoxy grout shall exhibit a maximum thermal coefficient of 30 x 10^{-6} inches/inch/degree F when tested according to ASTM C 531 or ASTM D 696.

7. The CONTRACTOR shall demonstrate the ability of the epoxy grout system to completely fill the size and depth of the intended hole, blockout, or area before the system is submitted for consideration by the ENGINEER.

8. Application: Epoxy grout shall be used to embed all anchor bolts and reinforcing steel required to be set in grout, and for all other applications required in the Contract Documents.

2.3 CURING MATERIALS

A. Curing materials shall be as specified in Section 03300, "Cast-in-Place Concrete" for cement grout and as recommended by the manufacturer of prepackaged grouts.

2.4 CONSISTENCY

A. The consistency of grouts shall be that necessary to completely fill the space to be grouted for the particular application. Dry pack consistency is such that the grout is plastic and moldable but will not flow. Where "dry pack" is called for in the Contract Documents, it shall mean a grout of that consistency; the type of grout to be used shall be as specified herein for the particular application.

2.5 MEASUREMENT OF INGREDIENTS

A. Measurements for cement grout shall be made accurately by volume using containers. Shovel measurement shall not be allowed.

B. Prepackaged grouts shall have ingredients measured by means recommended by the manufacturer.

PART 3 - EXECUTION

3.1 GENERAL

A. All surface preparation, curing, and protection of cement grout shall be as specified in Section 03300 - Cast-in-Place Concrete. The finish of the grout surface shall match that of the adjacent concrete.

B. The manufacturer of Class A non-shrink grout and epoxy grout shall provide on-site technical assistance upon request. All costs related to this requirement shall be borne by the CONTRACTOR.

C. All mixing, surface preparation, handling, placing, consolidation, and other means of execution for prepackaged grouts shall be done according to the instructions and recommendations of the manufacturer.

3.2 CONSOLIDATION

Grout shall be placed in such a manner, for the consistency necessary for each application, so as to assure that the space to be grouted is completely filled.

END OF SECTION

THIS PAGE INTENTIONALLY LEFT BLANK

SECTION 03370
CONCRETE CURING

PART 1 - GENERAL

1.1 THE REQUIREMENT

A. The Contractor shall furnish all tools, equipment, materials, and supplies and shall perform all labor required to complete the work as indicated on the Drawings and specified herein.

B. This section covers the work necessary for the concrete curing requirements.

1.2 RELATED WORK SPECIFIED ELSEWHERE

A. Section 03100 - Concrete Formwork.

B. Section 03300 - Cast-In-Place Concrete.

C. Section 03400 - Precast Concrete.

1.3 REFERENCE SPECIFICATIONS, CODES AND STANDARDS

A. Comply with the reference standards and Standard Specifications of the GENERAL REQUIREMENTS.

B. Comply with the current provisions of the following Codes and Standards, as applicable.

1. Federal Specifications:

UU-B-790A (Int. Amd. 1)	Building Paper, Vegetable Fiber (Kraft, Waterproofed, Waterproofed, water Repellant and Fire Resistant).

2. Commercial Standards:

ACI 308	Standard Practice for Curing Concrete.
ASTM C 156	Test Method for Water Retention by Concrete Curing Materials.
ASTM C 171	Specifications for Sheet Materials for Concrete Curing.
ASTM C 309	Specifications for Liquid Membrane-Forming Compounds for Curing Concrete.

3. Government Standards:

CSS	Caltrans Standard Specifications.

1.4 CONTRACTOR SUBMITTALS

A. Submittals shall be made in accordance with the GENERAL REQUIREMENTS.

1.5 QUALITY ASSURANCE

A. Quality Control Data:

1. Curing Compound: Manufacturer's Certification of Compliance, to include statement that product meets ASTM C 309**,** additional permeability requirement, and coverage.

2. Retardant For Exposed Aggregate Finish on Formed Surface: Manufacturer's Certification of Compliance including statement that product is suitable for and will meet job requirements.

3. Curing method, procedures and method of application to be used shall be in compliance with the requirements as specified herein.

PART 2 - PRODUCTS

2.1 CURING MATERIALS

A. Materials for curing concrete as specified herein shall conform to the Standard Specifications and the following requirements:

1. Polyethylene sheet for use as concrete curing blanket shall be white and conform to ASTM C 171. The loss of moisture when determined in accordance with the requirements of ASTM C 156 shall not exceed 0.055 grams per square centimeter of surface.

2. Polyethylene-coated waterproof paper sheeting for use as concrete curing blanket shall consist of white polyethylene sheeting free of visible defects, uniform in appearance, having a nominal thickness of 2 mils and permanently bonded to waterproof paper conforming to the requirements of Federal Specification UU-B-790A (Int. Amd. 1). The loss of moisture, when determined in accordance with the requirements of ASTM C 156, shall not exceed 0.055 gram per square centimeter of surface.

3. Polyethylene-coated burlap for use as concrete curing blanket shall conform to ASTM C 171. The loss of moisture, when determined in accordance with the requirements of ASTM C 156, shall not exceed 0.055 grams per square centimeter of surface.

4. Curing mats for use in Curing Method 6 as specified herein, shall be heavy shag rugs or carpets or cotton mats quilted at 4-inches on center. Curing mats shall weigh a minimum of 12 ounces per square yard when dry.

5. Evaporation retardant shall be a material such as Confilm as manufactured by Masterbuilders, Cleveland, OH; or an approved equal.

B. Curing Compound:

1. Curing compound shall consist of a liquid which, when applied to fresh concrete by means of a spray gun, will form an impervious membrane over the exposed surfaces of the concrete.

2. The membrane may be either asphaltic or paraffin derivatives to which other waterproofing materials may have been added. Concrete curing compounds shall be designated by type as follows:

Type 1 – Clear or translucent without dye.

Type 1-D - Clear or translucent with red fugitive dye.

Type 2 - White pigmented.

Type 3 - Light gray pigmented.

Type 4 - Black pigmented.

3. Provide curing compound meeting requirements of ASTM C 309, with additional requirement that permeability not exceed 0.039 gm/square cm/72 hours, when tested in accordance with ASTM C 156 standards.

4. Provide evaporation retardant where required to prevent rapid evaporation of water from fresh exposed concrete.

5. When pigmented curing compounds are used, at the time of use, the compound shall be thoroughly mixed, with the pigment uniformly dispensed throughout the mixture.

6. Unless otherwise specified, Type 1-D curing compound shall be used, except that Type 2 shall be used for the top surface of bridge decks.

2.2 FLOOR HARDENER (SURFACE-APPLIED)

A. Floor hardener shall be a colorless, aqueous solution of zinc and/or magnesium fluosilicate.

B. Each gallon of fluosilicate solution shall contain minimum of 2 pounds of crystals.

C. All hardeners shall be furnished by the CONTRACTOR and shall be delivered ready mixed in sealed original containers bearing the manufacturer's name and product identification.

PART 3 - EXECUTION

3.1 CURING OF CONCRETE

A. The top surface of highway bridge decks shall be cured by both the curing compound method, and by the water method except that the curing compound shall be either Pigmented Curing Compound-Chlorinated Rubber Base Type (State Specification 8030-71D-04), or Pigmented Curing Compound Chlorinated Rubber Base white or Tinted (State Specification 8030-71D-05), or as directed by the Engineer.

3.2 CURING AND DAMPPROOFING METHODS

A. General: All concrete shall be cured for not less than 10 days after placing, in accordance with the methods specified herein for the different parts of the work, and described in detail in the following paragraphs. Curing concrete for bridge structures shall comply with Section 90-7 of the CSS.

Surface to be Cured or Dampproofed (except bridge structures)	Method
Unstripped forms	1
Wall sections with forms removed	6
Construction joints between footings and walls, and between floor slab and columns	2
Encasement concrete and thrust blocks	3
All concrete surfaces not specifically provided for elsewhere in this Paragraph	4
Floor slabs on grade	5
Roof and slabs not on grade	6
Exterior buried surfaces of roof slabs and basement walls	7
All liquid and water retaining structures	2

Method 1: Wooden forms shall be wetted immediately after concrete has been placed and shall be kept wet with water until removed. If steel forms are used the exposed concrete surfaces shall be kept continuously wet until the forms are removed. If forms are removed within 10 days of placing the concrete, curing shall be continued in accordance with Method 6, herein.

Method 2: The surface shall be covered with burlap mats which shall be kept wet with water for the duration of the curing period, until the concrete in the walls has been placed. No curing compound shall be applied to surfaces cured under Method 2.

Method 3: The surface shall be covered with moist earth not less than 4 hours, nor more than 24 hours, after the concrete is placed. Earthwork operations that may damage the concrete shall not begin until at least 7 days after placement of concrete.

Method 4: The surface shall be sprayed with a liquid curing compound.

1 Curing compound shall be applied in 2 coats according to the manufacturer's printed instructions. The direction of application of the second coat shall be perpendicular to the first. The second coat shall be applied when the first coat is dry to touch, but not to exceed 4 hours. Each coat shall be applied at a rate not more than 200 square feet per gallon and in such a manner as to cover the surface with a uniform film which will seal thoroughly.

2 Where the curing compound method is used, care shall be exercised to avoid damage to the seal during the curing period. The CONTRACTOR shall maintain and monitor the curing compound membrane for a minimum of 10 days. Should the seal be damaged or broken before the expiration of this curing period, the break shall be repaired immediately by the application of additional curing compound over the damaged portion.

3 Wherever curing compound may have been applied by mistake to surfaces against which concrete subsequently is to be placed and to which it is to adhere, said compound shall be entirely removed by wet sandblasting just prior to the placing of new concrete.

4 Application of the curing compound to the concrete shall commence as soon as the finished surface of the concrete reaches a uniformly damp appearance with no free water on the surface. Curing compound shall also be applied no later than 2 hours after removal of forms from contact with formed surfaces or after the placement of concrete on the subgrade. At any point, the application rate shall be within 50 square feet per gallon of the nominal rate and the average application rate shall be within 25 square feet per gallon of the nominal rate specified when tested in accordance with California Test 535.

5 Repairs required to be made to formed surfaces shall be made within the said 2-hour period; provided, however, that any such repairs which cannot be made within the said 2-hour period shall be delayed until after the curing compound has been applied. When repairs are to be made to an area on which curing compound has been applied, the area involved shall first be wet-sandblasted to remove the curing compound, following which repairs shall be made as specified herein.

6 At the time of use, pigmented curing compounds shall be maintained in a thoroughly mixed condition. Containers of curing compound shall remain air-tight when not in use.

7 The CONTRACTOR shall apply curing compound in the presence of the INSPECTOR. Curing compound shall be applied to form a continuous and uniform membrane.

Method 5: Immediately after the concrete has been screeded, it shall be treated with a liquid evaporation retardant. The retardant shall be used again after each work operation as necessary to prevent drying shrinkage cracks.

1. Immediately after each square foot of the concrete has been finished, it shall be given a coat of curing compound in accordance with Method 4, herein. Not less than one hour nor more than 4 hours after the coat of curing compound has been applied, the surface shall be wetted with water delivered through a fog nozzle, and concrete-curing blankets shall be placed on the slabs. The curing blankets shall be polyethylene sheet, polyethylene-coated waterproof paper sheeting or polyethylene-coated burlap. The blankets shall be laid with the edges butted together and with the joints between strips sealed with 2-inch wide strips of sealing tape or with edges lapped not less than 3-inches and fastened together with a waterproof cement to form a continuous watertight joint.

2. The curing blankets shall be left in place during the 10-day curing period and shall not be removed until after concrete for adjacent work has been placed. Should the curing blankets become torn or otherwise ineffective, the CONTRACTOR shall replace damaged sections. During the first 3 days of the curing period, no traffic of any nature and no depositing, temporary or otherwise, of any materials shall be permitted on the curing blankets. During the remainder of the curing period, foot traffic and temporary depositing of materials that impose light pressure will be permitted only on top of plywood sheets 5/8-inch minimum thickness, laid over the curing blanket. The CONTRACTOR shall add water under the curing blanket as often as necessary to maintain damp concrete surfaces at all times.

Method 6: Concrete slabs shall be treated with an evaporation retardant as specified in Method 5. The concrete shall be kept continuously wet by the application of water for a minimum period of at least 10 consecutive days beginning immediately after the concrete has been placed or forms removed. Heavy curing mats shall be used as a curing medium to retain the moisture during the curing period. The curing medium shall be weighted or otherwise held in place to prevent being dislodged by wind or any other causes. Until the concrete surface is covered with the curing medium the entire surface shall be kept damp by applying water using nozzles that atomize the flow so that the surface is not marred or washed. The curing blankets and concrete shall be kept continuously wet by the use of sprinklers or other means both during and after normal working hours. Immediately after the application of water has terminated at the end of the curing period, the curing medium shall be removed and curing compound immediately applied in accordance with Method 4, herein. The CONTRACTOR shall dispose of excess water from the curing operation to avoid damage to the work.

Method 7:

1. Method 6 shall be used for curing.

2. Immediately after completion of curing the surface shall be sprayed with a dampproofing agent consisting of an asphalt emulsion. Application shall be in 2 coats. The first coat shall be diluted to 1/2 strength by the addition of water and shall be sprayed on so as to provide a maximum coverage rate of 100 square feet per gallon of dilute solution. The second coat shall consist of an application of the specified material, undiluted, and shall be sprayed on so as to provide a maximum coverage rate of 100 square feet per gallon. Dampproofing material shall be as specified herein.

3. As soon as the asphalt emulsion, applied as specified herein, has taken an initial set, the entire area thus coated shall be coated with whitewash. Any formula for mixing the whitewash may be used which produces a uniformly coated white surface and which so remains until placing of the backfill. Should the whitewash fail to remain on the surface until the backfill is placed, the CONTRACTOR shall apply additional whitewash.

3.3 EVAPORATION RETARDANT APPLICATION PROTECTION

A. Spray onto surface of fresh concrete immediately after screeding to react with surface moisture.

B. Reapply after smoothing surface with a bull float to ensure continuous, compacted monomolecular layer until final finishing is completed.

C. After finishing, apply water curing as specified.

3.4 CURING AND PROTECTION IN COLD WEATHER

A. Concrete shall not be placed during cold weather where conditions would require procedures as specified in ACI 306.

B. The Engineer, at his option, may allow cold weather placement of concrete if an extended period of cold weather is anticipated.

C. Water curing of concrete may be reduced to 6 days during periods when the mean daily temperature in the vicinity of the worksite is less than 40 degrees F; provided that, during the prescribed period of water curing, when temperatures are such that concrete surfaces may freeze, water curing shall be temporarily discontinued.

D. Concrete cured by an application of curing compound will require no additional protection from freezing if the protection at 50 degrees F for 72 hours is obtained by means of approved insulation in contact with the forms or concrete surfaces; otherwise, the concrete shall be protected against freezing temperatures for 72 hours immediately following 72 hours protection at 50 degrees F. Concrete cured by water curing shall be protected against freezing temperatures for 3 days immediately following the 72 hours of protection at 50 degrees F.

E. Discontinuance of protection against freezing temperatures shall be such that the drop in temperature of any portion of the concrete will be gradual and will not exceed 40 degrees F in 24 hours. In the spring, when the mean daily temperature rises above 40 degrees F for more than 3 successive days, the specified 72-hour protection at a temperature not lower than 50 degrees F may be discontinued for as long as the mean daily temperature remains above 40 degrees F; provided, that the concrete shall be protected against freezing temperatures for not less than 48 hours after placement.

F. Where artificial heat is employed, special care shall be taken to prevent the concrete from drying. Use of unvented heaters will be permitted only when unformed surfaces of concrete adjacent to the heaters are protected for the first 24 hours from an excessive carbon dioxide atmosphere by application of curing compound; provided, that the use of curing compound for such surfaces is otherwise permitted by these Specifications.

3.5 CLEAR HARDENER APPLICATION (SURFACE APPLIED)

A. Before application, thoroughly cure floors to receive hardener for minimum 28 days, keep clean, unpainted, free from membrane curing compounds, and dry with all work above them completed.

B. Do not use curing compounds where floor hardeners are specified. Use water curing only.

C. Apply hardener evenly, using three coats, allowing 24 hours between coats as follows:

1. First Coat: 1/3 strength, second coat 1/2 strength, and third coat 2/3 strength, mix with water.

2. Apply each coat so as to remain wet on surface for 15 minutes.

3. Apply approved hardeners in accordance with manufacturer's instructions.

4. After final coat is completed and dry, remove surplus hardener from surface by scrubbing and mopping with water.

END OF SECTION

THIS PAGE INTENTIONALLY LEFT BLANK

SECTION 03400
PRECAST CONCRETE

PART 1 - GENERAL

1.1 THE REQUIREMENT

A. The CONTRACTOR shall furnish all tools, equipment, materials, and supplies and shall perform all labor required to complete the precast concrete work in accordance with the Contract Documents.

B. This Section covers the design, fabrication, delivery and installation of all plant precast concrete units, including connections, complete, in place, as shown and specified.

1.2 RELATED WORK SPECIFIED ELSEWHERE

A. Section 03315 - Grout.

B. Section 07900 - Joint Sealants.

1.3 REFERENCE SPECIFICATIONS, CODES AND STANDARDS

A. Comply with reference standards of the GENERAL REQUIREMENTS.

B. Comply with the current provisions of the following Codes and Standards, ~~or~~ as applicable:

1. Commercial Standards:

ACI 301	Specifications for Structural Concrete.
ACI 304	Guide for Measuring, Mixing, Transporting and Placing Concrete.
ACI 311	Guide for Concrete Plant Inspection and Testing of Ready-Mixed Concrete.
ACI 315	Details and Detailing of Concrete Reinforcement.
ACI 318	Building Code Requirements for Reinforced Concrete.
ACI 347	Guide to Formwork for Concrete.
AWS A5.4	Welding Rods and Electrodes.
AWS D1.1	Welding and Cutting.
AWS D1.4	Structural Welding Code - Reinforcing Steel.
ASTM A 184	Specification for Fabricated Deformed Steel Bar Mats for Concrete Reinforcement.
ASTM A 185	Specification for Steel Welded Wire, Fabric, Plain, for Concrete Reinforcement.

ASTM A 193	Specification for Alloy-Steel and Stainless Steel Bolting Materials for High-Temperature Service.
ASTM A 194	Specification for Carbon and Alloy Steel Nuts for Bolts for High-Pressure and High-Temperature Service.
ASTM A 351	Specification for Steel Castings, Austenitic, for High-Temperature Service.
ASTM A 497	Specification for Welded Deformed Steel Wire Fabric for Concrete Reinforcement.
ASTM A 580	Specification for Stainless and Heat-Resisting Steel Wire.
ASTM A 615	Specification for Deformed and Plain Billet-Steel Bars for Concrete Reinforcement.
ASTM A 666	Specification for Austenitic Stainless Steel, Sheet, Strip, Plate, and Flat Bar for Structural Applications.
ASTM A 775	Specifications for Epoxy-Coated Reinforcing Steel Bars.
ASTM C 33	Specification for Concrete Aggregates.
ASTM C 67	Method for Sampling and Testing Brick and Structural Clay Tile.
ASTM C 127	Test Method for Specific Gravity and Absorption of Coarse Aggregate.
ASTM C 128	Test Method for Specific Gravity and Absorption of Fine Aggregate.
ASTM C 150	Specification for Portland Cement.
ASTM C 173	Test Method for Air Content of Freshly Mixed Concrete by the Volumetric Method.
ASTM C 204	Test Method for Fineness of Portland Cement by Air Permeability Apparatus.
ASTM C 231	Test Method for Air Content of Freshly Mixed Concrete by the Pressure Method.
ASTM C 260	Specification for Air-Entraining Admixtures for Concrete.
ASTM C 311	Method for Sampling and Testing Fly Ash or Natural Pozzolans for Use as a Mineral Admixture in Portland Cement Concrete.
ASTM C 494	Test Method for Shear Fatigue of Sandwich Core Materials.
ASTM D 2240	Test Method for Rubber Property -- Durometer Hardness.

AWS B2.1	Specification for Welding Procedure and Performance Qualification.
AWS D1.4	Structural Welding Code - Reinforced Steel.
PCI MNL-116	Manual for Quality Control for Plants and Production of Structural Precast Concrete Products.
PCI MNL-117	Manual for Quality Control for Plants and Production of Architectural Precast Concrete Products.
PCI MNL-121	Manual for Structural Design of Architectural Precast Concrete.

2. Government Standards:

CSS	Caltrans Standard Specifications.

1.4 CONTRACTOR SUBMITTALS

A. Submittals shall be made in accordance with the GENERAL REQUIREMENTS.

B. Shop Drawings:

1. Shop drawings shall provide details in accordance with ACI 315 and ACI 318 including installation details.

2. Shop drawings, including design computations, shall be stamped and signed by a civil or structural engineer registered in the State of California and shall be approved by the ENGINEER.

3. Shop drawings shall indicate precast unit identification marks, location of units in the WORK, elevations, fabrication details, welding details, reinforcement, connections, dimensions, interface with adjacent members, and special handling instructions in sufficient detail to cover manufacture, handling, and erection. Shop drawings shall include erection drawings. Shop drawings shall also include design computations for above mentioned drawings.

4. Shop drawings shall be divided into complete separate submittals for each structure.

a. Shop Drawings: Showing all elevations, dimensions, horizontal and vertical sections, openings, inserts, reinforcing, anchorage devices, pick-up points, details, design computations, and other requirements for each different type of panel to be incorporated into the portion of the project covered by the submittal. Drawings shall be 24 inches x 36 inches maximum.

1.5 QUALITY ASSURANCE

A. General Requirements: Design precast members under direct supervision of a professional structural engineer experienced in design of precast concrete units, registered in the State and conforming to requirements of PCI MNL-121 and to ACI 318.

1. Precast Manufacturer and erectors shall be qualified in accordance with PCI MNL-117 and MNL-116.

2. Welding shall be in accordance with AWS D1.1, AWS D12.1, AWS B2.1, and AWS A5.4.

3. Manufacture, Transportation and Installation: The Manufacturer shall specialize in providing precast products and services normally associated with precast concrete construction with high quality architectural finishes similar to that indicated on drawings, using procedures complying with PCI MNL-116 and MNL-117, and PCI plant certified for at least 5 years.

4. Use adequate number of skilled workers who are thoroughly trained and experienced in the necessary crafts and who are completely familiar with the specified requirements and methods needed for proper performance of the work of this Section.

1.6 DESIGN REQUIREMENTS

A. General: The precast concrete and connection designs shown hereon represent minimum precast construction requirements. The Manufacturer shall verify the connection designs for all handling, erection, and service conditions, and shall provide any additional materials necessary to meet the design conditions.

B. Concrete Mix: The concrete mix shall be designed by the Manufacturer, with certification stamp and signature by a Civil or Structural Engineer registered in the State of California, and approved by the ENGINEER, using the materials and quantities specified to meet all of the requirements of this specification.

1. Proportioning of Concrete Mixes: Mixes shall be proportioned by weight except water and admixtures may be batched by volume if desired. Trial mixes and testing to meet requirements of the strengths of concrete specified is the CONTRACTOR's responsibility. Design mix shall contain similar materials as those proposed for use in the WORK.

2. Admixtures: Concrete shall contain an air entraining admixture in proportion so as to provide 4 percent plus or minus 1 percent total air in the concrete as determined by ASTM C 173 or C 231. Set retarding admixtures may be used provided cement content is not reduced. Water reducing admixtures may be used provided they are used in the mix design studies. High-range water reducers (superplasticizers) shall be used only where specifically called for in this Section, otherwise superplasticizers shall not be used without written approval from the ENGINEER. No admixture may contain chlorides, bromides, or fluorides.

3. Water: Clean, potable water. The CONTRACTOR shall provide tests to assure that no more than 200 parts per million total aggregated content of chlorides, bromides, and fluorides are present.

4. If a variance from the Local Authority is required for the precast concrete mix design, the CONTRACTOR shall be responsible for submitting and obtaining the **5,000 psi** precast concrete mix variance. The admixtures used in the mix design shall be used in approved combinations and proportions in accordance with the local requirements.

C. Formwork: Formwork shall be designed to withstand high-frequency vibration and to ensure finished units.

D. Pickup Points and Boxouts: Pickup points, boxouts, and inserts on panel faces and surfaces to be exposed are prohibited except as approved by the ENGINEER.

1.7 DELIVERY, STORAGE AND HANDLING

A. General: Deliver precast concrete units to the job-site in such quantities and at such times as to assure the continuity of construction. Precast members shall be handled to position consistent with their shape and design; they shall be lifted and supported from design incorporated support points and provided with strong backs and other devices as required. Lifting or handling equipment shall be capable of maintaining units during manufacture, storage, transportation, erection, and in position for fastening.

B. Blocking and supports, lateral restraints and protective materials during transport and storage shall be clean, nonstaining, without causing harm to exposed surfaces, including temporary support to prevent bowing and warping. Lateral restraints shall be provided to prevent undesirable horizontal movement. Edges and exposed faces of members shall be protected to prevent straining, chipping, or spalling of concrete.

C. Units shall be marked with date of production and final position in structure in location not visible after erection.

D. Precast units shall be stored off the ground in a manner to keep markings visible, and to prevent cracking, distortion, warping, staining or other physical damage, and they shall be protected from weather, marring, and overload.

E. Stainless Steel Hardware: Stainless steel hardware shall be transported, handled, stored, and protected in wood crates.

PART 2 - PRODUCTS

2.1 CONCRETE MATERIALS

A. Cement: ASTM C 150, Type II, "low alkali," white color. "Low alkali" requirement may be waived if not reactive as defined in Appendix to ASTM C 33. Submit laboratory test reports.

B. Aggregate: ASTM C 33, 1/2-inch maximum coarse aggregate size fine aggregate ratio to total aggregate volume = 0.35 min, 0.55 max.

1. Water Absorption, Coarse Aggregate: ASTM C 127.

2. Water Absorption, Fine Aggregate: ASTM C 128.

C. Reinforcing Steel: ASTM A 615, Grade 60, deformed epoxy coated in accordance with ASTM A 775.

D. Welded Wire Fabric:

1. Plain: ASTM A 185, epoxy coated.

2. Deformed Steel: ASTM A 497, epoxy coated.

3. Fabricated Steel Bar or Rod Mats: ASTM A 184, epoxy coated.

E. Tie Wire: ASTM A 580, Type 316L, cold finished annealed, Huntington Alloy Co. "Monel", "Inconel", or an approved equal.

F. Air Entrainment Admixture: ASTM C 260.

G. Water Reducing or Retarding Admixtures: ASTM C 494, Type C, D, or F/G, with no chloride, bromide, and fluoride ingredients. Use Pozzolith 300-R manufactured by Master Builders, Plastiment manufactured by Sika Chemical Corp., or an approved equal.

H. Silica Fume Slurry Admixture: 45 to 50 percent silica fume, water, and superplasticizer as dispersant. Silica Fume: 85 percent amorphous silicon dioxide in accordance with ASTM C 311; loss on ignition shall not exceed 6 percent and moisture shall not exceed 3 percent in accordance with ASTM C 311. Surface area not less than 10,000 square meters per kilogram at bed porosity of 0.50 in accordance with ASTM C 204.

I. Reduce water in mix by 5.6 to 9.5 lbs for each gallon of slurry added to mix, as recommended by slurry Manufacturer used.

J. Add Los Angeles City approved slurry to concrete mix to achieve 7.5 percent dry silica fume by weight of cement. Mixing procedures as recommended by silica fume slurry manufacturer. Sika "Sikacrete 950"; W.R. Grace "Force 10,000" or approved equal. Submit applicable Los Angeles Research Report with shop drawing submittal.

2.2 SUPPORT DEVICES

A. Unless otherwise specified on the project plans, the following requirements shall apply:

1. Connecting and Support Devices: ASTM A 666, Type 316L stainless steel.

2. Bolts: ASTM A 193, Grade B8M (Type 316).

3. Nuts and Washers: ASTM A 194, Grade 8M (Type 316).

4. Weld Filler Metal for Stainless Steel: Stainless steel to stainless steel; AWS A5.4, Grade 316L filler metal; stainless steel to carbon steel, AWS A5.4, Grade 309 filler metal, 3/32-inch diameter.

5. Primer: Zinc-dust, zinc oxide primer in a phenolic resin spare varnish vehicle, TT-P-641 Type III (for galvanized surfaces).

6. Connecting and support devices, bolts, nuts, washers, inserts, and anchorage devices exposed to view, moisture, or weather shall be hot-dipped galvanized steel.

7. Anchorage devices shall be fabricated from ASTM A 36, and shall be hot-dip galvanized in accordance with ASTM A 123.

2.3 ACCESSORIES

A. Unless otherwise specified on the project plans, the following requirements shall apply:

1. Plates, Angles, Anchors, and Studs: ASTM A 666, Type 316L stainless steel. Austenitic Steel Castings for Embedments and Anchorage Assemblies: ASTM A 351, Type CF3M, with Type 316 stainless steel bolts, nuts, and washers.

2. Bearing Pads: Neoprene, molded to size or cut from molded sheet, 70-80 Type A durometer, ASTM D 2240.

3. Sealant: Specified in Section 07900 - Joint Sealants.

4. Gaskets: ASTM C 509, preformed, firm, cellular, neoprene, sized to be under constant compression at the joints, and manufactured in lengths to minimize field splices.

2.4 FORMS AND MOLDS

A. Forms: Manufacturer's standard with smooth, hard, dense, and rigid casting surface; without bow, warpage, oil canning, or other imperfections. Comply with PCI MNL 117, Division V, Section 2, Article 5.2.1.

B. Form Release Agent: Manufacturer's standard, nonstaining, nonpetroleum based; compatible with concrete surface sealer.

C. Surface Sealer: Clear, flat, penetrating, nonyellowing, nonclouding solution; high concentration of organosilane in an aqueous alcoholic vehicle which is designed to provide water repellent concrete surfaces from which graffiti can be easily removed. Oil-type silicones, paraffins, waxes, vinyls, modified urethanes, or acrylics shall not be used. Sealant shall be tested by Manufacturer and proved compatible with surface sealer.

D. Molds: Fabricate using steel, concrete, fiberglass, reinforced plastic or wood.

1. Selection of materials for molds shall be at manufacturer's option, except that wood shall not be use without specific prior approval of the ENGINEER.

2. Cast elements in molds of rigid construction, accurate in detail with precise corners and arises, and designed to provide close control of dimensions, radii, and details as indicated on the Contract Drawings.

3. Prior to casting of precast elements, molds shall have surface joints, radii, and corners filled, ground, filed, straightened, or otherwise removed to provide finished concrete surface that is smooth and dense, free of honeycombing, air pockets, offsets, sinkages, or other irregularities.

4. Mold Release Agents: Synthetic resin or organic compound containing no wax, oil, silicates, or varnish, and compatible with specified coatings, sealants, fresh concrete, curing process, and adhesives.

5. Cast molds with release agents to facilitate removal of elements from molds.

2.5 MIX

A. Silica Fume Concrete: Minimum 5,000 psi (unless noted otherwise on the project plans), 28-day compressive strength; aggregate 3/8-inch max; water - 305 lbs per cu yd; cement - 750 lbs per cu yd; w/c ratio 0.40 max; slump range 3 inches to 5 inches with silica fume slurry; air entrainment 4 percent plus or minus 1 percent; 7.5 percent dry silica fume by weight of cement, provided through specified silica fume slurry; add superplasticizer to achieve desired working slump for precast concrete as may be required by silica fume slurry Manufacturer. Add colorant as required to achieve match with ENGINEER's sample. Moist cure by spray mist.

2.6 FABRICATION

A. General: Precast concrete units shall be fabricated by a licensed shop in accordance with ACI 318, PCI MNL-116 (structural features), PCI MNL-117 (nonstructural features, surface treatments, patching, and tolerances). Plant records and quality control program shall be maintained during production of precast units. Records and access to plant shall be available to the ENGINEER upon request.

Rigid molds shall be used, constructed to maintain precast unit uniform in shape, size, and finish, free from castings and dents, gouges, oil canning, or other irregularities that will adversely affect appearance or strength of units. Consistent quality shall be maintained during manufacture.

Equipment for handling epoxy-coated reinforcing bars shall have protected contact areas. Bundles of coated bars shall be lifted at multiple pickup points to prevent bar-to-bar abrasion from sags in the bundles. Coated bars or bundles of coated bars shall not be dropped or dragged. Coated bars shall be stored on protective cribbing. The maximum amount of damage shall not exceed 2 percent of the surface area of each bar.

Reinforcing steel, anchors, inserts, plates, angles, and other cast-in-place items shall be embedded as indicated on shop drawings. Reinforcement shall be fabricated and placed in conformance with ACI 318. No tack welding of or to reinforcement permitted. Welding when allowed shall conform to AWS D1.4 requirements. No carbon steel chairs, spacers, nails or tie wire shall be used in positioning reinforcing and embedments.

Adequate reinforcing steel shall be provided to control cracking. Maximum permissible crack width:

Surfaces exposed to weather:	0.005 inch.
Surfaces exposed to view but not weather:	0.01 inch.

Connecting devices, plates, angles, items fit to steel framing members, inserts, bolts, and accessories shall be fabricated to permit initial placement and final attachment.

Anchors, inserts, lifting devices, and other accessories shall be placed and embedded in accordance with approved shop drawings, accurately positioned in their designed location and anchored to prevent dislocation during panel construction. Do not use powder actuated fasteners for surface attachment of accessory items except as specifically approved by the ENGINEER and specifically accepted by the precast unit manufacturer. Flashing reglets shall be placed and embedded continuous and straight, with lifting devices to permit removal after erection.

Units shall be moist cured with water mist to develop concrete quality and to minimize surface drying and appearance blemishes such as nonuniformity, staining, or surface cracking.

Precast units shall be removed from formwork using procedures conforming to PCI MNL-117. Minor patching in plant acceptable, providing structural adequacy and appearance of units are not impaired. Each precast unit shall be identified with corresponding code on erection drawings, in location not visible to finished work.

Repair of damaged epoxy coating, when required, shall be made with patching material conforming to ASTM A 775. Repair shall be in accordance with the material Manufacturer's recommendations.

B. Fabrication and Tooling of Stainless Steel Connections and Embedments: All tools used during fabrication shall be made of stainless steel. Use of carbon steel tools is prohibited.

Welding of stainless steel shall conform to AWS A5.4, AWS B2.1 and AWS D1.1, using tungsten inert gas procedures and 316L filler metal for stainless steel to stainless steel and 309 filler metal for stainless steel to carbon steel. Surfaces shall be sanded smooth (do not grind), and oxidized discoloration removed (blue heat tint). Threaded parts of stainless steel bolts shall be lubricated with graphite suspended in alcohol (Neo-Lube) every time that nut is run on or off the threads. No other lubricant is acceptable.

Erection slings, cables, blocking, hardware and restraints shall be nonmetallic or stainless steel. Cribbing or crating shall be wood.

2.7 FINISH OF PRECAST UNITS

A. Backs and Sides (Unexposed Edges): Smooth, dense, uniform surface free from blemishes. Defects in backs and sides (unexposed edges) shall be repaired as approved.

To reduce possibility of stains occurring during transportation and erection, sealer shall be applied at the plant as recommended by Manufacturer and the precaster and shall be guaranteed in writing that sealer will not alter or yellow the original precast concrete color in any way and that it is compatible with the joint sealants to be used on the project. Seal finish surfaces of precast units to be exposed in completed work as follows: apply a uniform coat of surface sealer in accordance with Manufacturer's written instructions. Apply sealer by method and in quantity required to provide coverage specified by sealer Manufacturer. Forty-eight hours after application of sealer, apply water to face of each panel in sufficient quantity to determine if full sealer coverage was achieved. Panels not fully sealed shall be resealed and retested. A second coat shall be applied at the jobsite after erection and cleanup in accordance with the Manufacturer's instructions.

PART 3 - EXECUTION

3.1 INSTALLATION

A. Examination: The CONTRACTOR shall verify that the structure, anchors, devices, and openings are ready to receive work of this Section. Beginning of installation means acceptance of existing condition.

B. Preparation: The CONTRACTOR shall provide for erection procedures and induced loads, during erection, maintain temporary bracing in place until final support is provided, provide necessary hoisting equipment and safety and protective devices.

C. Erection: The units shall be erected in accordance with approved shop/erection drawings without damage to shape or finish or adjacent work. Damaged panels shall be replaced or repaired. Unless otherwise shown, members shall be erected level and plumb within allowable tolerances.

The CONTRACTOR shall align and maintain uniform horizontal and vertical joints as erection progresses, provide approved shims and wedges as required, and when members required adjustment beyond design or tolerance criteria, discontinue affected work. Units shall be secured in place and field welds, scratches and otherwise damaged steel surfaces shall be touched up.

Field fabrication and erection of stainless steel shall conform to the procedures outlined in the paragraph entitled "Fabrication and Tooling of Stainless Steel Connectors and Embedments."

The vertical units shall be set dry, without grout, attaining joint dimension with lead or plastic shims and spacers.

Pickup points, boxouts, inserts, bearing surfaces, and open spaces at connections and joints shown shall be grouted with non-shrink grout system(s) recommended by the manufacturer of the precast units, in accordance with Section 03315 - Grout. The color and texture of concrete surfaces of adjacent areas shall be finished to match in the same plane. Provide forms or other acceptable method to retain the grout in place until it is sufficiently hard to support itself. Pack spaces with stiff grout material, tamping voids completely full. Place the grout in a manner to finish smooth, plumb, and level with adjacent concrete surfaces. Keep grouted surfaces damp for not less than 24-hours after grout has taken its initial set. Promptly remove grout material from exposed surfaces before its hardens.

D. Tolerances: In accordance with requirements of PCI MNL-117 unless otherwise indicated.

1. Variation from Plane of Location: 1/4-inch in 10 feet and 3/8-inch in 100 feet maximum, compensating not cumulative.

2. Offset from True Alignment between Two Connecting Members: 1/4-inch maximum.

3. Out of Square: 1/8-inch in 10 feet maximum, noncumulative.

4. Variation in Dimensions Indicated in Shop Drawings: Plus or minus 1/8-inch.

5. Misalignment of Anchors, Inserts, Openings: 1/8-inch, maximum.

6. Bowing or Warpage of Units: 1/700 of panel dimension.

7. Exposed Joint Dimension: 3/4-inch plus or minus 1/8-inch.

8. Location of Reglets: 1/4-inch from true position.

E. Joint Sealing: Specified in Section 07900 - Joint Sealants.

3.2 CLEANING

A. Not sooner than 72 hours after joints are sealed, faces and other exposed surfaces of precast units shall be cleaned using a cleaning detergent recommended by the sealer manufacturer and water applied with a soft bristle brush, and thoroughly rinsed using clean water or other approved procedures.

B. Units shall be cleaned when temperature and humidity conditions are such that surfaces dry rapidly (e.g., 70 degrees F and rising, 50 percent Relative Humidity or less).

C. Discolorations which cannot be removed by these procedures shall be considered defective work, and repaired or replaced as directed by ENGINEER.

D. Just before final acceptance by the ENGINEER, clean precast units to remove dirt and stains.

3.3 PROTECTION

A. Adjacent surfaces shall be protected from damage during sealing and cleaning operations and against damage, disfiguration or discoloration from subsequent operations. Noncombustible shielding shall be used during welding operations.

END OF SECTION

THIS PAGE INTENTIONALLY LEFT BLANK

SECTION 05120
STRUCTURAL STEEL

PART 1 - GENERAL

1.1 THE REQUIREMENT

A. The CONTRACTOR shall provide all labor, tools, material, and equipment necessary so as to furnish, fabricate, and install, the structural steel framing and all appurtenant metal parts required for permanent connection of the structural steel, complete, all in accordance with the requirements of the Contract Documents. The CONTRACTOR shall also design all temporary construction braces and sequences of erection.

1.2 RELATED WORK SPECIFIED ELSEWHERE

A. The WORK of the following Sections or Divisions applies to the WORK of this Section. Other Sections of the Specifications, not referenced below, shall also apply to the extent required for proper performance of this WORK.

1. Section 03250 Concrete Accessories.
2. Section 03315 Grout.
3. Section 05300 Metal Deck.
4. Section 05500 Metal Fabrications.
5. Section 09800 Protective Coating.

B. Associated products furnished but installed under other sections:

1. Anchors for casting into concrete.
2. Loose bearing plates to receive Structural Steel.

1.3 REFERENCE SPECIFICATIONS, CODES AND STANDARDS

A. Comply with reference standards and Standard Specifications of the GENERAL REQUIREMENTS.

B. Comply with the following American Institute of Steel Construction (AISC) references, as applicable:

1. AISC 303, "Code of Standard Practice for Steel Buildings and Bridges."
2. AISC "Steel Construction Manual".
3. ANSI/AISC 360, "Specification for Structural Steel Buildings".
4. ANSI/AISC 341 "Seismic Provisions For Steel Buildings" and including the "Commentary".
5. ANSI/AISC 358 "Prequalified Connections for Special and Intermediate Steel Moment Frames for Seismic Applications".

C. Comply with the current provisions of the following American Welding Society (AWS) Codes and Specifications, as applicable:

1. AWS B2.1 Specification for Welding Procedure and Performance Qualification
2. AWS D1.1 Structural Welding Code - Steel

D. Comply with the current references of the American Society for Nondestructive Testing, Inc.

1.	SNT TC-1A	Recommended Practice – Personnel Qualification and Certification in Nondestructive Testing.
2.	ANSI/ASNT CP-189	Standard for the Qualification and Certification of Nondestructive Testing Personnel.

E. Comply with the Research Council on Structural Connections (RCSC) "Specification for Structural Joints Using ASTM A325 or A490 Bolts", as applicable.

F. Comply with the current provisions of the following Codes and Standards, as applicable:

1. American Society of Testing & Materials (ASTM):

ASTM A36	Standard Specification for Carbon Structural Steel.
ASTM A53	Standard Specification for Pipe, Steel, Black and Hot-Dipped, Zinc-Coated, Welded and Seamless.
ASTM A108	Standard Specification for Steel Bar, Carbon and Alloy, Cold Finished.
ASTM A123	Standard Specification for Zinc (Hot-Dip Galvanized) Coatings on Iron and Steel Products.
ASTM A153	Standard Specification for Zinc Coating (Hot-Dip) on Iron and Steel Hardware.
ASTM A167	Standard Specification for Stainless and Heat-Resisting Chromium-Nickel Steel Plate, Sheet, and Strip.
ASTM A193	Standard Specification for Alloy-Steel and Stainless Steel Bolting Materials for High Temperature or High Pressure Service and Other Special Purpose Applications.
ASTM A194	Standard Specification for Carbon and Alloy Steel Nuts for Bolts for High Pressure and High Temperature Service.
ASTM A307	Standard Specification for Carbon Steel Bolts and Studs, 60,000 PSI Tensile Strength.
ASTM A325	Standard Specification for Structural Bolts, Steel, Heat Treated, 120/105 ksi Minimum Tensile Strength.
ASTM A354	Standard Specification for Quenched and Tempered Alloy Steel Bolts, Studs, and Other Externally Threaded Fasteners.
ASTM A370	Standard Test Methods and Definitions for Mechanical Testing of Steel Products.
ASTM A490	Standard Specification for Structural Bolts, Alloy Steel, Heat Treated, 150 ksi Minimum Tensile Strength. "Conform to -08a or later revisions when Zinc coating is required".
ASTM A496	Standard Specification for Steel Wire, Deformed, for Concrete Reinforcement.
ASTM A500	Standard Specification for Cold-Formed Welded and Seamless Carbon Steel Structural Tubing in Rounds and Shapes.
ASTM A563	Standard Specification for Carbon and Alloy Steel Nuts.
ASTM A572	Standard Specification for High Strength Low-Alloy Columbium-Vanadium Steels of Structural Quality.
ASTM A992	Standard Specification Steel for Structural Shapes For Use in Building Framing.
ASTM E709	Standard Guide For Magnetic Particle Testing.
ASTM F436	Standard Specification for Hardened Steel Washers
ASTM F959	Standard Specification for Compressible-Washer-Type Direct Tension Indicators for Use with Structural Fasteners

ASTM F1554	Standard Specification for Anchor Bolts, Steel, 36, 55, and 105-ksi Yield Strength.
ASTM F1852	Standard Specification for "Twist Off" Type Tension Control Structural Bolt/Nut/Washer Assemblies, Steel, Heat Treated, 120/105 ksi Minimum Tensile Strength.
ASTM F2280	Standard Specification for "Twist Off" Type Tension Control Structural Bolt/Nut/Washer Assemblies, Steel, Heat Treated, 150 ksi Minimum Tensile Strength.

2. Government Standards:

   City of Los Angeles, Department of Building and Safety (LADBS) applicable Information Bulletins:

   CSS Caltrans Standard Specifications

   GWP Global Warming Potential (maximum acceptable carbon emission limits, established by the California Department of General Services)

3. Trade Standards and References:

SP-1	"Solvent Cleaning", by the Steel Structures Painting Council, SSPC (also known as The Society of Protective Coatings).
SP-2	"Hand Tool Cleaning" by the Steel Structures Painting Council, SSPC.
SP-3	"Power Tool Cleaning", by the Steel Structures Painting Council, SSPC.

1.4 CONTRACTOR SUBMITTALS

A. General Requirements:

1. Submittals shall be made in accordance with the GENERAL REQUIREMENTS (GR), and include the items indicated herein, and prepared in advance of fabrication, erection, and before incorporated into the work, for review and acceptance by the ENGINEER.
2. Buy Clean California Act.

   a. For project specifications that include GR Section 1601, Buy Clean California Act, bidders shall submit current Environmental Product Declarations (EPDs) for each of the following structural steel: hot-rolled sections, hollow structural sections, and plates, from the originating mill used in the project as well as the corresponding mill certifications. When material comes from different mills, an EPD and mill certification will be required for each mill from which the material has been obtained.
   b. An EPD must conform to the following:

      1) Shall be facility-specific manufacturer/mill EPD.
      2) Be independently verified in accordance with ISO 14025 (Type III).
      3) Be developed according to the guidelines of the applicable Product Category Rule (PCR), as identified by the Department of General Services, State of California.
      4) Have a valid date that has not expired.
      5) Shall not exceed the Global Warming Potential (GWP) limit as required by GR Section 1601.

   c. EPD shall be submitted concurrently with the product's submittal for review and approval.

B. Certifications and Proof of Qualifications from the following:

1. Fabricator and erector: All structural steel fabrication shall be performed in a Los Angeles Department of Building and Safety (LADBS) licensed fabricator shop for structural steel.
2. Shop and field welders: All welding shall be performed by welders certified by LADBS for structural steel.
3. Testing laboratory and technician conducting any of the required tests.
4. Non-destructive testing (NDT) technician.
5. Shear connector manufacturer authorization for each Installer/Operator.

C. Product Data:

1. Submit fabricator's or manufacturer's certification, specifications, recommended installation instructions, laboratory test reports, and all other data required to prove compliance with these specification requirements for the following items.

    a. Structural steel, including certified copies of mill test reports covering chemical and physical properties.
    b. High strength bolts, including nuts and washers, and RCSC related specification.
    c. Unfinished bolts and nuts.
    d. Shear connectors and corresponding welding equipment approval by LADBS.
    e. Structural steel primer paints and finish coatings.

2. Shop drawings shall include Bill of Material with total weight of all fabricated steel, all shop and erection details showing all members and their connections, shear connectors, anchor bolt layouts, schedules for fabrication procedures, and diagrams showing the sequence of erection. In addition, the following requirements shall be met:

    a. Members and connections for any portion of the structure not shown on the contract drawings shall be detailed by the fabricator and indicated on the shop drawings.
    b. Include details of cuts, connections, camber, holes, and other pertinent data, as well as items needed for other work; list types of paints and finish coatings, which are compatible.
    c. All welds shall be indicated by standard welding symbols of the AWS. Show location, size, type, and length of welds. Clearly distinguish between shop and field welds.
    d. All bolts and corresponding holes shall be called out. Show location, size, type, and identify pretensioned and slip-critical high strength bolted connections including the amount of tensioning required.
    e. For connections containing a combination of bolts and welds, indicate sequence of installation between the two connector types.
    f. Shop drawings shall show reference marks and cross references to drawings.
    g. Fabricator shall be responsible for correct interpretation of the contract drawings and shall call to the ENGINEER's attention any discrepancies found.
    h. No deviation shall be made from the contract drawings without prior approval of the ENGINEER in writing.
    i. Provide setting drawings, templates and directions for installing anchor bolts and other required anchors.
    j. Identify locations of welded and/or bolted connections which require necessary testing.
    k. All framing shop drawings shall include final flooring, roofing, parapet and any other relevant elevations.

D. The CONTRACTOR shall submit an erection plan for the structural steel framing that includes drawings and procedures. This erection plan shall conform to the requirements of the AISC "Code of Standard Practice for Steel Building and Bridges". The erection plan shall include shoring and bracing drawings and describe all necessary temporary supports, including the sequence of installation and removal. Submittal shall be prepared and signed by a California licensed civil or structural engineer and be in accordance with Cal OSHA regulations.

E. Test Reports: Submit reports of tests conducted on shop and field welds and bolted connections, including data on type of tests conducted and test results.

F. Welding procedure specifications and welding procedure qualification tests, including those for weld repair, shall be submitted to and approved by the ENGINEER, in triplicate.

G. Documentation and information required in relevant AISC references, including Appendix Q and W of "Seismic Provisions for Steel Buildings.

1.5 QUALITY ASSURANCE

A. Qualifications:

1. Fabricator: Company specializing in the fabrication of the work in this Section shall have a minimum 5-year documented experience. Fabricator shall be a City of Los Angeles Department of Building & Safety (LADBS) licensed/certified Fabricator Shop. When work involves high strength steel, fabricator shall also show proof of compliance with LADBS Information Bulletin P/BC 2008-032 or latest revisions.

2. All welders, excluding shop welders, shall be City of Los Angeles Department of Building & Safety (LADBS) certified welders, in the classification of the work being performed.

3. Erector: Company specializing in the installation of the work of this Section shall have a minimum 5-years documented experience.

4. Technicians performing non-destructive testing (NDT) shall be Certified Level II Technicians in accordance with the American Society for Non-destructive Testing (ASNT)'s references. Certification shall be for the particular NDT being performed.

B. Inspection:

1. Quality Control is the responsibility of the CONTRACTOR for its forces and those of its Subcontractors. Inspection will be provided by the City in accordance with "INSPECTION OF THE WORK" of the GENERAL REQUIREMENTS.
2. Schedule and coordinate with the INSPECTOR all necessary tests, special inspection, and overall general quality assurance inspection.
3. Inspection by Others: Schedule and coordinate all necessary tests, inspections, and quality control services with the authorities having jurisdiction, including the Department of Building and Safety and notify the INSPECTOR that such activity is taking place.
4. If, after fabrication and inspection, the work of this Section is found to be defective and to require re-inspection, cost of such re-inspection will be paid by the CONTRACTOR.
5. Provide labor, equipment, and facilities needed to move and handle the materials to be inspected.
6. Provide access for the testing agencies and inspectors to locations where structural steel work is being fabricated or produced, so that required testing and inspection may be accomplished.

C. Shop Inspection, Fabrication and Tests.

1. Quality Control is the responsibility of the CONTRACTOR for its forces and those of its Fabricators/Subcontractors. As a minimum, conform to Section 8 of AISC's Code of Standard Practice, and when high strength steel is required in the work, conform to LADBS Information Bulletin P/BC 2008-032 or latest revision.
2. Shop Inspection shall be in accordance with "SAMPLING, TESTING AND FABRICATION INSPECTION" of the GENERAL REQUIREMENTS. The CONTRACTOR shall furnish all facilities for the inspection of materials and workmanship in the shop and the INSPECTOR shall be allowed free access to the necessary parts of the work. The INSPECTOR shall have the authority to reject any materials or work not meeting the requirements of these Specifications. Approval of the work by the INSPECTOR, however, shall not relieve the CONTRACTOR of the responsibility of providing a fabricated structure that is in accordance with the drawings and specifications.
3. High-strength bolts shall be installed and verified using the procedure(s) indicated in the Contract Documents, as set forth in the current "Specification for Structural Joints Using ASTM A325 or A490 Bolts".
4. Fabrication of high strength steel shall conform to LADBS requirements as stipulated in Information Bulletin P/BC 2008-032 or latest revision, except field welding is permitted when specifically shown on the Contract Drawings.
5. Welding Inspection:

    a. Except where specified otherwise, the City shall provide Deputy Inspector's visual inspection of welded work. However, where third-party inspection is required, the CONTRACTOR shall perform welding and obtain welding inspection by a qualified inspector from a testing laboratory approved by the INSPECTOR and the Los Angeles City Department of Building and Safety.
    b. Inspect every layer of weld for quality, penetration, and conformity with the design requirements.
    c. When the CONTRACTOR retains the services of a qualified welding inspector, that inspector shall submit a signed report to the ENGINEER and the INSPECTOR, verifying that:

        i. The welding is adequate and was performed in conformity with design requirements.
        ii. Adequate testing methods have been used to determine the quality of the welding.

    d. Welded connections shall be inspected for conformance with the requirements of AWS D1.1 and these specifications.
    e. CONTRACTOR shall provide all equipment for tests specified at no cost to the City.
    f. Welded headed anchors/shear connectors shall be visually inspected by qualified personnel as per AWS D1.1. See LADBS Information Bulletin P/BC 2008-046, "Composite Steel Concrete Construction" for additional requirements, including bend test of shear connectors.

6. Non-destructive testing of shop welds shall include, but not be limited to, the following:

    a. Thirty percent of full penetration welds shall be ultrasonically or radiographically tested by a qualified NDT technician per AWS D1.1 and as noted herein. However, when approved by the ENGINEER, the non-destructive testing rate for an individual welder or welding operator may be reduced to 10 percent, provided the reject rate is demonstrated to be 5 percent or less of the welds tested for the welds or welding operator. Perform all tests in the presence of the INSPECTOR.

i. Exception: For elements/connections that are part of the seismic load resisting system, the CONTRACTOR shall conform to more stringent requirements and increased percentage of testing as noted in the referenced documents including LADBS, "Standard Quality Assurance Plan for Steel Moment Frames" and AISC "Seismic Provisions For Steel Buildings" at no additional cost to the City.

b. Ten percent of partial penetration, fillet, plug, and slot welds, shall be tested using magnetic particle method by qualified NDT technicians per AWS D1.1. Magnetic particle testing shall be in accordance with ASTM E709. If more than twenty percent of the tested welds fail the test, additional welds as determined by the ENGINEER, shall be tested. Perform in the presence of the INSPECTOR.

i. Exception: For elements/connections that are part of the seismic load resisting system, the CONTRACTOR shall conform to more stringent requirements and increased percentage of testing as noted in the referenced documents including LADBS, "Standard Quality Assurance Plan for Steel Moment Frames" and AISC "Seismic Provisions For Steel Buildings" at no additional cost to the City.

c. The CONTRACTOR shall notify the ENGINEER of any non-destructive testing failure result in writing prior to repair. Repair method to be approved by the ENGINEER prior to undertaking the repair.

d. The costs of all tests, with the exception of the ultrasonic testing conducted by the City, specified herein shall be borne by the CONTRACTOR.

7. Welds that are required by the INSPECTOR to be corrected or redone shall be retested as directed, at the CONTRACTOR's expense, and to the satisfaction of the ENGINEER and the INSPECTOR.
8. Fabrication of structural steel for bridge structures shall conform to the appropriate subsections of Section 55-3 of the CSS.

D. Field Inspection, Installation, and Tests:

1. Quality Control is the responsibility of the CONTRACTOR for its forces and those of its Subcontractors. The ENGINEER and the INSPECTOR reserve the right to inspect the work at all times. The CONTRACTOR shall provide temporary ladders, steps, scaffolding, planking, etc., necessary for safe access to the work to be inspected.
2. The Contractor shall arrange and pay for such additional tests and inspections of field work as are required by the Building Code and governing authorities and will prepare test reports for the ENGINEER's review and acceptance.
3. The testing agency will conduct and interpret the tests, and will state in each report whether the inspected work complies with requirements, specifically stating all deviations that exist.
4. Field inspection may include, but not be limited to, the following:

a. Inspection of erection steel work for conformance with this specification and the drawings.

b. Inspection of high strength bolted connections in accordance with "Specification for Structural Joints Using ASTM A325 or A490 Bolts", including pre-installation verification (Section 7), installation (Section 8), and Inspection (Section 9).

c. Verification of welding procedures specification, welding procedures, and qualifications of welding operators, welders and tackers in accordance with AWS D1.1.

d. Visual inspection of field welds and field welded headed anchors\shear connectors in accordance with AWS D1.1 and LADBS, including the bend test.

5. Non-destructive testing of field welds shall include, but not be limited to, the following:

a. Thirty percent of full penetration welds shall be fully ultrasonically or radiographically tested by qualified NDT personnel as per AWS D1.1. If more than ten percent of the tested welds fail the test, additional welds as determined by the ENGINEER, shall be tested.

i. Exception: For elements/connections that are part of the seismic load resisting system, the CONTRACTOR shall conform to more stringent requirements and increased percentage of testing as noted in the referenced documents including LADBS, "Standard Quality Assurance Plan for Steel Moment Frames" and AISC "Seismic Provisions For Steel Buildings" at no additional cost to the City.

b. Ten percent of partial penetration, fillet, plug, and slot welds, shall be tested using magnetic particle method by qualified NDT personnel as per AWS D1.1. Magnetic particle testing shall be in accordance with ASTM E709. If more than twenty percent of the tested welds fail the test, additional welds as determined by the ENGINEER, shall be tested.

i. Exception: For elements/connections that are part of the seismic load resisting system, the CONTRACTOR shall conform to more stringent requirements and increased percentage of testing as noted in the referenced documents including LADBS, "Standard Quality Assurance Plan for Steel Moment Frames" and AISC "Seismic Provisions For Steel Buildings" at no additional cost to the City.

c. The CONTRACTOR shall notify the ENGINEER of any non-destructive testing failure result in writing prior to repair. Repair method to be approved by the ENGINEER prior to undertaking the repair.

6. The testing agency will conduct and interpret the tests, and will state in each report whether the inspected work complies with requirements, specifically stating all deviations there from.
7. The costs of all tests, with the exception of the ultrasonic testing conducted by the City, specified herein shall be borne by the CONTRACTOR.
8. Welds that are required by the INSPECTOR to be corrected or redone shall be retested as directed, at the CONTRACTOR's expense, and to the satisfaction of the ENGINEER and the INSPECTOR.

PART 2 - PRODUCTS

2.1 MATERIALS

A. General: New tested and fabricated stock complying with applicable grades and standards hereinafter referenced. Unless noted otherwise, the material specification noted hereon shall apply. No dual rated steel shall be allowed in this project.

B. Plates and Bars: Per ASTM A36 and ASTM A572 Grade 50.

C. Channels and Angles: Per ASTM A36.

D. W-Shapes: Per ASTM A992.

E. Hollow Structural Sections (HSS): Per ASTM A500, Grade B, structural tubing.

F. Steel Pipe: Per ASTM A53, Type E or S, Grade B.

1. Weight Class: As indicated.
2. Finish: Black, except where indicated to be galvanized.

G. Stainless steel shapes and plates: Per ASTM A167, Type 316L.

H. E70 - T4 weld metal shall not be used for any welds. All welds indicated in members and connections of the seismic load resisting system shall be made with filler metal with a Charpy V-Notch toughness of 20 ft-pounds minimum at zero degrees Fahrenheit. See AISC Seismic Provisions and Contract Drawings for additional requirements.

I. Structural steel shall be cleaned and coated with a shop paint primer; except, that primer shall be omitted for members to be covered with galvanized coating or fire proofed with no further coating.

J. All structural members shall be furnished full length without splices unless otherwise noted or approved by the ENGINEER.

K. Coating: Approved primer and coating as indicated in Section 09800, "Protective Coating".

L. Teflon Base Plates: Reinforced Teflon, pre-bonded to steel plates and combined with neoprene bearing pad and having a static friction coefficient of maximum 6 percent, as manufactured by Fluorocarbon Company of Anaheim or equal.

M. Non-Shrink Grout: Approved non-shrink grout in accordance with Section 03315, "Grout". Minimum compressive strength shall be 3,000 psi in 7 days.

N. Galvanizing: Per A123 or A153 and in accordance with Section 05500, "Miscellaneous Metal Works".

2.2 BOLTS, CONNECTORS, AND ANCHORS

A. High-strength Bolts, Nuts, and Washers: Per ASTM A325, Type 1, heavy hex steel structural bolts; ASTM A563 heavy hex carbon steel nuts; and ASTM F436 hardened carbon steel washer.

1. Finish: Plain, except where indicated otherwise.
2. Direct-Tension Indicators: Per ASTM F959, Type 325, compressible-washer-type.

B. Tension-Control, High-Strength Bolt-Nut-Washer Assembly: ASTM F1852, Type1, heavy hex head steel structural bolts with splined ends; ASTM A563 heavy hex carbon-steel nuts; and ASTM F436 hardened carbon-steel washers. Only manufacturer applied lubricant is permitted.

1. Location: As substitutes where A325, Type 1, plain bolts are specified, when approved by the ENGINEER.
2. Finish: Plain, unless noted otherwise.
3. Quality Assurance: Meet pre-installation verification, installation, and inspection requirements of RCSC specifications.

C. High-Strength Bolts, Nuts, and Washers: Per ASTM A490, Type 1, heavy hex steel structural bolts; ASTM A563 heavy hex carbon-steel nuts; and ASTM F436 hardened carbon-steel washers, plain. Locations as indicated on Drawings.

1. Direct-Tension Indicators: Per ASTM F959, Type 490, compressible-washer-type, plain.

D. Tension-Control, High-Strength Bolt-Nut-Washer Assembly: ASTM F2280, Type 1, heavy hex head steel structural bolts with splined ends; ASTM A563 heavy hex carbon-steel nuts; and ASTM F436 hardened carbon-steel washers. Only manufacturer applied lubricant is permitted.

1. Location: As substitutes where A490, Type 1, plain bolts are specified, when approved by the ENGINEER.
2. Finish: Plain.
3. Quality Assurance: Meet pre-installation verification, installation, and inspection requirements of RCSC specifications.

E. Machine bolts with nuts and washers: Per ASTM A307; hot dip galvanize per A153 not less than 1.25 oz per square foot; use self-locking nuts or lock washers with plain nuts. Locations as indicated on Drawings.

F. Bolts and washers to connect dissimilar metals: Per ASTM A193 and A194, Type 316 stainless steel.

G. Headed Anchor Rods: ASTM F1554, Grade 36, straight, unless noted otherwise.

1. Nuts: ASTM A563 hex carbon steel.
2. Plate Washers: ASTM A36 carbon steel.
3. Washers: ASTM F436 hardened carbon steel.
4. Finish: Plain.

H. Threaded Rods: ASTM A36:

1. Nuts: ASTM A563 hex carbon steel.
2. Washers: ASTM F436 hardened carbon steel.
3. Finish: Plain.

I. Adhesive concrete anchors and/or anchor rods shall use stainless steel anchor rods/assemblies conforming to the requirements of Section 03250 and associated current City of Los Angeles Research Report.

J. Eye Bolts and Nuts: ASTM A108, Grade 1030, cold-finished carbon steel.

K. Sleeve Nuts: ASTM A108, Grade 1018, cold-finished carbon steel.

PART 3 - EXECUTION

3.1 GENERAL

A. Surface Conditions: The CONTRACTOR shall examine the areas and conditions under which work of this Section will be performed. Correct conditions detrimental to timely and proper completion of the Work. Do not proceed until detrimental conditions are corrected.

B. Measurement: The CONTRACTOR shall verify all dimensions, grades, elevations, job conditions, and shall make any field measurements necessary and shall be fully responsible for accuracy and layout of work. The CONTRACTOR shall review the Drawings and any discrepancies shall be reported to the ENGINEER for clarification prior to starting fabrication and erection.

C. Pre-Fabrication And Pre-Erection Conference: Coordinate and arrange for pre-fabrication and pre-erection conferences with the fabricator or manufacturer, INSPECTOR and ENGINEER as required by the Code Requirements and LADBS. Do not proceed with any work prior to the conferences taking place.

3.2 FABRICATION

A. General:

1. Workmanship: In accordance with AISC Specification, Code of Standard Practice, applicable AISC references, with modifications and additional requirements specified here in, as indicated on the Drawings, and as indicated on the shop drawings.
2. Safety Precautions: Conform to latest edition of ANSI/AWS Z49.1, "Safety in Welding and Cutting and Allied Processes". The Contractor shall determine the applicability of any regulatory limitation prior to use.

B. Shop Fabrication and Assembly of Structural Steel:

1. Fabricate items of structural steel in accordance with AISC specifications, and as indicated on the approved Shop Drawings. Fabrication and assembly shall be done in the shop to the greatest extent possible.
2. Properly mark and match-mark materials for field assembly and for identification as to location for which intended.
3. Fabricate for delivery sequence which will expedite erection and minimize field handling of materials.
4. Where finishing is required, complete the assembly, including welding of units, before start of finishing operations.
5. Provide finish surfaces of members exposed in the final structure free from markings, burrs, and other defects.
6. Joints and intersections to be accurately made, tightly fitted, true to plane and accurately fastened.
7. Camber structural steel where indicated.
8. Care shall be taken so over grinding does not occur. The maximum reduction of the base metal thickness, as delivered, shall not be more than 1/32-in or 5% of the element/member thickness, whichever is less. Welds shall not be over ground so as to reduce their effective throat size below what is called for on the drawings.

C. Architecturally Exposed Structural Steel (AESS):

1. Comply with fabrication requirements, including tolerance limits, of AISC's "Code of Standard Practice for Steel Buildings and Bridges" for steel identified as AESS.
2. Fabricate with exposed surfaces smooth, square, and free of surface blemishes including pitting, rust, scale, and roughness.
3. Remove blemishes by filling or grinding and sanding or by welding and grinding and sanding, before cleaning, treating, and shop priming.
4. Fabrication to be performed at LADBS approved fabrication facility.
5. Remove backing bars or runoff tabs, back gouge, and grind and sand steel smooth.

6. Verify that weld sizes, fabrication sequence, and equipment used for AESS will limit distortions to allowable tolerance. Prevent weld show-through on exposed steel surfaces.

    a. Grind butt welds flush.
    b. Grind or fill exposed fillet welds to smooth profile. Dress exposed welds.

D. Thermal Cutting: When permitted, perform thermal cutting by machine to the greatest extent possible.

E. Bolt Holes: Cut, drill, or punch standard bolt holes perpendicular to metal surfaces.

F. Finishing: Accurately finish ends of columns and other members transmitting bearing loads.

G. Cleaning: Clean and prepare steel surfaces that are to remain unpainted according to SSPC-SP 1, "Solvent Cleaning".

H. Shear Connectors: Prepare steel surfaces as recommended by manufacturer of shear connectors. Use automatic end welding of headed-stud shear connectors per AWS D1.1 and the manufacturer's written instructions.

I. Bases and Bearing Plates: Shop weld to columns and to members which are attached to concrete.

3.3 CONNECTIONS

1. Method: Bolted or welded as indicated on the Drawings.
2. Provide bolts and washers of types and sized required for completion of shop fabrication or field erection.
3. Unless otherwise indicated on the drawings, minimum beam framing connections shall be in accordance with AISC "Steel Construction Manual", have a minimum of two 3/4-inch diameter high strength bolts, and be able to develop full strength of members joined.
4. Unless otherwise indicated on the drawings, double-angle members shall be connected together in accordance with AISC Specifications, with a 3/4-inch diameter, high-strength bolt and a filler plate or welded filler plate.
5. Column ends shall be square and milled to have full bearing at splices and at end plates.
6. The CONTRACTOR shall notify the INSPECTOR to make arrangements to inspect high strength bolted connections and welded connections and to perform testing and prepare test reports. This inspection shall be in addition to the inspection specified in subsections 1.5 of this specification.
7. High Strength Bolted Construction:

    a. Install high strength threaded fasteners in accordance with RCSC Specifications.
    b. Use ASTM A325 bolts, with slip critical connections and Type A surface, unless noted otherwise, except for handrails, ladders, and girt connections.
    c. CONTRACTOR shall provide all equipment for testing of bolted connections as required by Code or Contract Documents at no additional cost to the City.

3.4 WELDED CONSTRUCTION

A. Comply with all AWS Referenced Documents and this Contract for procedures, appearance, and quality of welds and welders, methods used in correcting welding work, and the following:

1. Shop welding to be done by a fabricator licensed by LADBS.
2. All field welders shall be LADBS certified.

3. Repair welds only after a repair is deemed an acceptable remedy by the ENGINEER using methods also approved by the ENGINEER prior to performing the repair. Cost of repairs to be borne by the CONTRACTOR.
4. Assemble and weld built-up sections by methods which will produce true alignment of axes without warp.
5. Furnish templates and other devices as necessary for presetting bolts and other anchors to accurate locations. CONTRACTOR shall furnish shop drawing prepared by a California Licensed Civil or Structural Engineer.

B. Stainless steel welding shall conform to the details and standards of workmanship of this specification and AWS D1.1, except that the prequalified welds for carbon steel are not applicable to stainless steel. Welders and weld procedures for stainless steel shall be specifically qualified per AWS B2.1 for the type of stainless steel to be welded and LADBS. Welders and weld procedures for welding of stainless steel to carbon steel shall be qualified per AWS B2.1 and LADBS.

C. Unless otherwise shown, all butt and bevel welds shall be complete penetration.

3.5 HOLES FOR OTHER WORK

A. Provide holes required for securing other work to structural steel framing, and for passage of other work through steel framing members, as shown on the Shop Drawings.

B. Provide threaded nuts welded to framing, and other specialty items as shown, to receive other work.

C. Cut, drill, or punch bolt holes perpendicular to metal surfaces.

D. Do not thermally cut holes or enlarge holes by burning.

E. Drill holes in bearing plates.

3.6 SHOP PAINT PRIMER

A. General:

1. Apply shop paint primer to structural steel work in accordance with Section 09800, "Protective Coating".
2. Shop prime steel surfaces except for the following:

    a. Surfaces embedded in concrete or mortar. However, extend priming of partially embedded members to a depth of 2-inches.
    b. Surfaces to be welded and high-strength bolted with slip-critical connections. Such areas shall be primed and finish coated after connection is made and inspected. See Figure C-3.1 of RSCS Specification for illustration of bolted connection requirements.
    c. Surfaces to receive sprayed-on-fireproofing.
    d. Galvanized surfaces.

3. Apply one coat of primer and two coats of paint to surfaces which are inaccessible after assembly or erection. Change color of the second coat to distinguish it from the first.

B. Surface Preparation:

1. After inspection and before shipping, clean steel work to be painted.
2. Remove loose rust, loose mill scale, and spatter, slag, and flux deposits.
3. Clean and prepare the steel in accordance with the following specifications and standards:

   a. SSPC – SP2: "Hand Tool Cleaning".
   b. SSPC – SP3: "Power Tool Cleaning," where needed.

C. Priming:

1. Immediately after surface preparation, apply structural steel primer paint in accordance with the manufacturer's written instruction and at a rate to provide a uniform dry film thickness of not less than 3.0 mils.
2. Use painting methods which will result in full coverage of joints, corners, edges, and exposed surfaces.

D. Galvanizing:

1. Hot-Dip Galvanizing: Galvanize structural steel members conforming to ASTM A123. Provide minimum 2.0 oz/sq. ft. of galvanized coating.
2. Fill vent holes and grind smooth after galvanizing.
3. Exposed structural and miscellaneous steel not otherwise protected shall be galvanized.

3.7 PRODUCT DELIVERY, STORAGE, AND HANDLING

A. Load structural members in such a manner that they may be transported and unloaded without being excessively stressed, deformed, or otherwise damaged. This includes protection of coating from chipping and scratches.

B. Protect structural steel members and packaged materials from corrosion and deterioration. Material shall be stored in a dry area and shall not be placed in direct contact with the ground. Do not place materials on the structure in a manner that might cause distortion or damage to the members or the supporting structures. Repair or replace damaged materials or structures as directed.

3.8 ERECTION

A. The CONTRACTOR shall comply with the AISC Specifications and Code of Standard Practice, and with specified requirements.

B. High-strength bolts shall be installed per the Specification for Structural Joints using ASTM A325 or ASTM A490 and this section.

C. Anchor Bolts:

1. Provide as indicated on the Contract Drawings; anchor bolts and other connectors required for securing structural steel to foundation and other in-place work.
2. Provide templates and other devices necessary for presetting bolts and other anchors to accurate locations in concrete or masonry construction.

3. Contractor shall arrange and pay for all testing for anchor bolts or dowels as required by the Codes and Standards.
4. For dynamically loaded structures or where vibrations are being induced into the structure/anchor bolts, provide structurally conforming lock nuts, structural nuts with lock washers, or a chemical thread seizing compound, such as "Loctite" or equal, as approved by the ENGINEER.

D. Splices:

1. Splice members only where indicated, and with the approval of the ENGINEER.
2. For splices not indicated, submit structural calculations prepared and signed by a California registered Civil or Structural Engineer.

E. Surveys:

1. Establish permanent benchmarks necessary for accurate erection of structural steel.
2. Check elevations of concrete surfaces, and locations of anchor bolts and similar items, before erection proceeds.

F. Temporary Shoring:

1. Provide temporary shoring and bracing members with connections of sufficient strength to bear imposed loads.
2. Provide temporary guy lines to achieve proper alignments of the structure as erection proceeds.
3. Remove temporary connections and members when permanent members are in place and the final connections have been made.

3.9 SETTING BASES AND BEARING PLATES

A. Prior to the placement of non-shrink grout beneath base and bearing plates, the bottom surface of the plates shall be cleaned of all bond-reducing materials, and concrete and masonry bearing surfaces shall also be cleaned of all bond-reducing materials and roughened to improve bonding.

B. Set loose and attached base plates and bearing plates for structural members on wedges, leveling nuts, or other adjustable devices.

C. Tighten the anchor bolts after the supported members have been positioned and plumbed.

D. Do not remove wedges or shims but, if they are protruding, cut off flush with the edge of the base or bearing plates to assure that no voids remain.

E. Grouting of base plates shall be done with non-shrink grout, of flowable consistency, as specified in Section 03315 "Grout". Grouting shall be completed prior to placing loads on the structure.

F. Finish exposed surfaces, protect installed materials, and allow grout to cure in strict compliance with the manufacturers' recommendations and acceptance requirements by the ENGINEER.

3.10 FIELD ASSEMBLY

A. Set structural frames accurately to the lines and elevations indicated. Align and adjust the various members to form a part of a complete frame or structure before permanently fastening. Clean the bearing surfaces and other surfaces which will be in permanent contact before assembly. Perform necessary adjustments to compensate for discrepancies in elevations and alignment.

B. Level and plumb individual members of the structure within specified AISC tolerances. CONTRACTOR shall provide and install all temporary bracing necessary to carry construction loads until the structure has been completed.

C. Establish required leveling and plumbing measurements at the main operating temperature of the structure, making allowances for the difference between temperature at time of erection and the mean temperature at which the structure will be when completed and in service.

D. Comply with AISC Specifications and Code of Standard Practice for bearing, adequacy of temporary connections, alignment, and the removal of paint on surfaces adjacent to welds.

E. No driven nail or fastener, coreholes or other attachments shall be made or allowed on any steel members without the written approval by the ENGINEER.

3.11 TESTING AND INSPECTION

A. Quality Control is the responsibility of the CONTRACTOR for its forces and those of its Subcontractors. Schedule and coordinate with the INSPECTOR all necessary tests, special inspection, and overall general quality assurance inspection both in the shop and in the field.

B. Inspection by Others: Schedule and coordinate all necessary tests, inspections, and quality control services with the authorities having jurisdiction, including the Department of Building and Safety and notify the INSPECTOR that such inspections are taking place.

3.12 MISFITS AT BOLTED CONNECTIONS

A. Where misfits in erection bolting are encountered, the CONTRACTOR shall immediately notify the ENGINEER. The CONTRACTOR shall submit a method to remedy the misfit for review by the ENGINEER. The ENGINEER will determine whether the remedy is acceptable or if the members must be refabricated. Methods of remedy for consideration by the ENGINEER may include, but are not limited to, the following:

1. Ream holes that must be enlarged to admit bolts and use oversized bolts.
2. Plug-weld misaligned holes and redrill holes to admit standard size bolts.
3. Drill additional holes in the connection, conforming with AISC Standards for bolt spacing and end and edge distances, and add additional bolts.
4. Reject the improperly fabricated member and fabricate a new member to ensure proper fit.

B. Mis-sized or misaligned holes in members shall not be enlarged by burning or by the use of drift pins.

3.13 MISFITS AT ANCHOR BOLTS

A. Where misalignment between anchor bolts and bolt holes in steel members are encountered, the ENGINEER shall be immediately notified. The CONTRACTOR shall submit a method to remedy the misalignment for review by the ENGINEER.

3.14 GAS CUTTING

A. Do not use gas cutting torches in the field for correcting fabrication errors in the structural framing, except on secondary members which are not under stress and will be concealed in the finished structure and when approved by the ENGINEER. Finish gas-cut sections equal to a sheared appearance.

3.15 TOUCHUP PAINTING

A. Immediately after erection, clean field welds, bolted connections, and abraded areas of the shop paint primer. Apply touchup paint primer by brush or spray which is the same thickness and material as that used for the shop paint. Galvanized surfaces which have been field welded or damaged shall be repaired in accordance with Section 05500 Metal Fabrications.

3.16 FIELD PAINTING

A. General:

1. Prepare surfaces in a manner appropriate to the condition, and as approved by the ENGINEER.
2. Clean spots and surfaces where primer coats have been removed, damaged, or burned off, and clean field bolts and other field connections not concealed in the finished work.
3. Remove dirt, oil, and grease.
4. Apply a spot coat of the approved primer.
5. Do not apply paint to wet, damp, oily, or improperly prepared surfaces.

B. Notify the ENGINEER when the work of this Section is ready to receive field painting. Lapse time between surface areas if necessary at no additional cost to the City.

C. Schedule for inspection and secure approval from the ENGINEER prior to field painting.

D. Using spray or brush, as recommended by the manufacturer of the approved paint material, fill all joints and corners and cover the surfaces with a smooth unbroken film of at least 1.5 dry mils thickness.

E. Apply two coats to all surfaces of steel which will be in accessible for painting, after fabrication and erection.

END OF SECTION

THIS PAGE INTENTIONALLY LEFT BLANK

SECTION 05300
METAL DECK

PART 1 - GENERAL

1.1 THE REQUIREMENT

A. The CONTRACTOR shall furnish all tools, equipment, materials, and supplies and shall perform all labor required to complete the work as indicated on the Drawings and specified herein.

B. This section covers the work necessary to fabricate, deliver and install, complete, the steel deck over steel floor/roof framing system.

1.2 RELATED WORK SPECIFIED ELSEWHERE

A. Section 05120 Structural Steel.

B. Section 09800 Protective Coating.

1.3 REFERENCE SPECIFICATIONS, CODES AND STANDARDS

A. Comply with the reference specifications of the GENERAL REQUIREMENTS.

B. Comply with the current provisions of the following Codes and Standards.

1. Material Specifications:

ASTM A653	Standard Specification for Steel Sheet, Zinc-Coated (Galvanized) or Zinc-Iron Alloy-Coated (Galvannealed) by the Hot-Dip Process.
ASTM A1008	Standard Specification for Steel, Sheet, Cold-Rolled, Carbon, Structural, High-Strength Low-Alloy, High-Strength Low-Alloy with Improved Formability, Solution Hardened, and Bake Hardenable.

2. Reference Codes and Standards:

AISI	North American Specification for the Design of Cold-Formed Steel Structural Members.
AWS D1.1	Structural Welding Code - Steel.
AWS D1.3	Structural Welding Code - Sheet Steel.
SDI	Manual of Construction with Steel Deck - Second Edition.
SSPC	SSPC - Paint 15.

1.4 CONTRACTOR SUBMITTALS

A. Submittals shall be made in accordance with the GENERAL REQUIREMENTS.

B. The following submittals and specific information shall be provided, as applicable.

1. Product research reports in compliance with the Los Angeles Department of Building and Safety requirements, erection drawings, and shop drawings signed and stamped by a Civil or Structural Engineer registered in the State of California.

2 Shop and erection drawings shall include, but not be limited to, the following:

a. Plan view layout and section of deck and supporting members, with overall dimensions, and all opening sizes and locations.
b. Flashing, closure plates, and other accessory materials.
c. Fabrication and erection details, indicating the construction loads and type of shoring.

1.5 QUALITY ASSURANCE

A. The CONTRACTOR shall use skilled workers who are thoroughly trained and experienced in the necessary crafts and completely familiar with the specified requirements and methods needed for the proper performance of the Work of this Section.

1. Fabricator must be a licensed fabricator by the Los Angeles City Department of Building and Safety.
2. All welders must be certified by the Los Angeles City Department of Building and Safety.

1.6 INSPECTIONS

A. Shop: Required for all shop-fabricated items.

B. Field:

1. Perform all floor welding under periodic inspection of Registered Deputy Inspector at the CITY's cost, except for instances of re-work, re-testing, and re-inspection, the costs of which shall be borne by the CONTRACTOR. CONTRACTOR shall provide testing equipment for all testing required by Code or Contract at no cost to the CITY.
2. Provide continuous inspection of Registered Deputy Inspector for the placement of the concrete fill.

1.7 HANDLING AND STORING MATERIALS

A. Storage and Handling: Take every precaution to avoid damage and to keep surfaces clean and free from dirt and stains. Provide materials with adequate protection, as required, to prevent corrosion, deformation and other damage during shipment and handling at job-site.

B. Do not use steel deck as a working platform and do not store or place other material or equipment on deck until the deck is permanently attached in position and/or the concrete fill is placed and has reached the required strength. Care must be taken before and during placing operations not to allow heavy concentrated loads on the steel deck. When buggies are used to deliver the concrete, the runways shall be planked to avoid damaging the deck. Replace all damaged deck with new material.

1.8 VARIATION OF DIMENSIONS

A. Uncoated thickness of steel deck shall not be less than 95 percent of the design thickness.

B. Deck panel length shall be within plus or minus 1/2 inch of specified length.

PART 2 - MATERIAL

2.1 STEEL DECK

A. Deliver materials to the job site in original packages with the manufacturer's labels attached.

B. The deck type, profile and thickness (gauge) shall be as shown on the Drawings.

C. Steel deck shall conform with the American Iron and Steel Institute (AISI) "North American Specification for the Design of Cold-Formed Steel Structural Members", with appropriate steel fiber stress limitations and appropriate dead and/or live load deflection limitations.

D. Galvanized steel deck shall be formed from steel sheets conforming to ASTM A 653. The steel shall have received, before being formed, a metal protective coating of zinc conforming to ASTM A 653 light commercial coating, G90.

E. All materials shall be new and free from defects impairing strength, durability, and appearance.

F. Flashings and Closures: Provide for various locations at penetrations and perimeters using galvanized steel as recommended by the manufacturer.

G. General Accessories:

1. Provide accessories specifically designed to be used with the steel deck units supplied to the work, and as normal to uses shown on the Drawings.
2. Provide other materials, not specifically described but required for a complete and proper installation, as selected by the CONTRACTOR subject to the approval of the ENGINEER.

H. Accessories for Composite Steel Deck:

1. Provide sheet steel cover plates as required to close panel ends conditions where panels change direction or abut, and as required to retain concrete fill at edges of steel deck.

PART 3 - EXECUTION

3.1 MEASUREMENTS

A. The CONTRACTOR shall verify all dimensions given on the Drawings and shall make such field measurements as are necessary to properly lay out the work.

B. The CONTRACTOR shall be fully responsible for accuracy of all measurements and layout of the work.

3.2 INSTALLATION OF STEEL DECK

A. The steel deck shall be installed at right angles to the supporting members unless shown otherwise, and shall be installed according to the manufacturer's recommendations, the details shown, and the approved shop drawings.

B. No holes shall be punched through the steel deck during installation. Sheets shall extend over a minimum of three spans where possible. End laps shall be a minimum of 2 inches and shall be staggered. Deck ends over supports shall be installed with a minimum end bearing of 1-1/2 inches. The CONTRACTOR shall furnish and install all closure plates and accessories.

C. The finished steel deck shall be free from buckles and irregularities. All welding and other connections necessary to provide a complete and satisfactory installation shall be detailed on the shop drawings.

D. Steel deck shall be securely fastened to the steel supporting members by arc spot puddle welds, fillet welds of equal strength as shown on the Drawings. Prior to laying the decking over the supporting members, CONTRACTOR shall verify all deck support member elevations with those shown on Drawings. Report deviations of supporting members elevations from required elevations to the INSPECTOR before deck is fastened to the supporting structure.

1. For deck units with spans greater than five feet, side laps and perimeter edges of units between span supports shall be fastened at intervals not exceeding 36 inches on center, using one of the following methods:

    a. Arc puddle welds with minimum 5/8-inch visible outer diameter, or minimum 1-inch long fillet weld.

E. The CONTRACTOR shall qualify all welders and welding procedures in accordance with the latest edition of AWS D1.3, Structural Welding Code - Sheet Steel. Notify the INSPECTOR in advance of welder and welding procedure qualification so that INSPECTOR may witness qualification. Submit to the INSPECTOR, for review and approval, all welding procedures and welder qualification records using forms provided in the appendix to AWS D1.3 welding code prior to any production welding.

F. All welds are to be slagged.

3.3 ERECTION REQUIREMENTS

A. Handling and Erection: Handling and erection shall be in accordance with the latest edition of Steel Deck Institute's "SDI Manual of Construction with Steel Deck" and the following:

1. Care shall be exercised at all times to avoid damage through careless handling during unloading, storing, and erecting.
2. Place the steel deck on the supporting framework and adjust to final position before being permanently fastened. Bring each unit to proper bearing on the supporting beams. Place the steel deck units in straight alignment for the entire length of run and with minimum of space between ends of abutting units. Fasten the units to the steel framework at ends of units and at intermediate supports by welds not less than 3/4-inch width of the steel deck unit. Where two units abut, fasten each unit to the steel framing. Make welds free of sharp points or edges. Welded metal shall penetrate all layers of deck material at end laps and side joints and have good fusion to the support members. Fastening at supports shall be at all edge ribs, plus a sufficient number of interior ribs to limit the maximum spacing between adjacent points of attachments to 12 inches, side laps of individual sheets must be fastened together between supports for spans greater than 5 feet, the fastener spacing shall not exceed 3 feet.
3. Field welding shall not damage the beams and the steel deck.
4. Fasten pour stops to supporting structure according to the Drawings and manufacturer's recommendations.

5. Except due to inclement weather, once installation of a section of steel deck has been started, it shall be continued and uninterrupted until the entire section has been permanently attached in position.
6. Inspect the deck for tears, dents, or other damage that may prevent the deck from acting as a tight and substantial form or that would impair structural capability. Repair tears, dents or other damage with the directions of the ENGINEER.

B. Completion: All units shall be in place, properly and completely anchored and approved before any finishes are applied. Any damaged units for which in the opinion of the ENGINEER, suitable and adequate repairs cannot be made, will be rejected, whether or not delivered or erected; and whole, approved replacement units shall be provided, by the CONTRACTOR, at no additional cost to the CITY.

3.4 TREATMENT OF DAMAGED COATINGS

A. Coating - Submit for approval materials and methods to be utilized for the re-application of coating to areas that were damaged during final construction. Re-apply coatings in an approved manner.

B. Galvanized Coating - For the metal decking and appurtenances thereto, areas of galvanized membrane that are damaged during normal installation process (such as by cutting, drilling and/or welding), need not be repaired, unless otherwise noted.
Where the damage to the galvanized membrane is not normal to the field installation or is specified to be repaired, submit for approval materials and methods to be utilized for the repairs. Damage caused by CONTRACTOR's negligence will typically require repair by the "hot stick" or other metalizing method.

3.5 FINISH PAINTING

A. Finish painting of all exposed steel deck and steel supports shall be as indicated on the Finish Schedule on the Drawings and as specified in Section 09800, Protective Coating.

END OF SECTION

THIS PAGE INTENTIONALLY LEFT BLANK

SECTION 05500
METAL FABRICATIONS

PART 1 - GENERAL

1.1 DESCRIPTION

A. Work Included: Provide and install all miscellaneous metal and metal fabrications in place, as indicated on the Contract Drawings and hereafter specified or needed for complete and proper installation, includes but not limited to the following:

1. Pipe brackets.
2. Pipe bumper posts.
3. All formed and bent plate-14 gauge and heavier.
4. Bolts, rods, dowels, nuts, washers, anchors, brackets and other miscellaneous iron.
5. Steel guard rails.
6. Angle thresholds.

B. Related Work Sections:

1. Documents affecting work of this Section include, but are not necessarily limited to, the GENERAL CONDITIONS, SUPPLEMENTARY CONDITIONS and Sections in GENERAL REQUIREMENTS of DIVISION 1 of these Specifications.
2. Concrete Work in Division 3.
3. Structural Steel in Section 05120.
4. Devices for support of mechanical and electrical materials in Divisions 15 and 16.
5. Caulking and Sealants in Section 07920.

1.2 QUALITY ASSURANCE

A. Qualifications of Personnel: Use only adequate number of skilled workers who are thoroughly trained and experienced in the necessary crafts and are completely familiar with the necessary crafts and with the specified requirements and methods needed for proper performance of the work of this Section.

B. Welder's Qualifications: Currently qualified according to AWS D1-1.

C. Design: Fabricate and erect work in accordance with A.I.S.C.

D. Welding Operations: Perform shop and/or field welding required in connection with work of this Section in strict accordance with pertinent recommendations of the American Welding Society (AWS).

E. Project Conditions: Do not fabricate components which require fitting to structural elements or into finished spaces until dimensions are verified at the job-site.

F. Regulations: Comply with acceptable Uniform Building Code with the Los Angeles City 1992 Amendments.

G. Shop Inspections: Required.

H. Fabricator Qualifications: Firm experienced in successfully producing metal fabrications similar to that indicated for this project with sufficient production capacity to produce work units without causing delay in the Contracted Work.

1.3 SUBMITTALS

A. General: Comply with pertinent provisions in the SUBMITTALS SECTION 01330 in DIVISION 1 - GENERAL REQUIREMENTS of these Specifications.

B. Materials List: Submit list of proposed items to be provided under this Section.

C. Shop Drawings: Submit for all items proposed to be fabricated and installed under this Section. Identify each proposed item with corresponding Contract Drawing detail and Specification references.

D. Samples: Submit physical samples of specified materials for color or texture selection by the Consultant, when so requested.

E. Templates: Provide for anchor and bolt installation by other trades.

F. Manufacturers Specifications and Other Data: Provide as-needed to prove compliance with the specified requirements.

G. Manufacturer's Recommended Installation Procedures: When approved by the Consultant, will become the basis for accepting or rejecting actual installation procedures used on the Work.

H. Certificates: Submit certification that specified surface preparation and primer or galvanized coatings as specified have been applied to steel items and are in accordance with the Specifications.

I. Welder's certificates signed by the Contractor certifying that welders comply with requirements specified under "Quality Assurance" article.

1.4 PRODUCT HANDLING

A. General:

1. Fabricated metal items shall not be fabricated or delivered to the job-site before required review of the Shop Drawings by the City Engineer or the Consultant and returned to the Contractor.

2. Store fabricated metal items above ground on platforms, skids, or other approved supports in a weathertight and dry location until ready for installation.

B. Protection: Use all means necessary to protect the materials and manufactured items of this Section before, during and after installation and to protect the work and materials of all other trades.

C. Replacements: In the event of damage to work of this Section, immediately make all repairs and replacements necessary to the approval of the City Engineer or the Consultant and at no added cost to the City.

D. Materials to be Installed by Others:

1. Deliver anchor bolts and other anchorage devices to be embedded in concrete to the job-site in time before start of concrete work operations.

2. Provide setting drawings, templates and other directions necessary for installation of anchor bolts and devices.

PART 2 - PRODUCTS

2.1 MATERIALS AND COMPONENTS

A. General:

1. All material shall conform with the following requirements and shall be of new stock of the highest grade available, free from defects and imperfections, of recent manufacture and unused. Where two or more identical articles or pieces of equipment are required, they shall be of the same manufacture.

2. All metal surfaces shall be free from any defects which would impair the strength, durability, appearance, and shall be of the best commercial quality, for the purposes intended and adequate to withstand the strains and stresses to which they will be subject. Metals shall be protected from injury at the job, in transit, and until erected in place, inspected, and approved.

B. Miscellaneous Metals: (As Applicable):

1. Iron and Steel (General): Uniform Building Code with the Los Angeles City 1992 Amendments, Section 27.

2. Structural Steel: ASTM A36.

3. Steel Plates, Shapes and Bars: Mild or structural grade conforming to applicable ASTM A36 Specifications.

4. Steel Plates (Bent or Cold Formed): ASTM A283 Grade "C".

5. Gray Cast Iron: ASTM A48, Class 10 or as specified.

6. Malleable Iron Castings: ASTM A47.

7. Steel Tubing: AISI MT1010, electric welded, minimum 14-gage, shapes and size as indicated on the Contract Drawings.

8. Steel Pipe: ASTM A53, Grade A, Schedule 40 black finish or ASTM A120, galvanized when used on building exterior.

9. Steel Bars and Bar-size Shapes: ASTM A306 Grade 65 or ASTM A36.

10. Cold Finished Steel Bars: ASTM A108.

11. Galvanized Carbon Steel Sheets: ASTM A526 with G90 zinc coating in accordance with ASTM A525.

12. Aluminum Castings: 214 aluminum alloy.

13. Aluminum Extrusions: 6053 aluminum alloy temper to suit.

14. Stainless Steel: 18-8 alloy, type 302, No. 4 finish except as otherwise specified.

15. Diamond or checker Pattern Plate: U.S. multigrip floor plate; U.S. Steel Corp. or equal.

C. Miscellaneous Related Materials: (As Applicable)

1. Welding Electrodes: Conform to AISC and ASTM A233 and the Code for Arc and Gas Welding in Building Construction, A.W.S. Publication D1.1 use E-70XX Series Electrodes.

2. Paint Primer (for uncoated ferrious metal): Rust-Oleum Corp. "X-60 Bare Metal Red Primer".

3. Hot-Dip Galvanizing: ASTM A-123 or as applicable after fabrication. See Section 210-3 of the "Standard Specifications".

4. Galvanizing Repair Material: "Galvalloy" by Metalloy Products Co., 1341 Sussex Lane, Newport Beach, California or equal 90% zinc rich cold process repair material.

5. Non-Shrink Grout: "Por-Rok" by Hallemite Mfg. Co. Cleveland, Ohio (Los Angeles, Phone (213) 583-4184).

6. Fasteners: Same material and finish of work to be fastened together; screws to be countersunk oval head type, unless otherwise indicated on the Drawings.

7. Mechanical Anchors: For securing miscellaneous metal items to concrete to be self-drilling concrete anchors, not less than 3/8-inch size, Phillips Redhead, or as otherwise indicated on the Drawings.

8. Bolts and Nuts: Low-carbon hexagon-head type, ASTM A-307, Grade "A" or "B". Lag bolts shall be square-head Type FS FF-B-561.

9. Miscellaneous: All items of miscellaneous metal indicated on drawings, including clip angles, ties, straps, anchors, bolts, angles, rods, and other appurtenances required by details or necessary for proper installations.

10. Dry Pack: A cement-sand mix of 1 part Portland cement to 2-1/2 parts sand by volume with necessary water added to provide for solid compaction.

11. Gasket Material: Soft compressible neoprene rubber strip, thickness and width as indicated on the drawings.

12. Filler Material for Welding Aluminum: Type 53.

13. Concrete inserts:

    a. Threaded or wedge type galvanized ferrous castings of malleable iron complying with ASTM A27;

    b. Provide required bolts, shims, and washers, hot-dip galvanized in accordance with ASTM A153.

14. Brackets, Flanges and Anchors: Cast or formed metal of the same type of material and finish as supported rails, unless otherwise indicated.
15. Welding Rods and Bare Electrodes: Select in accordance with AWS Specifications for the metal alloy to be welded.

2.2 OTHER MATERIALS

Provide other materials, not specifically described but required for a complete and proper installation, as selected by the Contractor subject to the approval of the Consultant.

2.3 SHOP PAINT

A. Primer: Use "10-99 Tnemec Primer" or "Rustoleum Number 5769 Primer.

B. For Repair of Galvanizing: Use a high zinc-dust content paint complying with MIL-P-21035.

2.4 FABRICATION

A. Field Measurements: Secure all field measurements required for proper and adequate fabrication and installation of all work of this Section. Exact measurements are the responsibility of the Contractor.

B. Workmanship: (As Applicable)

1. Except as otherwise shown on the Contract Drawings or the approved Shop Drawings use materials of size, thickness, and type required to produce reasonable strength and durability in the work of this Section.

2. Fabricate with accurate angles and surfaces which are true to the required lines and levels, grinding exposed welds smooth and flush, forming exposed connections with hairline joints, and using concealed fasteners wherever possible. Do not fabricate components which require fitting to structural elements or into finished spaces until dimensions are verified at the job-site.

3. Prior to shop painting or priming, properly clean metal surfaces as required for the applied finish and for the proposed use of the item.

4. On surfaces inaccessible after assembly or erection, apply two coats of the specified primer. Change color of second coat to distinguish it from the first.

5. Work to dimensions shown or accepted on the Shop Drawings, using proven details of fabrication and support.

6. Conform to applicable provisions of the Uniform Building Code with the Los Angeles City 1992 Amendments, Chapter 27.

7. Form exposed work true to line and level, with accurate angles and surfaces and with straight sharp edges.

8. Ease the exposed edges to a radius of approximately 1/32-inch unless otherwise shown.

9. Form bent-metal corners to smallest radius possible without impairing the work.

10. Welding: Electric arc welding, Building Code with the Los Angeles City 1992 Amendments, Chapter 27.

11. Bolting: Bolts to be drawn tight and threads set to secure nuts.

12. Assembly: Assemble all items with parts in true alignment and accurately fitted, joints well made, adequately fastened with butts and sharp edges ground smooth.

13. Conceal all fastenings where practicable and make exposed joints hairline.

14. Nonferrous metal items shall comply with best practice of the trade. Form all sections true to detail and free from defects impairing appearance, strength, and durability.

15. Cut, reinforce, drill and tap miscellaneous metal work as indicated to receive finish hardware and similar items.

16. On surfaces inaccessible after assembly or erection, apply two (2) coats of the specified primer. Change color of second coat to distinguish it from the first coat.

C. Galvanizing: Provide a zinc coating for those items shown or specified to be galvanized as follows and as applicable:

1. ASTM A153 for galvanized iron or steel hardware.

2. ASTM A123 for galvanized rolled, pressed or forged steel shapes, plates, bars and strip 1/8-inch thick and heavier.

D. Field Galvanizing:

1. Required: For repair of protective coating of damaged galvanized surfaces resulting from welding or other construction operations in the shop or at the job-site at no added cost to the City.

2. Method: By "galvalloy" methods, in accordance with manufacturer's directions.

E. Shop Painting:

1. Required: On all uncoated ferrous metals; galvanized ferrous metal not to be shop coated.

2. Paint: Specified paint primer.

3. Painting: Full prime coating, completely covering the metal surfaces; at least 1 coat on all surfaces which will be accessible after fabrication and erection; at least 2 coats on all surfaces which will be inaccessible after fabrication and erection.

4. Remove scale, rust and other deleterious materials before application of Shop Coating.

5. Clean off heavy rust and loose mill scale in accordance with SSPC-SP-2 or SSPC-SP-3 before coating.

6. Remove oil, grease and similar contaminants in accordance with SSPC-SP-1.

F. Carpenter's Iron Work: Furnish all bent or otherwise fabricated bolts, plates, anchors, hangers and other miscellaneous steel items not readily obtainable "OFF-THE-SHELF" and required for anchoring work to concrete, masonry and interior partitions. Fasteners shall be of the same material as the item being fastened. Items to be built into masonry or cast into concrete shall be delivered to the job-site in time to avoid any delay of other trade operations. Anchor, for mechanical anchoring of items to concrete shall be self-drilling type and minimum 3/8-inch size.

G. Rough Hardware:

1. Furnish bent or otherwise custom fabricated bolts, plates, anchors, hangers, dowels, and other miscellaneous steel and iron shapes as required for framing and supporting woodwork, and for anchoring or securing woodwork to concrete or other structures. Straight bolts and other stock rough hardware items are specified in Division 6 sections.

2. Fabricate items to sizes, shapes, and dimensions required. Furnish malleable-iron washers for heads and nuts which bear on wood structural connections; elsewhere, furnish steel washers.

PART 3 - EXECUTION

3.1 SURFACE CONDITIONS

Examine the areas and conditions under which work of this Section will be performed. Correct conditions detrimental to timely and proper completion of the work. Do not proceed until such detrimental conditions are corrected.

3.2 COORDINATION

Coordinate work of this Section as required with other trades to assure proper and adequate provisions in the work of those trades for interface with the work of this Section.

3.3 INSTALLATION

A. General: (As Applicable):

1. Set work accurately into position, plumb, level, true, and free from rack.

2. Anchor firmly into position.

3. Where field welding is required, comply with AWS recommended procedures of manual-shielded metal-arc welding for appearance and quality of weld and for methods to be used in correcting welding work.

4. Grind exposed welds smooth, and touchup shop prime coats.

5. Do not cut, weld, or abrade surfaces which have been hot-dip galvanized after fabrication and which are intended for bolted or screwed field connections.

6. Dissimilar Materials: Where metals are in contact with plaster, concrete or other type metals, paint contact faces of the metal before installation, with a heavy bituminous coating:

B. Immediately After Erection: Clean the field welds, bolted connections, and abraded areas of shop priming. Paint the exposed areas with same material used for shop priming.

3.4 PIPE BUMPER POSTS (BOLLARDS)

A. Required: At locations indicated on the Contract Drawings.

B. Materials: Galvanized steel pipe, size and length as indicated on the Drawings.

C. Installation: Set plumb in concrete footings of size indicated on the Drawings, to indicated height; pipe post to be filled with concrete to top and top to be tooled to shed water. Top of exposed portion of footing to be tooled to shed water.

3.6 STEEL GUARD RAILING

A. Fabrication: From galvanized steel pipe in accord with approved Shop Drawings, pipe sizes as noted on the Drawings. Form all bends, where required, smoothly and with no reduction in cross section. Grind all welds smooth. Definitions in ASTM E985 for railing related terms apply.

B. Installation: True to line, plumb and level, with base plates secured to floor as indicated on the Drawings.

3.7 FRAMES AND GRATES FOR TRENCH DRAINS

A. Type: Heavy traffic grate and frame, Alhambra Foundry Co. Ltd. No. A-2422, grate section sizes as indicated on the Contract Drawing. Overall length of each drain as indicated on the Contract Drawings.

B. Coat with asphalt paint.

C. Installation: Set frames in concrete at time of placing concrete so that when grate is installed within the frame, the grate will be flush with the surface of the concrete floor as indicated on the Contract Drawings.

3.10 CLEAN-UP AND ADJUSTMENT

A. Clean-up:

1. During the progress of the work, conform to provisions of Section 01740 of the GENERAL REQUIREMENTS, keep the premises free from debris and waste resulting from work of this Section. Upon completion of this Section remove all surplus materials and debris from the job-site.

2. Immediately after erection, clean the field welds, bolted connections and abraded areas of shop priming. Paint the exposed areas with the same material used for the shop priming.

B. Adjustments: Adjust all operating parts and/or assemblies as may be required to provide the necessary function and smooth operation.

END OF SECTION

THIS PAGE INTENTIONALLY LEFT BLANK

SECTION 06100
ROUGH CARPENTRY

PART 1 - GENERAL

1.1 THE REQUIREMENT

A. The CONTRACTOR shall furnish all tools, equipment, materials, and supplies and shall perform all labor required to complete the work as indicated on the Drawings and specified herein.

B. The work shall include, but not be limited to, completion of the following principal items:

a. Wood framing, including plates, studding, joists, rafters, purlins, and similar framing elements.

b. Wood blocking, furring, stripping, backing, and nailers, as shown, specified, or otherwise required for securing work, except for such items as are specified to be furnished by other trades.

c. Plywood sheathing, board sheathing, sidings, and starter boards.

d. All rough hardware appurtenant to the work of this Section, as defined in Article 2.5 Rough Hardware of Part 2.

1.2 RELATED WORK SPECIFIED ELSEWHERE

A. Section 03300 Cast-In-Place Concrete.

B. Section 05500 Miscellaneous Metalwork.

1.3 REFERENCE SPECIFICATIONS, CODES AND STANDARDS

A. Comply with the reference specifications of the GENERAL REQUIREMENTS.

B. Comply with the current provisions of the following Codes and Standards.

a. Federal Specifications:

FF-B-561C	Bolts, (Screw), Lag.
FF-B-575C	Bolts, Hexagon and Square.
FF-B-584E(1)	Bolts, Finned Neck; Key Head; Machine; Ribbed Neck; Square Neck; Tee Head.
FF-B-588C(1)	Bolt, Toggle: and Expansion Sleeve, Screw.
FF-N-105B(3) Int. Amd. 4	Nails, Brads, Staples and Spikes; Wire, Cut, and Wrought.

FF-N-836D(1)	Nut: Square, Hexagon, Cap, Slotted, Castle, Knurled, Welding and Single Ball Seat.
FF-S-111D	Screw, Wood.
FF-S-1362	Stud, Plain, General Purpose.
U.S. Commercial Std. CS-35	Pine Plywood.
U.S. Commercial Std. CS-253	Structural, Glue-Laminated, Timber.
U.S. Product Std. PS-1	Softwood Plywood.
U.S. Product Std. PS-58	Hardboard.

b. Commercial Standards:

AITC 104	Timber Construction Manual, Timber Construction Details.
AITC 105	Timber Construction Manual, Recommended Practice for the Erection of Structural Timber Framing.
ASTM D 226	Specification for Asphalt-Saturated Organic Felt Used in Roofing and Waterproofing.
AWPA C1	AWPA Manual of Recommended Practice, Standard for Preservative Treatment by Pressure Process--All Timber Products.
FPL Bulletin 1069	Forestry Products Laboratory Bulletin.
RIS	Standard Specifications for Grades of California Redwood Lumber by the Redwood Inspection Service.
SPIB	Grading Rules for Southern Pine Lumber of the Southern Pine Inspection Bureau.
UBC Std. 25-10	Structural Glued-Laminated Timber.
UBC Std. 25-12	Preservative Treatment for Pressure Processes and Quality Control Standards.
WCLIB	Standard Grading and Dressing Rules No. 16 of the West Coast Lumber Inspection Bureau.
WWPA	Standard Grading Rules for Western Lumber, Western Wood Products Association.

1.4 CONTRACTOR SUBMITTALS

A. Submittals shall be made in accordance with the GENERAL REQUIREMENTS.

B. The following submittals and specific information shall be provided.

a. Manufacturer' catalog showing rough hardware conforming to or equivalent to hardware shown.

b. Engineering calculations for design for all glue-laminated beams and wood trusses or joist, signed by a registered professional engineer.

c. Fabrication and erection drawings for the glue-laminated beams and wood trusses or joist.

d. Certificates of compliance.

e. Certificate of Conformance indicating conformance with Commercial Standard, CS 253 entitled "Structural Glued Laminated Timber" and grade compliance.

1.5 QUALITY ASSURANCE (NOT USED)

PART 2 - PRODUCTS

2.1 UNTREATED LUMBER

A. Grading: Lumber shall be graded in accordance with the rules of one of the following associations: "Standard Grading and Dressing Rules No. 16" of the West Coast Lumber Inspection Bureau (WCLIB); or "Grading Rules for Western Lumber" published by Western Wood Products Association.

B. Grade Marking: Each piece of lumber shall bear the official grade mark of one of the above-mentioned grading rules. The Association standards for grading and grade marking of the lumber shall be acceptable to the ENGINEER.

C. Size Dressing: All lumber, except as otherwise specified or shown, shall be dressed to size in accordance with the standards of the association under which the lumber is graded. All lumber shall be S4S unless otherwise specified.

D. Drying: All lumber incorporated in the work, except where otherwise specified, shall be air or kiln dried to a moisture content of not more than 19 percent and not less than one percent.

E. Framing Lumber Grades: Grades of framing lumber for various uses shall conform to the following:

Use	Grade	Grading Rule	Stress F_b
Rafter, joist, studding 2 x 6 and larger, miscellaneous framing, ledgers, etc.	No. 1	Para. 123-b	2050 psi rep.
Studding and plates 2 x 4 to 4 x 4	Const.	Para. 112-b	1200 psi rep.
Beams and Stringers	Select. Struct.	Para. 130-a	1600 psi
Post and Timber	No. 1 Struct.	Para. 131-b	1350 psi

2.2 REDWOOD

A. Redwood shall conform to applicable requirements of the "Standard Specifications for Grades of California Redwood Lumber" of the Redwood Inspection Service (RIS). Redwood lumber used for foundation plates or in contact with concrete shall be Foundation Grade, S4S, redwood.

2.3 TREATED LUMBER

A. Marking: Each piece of treated lumber shall bear the approval mark of an approved testing agency.

B. Kiln Drying: Kiln-dried lumber shall be treated with a water-borne preservative and shall have a maximum moisture content of 15 percent after treatment.

C. Pressure-Treated Lumber: All wood nailing blocks, sills, and plates resting on or embedded in concrete or masonry within 18 -inches of grade shall be pressure-treated in accordance with the Los Angeles City Building Code. Creosote shall not be used.

D Preservative: Two thorough coats of preservative, Zehrung "Pentaseal"; Sherwin Williams, "Kemwood Penta," or equal, shall be applied at least 2 hours before installation, to all surfaces which come in contact with, or are set close to concrete and plaster, except lumber specified to be pressure-treated. Tank dipping or pressure-treating may be used.

E. Cuts: Wherever necessary to cut, notch, tap, drill, or frame treated lumber, newly cut or bored surfaces shall be treated with 2 heavy coats of the same preservative used in the original treatment. The minimum penetration depth shall be 1/4-inch.

F. Fire-Retardant Treated Lumber: Where required, fire-retardant treatment for lumber shall conform to the requirements of the Los Angeles City Building Code.

2.4 PLYWOOD AND HARDBOARD

A. Plywood: Plywood shall conform to the requirements of U.S. Product Standard PS-1 as specified herein. All plywood panels shall be marked with grade mark of the American Plywood Association. The mark shall identify the plywood as to species, glue type, and grade in compliance with the applicable commercial standard. Except as otherwise specified or shown, plywood shall be Douglas Fir, Exterior, C-D, S1S. Plywood for other specific applications shall be as follows:

   a. Plywood for use in concrete forms shall conform to the requirements of Section 03100, "Concrete Formwork", or Section 03300 "Cast-In-Place Concrete".

   b. Plywood for back-up boards behind telephone equipment, electrical equipment, or communication equipment shall be Douglas Fir, A-C INT grade for interior locations and A-C-EXT for exterior locations.

   c. Plywood tool boards and protective wall paneling shall be Douglas Fir N-D-INT grade.

B. Hardboard: Hardboard shall be temper-treated panels manufactured from interfelted ligno-cellulose fibers consolidated under heat and pressure in a hot press to produce a smooth, hard-surfaced material which is resistant to water and stains. Hardboard shall conform to the requirements of U.S. Product Std. PS-58.

C. Used Lumber: For concealed, non-load-bearing applications, used form lumber (except plywood) which is undamaged and complies with requirements specified herein may be reused if permitted by the ENGINEER. If permitted by the ENGINEER, form plywood which is undamaged may be re-used in non-exposed locations where allowed by code if it otherwise meets all requirements for the particular use.

2.5 ROUGH HARDWARE

A. General: The term "rough hardware" shall include nails, screws, lag screws, bolts, nuts, washers, plates, metal fasteners, and framing anchors; anchor bolts which are to be embedded into concrete, concrete masonry, or brick masonry; and similar items employed in erection and construction of the rough carpentry work. Rough hardware shall be of standard manufacture, approved by a recognized agency for the intended applications and shall be provided with laboratory test results on capabilities when requested by the ENGINEER. All hardware items shall be steel unless otherwise specified or shown. Specially fabricated rough hardware shall be hot-dip galvanized after fabrication.

B. Anchors and Fasteners: Anchors and fasteners for securing wood items, unless otherwise shown, shall be as follows:

   a. Bolts, nuts, and studs shall conform to the requirements of Federal Specifications FF-B-584E(1), as applicable and as specified in Section 05500, "Miscellaneous Metalwork".

b. Nails and staples shall conform to Federal Specification FF-N-105B(3) Int. Amd. 4, and shall be the type and size best suited for the intended application. Nails shall be galvanized steel, aluminum, or stainless steel, as appropriate, where exposed to weather. Nails used for fastening plywood to nailers on steel beams shall be of wire gage noted for common nails, but of proper length. Nails used for exterior (exposed to view) plywood siding, siding, or trim shall be stainless steel.

c. Wood screws shall conform to the requirements of Federal Specification FF-S-111D for the style and material as shown or best suited for the purpose. Wood screws shall be stainless steel where exposed to view or to weather.

d. Lag screws or lag bolts shall conform to the requirements of Federal Specification FF-B-561C for the type and grade best suited for the purpose. Lag screws or lag bolts shall be galvanized where exposed to view or weather.

e. Toggle bolts shall conform to the requirements of Federal Specification FF-B588C(1) for the type and grade best suited for the purpose.

f. Expanding-type anchors shall be steel expansion type Phillips Drill Company "Red Head" anchors; McCullock Industries "Kwick-Bolt;" or equal. Lead caulking anchors will not be permitted. Size shall be as shown. Expansion type anchors which are to be embedded in grout may be steel. Non-embedded buried or submerged anchors shall be stainless steel.

g. Power-driven pins for installation in concrete or steel shall be heat-treated steel alloy. If the pins are not inherently sufficiently corrosion-resistant for the conditions to which they are to be exposed, they shall be protected in an acceptable manner. Pins shall have capped or threaded heads capable of transmitting the loads the shanks are required to support. Pins that are connected to steel shall have longitudinal serrations around the circumference of the shank.

C. Metal Framing Devices: Metal framing devices shall be specially-designed joist hangers, header hangers, framing anchors, post anchors, and structural framing connectors fabricated from steel and hot-dip galvanized after fabrication. They shall be designed to conform to code requirements. Documentation of load tests by an independent testing laboratory shall be submitted to the ENGINEER. The framing devices shall be as manufactured by Silver Metal Products, Inc.; Easy Ardes Rib, Simpson Co.; Heckmanor Building Products; Harlen Metal Products, Inc.; or equal. The framing devices shall be equal or superior to those shown as per design, friction, and loading. The framing device shall be provided complete with the proper sized nails, bolts, lag bolts, or other required fasteners called for in the design calculations for the framing devices.

D. Plyclips: Plyclips shall be extruded aluminum clips, manufactured from 6063-T6 aluminum alloy, and designed for intended use. Size shall be as required for plywood or shall be as shown.

2.6 MISCELLANEOUS PRODUCTS

A. Building Paper: Building paper or felt shall be non-perforated, asphalt-saturated organic felt conforming to ASTM D 226, 15 lb/100 sq ft.

B. Termite Shields: Termite shields shall be not less than 26-gage, zinc-coated steel or 30-gage, terne steel coated with 40 lb of coating material per 100 square feet.

2.7 GLUE-LAMINATED MEMBERS

A. Glue-Lam Timbers: All glue-laminated wood timbers shall be designed to meet the requirements of Los Angeles City Building Code, and shall conform to the American Institute of Timber Construction (AITC) requirements.

B. Glue-Lam Beams: Glue-lam beams shall conform to the following requirements:

   a. All glue-laminated wood beams shall be AITC "Industrial Appearance Grade" and shall bear the quality mark of the American Institute of Timber Construction (AITC).

   b. All glue-laminated beams shall be continuous unless otherwise shown and shall be provided with arches and/or curves as necessary or required, where shown.

   c. All lumber for glue-laminated wood beams shall be Coast Region Douglas Fir meeting the requirements of U.S. Commercial Std. CS-253 and the Los Angeles City Building Code. Thicknesses of lumber for laminations shall be in accordance with standard practice of the approved manufacturer.

   d. Adhesives shall conform to U.S. Commercial Std. CS-253 requirements for wet use beams.

   e. All beams shall receive one coat of an approved sealer and shall be load wrapped for shipment to the project site.

PART 3 - EXECUTION

3.1 GENERAL

A. Preliminaries: Rough carpentry shall be as specified, shown, and as necessary for complete work. The CONTRACTOR shall verify drawing dimensions with actual field conditions and shall inspect related work and adjacent surfaces, and shall report to the ENGINEER all conditions which could prevent proper execution of this work.

B. Work Coordination and Performance: The CONTRACTOR shall coordinate all the work and cooperate with the subcontractors and the trades doing related work. All work of construction shall be carefully planned and laid out. All work shall be performed under the direction of a capable, experienced supervisor.

C. Rough Hardware: All rough hardware not otherwise specified and which is necessary for the satisfactory execution of framing, including nails, spikes, dowels, fasteners, and similar incidentals shall be provided and installed by the CONTRACTOR. Rough hardware shall be coordinated, furnished, installed, and embedded as shown and as required for a complete work.

D. Framing: Framing members and assemblies shall be closely fitted, accurately set, and rigidly secured to required lines, levels, and arrangements shown. Framing shall be accurately and neatly cut and shall be securely nailed, spiked, or otherwise fastened in place in a workmanlike manner. Timber connectors and installation thereof shall conform to applicable requirements of AITC 104 and AITC 105.

3.2 FASTENERS AND FRAMING DEVICES

A. Nailing: Where nail spacing is not otherwise regulated by the Building Code, nails shall not be driven closer together than 1/2 their length unless driven in drilled holes, nor driven closer to the edge of a member than 1/4 of their length. When necessary to prevent splitting, holes shall be drilled slightly smaller than nail diameters. The nails shall penetrate the second or farther member not less than 1/2 the nail length. Common nails shall be used unless otherwise specified or shown.

B. Bolts and Nuts: Malleable or cut-steel washers shall be provided under bolt heads and nuts except where bearing on steel plates or other steel attachments or where flat-head countersunk bolts are shown. Bolt holes shall be drilled 1/32--inch to 1/16--inch larger diameter than the bolts they are to accommodate, and shall be bored true-to-line. Members shall be clamped together and bolts shall be driven in place and nuts drawn up tightly. Bolts shall be drawn tight again immediately prior to enclosing with finish or, if left exposed, upon completion of other work. Holes at anchor bolts embedded in concrete may be 1/16--inch larger than bolt diameter.

C. Screws: Lag and wood screws shall be screwed, not driven, into place. Holes to receive lag screws shall be bored first of the same diameter and depth as shank, then continued to depth equal to length of screw with diameter equal to the base of the screw thread. Screws shall penetrate into the farther member a distance equal to a least 7 times the diameter of the screw shank. Washers shall be installed under each lag screw head bearing on wood.

D. Metal Framing Devices: Metal framing devices shall be furnished and installed where shown. Nails for the framing devices shall be as furnished or recommended by the manufacturer of the anchor device. All nails shall be driven to their full depth at all holes in anchors. Bolt and lag fasteners shall be drawn tight.

E. Power-Driven Pins: Power-driven pins shall be installed by a craftsman who is certified by the manufacturer as being qualified to install the manufacturer's pins. Pins shall be driven in one initial movement by an instantaneous force that has been carefully selected to attain the required penetration. Drive pins shall conform to the following requirements where "D" = pin's shank diameter:

MATERIAL PENETRATED BY PIN	MATERIAL'S MINIMUM THICKNESS	PIN'S SHANK PENETRATION IN SUPPORTING MATERIAL	MINIMUM SPACE FROM PIN'S CL TO EDGE OF PENETRATED MATERIAL	MINIMUM PIN SPACING
Concrete	16D	6D minimum	14D	20D
Steel	1/4-inch	Steel thickness	4D	7D

3.3 FRAMING

A. Strength Considerations: Structural wood framing members shall not be spliced between bearing points or supports. Approval shall be secured from the ENGINEER before cutting of any wood members that may weaken structure. Due care shall be exercised in placing framing so that structural and other important members do not require cutting for openings, pipes, vents, conduits, or ducts. Bearing surfaces on which wood structural members are to rest shall be finished to give full, true, and even support. Wedges or shims shall not be used to correct faulty work. Wood members which have been split or otherwise damaged to such an extent as to impair their strength shall be removed and replaced at no additional cost to the CITY.

B. Cutting and Notching: Only skilled workmen shall be used for all cutting and framing of wood members required to accommodate structural members, routing of piping, conduit, ducts, and the installation of mechanical, electrical, or other apparatus or equipment. Members shall not be cut, notched, nor bored more than 1/4 of their depth without adequate and approved reinforcing.

C. Plate/Sill Material: Plates and sills shall be foundation grade redwood or Douglas fir, pressure-treated with a water-borne preservative meeting the requirements of AWPA Standard P5. Only pressure processes described in AWPA C1 shall be used.

D. Plate and Sill Installation: Bottom plates and sill plates which are secured to concrete shall be located as shown. The anchor bolts shall be located as shown or as required by Referenced Standard if not shown. The plates and sills shall be leveled with shims. Washers shall be placed and nuts shall be tightened to level bearing, after which the space (1/2--inch minimum) between the sill and concrete shall be dry-packed with concrete.

E. Wall Framing: Studs shall be installed at a spacing of 16 -inches on centers unless otherwise shown. A single plate shall be provided at the bottom, and a double plate at the top of all wall framing unless otherwise shown. Joints in upper and lower members of the top plate shall be staggered not less than 4-feet. All stud walls and partitions shall have a continuous row of blocking or firestopping which shall form a complete and effective separation for the entire width of the wall or partition. Blocking shall be located so that there will be no concealed air spaces greater than 7-feet in horizontal or vertical dimension. Defective materials, including crooked, warped, or bowed materials shall be replaced by the CONTRACTOR at no cost to the CITY.

F. Blocking and Backing: All blocking and backing in walls and ceilings shall be nominal 2-inch thick material of a depth as needed and shall be accurately located around light fixtures, ceiling registers, grilles, and other required mechanical and electrical items. The blocking shall fit snugly and shall be spiked into the supporting framing members. Wood blocking (backing) to receive sheathing, siding, metal lath, and gypsum board shall be provided wherever necessary for securing the facing materials.

G. Backing for Specialties and Accessories: Backing shall be accurately located and installed for all building specialties, toilet accessories, and finish hardware items as required.

H. Concrete-Embedded Blocks: Where required and approved, nominal 2--inch thick nailing blocks (dovetail type) shall be provided in concrete to receive superimposed wood stripping, grounds, and backing. Applied grounds or stripping shall be securely nailed into wood nailing blocks, using nails of approved length.

I. Furring: Furring shall be 2-inch by 3-inch wood studs spaced at 16 -inches on center, laid flat to the wall. Light metal framing may be substituted at non-thermal wall conditions. Other sizes and spacing of furring or stripping shall be as specified or shown in the Contract Documents.

J. Rafters and Joists: Rafters and joists shall be placed crown up and supported firmly on the framing below. Care shall be used in selection and placing of members. Positive and secure attachment shall be provided. The CONTRACTOR shall provide double joists and double headers to receive trimmers at both sides of the openings which cut or interrupt normal rafter spacing.

K. Roofs: Roofs shall be erected level or shall be sloped as shown or approved.

L. Plywood Siding: Plywood siding shall be applied in accordance with the manufacturer's published recommendations and the American Plywood Association standards. Exposed nails used for exterior plywood siding shall be of stainless steel.

M. Plywood Sheathing: Plywood sheathing shall be installed with face grain across supports and end joints shall be over joists and shall be staggered. Blocking shall be provided at all unsupported edges.

N. Fire Stops: Fire stops shall be not less than 2-inch nominal thickness and of the same width as the studs. Strips of full-thickness fiber glass or rock wool shall be installed around pipes, ducts, conduits, and other penetrations through fire stops.

O. Sleepers: All sleepers for mechanical equipment and curb openings shall be provided and coordinated with appropriate trades for locations and sizes. Sleepers shall be ripped to conform to roof slope if necessary.

P. Sand Blasting: Members required to be sandblasted shall be lightly sand blasted. Field sandblasting shall conform to requirements of governing authorities. Adjacent surfaces shall be covered or otherwise protected during sandblasting.

3.4 CLEANUP

A. Upon completion of the rough carpentry work, clean up all waste materials and debris resulting from this operation and dispose of such waste material and debris of the site.

END OF SECTION

SECTION 07900
JOINT SEALANTS

PART 1 - GENERAL

1.1 THE REQUIREMENT

A. The CONTRACTOR shall furnish all tools, equipment, materials, and supplies and shall perform all labor required to complete the work as indicated on the Drawings and specified herein.

B. This section covers all joint sealant as specified herein and shown on Drawings.

1.2 RELATED WORK SPECIFIED ELSEWHERE

A. Section 03290 Joints in Concrete.

1.3 REFERENCE SPECIFICATIONS, CODES AND STANDARDS

A. Comply with the reference specifications of the GENERAL REQUIREMENTS.

B. Federal Specifications:

TT-S-001543A Sealing Compound, Silicone Rubber Base, (Calking, Sealing and Glazing in Buildings and Other Structures).

TT-S-00230C(2) Sealing Compound, Elastomeric Type, Single Component, (For Calking, Sealing, and Glazing in Buildings and Other Structures).

1.4 CONTRACTOR SUBMITTALS

A. Submittals shall be made in accordance with the GENERAL REQUIREMENTS.

B. The following submittals and specific information shall be provided.

a. Product Data: Surface preparation and installation instructions.

b. Samples: Material proposed for use showing color range available, and marked with the manufacturer's name and product identification.

c. Quality Control Submittals:

(1) Applicator Qualification: Documentation showing minimum of 5 years experience installing sealants in projects of similar scope.

(2) Certificates of Compliance: Proposed materials meet Specification requirements.

d. Contract Closeout Submittals: Guarantee.

1.5 QUALITY ASSURANCE (NOT USED)

1.6 PRODUCT HANDLING

A. Deliver sealants to the jobsite in sealed containers, each bearing manufacturer's name and product designation.

B. Store and protect sealant products from damage, deterioration, and contamination in accordance with manufacturer's written recommendations.

1.7 ENVIRONMENTAL CONDITIONS

A. Ambient Temperature: Between 40 and 80 degrees F (4 and 27 degrees C) when sealant is applied.

1.8 GUARANTEE

A. Sealed Joints: Against adhesive and cohesive failure of sealant and for watertightness of sealed joints for a period of 5 years after date of final completion of sealants.

PART 2 - PRODUCTS

2.1 MATERIALS

A. Like Items of Materials: End products of one manufacturer to achieve standardization for appearance, maintenance, and replacement.

B. CONTRACTOR Option: Immersible sealant may be substituted for nonimmersible sealant of the same material.

C. Characteristics:

a. Uniform, homogeneous.

b. Free from lumps, skins, and coarse particles when mixed.

c. Nonstaining, nonbleeding.

d. Hardness of 15 minimum and 50 maximum, measured by Method ASTM C 661.

2.2 SEALANT MATERIALS

A. Type 1 - Silicone, Nonsag, Not Immersible:

a. Silicone base, single-component, chemical curing; ASTM C 920, Type S, Grade NS, Class 25; Federal Specification TT-S-001543, nonsag type, Class A.

b. Capable of withstanding movement up to 50 percent of joint width.

c. Manufacturer: Dow Corning Corp. No. 790; General Electric Silpruf; Sonneborn Sonolastic Omniseal; or equal.

B. Type 2 - Multi-Part Polyurethane, Self-Leveling, Immersible:

a. Polyurethane base, multi-component, chemical curing; ASTM C 920, Type M, Grade P, Class 25 and Federal Specification TT-S-00227, self-leveling Type I, Class A.

b. Capable of being continuously immersed in water.

c. Manufacturer: Sonneborn Sonolastic Paving Joint Sealant; Pecora Corp. Urexspan NR-200; H. S. Peterson Co. Iso-Flex 880GB; Mameco International Vulkem 245; or equal.

C. Type 3 - Multi-Part Polyurethane, Nonsag, Immersible:

a. Polyurethane base, multi-component, chemical curing; ASTM C 920, Type M, Grade NS, Class 25 and Federal Specification TT-S-00227, nonsag Type II, Class A.

b. Capable of being continuously immersed in water.

c. Manufacturer: H. S. Peterson Co. Iso-Flex 881; Mameco International Vulkem 922; Product Research Corp. PRC 270; Sonneborn Sonolastic NP-II; or equal.

D. Type 4 - Multi-Part Polyurethane, Nonsag, Not Immersible:

a. Polyurethane base, multi-component, chemical curing; ASTM C 920, Type M, Grade NS, Class 25 and Federal Specification TT-S-00227, nonsag Type II, Class A.

b. Manufacturer: Sonneborn Sonolastic NP-II; Pecora Corp. Dynatrol II; Tremco Dymeric; H. S. Peterson Co. Isoflex 2000; Mameco International Vulkem 227; or equal.

E. Type 5 - One-Part Polyurethane, Immersible:

a. Polyurethane base, single-component, chemical curing; Federal Specification TT-S-00230, Type I or II, Class A.

b. Capable of being continuously immersed in water, withstand movement of up to 25 percent of joint width.

c. Manufacturer for Nonsag: Sonneborn Sonolastic NP-I; Sika Chemical Corp., Sikaflex-1a No. 430; Mameco International Vulkem 116; or equal.

d. Manufacturer for Self-Leveling: Sonneborn Sonolastic SL-1; Mameco International Vulkem 45; Sika Chemical Corp. Sikaflex 12SL; or equal.

F. Type 6 - One-Part Polyurethane, Not Immersible:

a. Polyurethane base, single-component, chemical curing; ASTM C 920, Type S, Grade NS, Class 25 and Federal Specification TT-S-00230, nonsag Type II, Class A.

b. Manufacturer: Pecora Corp. Dynatrol I; Tremco Dymonic; Sonneborn Sonolastic NP-I; or equal.

G. Type 7 - Multi-Part Polysulfide, Immersible:

a. Polysulfide base, two-component, chemical curing; ASTM C 920, Type M, Grade P or NS, Class 25 and Federal Specification TT-S-00227, Type I self-leveling, Type II nonsagging, Class A, uniform, homogeneous and free from lumps, skins, and coarse particles when mixed.

b. Capable of being continuously immersed in water.

c. Manufacturer: W. R. Meadows CM-60, two-part; Sonneborn Sonolastic Two; or equal.

H. Type 8 - One-Part Polysulfide, Nonsag, Not Immersible:

a. Polysulfide base, single-component, chemical curing; ASTM C 920, Type S, Grade NS, Class 12 1/2; Federal Specification TT-S-00230, Type II nonsag, Class A.

b. Capable of withstanding movement up to 20 percent of joint width.

c. Manufacturer: W. R. Meadows CM-60, one-part; Sika Chemical Corp. Sikaflex 440; Product Research Corp. PRC 7000; or equal.

I. Type 9 - One-Part Acrylic Terpolymer, Nonsag, Not Immersible:

a. Acrylic base, single-component, solvent curing; Federal Specification TT-S-00230, Type I nonsag, Class B.

b. Capable of withstanding movement up to 7.5 percent of joint width; Shore "A" hardness of 55 maximum.

c. Manufacturer: Pecora Chemical Corp. 60 + Unicrylic; Tremco Mono; or equal.

2.3 BACKUP MATERIAL

A. Nongassing, extruded, closed-cell round polyethylene foam rod, compatible with sealant used, and as recommended by sealant manufacturer.

B. Size: As shown or as recommended by sealant material manufacturer. Provide for joints greater than 3/16-inch wide.

C. Manufacturer: Haveg Industries Minicel; Dow Corning Ethafoam SB; Sonneborn Sonofoam; Hercules, Inc., HBR; or equal.

2.4 BOND BREAKER

A. Pressure Sensitive Tape: Recommended by sealant manufacturer to suit application.

2.5 JOINT CLEANER

A. Noncorrosive and nonstaining type, recommended by sealant manufacturer; compatible with joint forming materials.

2.6 PRIMER

A. Nonstaining type recommended by sealant manufacturer to suit application.

2.7 SEALANT COLOR

A. Unless specifically noted, match the color of the principal wall material adjoining the area of application.

2.8 TAPE SEALANT

A. Closed cell polyvinyl chloride (PVC) foam coated on both sides with a modified acrylic pressure-sensitive adhesive.

B. Color: Black.

C. Size: 3/4-inch width by length as required by thickness as recommended by manufacturer, for particular application.

D. Properties:

a. Tensile Strength (ASTM D 412, Die C): 80 psi.

b. Elongation (ASTM D 412, Die C): 125 percent.

c. Compression Set (ASTM D 1056): 30 percent max.

d. Compression Deflection (ASTM D 1056) at 25 Percent Deflection: 2.5 psi.

e. Low Temperature Flexibility, 5 Hours at -40 Degrees F: No cracking.

f. Heat Resistance/Maximum Shrinkage, 70 Hours at 212 Degrees F: 1.5 percent.

g. Staining (ASTM D 925) on Most Substrates: None.

h. Water Absorption by Weight at 30 Percent Compression: 24 percent.

i. Density per Cubic Foot (ASTM D 3574): 10 pounds.

j. Thermal Conductivity (k factor): 0.24.

2.9 PREFORMED SEALS

A. Preformed Compressible Joint Seals:

a. Widths Up to 5-Inches: Acme Highway Products Corp., Buffalo, NY, Acmaseal J-Series; Watson-Bowman Associates, Inc., Buffalo, NY, WA-Series; H. S. Peterson Co. Isoflex Neoprene Seal, LS-Series, Pontiac, MI; or equal.

b. Other Widths: Series or model recommended by seal manufacturer.

PART 3 - EXECUTION

3.1 GENERAL

A. Use of more than one material for the same joint is not allowed unless approved by the sealant manufacturer.

B. Install joint sealants in accordance with ASTM C 962.

C. Horizontal and Sloping Joints of 1 Percent Maximum Slope: Use self-leveling (Grade P) joint sealant.

D. Steeper Sloped Joints, Vertical Joints, and Overhead Joints: Use nonsag (Grade NS) joint sealant.

E. Use joint sealant as required for the appropriate application and as follows:

Joint Size	Sealant Type
Less than 1-inch	1,2,3,4,5,6,7,8, or 9
Less than 2-inch	1,2,3,4, or 7
Over 2-inch	As per manufacturer's recommendation

3.2 PREPARATION

A. Verify that joint dimensions and physical and environmental conditions are acceptable to receive sealant.

B. All surfaces to be sealed shall be dry, sound, and free of dust, loose mortar, and other foreign materials.

   a. Mask adjacent surfaces where necessary to maintain neat edge.

   b. Starting of work will be construed as acceptance of all subsurfaces.

C. Verify that joint shaping materials and release tapes are compatible with sealant.

D. Examine joint dimensions and size materials to achieve required width/depth ratios.

3.3 INSTALLATION

A. Use joint filler to achieve required joint depths, to allow sealants to perform intended function.

   a. Install backup material as recommended by sealant manufacturer.

   b. Where possible, provide full length sections without splices; minimize number of splices.

B. Use bond breaker where recommended by sealant manufacturer.

C. Apply sealant within environmental conditions stated above.

   a. Consult manufacturer when sealant cannot be applied within these temperature ranges.

D. Seal all joints around window, door and louver frames, expansion joints, and elsewhere as indicated.

E. Joint Sealant Materials: Follow manufacturer's recommendation and instructions, filling joint completely from bottom to top, without voids.

F. Joints: Tool slightly concave after sealant is installed.

a. When tooling white or light color sealant, use a water wet tool.

b. Finish joints free of air pockets, foreign embedded matter, ridges, and sags.

G. Tape Sealant: Locate where indicated and install in accordance with manufacturer's instructions.

3.4 PREFORMED SEALS

A. Prepare joint surfaces clean and dry, free from oil, rust, laitance, and other foreign material.

B. Construct joints straight and parallel to each other and at the proper width and depth.

C. Install within environmental conditions stated above.

D. Apply joint sealant manufacturer's approved primer and adhesive in accordance with manufacturer's instructions.

E. Install seal in accordance with manufacturer's instructions.

3.5 CLEANING

A. Clean surfaces next to the sealed joints of smears or other soiling resultant of sealing application.

B. Replace any damaged surfaces resulting from joint sealing or cleaning activities.

C. Clean up and dispose of all waste materials and debris resulting from this operation off the site.

3.6 JOINT SEALANT SCHEDULE

A. This schedule lists the sealant types acceptable for each joint location. Use as few different sealant types as possible to meet the requirements of this project.

Joint Location	Sealant Type(s)
1. Expansion/Contraction and control Joints at:	
Concrete Walls	1,3,4,5,6,7
Concrete Floor Slabs	2,5
Masonry Walls	1,3,4,5,6,7

2. Material Joints At:

Metal Door & Louver Frames (Exterior)	1,5,6,8
Metal Door & Louver Frames (Interior)	1,5,6,8,9
Wall Penetrations (Exterior)	1,5,6,8
Wall Penetrations (Interior)	1,5,6,8
Floor Penetrations	5,6,7
Ceiling/Roof Penetrations	1,3,4,5,6,7
Sheet Metal Flashings	1,3,5,7

3. Other Joints:

Threshold Sealant Bed	5
Immersed Concrete (Vertical and Sloped)	3,5
Immersed Concrete (Horizontal)	2,5
Openings Around Pipes, Conduits, and Ducts Through Fire-Rated Construction	11
Concrete Form Snap-Tie Holes	1,4,6

END OF SECTION

SECTION 07920
CAULKING AND SEALANTS

PART 1 - GENERAL

1.1 SUMMARY

A. Throughout the Contracted Work furnish all tools, equipment, materials, and supplies and perform all labor to provide a positive barrier against passage of air or moisture from the exterior.

1. Caulk and Seal around entire exposed perimeters of all penetrations and openings through walls and for slabs on grade where any item is installed in the opening or through the penetrations.

2. Caulk and seal the sheet metal flashings and other items penetrating through the roof.

B. Related Sections:

1. Documents affecting work of this Section include, but are not necessarily limited to the GENERAL CONDITIONS, SUPPLEMENTARY CONDITIONS and Sections in DIVISION 1 - GENERAL REQUIREMENTS of these Specifications.

2. Masonry Work in Division 4.

3. Waterstops and expansion joint fillers for structural joints in Sections of Division 7 - THERMAL AND MOISTURE PROTECTION.

1.2 QUALITY ASSURANCE

A. Reference Standards:

1. All materials specified herein shall conform to the requirements of the publications hereinafter listed, to the extent that the requirements therein specified are not in conflict with the provisions of this Section.

2. References to "ANSI Standards" shall mean the American National Standards Institute Publication A116.1-1967 "Two Component Elastomeric Sealing Components for the Building Trade".

B. Qualifications of Manufacturers: Products used in the work of this Section shall be produced by manufacturers regularly engaged in the manufacture of similar items and with a history of successful production acceptable to the City Engineer or the Consultant. Manufacturer shall have been on business of manufacturing the specified types of Sealants for not less than 10 years.

C. Qualification of Installers:

1. Installers shall be thoroughly trained and experienced in the necessary skills and be thoroughly familiar with the specified requirements and shall have a minimum of 5 years' experience installing caulking and sealants.

2. Installers shall be completely familiar with the joint details shown on the Contract Drawings and installation requirement hereinafter specified in this Section.

1.3 SUBMITTALS

A. Manufacturer's Data: Comply with provisions in the SUBMITTALS SECTION 01330 in DIVISION 1-GENERAL REQUIREMENTS of these Specifications.

1. Submit within 45 days after execution of the Contract:

a. A complete materials list showing all items specified to be furnished and installed under this Section.

b. Sufficient data to demonstrate that all materials meet or exceed the specified requirements.

c. Specification, installation instructions and general recommendations from manufacturer showing procedures under which it is proposed that materials will be installed.

d. Upon approval by the City Engineer or the Consultant, the proposed installation procedures will become the basis for inspection and acceptance or rejection of actual installation procedures used on the work.

B. Samples: Submit separate samples for each type of caulking or sealant material, together with manufacturer's data, all as necessary to fully demonstrate functional and service ability characteristics that comply with the specified requirements. Obtain approval prior to delivery of materials to the job-site for material substitutions. Samples of the sealant in concrete construction expansion joints shall be applied between 1-inch thick concrete blocks to the full size and shape of sealant in the joints indicated. Conform to the provisions of MATERIALS, SAMPLING AND TESTING of Section 31 in the GENERAL CONDITIONS of these Specifications.

1.4 GUARANTEE

A. Guarantee: The guarantee period specified in Section 28 of the GENERAL CONDITIONS of these Specifications shall hereby be extended to two (2) years. Contractor shall provide the City Engineer with a written guarantee against any inherent or developed defects in material or in installation and file five (5) copies of same with the City Engineer or the Consultant as a prerequisite for final acceptance of the work.

B. Warranty shall further state that installed sealants are warranted against the following:

1. Water leakage through sealed joints.

2. Adhesive or co-adhesive failure of sealant.

3. Staining of adjacent surfaces caused by migration of sealant or primer.

4. Chalking or visible color changes of the cured sealant.

1.5 DEFECTIVE WORK

A. Work will be adjudged defective by the City Engineer or the Consultant if leakage results from failure of sealant or caulking to bond to adjacent work or if it hardens, cracks, shrinks, or runs or stains adjacent work.

B. Remove defective work, clean joints and install new caulking and/or sealant materials as approved by the City Engineer or the Consultant at no added cost to the City.

1.6 PRODUCT HANDLING

A. Delivery and Storage: Deliver all materials of this Section to the job-site in their original unopened or unbroken containers with all labels intact and legible at time of use. Store only under conditions recommended by the manufacturer concerning shelf life, temperature humidity, ensuring the fitness of the material when installed. Do not retain on the job-site any material which has exceeded the manufacturer's recommended shelf life.

B. Protection: Use all means necessary to protect the materials of this Section before, during and after installation and to protect work and materials of other trades.

C. Replacements: In the event of damage, immediately make all repairs and replacements necessary to the approval of the City Engineer or the Consultant, at no added cost to the City.

PART 2 - PRODUCTS

2.1 GENERAL

Materials shall conform to the referenced standards specified hereinafter, to the extent that they do not conflict with requirements of this Section.

2.2 SEALANTS

A. Type of Sealants:

1. Asphalt Sealant shall conform to Federal Specifications SS S 1614 (1), EDOCO Technical Product No. 3060 or Burke's No. 400 Sealing Compound.

2. Elastomeric Joint Sealant: Federal Specification TT-S-00227E (3) for 2-part rubber base sealant or Federal Specification TT-S-230A for 1-part synthetic rubber base sealant.

a. Use "Class A" sealant for non-traffic bearing horizontal surfaces.

b. Use "Class B" sealant for vertical surfaces.

B. Sealant Colors:

1. Colors for each sealant installation will be selected by the City Engineer or the Consultant from standards colors normally available from the manufacturer. Should such standard color is not available from the approved manufacturer except at additional charge, provide all such colors at no additional cost to the City.

2. In concealed installations and in partially or fully exposed installations, where so approved by the City Engineer or the Consultant, use standard gray or black sealant.

2.3 CAULKING MATERIALS

A. Caulking Compound: W.R. Grace & Co. "Hornflex Standard Gun Grade" or "Thiokol" approved polysulfide sealant for all other joints including miscellaneous vertical joints, exterior door, window and louver frames, etc.

B. Caulking Stop: Polyurethane for open joints of size 1-1/2 times the joint width opening and depth no more than 3/8 inch for sealant bite.

C. Oakum: Untarred, picked (loose), fine hemp fibers.

*2.4 BACKUP MATERIALS FOR SEALANTS

A. Primers and Bond Breakers: As recommended by the sealant manufacturer in their published instructions.

B. Backer Rods and Other Backing Materials: Type as recommended by the Sealant manufacturer.

1. Closed-cell resilient urethane or polyvinyl chloride foam;

2. Closed-cell polyethylene foam;

3. Closed-cell sponge of vinyl or rubber;

4. Polychoroprene tubes or beads;

5. Polyisobuthlene extrusion;

6. Oil-less dry jute.

C. Filler for Use with Asphalt Sealant: Asphalt impregnated, as per ASTM D 1715.

D. Filler of Use with Elastomeric Sealer: Plain type as per ASTM D 1752 Type II or Type III.

E. Surface Covers: (Where Simple bond-prevention is necessary).

1. Polyethelene Tape, pressure-sensitive adhesive, required only to hold tape to the construction material.

2. Aluminum foil conforming to MIL-SPEC-MIL-A-148E.

3. Heavy wax paper conforming to Fed. Spec. UU-P-270.

F. Other Materials: All other materials, not specifically described but required for complete and proper caulking and installation of sealants, shall be first quality of their respective kinds as selected by the Contractor subject to the approval of the City Engineer or the Consultant.

PART 3 - EXECUTION

*3.1 INSPECTION AND INSTRUCTIONS

A. Manufacturer's Inspection: Just prior to start of application of each type of sealant, provide initial instructions at start of work in order to verify if physical conditions are proper in order to properly instruct applicators and that supervision provided is by qualified personnel handling such materials.

B. Examine the areas and conditions under which work of this Section will be performed. Correct conditions detrimental to the proper and timely completion of the work. Do not proceed until detrimental conditions have been corrected.

C. Contractor to notify the manufacturer at least 72 hours prior to time inspection is required.

D. Failure or refusal of manufacturer to provide inspection and supervision shall constitute grounds for non-acceptability of materials manufactured, even though specified hereinafter in this Section.

E. Applicator shall report to the Contractor any detrimental conditions impairing the proper installation of such materials. Contractor shall correct all such detrimental conditions to the full satisfaction of the City Engineer or the Consultant or the Inspector at no added cost to the City.

3.2 WORKMANSHIP

A. Application: In strict accordance with ASTM C-962 and ASTM C-1193 and manufacturer's instructions and supervised by the manufacturer's approved applicator. Manufacturer to provide field assistance to insure proper mixing of sealants, cleaning of surfaces, and application of materials.

B. Cleaning: Immediately remove caulking and/or sealant materials from adjacent surfaces not specified to receive sealant, and/or caulking materials. Leave work in a condition satisfactory to the City Engineer or the Consultant.

C. Protection: Carefully protect adjoining surfaces from staining. Carefully provide necessary strippable masking where required to limit extent of caulking and sealant material application.

3.3 PREPARATION (AS APPLICABLE)

A. Joint Cleaning: Joints shall be free of foreign materials full depth of joint. Joint surfaces to be clean, dry and free from grease, oil, wax or other foreign matter, which would tend to destroy or impair adhesion. Clean surfaces in accordance with manufacturer's instructions.

B. Priming: Joint surfaces to be primed in accordance with sealant manufacturer's instructions.

C. Steel Surfaces:

1. Steel surfaces in contact with sealant shall be sandblasted or scraped or wire-brushed to remove mill scale.

2. Use solvent to remove oil and grease, wiping the surfaces with clean rags.

3. Remove protective coatings on steel by sandblasting or by a solvent that leaves no residue.

* D. Aluminum Surfaces:

1. Surfaces in contact with sealant shall be cleaned of temporary protective coatings, dirt, oil, and grease.

2. When masking tape is used as a protective cover, remove tape just prior to application of sealant.

3. Use only such solvents to remove protective coatings as recommended for that purpose by the aluminum manufacturer, and which are non-staining.

* E. Concrete and Ceramic Tile Surfaces:

1. All contact surfaces shall be dry, sound, well brushed and wiped free from dust.

2. Use solvent to remove oil and grease, wiping the surfaces with clean rags.

3. Treated surfaces shall have the surface treatment removed by sandblasting or wire brushing.

4. Remove all laitance and mortar from the joint cavity.

5. Where backstop is required, insert an approved backup material into the joint cavity to required depth.

3.4 INSTALLATION OF BACKUP MATERIAL

Use only the backup materials recommended by the Sealant manufacturer and approved by the City Engineer or the Consultant for the particular installation, compressing the backup material 25% to 50% to secure a positive and secure fit. When using backup of tube or rod stock, avoid lengthwise stretching of material. Do not twist or braid hose or rod backup stock.

1. Sealant bite 1/8" to 2" but never more than 2 to 1/4 of joint width.

2. Use foam backup rod or bond breaker tape to minimize joint configuration.

3.5 PRIMING

Use only the primer recommended by the Sealant Manufacturer and approved by the City Engineer or the Consultant for the particular installation. Apply primer in strict accordance with manufacturer's recommendations as approved by the City Engineer or the Consultant.

3.6 SCHEDULE

A. Elastomeric Caulking Joint Compound: Use in expansion and contraction joints where limited movement is anticipated and areas where general caulking is required.

B. Multi-Part Sealant: Use in expansion and construction joints and all joints in all concrete walking surfaces where indicated or noted on the Contract Drawings and/or specified in the Specifications.

3.7 INSTALLATION SEALANTS

A. General: Prior to start of installation in each joint, verify the joint type according to Contract Drawing Details and that the required proportion of width to depth of joint has been secured.

B. Equipment: Apply sealants under pressure with hand or power actuated gun or other appropriate means. Guns shall have nozzle of proper size and shall provide sufficient pressure to completely fill joints as designed.

* C. Application:

1. Caulking performed under other Sections of these Specifications shall comply with all of the following requirements unless specific changes are specified in those other Specification Sections.

2. Fill all joints where no backing exists partially with filler material (that is compatible with specified caulking or sealant material).

    a. Metal to Metal Joints: Minimum joint width of 1/4-inch.

    b. All Other Joints: Maximum 3/4-inch, unless otherwise detailed.

    c. Minimum joint depth shall be 1/4-inch, for metal joints; 2-inch for concrete, masonry, and plaster work joints.

3. Apply sealants under sufficient pressure to completely fill all voids.

4. Apply non-sagging type sealants in vertical joints.

5. Apply self-leveling type sealants in horizontal joints.

6. Apply non-tracking sealants, having a shore hardness range of 40 to 55, to concrete, masonry or tile expansion joints, subject to foot or vehicular traffic.

7. Finish all exposed joints smooth, flush with surfaces, or recessed as shown.

8. Provide strippable masking for factory applied sealing materials to prevent dirt contamination until parts are assembled.

9. Tool all joints to the profile shown on the Contract Drawing Details.

10. Caulk and seal open joints left between openings and both sides of frames on the exterior of building and all other joints between building units or materials where Contract Drawings call for caulking and/or sealants, interior and exterior or where necessary to completely seal off joints against passage of water, air, or dust.

D. Cleaning Up:

1. Remove masking tape immediately after joints have been tooled.

2. Clean adjacent surfaces free from sealants as the installation progresses. Use solvent or cleaning agent as recommended by the sealant manufacturer.

3. Remove excess caulking and sealants from adjacent surfaces of joints, leaving the work in a neat and clean condition.

E. Concrete Expansion and/or Contraction Joints: Construct such joints as indicated on the Contract Drawings and specified in DIVISION 3 - CONCRETE.

END OF SECTION

SECTION 09800

PROTECTIVE COATING

PART 1 GENERAL

1.01 THE REQUIREMENT

A. The Contractor shall furnish all tools, equipment, materials, and supplies and shall perform all labor required to complete the protective coating of all specified surfaces including all surface preparation, pretreatment, coating application, touch-up of factory-coated surfaces, protection of surfaces not to be coated, cleanup, and appurtenant work, all in accordance with the requirements of the Contract Documents.

B. The following surfaces shall not be protective coated hereunder unless shown or specified herein, or elsewhere in the Contract Documents.

1. Concrete.
2. Stainless steel.
3. Machined surfaces.
4. Grease fittings.
5. Glass.
6. Equipment nameplates.
7. Maintenance hole frames and covers.
8. Platform gratings, stair treads, door thresholds, and other walk surfaces.

C. The coating system schedules summarize the surfaces to be coated, the required surface preparation, and the coating systems to be applied. Coating notes on the drawings are used to show exceptions to the schedules, to show or extend the limits of coating systems, or to clarify or show details for application of the coating systems.

1.02 RELATED WORK SPECIFIED ELSEWHERE (NOT USED)

1.03 REFERENCE SPECIFICATIONS, CODES AND STANDARDS

A. References herein to "SSPC Specifications" or "SSPC" shall mean the published standards of the Steel Structures Painting Council, 4400 Fifth Avenue, Pittsburgh, PA 15213.

B. References herein to "NACE" shall mean the published standards of the National Association of Corrosion Engineers, P.O. Box 986, Katy, TX 77450.

C. Comply with the reference specifications of the GENERAL REQUIREMENTS.

D. Comply with the current provisions of the following Codes and Standards.

1. Commercial Standards:

ANSI A13	Scheme for Identification of Piping Systems.
ANSI/AWWA C105	Polyethylene Encasement for Ductile Iron Piping for Water and Other Liquids.

ANSI/AWWA C203	Coal-Tar Protective Coatings and Linings for Steel Water Pipelines - Enamel and Tape-Hot-Applied.
ANSI/AWWA D102	Painting Steel Water-Storage Tanks.

2. Federal Specifications:

TT-P-28F	Paint, Aluminum, Heat Resisting (1200F).

1.04 CONTRACTOR SUBMITTALS

A. Submittals shall be made in accordance with the GENERAL REQUIREMENTS.

B. Samples: The Contractor shall submit samples of all paint, finishes, and other coating materials specified herein, in accordance with the GENERAL REQUIREMENTS. Paint or coating samples shall be submitted on 8-1/2-inch by 11-inch sheet metal. Each sample shall be completely coated over its entire surface with one protective coating material, type, and color.

C. Coating Materials List: The Contractor shall provide 8 copies of a coating materials list which indicates the manufacturer and the coating number, keyed to the coating systems herein, prior to or at the time of submittal of samples.

D. Paint Manufacturer's Information: For each paint system to be used the Contractor shall submit the following listed data at least 30 days prior to painting.

1. Paint manufacturer's data sheet for each product used, including statements on the suitability of the material for the intended use.
2. Paint manufacturer's instructions and recommendations on surface preparation and application.
3. Colors available for each product (where applicable).
4. Compatibility of shop and field applied coatings (where applicable).
5. Material safety data sheet for each product used.
6. Two sets of color samples to match each color selected by the Engineer from the manufacturer's standard color sheets. If custom mixed colors are required by this Section, the color samples shall be made using color formulations prepared to match the color samples furnished by the Engineer. The color formula shall be shown on the back of each color sample.

E. Manufacturer's Certification: For submerged and severe service coating systems, the Contractor shall require the paint manufacturer to certify to the following:

1. The manufacturer's representative has provided at least 6 hours of on-site instruction in the proper surface preparation, use, mixing, application, and curing of the coating systems.
2. The manufacturer's representative has personally observed the start of surface preparation, mixing, and application of the coating materials.

1.05 QUALITY ASSURANCE

A. General: The Contractor shall give the Engineer a minimum of 3 days advance notice of the start of any field surface preparation work of coating application work, and a minimum of 7 days advance notice of the start of any shop surface preparation work.

B. All such work shall be performed only in the presence of the Engineer, unless the Engineer has granted prior approval to perform such work in its absence.

C. Inspection by the Engineer, or the waiver of inspection of any particular portion of the work, shall not relieve the Contractor of its responsibility to perform the work in accordance with these Specifications.

D. Where protective coatings are to be performed by a subcontractor, said subcontractor must possess a valid state license as required for performance of the painting and coating work called for in this specification and must provide 5 references which show that the painting subcontractor has previous successful experience with the specified or comparable coating systems. Include the name, address, and the telephone number for the owner of each installation for which the painting subcontractor provided the protective coating.

E. Scaffolding shall be erected and moved to locations where requested by the Engineer to facilitate inspection. Additional illumination shall be provided to cover all areas to be inspected.

F. Inspection Devices: The Contractor shall furnish, until final acceptance of such coatings, inspection devices in good working condition for the detection of holidays and measurement of dry-film thicknesses of protective coatings. Dry-film thickness gages shall be made available for the Engineer's use at all times while coating is being done, until final acceptance of such coatings. The Contractor shall provide the services of a trained operator of the holiday detection devices until the final acceptance of such coatings. Holiday detection devices shall be operated only in the presence of the Engineer.

G. Film Thickness Testing: On ferrous metals, the dry film coating thickness shall be measured in accordance with the SSPC "Paint Application Specification No. 2" using a magnetic-type dry film thickness gage such as Mikrotest model FM, Elcometer model 111/1EZ, or equal. Each coat shall be tested for the correct thickness. No measurements shall be made until at least 8 hours after application of the coating. On non-ferrous metals and other substrates, the coating thicknesses shall be measured at the time of application using a wet film gage.

H. Surface Preparation: Evaluation of blast cleaned surface preparation work will be based upon comparison of the blasted surfaces with the standard samples available from the NACE, using NACE standard TM-01-70.

1.06 MANUFACTURER REPRESENTATIVE

A. The Contractor shall require the protective coating manufacturer to furnish a qualified technical representative to visit the project site for technical support as specified in the paragraph entitled "Manufacturer's Certification", herein, and as may be necessary to resolve field problems attributable or associated with the manufacturer's products furnished under this Contract or the application thereof.

1.07 MAINTENANCE

A. Warranty Inspection: A warranty inspection may be conducted during the eleventh month following completion of all coating and painting work. The Contractor and a representative of the coating material manufacturer shall attend this inspection. All defective work shall be repaired in accordance with these specifications and to the satisfaction of the City. The City may, by written notice to the Contractor, reschedule the warranty inspection, or may cancel the warranty inspection altogether. If a warranty inspection is not held the Contractor is not relieved of its responsibilities under the Contract Documents.

PART 2 PRODUCTS

2.01 GENERAL

A. Definitions: The term "paint", "coatings", or "finishes" as used herein, shall include surface treatments, emulsions, enamels, paints, epoxy resins, and all other protective coatings, excepting galvanizing or anodizing, whether used as a pretreatment, primer, intermediate coat, or finish coat. The term "DFT" means minimum dry film thickness.

B. General: Coating materials shall be sealed in containers that plainly show the designated name, formula or specification number, batch number, color, date of manufacture, manufacturer's directions, and name of manufacturer, all of which shall be plainly legible at the time of use.

C. The Contractor shall use coating materials suitable for the intended use and recommended by their manufacturer for the intended service.

D. Compatibility: In any coating system only compatible materials from a single manufacturer shall be used in the work. Particular attention shall be directed to compatibility of primers and finish coats. If necessary, subject to the approval of the Engineer, a barrier coat shall be applied between existing prime coat and subsequent field coats to ensure compatibility.

E. Colors: All colors and shades of colors of all coats of paint shall be as selected or specified by the Engineer. Each coat shall be of a slightly different shade, to facilitate inspection of surface coverage of each coat. Finish colors shall be as selected from the manufacturer's standard color samples by the Engineer.

F. Protective Coating Materials: Products shall be standard products produced by recognized manufacturers who are regularly engaged in production of such materials for essentially identical service conditions. Where requested, the Contractor shall provide the Engineer with the names of not less than 10 successful applications of the proposed manufacturer's products demonstrating compliance with this specification requirement.

G. Substitute or "Or-Equal" Submittals: Unless otherwise specified, materials are from the catalogs of the companies listed herein. Materials by other manufacturers are acceptable provided that they are established as being compatible with and of equal quality to the coatings of the companies listed. The Contractor shall provide satisfactory documentation from the firm manufacturing the proposed substitute or "or-equal" material that said material meets the specified requirements and is equivalent or better than the listed materials in the following properties:

1. Quality.
2. Durability.
3. Resistance to abrasion and physical damage.
4. Life expectancy.
5. Ability to recoat in future.
6. Solids content by volume.
7. Dry film thickness per coat.
8. Compatibility with other coatings.
9. Suitability for the intended service.

10. Resistance to chemical attack.
11. Temperature limitations in service and during application.
12. Type and quality of recommended undercoats and topcoats.
13. Ease of application.
14. Ease of repairing damaged areas.
15. Stability of colors.

H. The cost of all testing and analyzing of the proposed substitute materials that may be required by the Engineer shall be paid by the Contractor. If the proposed substitution requires changes in the contract work, the Contractor shall bear all such costs involved and the costs of allied trades affected by the substitution.

2.02 INDUSTRIAL COATING SYSTEMS

A. Material Sources: Each of the following manufacturers is capable of supplying many of the industrial coating materials specified herein. Where manufacturers and paint numbers are listed, it is to show the type and quality of coatings that are required. Proposed substitute materials must be shown to satisfy the material descriptions and to equal or exceed the properties of the listed materials as required in the paragraph entitled "Substitute or `Or-Equal' Submittals" herein.

1. Carboline Coatings Company.
2. PPG Paints.
3. Sherwin Williams Company.
4. Tnemec Company.

B. System 1 - Not Used.

C. System 2 - Not Used.

D. System 3 - Aluminum Silicone Resin: Aluminum silicone resin material shall be suitable for a service temperature of up to 1,000 degrees F and shall comply with Federal Specification TT-P-28.

1. Prime coat and finish coat (2 or more, Min DFT = 3 mils), Rust-Oleum 4315, SW Heat Flex Hi Temp 1000, or equal.
2. Total system DFT = 3 mils.

E. System 4 - Aliphatic Polyurethane: Two component aliphatic acrylic or polyester polyurethane coating material shall provide superior color and gloss retention, resistance to splash from acid and alkaline chemicals, resistance to chemical fumes and severe weathering and with a minimum solids content of 58 percent by volume. Primer shall be a rust inhibitive two component epoxy coating with a minimum solids content of 70 percent by volume.
If this coating system is to be used on Galvanized Ferrous Metal; provide surface treatment (or approved equal) for the prime coat as per the Coating Manufacturers product data sheet.

1. Prime coat (Min DFT = 4 mils), Amerlock 400, Carboguard 890, SW Macropoxy 646-100, Tnemec L69 Epoxoline, or equal.

2. Finish coat (one or more, Min DFT = 3 mils), Amershield, Carboline 133 MC, SW Sherloxane 800, Tnemec 740 EverThane, or equal.

3. Total system Min DFT = 7 mils.

4. More than one finish coat shall be applied as necessary to produce a finish with uniform color and texture.

F. System 5 - Inorganic Zinc/Epoxy/Polyurethane: The inorganic zinc primer shall be a water or solvent based, self-curing, zinc silicate 2-component inorganic coating which contains at least 85 percent of metallic zinc by weight in the dried film and is recommended by the coating manufacturer as a primer for this system. The intermediate coat shall be a high-build two component epoxy with a solids content of at least 70 percent by volume. Finish coats shall be a 2-component aliphatic acrylic or polyester polyurethane coating material that provides superior color and gloss retention, resistance to chemical fumes and severe weathering, and a minimum solids content of 58 percent by volume.

1. Prime coat (Min DFT = 2 mil), Dimetcote 21-5/4A, Carbo Zinc 11 WB, SW Corothane Galvapac 2k 100, Tnemec 94H2O Hydro- Zinc, or equal.

2. Intermediate coat (Min DFT = 4 mils), Amerlock 400, Carboline 890, SW Macropoxy 646-100, Tnemec L69 Epoxoline, or equal.

3. Finish coats (one or more, Min DFT = 3 mils), Amershield, Carboline 133 MC, SW Sherloxane 800, Tnemec 740 EverThane, or equal.

4. Total system DFT = 9 mils.

5. Intermediate coat shall be applied in excess of 4 mils DFT or in more than one coat as necessary to completely cover the inorganic zinc primer and prevent application bubbling of the polyurethane finish coat.

6. More than one finish coat shall be applied as necessary to produce a finish with uniform color and texture.

G. System 6 - Inorganic Zinc, Water Based: Water based, self curing, ethyl silicate shall be a two component inorganic coating material that contains at least 85 percent of metallic zinc by weight in the dried film.

1. Prime coat and finish coat (one, Min DFT = 3 mils), Dimetcote 21- 5/4 A, Carbozinc 11 WB, SW Zinc Clad XI, or equal.

2. Total system DFT = 3 mils.

H. System 7 – Acrylic Enamel: Single component, water based acrylic coating with a fungicide additive shall have a minimum solids content of 35 percent by volume. Prime coat shall be as recommended by manufacturer. The coating material shall be available in the ANSI safety colors.

1. Prime coat (Min DFT = 2 mils), as recommended by manufacturer.

2. Finish coats (2 or more, Min DFT = 6 mils), Amercoat 2104, Carboline 3359 MC, SW Pro Industrial Acrylic, Tnemec 1028 Enduratone, or equal.

3. Total system DFT = 8 mils.

I. System 8 - Not Used.

J. System 9 - Not Used.

K. System 10 – Acrylic Enamel, Concrete: High molecular weight acrylic coating material shall have a minimum solids content of 35 percent by volume. Prime coat shall be an acrylic filler and sealer for concrete surfaces.

1. Prime coat (Filler/sealer) (Min DFT = 12 mils), Tnemec 180 Tneme-Crete, Sanitile 100, SW Heavy Duty Block Filler, or equal.

2. Finish coats (2 or more, Min DFT = 4 mils), Tnemec 180 Tneme- Crete, Carbocrylic 3359 MC, SW Pro Industrial Acrylic (DFT = 6 mils) or equal.

L. System 11 - Aliphatic Polyurethane, Concrete: Two component aliphatic polyester polyurethane coating material shall provide superior color and gloss retention, resistance to splash from acid and alkaline chemicals, and resistance to chemical fumes and severe weathering, and with a minimum solids content of 58 percent by volume. Filler-sealer compound shall be a two-component epoxy material used to provide a smooth surface for the epoxy intermediate coat. The filler-surfacer is applied to the entire concrete surface and worked into the concrete surface with a wide blade putty knife or squeegee. The intermediate coat shall be a high-build polyamide epoxy coating with a minimum solids content of 70 percent by volume.

1. Prime coat (Filler-sealer), NU-Klad 114A, Carboguard 501, SW Steel Seam FT 910, Tnemec 215 Surfacing Epoxy, or equal.

2. Intermediate coat (Min DFT = 4 mils), Amerlock 400, Carboguard 60, Macropoxy 646-100, Tnemec L69 Epoxoline, or equal.

3. Finish coats (1 or more, Min DFT = 3 mils), Amershiel, Carbothane 133 MC, SW Sherloxane 800, Tnemec 740 Everthane, or equal.

M. System 12 - Aliphatic Polyurethane, Fiberglass: Two-component aliphatic polyurethane coating material shall provide superior color and gloss retention, resistance to splash from acid and alkaline chemicals, and resistance to chemical fumes and severe weathering. A primer, tie coat, or mist coat shall be used as recommended by the manufacturer.

1. Prime coat (Tie coat) (Min DFT= 2 mils), Sanitile 120, SW Macropoxy 646-100, Tnemec P69 Epoxoline, or equal.

2. Finish coats (1 or more, Min DFT = 3 mils), Amershield , Carbothane 133 MC, SW Sherloxane 800, Tnemec 740 Everthane, or equal.

N. Max VOC levels per SCQAMD noted in Section 2.5.

2.03 SPECIAL COATING SYSTEMS

A. System 200 - PVC Tape: Prior to wrapping the pipe with PVC tape, the pipe and fittings first shall be primed using a primer recommended by the PVC tape manufacturer. After being primed, the pipe shall be wrapped with a 20-mil adhesive PVC tape, half-lapped, to a total thickness of 40 mils.

B. System 201 - Rich Portland Cement Mortar: Rich portland cement mortar coating shall have a minimum thickness of 1/8-inch, followed by enclosure in an 8-mil thick polyethylene sheet with all joints and edges lapped and sealed with tape.

C. System 203 - Epoxy Surfacing: Two-component epoxy floor surfacing mortar shall be formulated to resist many acids, alkalies, and solvents. Novolac finish material shall be resistant to liquid alum, sodium hydroxide, and 50 percent sulphuric acid. Finish coats shall

be a minimum 20 mils dry film thickness over mortar surfacing. Products shall be as follows, or equal:

1. Ameron Alternative: Prime coat Amerlock Sealer; finish coat Nu-Klad 110A, (1/4-inch thick).
2. Tnemec Alternative: Prime coat Tnemec 237 Power-Tread; finish Tnemec 282 Tneme-Glaze (1/4-inch thick).

D. System 204 - Waterproofing: Two coats of a clear, non-staining, silane-modified-siloxane masonry waterproofing material. The waterproofing system 204 after application shall be provided with not less than a five-year warranty on the performance of the product.

1. Where EPA Allows Solvents: Chemstop, "WB Heavy Duty; Rainguard, "XS", Chemprobe / Prime a Pell H2O; or equal.
2. Where EPA Prohibits Solvents: Chemstop, "WB Regular / Heavy Duty"; Rainguard's "Blok-Lok"; Rainproof's "Chem-Trete #45", Chemprobe / Prime A Pell H2O; or equal.

Surfaces shall be cleaned with a chemical (approved by waterproofing manufacturer) cleaner and power wash. Surfaces shall be clean and dry before application of waterproofing. Method and rate of application shall be in accordance with manufacturer's published instructions. A manufacturer's representative shall be present during applications if necessary for warranty.

E. System 205 - Polyethylene Encasement: Application of polyethylene encasement shall be in accordance with ANSI/AWWA C105 using Method C.

F. System 206 - Cement Mortar Coating: A 1-1/2-inch minimum thickness mortar coating reinforced with 3/4-inch galvanized welded wire fabric shall be provided. The cement mortar shall contain no less than one part Type V cement to 3 parts sand. The cement mortar shall be cured by a curing compound meeting the requirements of "Liquid Membrane-Forming Compounds for Curing Concrete" ASTM C 309-81, Type II, white pigmented, or by enclosure in an 8-mil thick polyethylene sheet with all joints and edges lapped by at least 6-inches.

G. System 207 - Non-Slip Surfacing: Coating shall have one coat of Semstone 140 W/ aluminum oxide additive, AS 150 as manufactured by Amstep Products or one coat of Ameron Nu-Klad 100A with Amercoat 886 additive, or one coat SW Fastop TC with AO, or one coat Tnemec 280 Tneme-Glaze with Series 211 additive or equal. The coating shall be gray in color. Application shall be by means of a roller and not more than 60 sq ft per gallon of non-slip coating shall be applied. Primer shall be as recommended by the coating manufacturer.

H. System 208 - Aluminum Metal Isolation: A wash primer (0.5 mils) shall be applied, followed by one coat of heavy bodied bituminous paint, such as SW Macropoxy 646-100, Tnemec L69 Epoxoline, or equal (8 mils). Total thickness of system (8.5 mils).

I. Max VOC levels per SCQAMD noted in Section 2.5.

2.04 MAXIMUM VOLATILE ORGANIC COMPOUND LIMITS (SCQAMD - 2016)

TABLE OF STANDARDS 1
VOC LIMITS

Grams of VOC Per Liter of Coating,
Less Water and Less Exempt Compounds

COATING CATEGORY	Category Codes	Current Limit[1]	Effective Date			Small Container Exemption
			1/1/14	2/5/16	1/1/19	
Bond Breakers	5	350				✓
Building Envelope Coating	62	100			50	✓
Concrete-Curing Compounds	7	100				✓
Concrete-Curing Compounds For Roadways and Bridges[2]	7	350				✓[3]
Concrete Surface Retarder	58	50	50			✓
Default	51	50	50			✓
Driveway Sealer	52	50				✓
Dry-Fog Coatings	8	50	50			✓
Faux Finishing Coatings						
Clear Topcoat	9a	100	100			✓
Decorative Coatings	9	350				✓
Glazes	9b	350				✓
Japan	9c	350				✓
Trowel Applied Coatings	9d	50	50			✓
Fire-Proofing Coatings	10	150	150			✓
Flats	13	50				✓[5]
Floor Coatings	14	50				✓
Form Release Compound	16	100	100			✓
Graphic Arts (Sign) Coatings	17	200	150	200		✓
Industrial Maintenance (IM) Coatings	19	100				✓[5]
Color Indicating Safety Coatings		480				✓[5]
High Temperature IM Coatings	18	420				✓[5]
Non-Sacrificial Anti-Graffiti Coatings	19a	100				✓[5]
Zinc-Rich IM Primers	56	100				✓[5]
Magnesite Cement Coatings	22	450				✓[3]
Mastic Coatings	23	100	100			✓
Metallic Pigmented Coatings	24	150	150			✓
Multi-Color Coatings	25	250				✓[3]
Nonflat Coatings	26, 27, 28	50				✓[5]
Pre-Treatment Wash Primers	29	420				✓[3]
Primers, Sealers, and Undercoaters	30	100				✓
Reactive Penetrating Sealers	59	350				✓[4]
Recycled Coatings	33	250			150	✓
Roof Coatings	34	50				✓
Roof Coatings, Aluminum	53	100				✓
Roof Primers, Bituminous	4	350				✓[3]
Rust Preventative Coatings	35	100				✓[6]
Sacrificial Anti-Graffiti Coatings	60	50				✓[3]
Shellac						
Clear	37	730				✓[4]
Pigmented	38	550				✓[4]
Specialty Primers	39	100				✓
Stains	41	100				✓

COATING CATEGORY	Category Codes	Current Limit[1]	Effective Date			Small Container Exemption
			1/1/14	2/5/16	1/1/19	
Stains, Interior	40	250				✓
Stone Consolidants	61	450				✓[3]
Swimming Pool Coatings						
Repair	43	340				✓[3]
Other	42	340				✓[3]
Tile and Stone Sealers	63	100				✓
Traffic Coatings	45	100				✓
Tub and Tile Refinishing Coatings	64	420				✓[4]
Waterproofing Sealers	48	100				✓
Waterproofing Concrete/Masonry Sealers	49	100				✓
Wood Coatings		275				
Varnish	46, 47	275				
Sanding Sealers	36	275				
Lacquer	20	275				
Wood Conditioners	65	100				
Wood Preservatives						
Below-Ground	50	350				✓[3]
Other	55	350				✓[3]

1. The specified limits remain in effect unless revised limits are listed in subsequent columns in the Table of Standards.
2. Does not include compounds used for curbs and gutters, sidewalks, islands, driveways and other miscellaneous concrete areas.
3. Effective 02/05/2016, the small container exemption no longer applies per (f)(1).
4. Effective 01/01/2018, the small container exemption no longer applies per (f)(1).
5. Effective 01/01/2019, the small container exemption is further restricted per (f)(1).
6. Effective 01/01/2020, the small container exemption is further restricted per (f)(1).

TABLE OF STANDARDS 1 (cont.)
VOC LIMITS

Grams of VOC Per Liter of Material

COATING	Limit
Low-Solids Coating	120

TABLE OF STANDARDS 2
VOC LIMITS FOR COLORANTS

Grams of VOC Per Liter of Colorant
Less Water and Less Exempt Compounds

COLORANT ADDED TO	Limit
Architectural Coatings, excluding IM Coatings	50
Solvent-Based IM	600
Waterborne IM	50

PART 3 EXECUTION

3.01 STORAGE, MIXING, AND THINNING OF MATERIALS

A. Manufacturer's Recommendations: Unless otherwise specified herein, the coating manufacturer's printed recommendations and instructions for thinning, mixing, handling, applying, and protecting its coating materials, for preparation of surfaces for coating, and for all other procedures relative to coating shall be strictly observed. The Contractor shall supply the Engineer with copies of each manufacturer's instructions in accordance with the GENERAL REQUIREMENTS.

B. All protective coating materials shall be used within the manufacturer's recommended shelf life.

C. Storage and Mixing: Coating materials shall be protected from exposure to cold weather, and shall be thoroughly stirred, strained, and kept at a uniform consistency during application. Coatings of different manufacturers shall not be mixed together.

3.02 PREPARATION FOR COATING

A. General: All surfaces to receive protective coatings shall be cleaned as specified herein prior to application of said coatings. The Contractor shall examine all surfaces to be coated and shall correct all surface defects before application of any coating material. All marred or abraded spots on shop-primed and on factory-finished surfaces shall receive touch-up restoration prior to any coating application.

B. Protection of Surfaces Not to be Coated: Surfaces which are not to receive protective coatings shall be protected during surface preparation, cleaning, and coating operations.

C. All hardware, lighting fixtures, switch plates, machined surfaces, couplings, shafts, bearings, nameplates on machinery, and other surfaces not to be painted shall be removed, masked or otherwise protected. Drop cloths shall be provided to prevent coating materials from falling on or marring adjacent surfaces. The working parts of all mechanical and electrical equipment shall be protected from damage during surface preparation and coating operations. Openings in motors shall be masked to prevent entry of coating or other materials.

D. Care shall be exercised not to damage adjacent work during blast cleaning operations. Spray painting shall be conducted under carefully controlled conditions. The Contractor shall be fully responsible for and shall promptly repair any and all damage to adjacent work or adjoining property occurring from blast cleaning or coating operations.

E. Protection of Painted Surfaces: Cleaning and coating shall be so programmed that dust and other contaminants from the cleaning process will not fall on wet, newly coated surfaces.

3.03 SURFACE PREPARATION STANDARDS

A. The following referenced surface preparation specifications of the Steel Structures Painting Council shall form a part of this specification:

1. Solvent Cleaning (SSPC-SP1): Removal of oil, grease, dirt, soil, salts, and contaminants by cleaning with solvent, vapor, alkali, emulsion, or steam.

2. Hand Tool Cleaning (SSPC-SP2): Removal of loose rust, loose mill scale, and loose paint to degree specified, by hand chipping, scraping, sanding, and wire brushing.

3. Power Tool Cleaning (SSPC-SP3): Removal of loose rust, loose mill scale, and loose paint to degree specified by power tool chipping, descaling, sanding, wire brushing, and grinding.

4. White Metal Blast Cleaning (SSPC-SP5/NACE1): Removal of all visible rust, mill scale, paint, and foreign matter by blast cleaning by wheel or nozzle (dry or wet) using sand, grit, or shot.

5. Commercial Blast Cleaning (SSPC-SP6/NACE3): Blast cleaning until at least two-thirds of each element of surface area is free of all visible residues.

6. Brush-Off Blast Cleaning (SSPC-SP7/NACE4): Blast cleaning of all except tightly adhering residues of mill scale, rust, and coatings, exposing numerous evenly distributed flecks of underlying metal.

B. The other surface preparation standards shall be the most recent versions published by the SSPC and NACE.

3.04 METAL SURFACE PREPARATION (UNGALVANIZED)

A. The minimum abrasive blasting surface preparation shall be as specified in the coating system schedules included at the end of this Section. Where there is a conflict between these specifications and the coating manufacturer's printed recommendations for the intended service, the higher degree of cleaning shall apply.

B. Workmanship for metal surface preparation shall be in conformance with the current SSPC Standards and this Section. Blast cleaned surfaces shall match the standard samples available from the National Association of Corrosion Engineers, NACE Standard TM-01-70.

C. All oil, grease, welding fluxes and other surface contaminants shall be removed by solvent cleaning per SSPC-SP1 prior to blast cleaning.

D. All sharp edges shall be rounded or chamfered and all burrs, and surface defects and weld splatter shall be ground smooth prior to blast cleaning.

E. The type and size of abrasive shall be selected to produce a surface profile that meets the coating manufacturer's recommendation for the particular coating and service conditions.

F. The abrasive shall not be reused unless otherwise approved by the Engineer. For automated shop blasting systems, clean oil-free abrasives shall be maintained.

G. The Contractor shall comply with the applicable federal, state, and local air pollution control regulations for blast cleaning.

H. Compressed air for air blast cleaning shall be supplied at adequate pressure from well maintained compressors equipped with oil/moisture separators which remove at least 95 percent of the contaminants.

I. Surfaces shall be cleaned of all dust and residual particles of the cleaning operation by dry air blast cleaning, vacuuming or another approved method prior to painting.

J. Enclosed areas and other areas where dust settling is a problem shall be vacuum cleaned and wiped with a tack cloth.

K. Damaged or defective coating shall be removed by the specified blast cleaning to meet the clean surface requirements before recoating.

L. If the specified abrasive blast cleaning will damage adjacent work, the area to be cleaned is less than 100 square feet, and the coated surface will not be submerged in service, then SSPC-SP2, hand tool cleaning or SSPC-SP3, power tool cleaning, may be used.

M. Shop applied coatings of unknown composition shall be completely removed before the specified coatings are applied. Valves, castings, ductile or cast-iron pipe, and fabricated pipe or equipment shall be examined for the presence of shop-applied temporary coatings. Temporary coatings shall be completely removed by solvent cleaning per SSPC-SP1 before the abrasive blast cleaning work has been started.

N. Shop primed equipment shall be solvent cleaned in the field before finish coats are applied.

O. Ferrous metal surfaces in severe or immersion service shall conform to the following.

1. Solvent Cleaning (SSPC-SP1) shall be performed over all surfaces prior to abrasive blast cleaning. : Removal of oil, grease, dirt, soil, salts, and contaminants by cleaning with solvent, vapor, alkali, emulsion, or steam as required.
2. **All ferrous metal and nonferrous metal surfaces to be cleaned in accordance with SSPC-SP5/NACE 1. White Metal Blast Clean with a 3.0 mil minimum anchor profile.**
3. Where the coating is specified to be terminated, the Contractor shall prepare and apply materials as outlined in coating manufacturer recommendations.
4. Where the coating is specified to be terminated at a metal embedment, the Contractor shall prepare and apply materials as outlined or as recommended by the manufacturer.
5. The Contractor shall notify the Engineer should jobsite conditions prevent the above operations and/or applications.

3.05 SURFACE PREPARATION FOR GALVANIZED FERROUS METAL

A. Galvanized ferrous metal shall be alkaline cleaned per SSPC-SP1 to remove oil, grease, and other contaminants detrimental to adhesion of the protective coating system to be used.

B. Abrasive brush blasting or uniform scarification of cleaned surfaces is required. Perform surface preparation according to SSPC-SP16, Brush of Blast Cleaning of Coated and Uncoated Galvanized steel, Stainless Steel, and Non-Ferrous Metals.

C. Abrasive brush blasting is required for all non-ferrous metals in severe or immersion service.

D. Pretreatment coatings, white rust staining, passivation treatments such as chromating shall be completely removed. Perform successful test to confirm removal of passivating treatments according to SSPC-Sp16 prior to the application of any coatings.

3.06 SURFACE PREPARATION OF FERROUS SURFACES WITH EXISTING COATINGS

A. General: All grease, oil, heavy chalk, dirt, or other contaminants shall be removed by solvent or detergent cleaning prior to abrasive blast cleaning. The generic type of the existing coatings shall be determined by laboratory testing.

B. Abrasive Blast Cleaning: The Contractor shall provide the degree of cleaning specified in the coating system schedule for the entire surface to be coated. If the degree of cleaning is not specified in the schedule, deteriorated coatings shall be removed by abrasive blast cleaning to SSPC-SP6, Commercial Blast Cleaning. Areas of tightly adhering coatings shall be cleaned to SSPC-SP7, Brush-off Blast Cleaning, with the remaining thickness of existing coating not to exceed 3 mils.

C. Incompatible Coatings: If coatings to be applied are not compatible with existing coatings the Contractor shall apply intermediate coatings per the paint manufacturer's recommendation for the specified coating system or shall completely remove the existing coating prior to abrasive blast cleaning. A small trial application shall be conducted for compatibility prior to painting large areas.

D. Unknown Coatings: Coatings of unknown composition shall be completely removed prior to application of new coatings.

E. Water Abrasive or Wet Abrasive Blast Cleaning: Where specified or where job site conditions do not permit dry abrasive blasting for industrial coating systems due to dust or air pollution considerations, water abrasive blasting or wet abrasive blasting may be used. In both methods, paint-compatible corrosion inhibitors shall be used, and coating application shall begin as soon as the surfaces are dry. Water abrasive blasting shall be done using high pressure water with sand injection. In both methods, the equipment used shall be commercially produced equipment with a successful service record. Wet blasting methods shall not be used for submerged and severe service coating systems unless specified.

3.07 CONCRETE AND CONCRETE BLOCK MASONRY SURFACE PREPARATION

A. Surface preparation shall not begin until at least 30 days after the concrete or masonry has been placed.

B. All oil, grease, and form release and curing compounds shall be removed by detergent cleaning per SSPC-SP1 before abrasive blast cleaning.

C. Concrete, concrete block masonry surfaces and deteriorated concrete surfaces to be coated shall be abrasive blast cleaned to remove existing coatings, laitance, deteriorated concrete, and to roughen the surface equivalent to the surface of the No. 80 grit flint sandpaper.

D. If acid etching is required by the coating application instructions the treatment shall be made after abrasive blasting. After etching, rinse surfaces with water and test the pH. The pH shall be between neutral and 8.

E. Surfaces shall be clean and as recommended by the coating manufacturer before coating is started.

F. Unless required for proper adhesion, surfaces shall be dry prior to coating. The presence of moisture shall be determined with a moisture detection device such as Delmhorst Model DB, or equal.

G. Concrete, Concrete Masonry Unit surfaces in sever or immersion service shall conform to the following.

1. Remove all release agents, curing compounds, efflorescence, chalk, grease, and foreign material from the surface. Surfaces shall be decontaminated to remove all microorganisms, acid constituents, grease, oil, and other contaminants prior to commencement of surface preparation (Reference ASTM D4258, SSPC-SP13/NACE No. 6).

2. Verify that the pH of the cleaned and prepared concrete surfaces to be coated is within the range of to 9 to 11. Application of coating materials outside this range will not be permitted without written approval from the Engineer. ASTM D 4262 should be used to determine pH.

3. Allow new concrete to cure for a minimum of 28 days or shall be prepared and treated according to the coating manufacturer's recommendations.

4. **Test concrete for moisture following the 28-day curing period in accordance with ASTM D4263 and/or F1869. Test results shall be reviewed by the coating manufacturer's technical representative to determine if any special treatments are required prior to the application of coating.**

5. **Concrete surfaces shall be prepared in accordance with SSPC-SP13/NACE No. 6, Severe Service, and shall produce a minimum surface profile of a CSP-5 as noted in ICRI Technical Guideline No. 310.2 and ASTM D4259, SSPC-SP13/NACE No. 6.**

6. Fill all bug holes, honeycombs, cracks, and surface imperfections with surface fillers to the specified thickness in a uniform and consistent fashion.

7. Where the coating is specified to be terminated, the contractor shall prepare and apply materials as outlined by the coating manufacturer. Detailed drawings shall be provided for review with contractor submittals.

8. Repair of spalling, corroded concrete, exposed rebar shall be performed according to the specified process and manufacturer's recommendation.

3.08 PLASTIC, FIBERGLASS AND NONFERROUS METALS SURFACE PREPARATION

A. Plastic and fiberglass surfaces shall be sanded or brush off blast cleaned prior to solvent cleaning with a chemical compatible with the coating system primer.

B. Non-ferrous metal surfaces shall be solvent-cleaned SSPC-SP1 followed by sanding or brush-off blast cleaning SSPC-SP7/NACE4.

C. All surfaces shall be clean and dry prior to coating application.

3.09 ARCHITECTURAL CONCRETE BLOCK MASONRY SURFACE PREPARATION

A. The mortar surfaces shall be cured at least 14 days before surface preparation work is started.

B. Dust, dirt, grease, and other foreign matter shall be removed prior to abrasive blasting.

C. The masonry surfaces shall be prepared in accordance with the material manufacturer's printed instructions.

3.10 WORKMANSHIP

A. Skilled craftsmen and experienced supervision shall be used on all work.

B. Clean drop cloths shall be used. All damage to surfaces resulting from the work hereunder shall be cleaned, repaired, and refinished to their original condition.

C. All coatings shall be applied under dry and dust-free conditions. Coating shall be done in a workmanlike manner so as to produce an even film of uniform thickness. Edges, corners, crevices, and joints shall receive special attention to ensure that they have been thoroughly cleaned and that they receive an adequate thickness of coating material. The finished surfaces shall be free from runs, drops, ridges, waves, laps, brush marks, and variations in color, texture, and finish. The hiding shall be so complete that the addition of another coat would not increase the hiding. Special attention shall be given to ensure that edges, corners, crevices, welds, and similar areas receive a film thickness equivalent to adjacent areas, and installations shall be protected by the use of drop cloths or other approved precautionary measures.

3.11 SHOP COATING REQUIREMENTS

A. All items of equipment, or parts of equipment which are not submerged in service, shall be shop primed and then finish coated in the field after installation with the specified or approved color. The methods, materials, application equipment and all other details of shop painting shall comply with this section. If the shop primer requires topcoating within a specified period of time, the equipment shall be finish coated in the shop and then touch-up painted after installation.

B. All items of equipment, or parts and surfaces of equipment which are submerged or inside an enclosed hydraulic structure when in service, with the exception of pumps and valves, shall have all surface preparation and coating work performed in the field.

C. The interior surfaces of steel reservoirs shall have all surface preparation and coating work performed in the field.

D. For certain pieces of equipment, it may be undesirable or impractical to apply finish coatings in the field. Such equipment may include engine generator sets, equipment such as electrical control panels, switchgear or main control boards, submerged parts of pumps, ferrous metal passages in valves, or other items where it is not possible to obtain the specified quality in the field. Such equipment shall be shop primed and finish coated and touched up in the field with the identical material after installation. The Contractor shall require the manufacturer of each such piece of equipment to certify as part of its shop drawings that the surface preparation is in accordance with these specifications. The coating material data sheet shall be submitted with the shop drawings for the equipment.

E. For certain small pieces of equipment, the manufacturer may have a standard coating system which is suitable for the intended service conditions. In such cases, the final determination of suitability will be made during review of the shop drawing submittals. Equipment of this type generally includes only indoor equipment such as instruments, small compressors, and chemical metering pumps.

F. Shop painted surfaces shall be protected during shipment and handling by suitable provisions including padding, blocking, and the use of canvas or nylon slings. Primed surfaces shall not be exposed to the weather for more than 6 months before topcoated, or less time if recommended by the coating manufacturer.

G. Damage to shop-applied coatings shall be repaired in accordance with this Section and the coating manufacturers printed instructions.

H. The Contractor shall make certain that the shop primers and field topcoats are compatible and meet the requirements of this Section. Copies of applicable coating manufacturer's data sheets shall be submitted with equipment shop drawings.

3.12 APPLICATION OF COATINGS

A. The application of protective coatings to steel substrates shall be in accordance with "Paint Specification No. 1, (SSPC-A-1)", Steel Structures Painting Council.

B. Cleaned surfaces and all coats shall be inspected prior to each succeeding coat. The Contractor shall schedule such inspection with the Engineer in advance.

C. Blast cleaned ferrous metal surfaces shall be painted before any rusting or other deterioration of the surface occurs. Blast cleaning shall be limited to only those surfaces that can be coated in the same working day.

D. Coatings shall be applied in accordance with the manufacturer's instructions and recommendations, and this Section, whichever has the most stringent requirements.

E. Special attention shall be given to edges, angles, weld seams, flanges, nuts and bolts, and other places where insufficient film thicknesses are likely to be present. Use stripe painting for these areas.

F. Special attention shall be given to materials which will be joined so closely that proper surface preparation and application are not possible. Such contact surfaces shall be coated prior to assembly or installation.

G. Finish coats, including touch-up and damage repair coats shall be applied in a manner which will present a uniform texture and color matched appearance.

H. Coatings shall not be applied under the following conditions:

1. Temperature exceeding the manufacturer's recommended maximum and minimum allowable.
2. Dust or smoke laden atmosphere.
3. Damp or humid weather.
4. When the substrate or air temperature is less than 5 degrees F above dewpoint.
5. When air temperature is expected to drop below 40 degrees F or less than 5 degrees F above the dewpoint within 8 hours after application of coating.

I. Dewpoint shall be determined by use of a sling psychrometer in conjunction with U.S. Dept. of Commerce, Weather Bureau psychrometric tables.

J. Steel piping shall be abrasive blast cleaned and primed before installation.

K. The finish coat on all work shall be applied after all concrete, masonry, and equipment installation is complete and the work areas are clean and dust free.

3.13 CURING OF COATINGS

A. The Contractor shall provide curing conditions in accordance with the conditions recommended by the coating material manufacturer or by this Section, whichever is the highest requirement, prior to placing the completed coating system into service.

B. In the case of enclosed areas, forced air ventilation, using heated air if necessary, may be required until the coatings have fully cured.

C. Forced Air Ventilation of Steel Reservoirs and Enclosed Hydraulic Structures: Forced air ventilation is required for the application and curing of coatings on the interior surfaces of steel reservoirs and enclosed hydraulic structures. During curing periods continuously exhaust air from a maintenance hole in the lowest shell ring, or in the case of an enclosed hydraulic structure, from the lowest level of the structure using portable ducting. After all interior coating operations have been completed, provide a final curing period for a minimum of 10 days, during which the forced ventilation system shall operate continuously. For additional requirements, refer to the specific coating system being used in the paragraph entitled "Submerged and Severe Service Coating Systems" herein.

3.14 IDENTIFICATION OF PIPING

A. Identification of piping shall be in accordance with Section 15780 " Piping Identification Systems."

B. Every valve or connection, where it may be possible for a worker to be exposed to a hazardous substance, shall be labeled per OSHA Occupational Safety and Health Standards 29CFR1910.

C. All unburied pipe in structures and in chemical pipe trenches shall be color-code painted. Colors shall be as specified in Section 15780 "Piping Identification Systems," as selected by the Engineer, or as shown.

3.15 COATING SYSTEM SCHEDULES - FERROUS METALS

A. Coating System Schedule, Ferrous Metal - Not Galvanized:

	Item	Surface Prep.	System No.
FM-1	All exposed surfaces indoors and outdoors, except those included below.	Commercial blast cleaning SSPC-SP6/NACE3	(7) acrylic enamel
FM-1	All exposed surfaces indoors and outdoors, except those included below.	Commercial blast cleaning SSPC-SP6/NACE3	(4) aliphatic polyurethane
FM-1	All exposed surfaces indoors and outdoors, except those included below.	White metal blast cleaning SSPC-SP5/NACE1	(5) zinc-rich / polyurethane
FM-2	Surfaces in chlorination room, chlorine storage room.	Commercial blast cleaning SSPC-SP6/NACE3	(101) epoxy
FM-3	Surfaces of equipment and ferrous surfaces submerged	White metal blast cleaning SSPC-SP5/NACE1	(100) amine cured epoxy

	Item	Surface Prep.	System No.
	or intermittently submerged in potable water or utility water, including all surfaces lower than 2-feet above high-water level and all surfaces inside enclosed hydraulic structures and vents (excluding shop-coated valves, couplings, pumps).		
FM-4	Surfaces of equipment and ferrous surfaces submerged or intermittently submerged in wastewater, including all surfaces lower than 2-feet above high-water level and all surfaces inside enclosed hydraulic structures (excluding shop-coated valves, couplings, pumps).	White metal blast cleaning SSPC-SP5/NACE1	(109) epoxy amine
FM-5	Surfaces exposed to high temperature (between 150- and 600-degrees F).	White metal blast cleaning SSPC-SP10/NACE1	(6) inorganic zinc, water-based
FM-6	Surfaces exposed to high temperature (between 600- and 1,000-degrees F).	White metal blast cleaning SSPC-SP5/NACE1	(3) aluminum silicone resin
FM-7	Buried small steel pipe.	Removal of dirt, grease, oil	(200) PVC tape
FM-8	Buried pipe couplings, valves, and flanged joints (where piping is plastic).	Removal of dirt, grease, oil	(201) rich portland cement mortar
FM-9	Buried pipe couplings, valves, and flanged joints (where piping is not plastic, or tape-coated, or mortar-coated steel), including epoxy-coated surfaces.	As specified by reference specification	(205) polyethylene encasement
FM-10	Buried pipe couplings, valves, and flanged joints (where piping is mortar-coated steel or reinforced concrete), including epoxy-coated surfaces.	Removal of dirt, grease, oil	(206) cement-mortar coating

	Item	Surface Prep.	System No.
FM-11	Ferrous surfaces in water passages of all valves 4-inch size and larger, exterior surfaces of submerged valves.	White metal blast cleaning SSPC-SP5/NACE1	(100) amine-cured epoxy
FM-12	Where shown or specified, ferrous surfaces in water passages and submerged surfaces of all pumps which have discharge size of 4-inches or larger.	White metal blast cleaning SSPC-SP5/NACE1	(100) amine-cured epoxy
FM-12	Where shown or specified, ferrous surfaces in water passages and submerged surfaces of all pumps which have discharge size of 4-inches or larger.	White metal blast cleaning SSPC-SP5/NACE1	(106) fusion-bonded epoxy
FM-13	Ferrous surfaces of sleeve-couplings	White metal blast cleaning SSPC-SP5/NACE1	(100) amine-cured epoxy
FM-14	All ferrous surfaces of sluice gates, flap gates, and shear gates, including wall thimbles.	White metal blast cleaning SSPC-SP5/NACE1	(106) fusion-bonded epoxy
FM-15	Buried surfaces that are not specified to be coated	White metal blast cleaning SSPC-SP5/NACE1	(103) coal tar epoxy
FM-16	Indoor sheet metal, flashings, exposed ducts.	Commercial blast cleaning SSPC-SP6/NACE3	(7) acrylic enamel
FM-17	Interior surfaces of all chemical tanks, except caustic soda tanks, including tank nozzles, manholes, nozzle necks, flange faces.	White metal blast cleaning SSPC-SP5/NACE1	(107) chemical-resistant sheet lining

B. Coating System Schedule, Ferrous Metal - Galvanized: Pretreatment coatings, barrier coatings, or washes shall be applied as recommended by the coating manufacturer. All galvanized surfaces shall be coated. All galvanized surfaces except for the following items shall be coated unless coating is required by other Sections: (1) Floor gratings and frames, (2) Handrails, (3) Stair treads, (4) Chain link fencing and appurtenances, (5) Specifier selected items.

	Item	Surface Prep.	System No.
FMG-1	All exposed surfaces indoors and outdoors, except those included below.	Galvanized Metal	(3) acrylic enamel
FMG-1	All exposed surfaces indoors and outdoors, except those below.	Galvanized Metal	(4) aliphatic polyurethane
FMG-2	Surfaces in chlorinator room, chlorine storage room.	Galvanized Metal	(101) amine-cured epoxy
FMG-3	Buried small steel pipe.	Galvanized Metal	(200) PVC tape
FMG-4	Surfaces buried or submerged in wastewater.	Galvanized Metal	(109) epoxy-amine
FMG-5	Buried miscellaneous surfaces, couplings, valves, and flanged joints.	Galvanized Metal	(201) rich portland cement mortar
FMG-6	Indoor sheet metal flashings, exposed ducts.	Galvanized Metal	(3) acrylic enamel

C. Coating System Schedule, Steel Reservoir Interior: For steel reservoir exterior coating system, see "Coating System Schedule, Ferrous Metal-Not Galvanized". The interior surfaces of steel reservoirs shall have all surface preparation and coating work performed in the field.

	Item	Surface Prep.	System No.
SR-1	All interior surfaces beginning one foot above high-water level, including all plates, roof structural members, fittings, and vents.	White metal blast cleaning SSPC-SP5/NACE1	(105) Part A, inorganic zinc/epoxy
SR-2	Underside of column bases, floor under column bases before columns set in place, submerged contact surfaces that are not accessible after erection.	White metal blast cleaning SSPC-SP5/NACE1	(105) Part B, inorganic zinc/epoxy
SR-3	Interior surfaces exclusive of surfaces in SR-1 and SR-2 above, including overflow, drain and other piping out to the first valve or coupling.	White metal blast cleaning SSPC-SP5/NACE1	(105) Part B, inorganic zinc/ epoxy

A. Coating System Schedule, Steel Digester Floating Covers and Digester Gasholders:

	Item	Surface Prep.	System No.
SD-1	All ferrous surfaces submerged in water or sludge, including rim plate.	White metal blast cleaning SSPC-SP5/NACE1	(109) epoxy amine
SD-2	All ferrous surfaces exposed to digester gas.	White metal blast cleaning SSPC-SP5/NACE1	(109) epoxy amine
SD-3	All interior ferrous surfaces of gasholder shell, including top angle.	White metal blast cleaning SSPC-SP5/NACE1	(109) epoxy amine
SD-4	All ungalvanized interior surfaces inside digester roof, between and including the ceiling plate and the roof deck.	White metal blast cleaning SSPC-SP5/NACE1	(109) epoxy amine
SD-5	Exposed, outdoors.	Commercial blast cleaning SSPC-SP6/NACE3	(5) Zinc rich, aliphatic polyurethane

3.16 COATING SYSTEM SCHEDULE, NON-FERROUS METAL, PLASTIC, FIBERGLASS

A. Where isolated non-ferrous parts are associated with equipment or piping, the Contractor shall use the coating system for the adjacent connected surfaces. Do not coat handrails, gratings, frames or hatches. Only primers recommended by the coating manufacturer shall be used.

	Item	Surface Prep.	System No.
NFM-1	All exposed surfaces, indoors and outdoors, except those included below.	Solvent cleaned SSPC-P1	(3) acrylic enamel
NFM-1	All exposed surfaces, indoors and outdoors, except those included below.	Solvent cleaned SSPC-P1	(4) aliphatic polyurethane
NFM-2	Chlorination room, chlorine storage room.	Solvent cleaned SSPC-SP1	(101) amine-cured epoxy
NFM-3	Aluminum surfaces in contact with concrete, or with any other metal except galvanized ferrous metal.	Solvent cleaned SSPC-SP1	(208) aluminum metal isolation
NFM-4	Polyvinyl chloride plastic piping, indoors and outdoors, or in structures, not submerged.	Solvent cleaned SSPC-SP1	(7) acrylic enamel
NFM-5	Fiber glass surfaces.	Per Paragraph **3.8**	(12) aliphatic polyurethane fiberglass
NFM-6	Buried non-ferrous metal pipe.	Removal of dirt, grease, oil	(200) PVC tape

3.17 COATING SYSTEM SCHEDULE-CONCRETE

	Item	Surface Prep.	System No.
C-1	Exposed indoors and outdoors, as shown.	Per Paragraph 3.7	(10) acrylic, concrete
C-2	Submerged in wastewater including surfaces up to 2-feet above high-water line and down to 2-feet below low water line and all surfaces in an enclosed structure, as shown.	Per Paragraph 3.7	New surface:(110) epoxy amine, concrete Existing surface: (102) epoxy mortar
C-2	Submerged in wastewater including surfaces up to 2-feet above high water line and down to 2-feet below low water line and all surfaces in an enclosed structure, as shown.	Per Paragraph 3.7	(110) epoxy amine, concrete
C-3	Floor slab, exposure to chemicals, as shown.	Per Paragraph 3.7	(203) epoxy surfacing
C-4	Floor slab, non-slip surface, as shown.	Per Paragraph 3.7	(207) non-slip surfacing
C-5	Interior surfaces of sewer manholes, including sidewalls, bottom, and metal appurtenances, for manholes shown.	Per Paragraph 3.7	New surface:(110) epoxy amine, concrete Existing surface: (102) epoxy mortar
C-6	Walls, exposure to chemical splash, washdown, as shown.	Per Paragraph 3.7	(11) aliphatic polyurethane, concrete

END OF SECTION

SECTION 11000
EQUIPMENT GENERAL PROVISIONS

PART 1 - GENERAL

1.1 THE REQUIREMENT

A. The CONTRACTOR shall furnish all tools, supplies, materials, equipment, and all labor necessary for the furnishing, construction, installation, testing, and operation of all equipment and appurtenant work, complete and operable, all in accordance with the requirements of the Contract Documents.

B. The provisions of this Section shall apply, in general, to all equipment specified and where referred to, and they supplement the detailed equipment specifications. The detailed equipment specifications shall govern where this section conflicts with detailed sections.

1.2 RELATED WORK SPECIFIED ELSEWHERE

A. Divisions 2 and 15 Piping, Fittings, and Valves as applicable.

B. Section 05500 - Miscellaneous Metalwork.

C. Section 09800 - Protective Coating.

D. Section 11300 - Pumps, General.

E. Division 17, Instrumentation and Control.

F. Section 15610 - Piping, General.

G. Section 15340 - Hangers and Supports.

H. Section 16490 - Electric Motors.

I. Section 16020 - Municipal Facilities General Electrical Requirements.

J. Section 16340 - Low Voltage Motor Control.

1.3 REFERENCE SPECIFICATIONS, CODES AND STANDARDS

A. Comply with the applicable reference specifications as specified in the GENERAL REQUIREMENTS.

B. Commercial Standards: All equipment, products, and their installation shall be in accordance with the following standards, as applicable, and as specified in each Section of these specifications:

1. American Society for Testing and Materials (ASTM).

2. American Public Health Association (APHA).

3. American National Standards Institute (ANSI).

4. American Society of Mechanical Engineers (ASME).

5. American Water Works Association (AWWA).

6. American Society of Heating, Refrigerating, and Air Conditioning Engineers (ASHRAE).

7. American Welding Society (AWS).

8. National Fire Protection Association (NFPA).

9. Federal Specifications (FS).

10. National Electrical Manufacturers Association (NEMA).

11. Rubber Manufacturers of America (RMA).

12. Manufacturer's published recommendations and specifications.

13. General Industry Safety Orders (CAL-OSHA).

C. The following standards in particular are referred to in this Section of the Specifications:

ANSI B16.1	Cast Iron Pipe Flanges and Flanged Fittings Class 25, 125, 250, and 800.
ANSI B16.5	Pipe Flanges and Flanged Fittings, Steel, Nickel Alloy, and Other Special Alloys.
ANSI B46.1	Surface Texture.
ANSI S12.6	Method for the Measurement of the Real-Ear Attenuation of Hearing Protections.
ANSI/ASME B1.20.1	General Purpose Pipe Threads (inch).
ANSI/ASME B31.1	Power Piping.
ANSI/AWWA D100	Welded Steel Tanks for Water Storage.
AWWA C206	Field Welding of Steel Water Pipe.
ASTM A 48	Specification for Gray Iron Castings.
ASTM A 108	Specification for Steel Bars, Carbon, Cold-Finished, Standard Quality.

1.4 CONTRACTOR SUBMITTALS

A. Submittals shall be made in accordance with the GENERAL REQUIREMENTS.

B. Shop Drawings: The CONTRACTOR shall furnish complete shop drawings for all equipment specified in the various Sections, together with all piping, valves, and controls for review by the ENGINEER in accordance with SUBMITTALS of the GENERAL REQUIREMENTS.

C. Tools: Where the equipment is manufactured to require special tools for maintenance other than those normally available commercially, the CONTRACTOR shall supply one complete set of

special wrenches or other special tools necessary for the assembly, adjustment, and dismantling of the equipment. All tools shall be of best quality hardened steel forgings with bright, finished heads and with work faces dressed to fit nuts. The set of tools shall be neatly mounted in a labeled tool box of suitable design provided with a hinged cover.

D. Spare Parts: The CONTRACTOR shall obtain and submit from the manufacturer a list of suggested spare parts for each piece of equipment according to the provisions of SPARE PARTS of the GENERAL REQUIREMENTS. After approval, CONTRACTOR shall furnish such spare parts suitably packaged, identified with the equipment number, and labeled. CONTRACTOR shall also furnish the name, address, and telephone number of the nearest distributor for each piece of equipment. All spare parts are intended for use by the CITY, only, after expiration of the guaranty period. Any spare parts which the ENGINEER permits the CONTRACTOR to use for startup activities shall be replaced by the CONTRACTOR prior to the CITY's acceptance of beneficial use of the equipment.

1. During the term of this Contract the CONTRACTOR shall notify the ENGINEER in writing about any manufacturer's modification of the approved spare parts, such as part number, interchangeability, model change or others. If the ENGINEER determines that the modified parts are no longer applicable to the supplied equipment, the CONTRACTOR at its expense shall provide applicable spare parts.

E. Torsional Analysis: The CONTRACTOR shall submit to the ENGINEER a torsional and lateral vibration analysis of the following equipment, in accordance with the GENERAL REQUIREMENTS. The analysis shall be performed by a specialist experienced in this type of work and approved by the ENGINEER.

1. All engine drives.

2. All blowers and compressors with drives of 100 horsepower and over.

3. All vertical pumps with universal joints and extended shafts.

4. All other equipment where specified.

The torsional natural frequency of the drive train must be avoided by $\pm$25 percent by any exciting frequency of the equipment, throughout the entire operating range.

F. Vibration Analysis: In the bid price the CONTRACTOR shall include at least two site visits of the above mentioned specialist for each type and size of equipment, during construction and testing of the equipment, to analyze and measure the amount of equipment vibration and make a written recommendation for keeping the vibration at a safe limit. The CONTRACTOR shall implement those recommendations to meet provisions of the specifications.

1.5 QUALITY ASSURANCE

A. Inspection, Startup, and Field Adjustment: The CONTRACTOR shall demonstrate that all equipment meets the specified performance requirements. CONTRACTOR shall provide the services of an experienced, competent, and authorized service representative of the manufacturer of each item of major equipment and shall visit the site of work to perform the following tasks.

1. Assist the CONTRACTOR in the installation of the equipment.

2. Inspect, check, adjust if necessary and approve the equipment installation.

3. Start-up and field-test the equipment for proper operation, efficiency, and capacity.

4. Perform necessary field adjustments during the test period until the equipment installation and operation are satisfactory to the ENGINEER.

5. Instruct the CITY's personnel in the operation and maintenance of the equipment. Instruction prior to system testing of the equipment shall include step-by-step troubleshooting procedures with all necessary equipment testing.

6. The vendor's rep shall provide a letter certifying the installation with approved test results attached.

B. Costs: The costs of all inspection, startup, testing, adjustment, and instruction work performed by factory-trained representatives shall be borne by the CONTRACTOR. The CITY will pay for costs of power and water. When available, the CITY's operating personnel will provide assistance in the field testing.

C. Public Inspection: It shall be the responsibility of the CONTRACTOR to inform the local authorities, such as building and plumbing inspectors, fire marshal, CAL-OSHA inspectors, and others, to witness all required permits and issue certificates, and pay all fees.

D. Tolerance: Tolerances and clearances shall be as shown on the shop drawings and shall be closely adhered to. Machine work shall in all cases be of high-grade workmanship and finish, with due consideration to the special nature or function of the parts. Members without milled ends and which are to be framed to other steel parts of the structure may have a variation in the detailed length of not greater than 1/16-inch for members 30 feet or less in length, and not greater than 1/8-inch for members over 30 feet in length.

E. Machine Finish: The type of finish shall be the most suitable for the application and shall be shown in micro-inches in accordance with ANSI B46.1. The following finishes shall be used:

1. Surface roughness not greater than 63 micro-inches shall be required for all surfaces in sliding contact.

2. Surface roughness not greater than 250 micro-inches shall be required for surfaces in contact where a tight joint is not required.

3. Rough finish not greater than 500 micro-inches shall be required for other machined surfaces.

4. Contact surfaces of shafts and stems which pass through stuffing boxes and contact surfaces of bearings shall be finished to not greater than 32 micro-inches.

F. All equipment and material furnished for the project shall be brand new and free of material and manufacturing defects.

G. Manufacturer's Experience: Unless otherwise directed by the ENGINEER, all equipment furnished shall have a record of at least 5 years of successful, trouble free operation in similar applications, from the same manufacture.

PART 2 - PRODUCTS

2.1 GENERAL REQUIREMENTS

A. Noise Level: When the equipment is in operation, no single piece of equipment shall exceed the CAL-OSHA noise level requirements for a one-hour exposure, or the City of Los Angeles Building and Safety requirements.

B. Personal Hearing Protection: Where specified, the CONTRACTOR shall supply, in their original unopened packaging, three pairs of high attenuation hearing protectors. The ear protectors shall be capable of meeting the requirements of ANSI S12.6 and shall produce a noise level reduction of 25 dBA at a frequency of 500 Hz. The hearing protectors shall have fluid filled ear cushions and an adjustable, padded headband. The protectors shall be stored in a weatherproof, labeled, steel cabinet, furnished by the CONTRACTOR and mounted in an approved location near the noise producing equipment.

C. Service Factors: Service factors shall be applied in the selection or design of mechanical power transmission components. Unless otherwise specified, the following load classifications shall apply in determining service factors:

Type of Equipment	Load Classification
Blower:	
Centrifugal or vane	Uniform
Lobe	Moderate Shock
Reciprocating Air Compressor:	
Multi-Cylinder	Moderate Shock
Single-Cylinder	Heavy Shock
Pump:	
Centrifugal or Rotary	Uniform
Reciprocating	Moderate Shock
Mixer:	
Constant Density	Uniform
Variable Density	Moderate Shock
Flocculator or Clarifier	Uniform
Sludge Thickener	Moderate Shock
Grit Handling Equipment	Moderate Shock
Trash Rack Rake	Moderate Shock
Crane or Hoist	Moderate Shock

D. For service factors of electric motors, see Section 16490 - Electric Motors. Where load classifications are not specified, best modern practice shall be used.

E. Welding: Unless otherwise specified or shown, all welding shall conform to the following:

1. Latest version of ANSI/AWWA D100.

2. Latest revision of AWWA C206.

3. All composite fabricated steel assemblies which are to be erected or installed inside a hydraulic structure, including any fixed or movable structural components of mechanical equipments, shall have continuous seal welds to prevent entrance of air or moisture.

4. All welding shall be by the metal-arc method or gas-shielded arc method as described in the American Welding Society's "Welding Handbook" as supplemented by other pertinent standards of the AWS. Qualification of welders shall be in accordance with the AWS Standards governing same.

5. All welders shall be City of Los Angeles certified.

6. In assembly and during welding, the component parts shall be adequately clamped, supported, and restrained to minimize distortion and for control of dimensions. Weld reinforcement shall be specified by the AWS code. Upon completion of the welding, all weld splatter, flux, slag, and burrs left by attachments shall be removed. Welds shall be repaired to produce a workmanlike appearance, with uniform weld contours and dimensions. All sharp corners of material which are to be painted or coated shall be ground to a minimum of 1/32-inch on the flat.

F. Protective Coating: All equipment shall be painted or coated in accordance with Section 09800 - Protective Coating, unless otherwise approved by the ENGINEER. Non-ferrous metal and corrosion-resisting surfaces shall be coated with grease or lubricating oil. Coated surfaces shall be protected from abrasion or other damage during handling, testing, storing, assembly, and shipping.

G. Protection of Equipment: All equipment shall be boxed, crated, or otherwise protected from damage and moisture during shipment, handling, and storage. All equipment shall be protected from exposure to corrosive fumes and shall be kept thoroughly dry at all times. Pumps, motors, drives, electrical equipment, and other equipment having anti-friction or sleeve bearings shall be stored in weather tight storage facilities prior to installation. For extended storage periods, plastic equipment wrappers should be avoided, to prevent accumulation of condensate in gears and bearings. For extended storage a desiccant should be included with all equipment.

H. Identification of Equipment Items: Each item of equipment shipped shall have a legible identifying mark corresponding to the equipment number shown or specified for the particular item.

I. Vibration Level: All equipment subject to vibration shall be provided with restrained spring-type vibration isolators or pads per manufacturer's written recommendation.

J. Shop Fabrication: Shop fabrication shall be preformed in accordance with the Contract Documents and the CONTRACTOR approved shop drawings.

2.2 EQUIPMENT SUPPORTS AND FOUNDATIONS

A. Equipment Supports: Unless otherwise shown, all equipment supports, anchors, and restrainers shall be adequately designed for static, dynamic, wind, and seismic loads. The design horizontal seismic force shall be greater of that noted in the general structural notes or as required by the governing building code, or 10 percent of gravity, whichever is greater.

B. Equipment Foundations: Equipment foundations shall be as per manufacturer's written recommendations. All mechanical equipment, tanks, control cabinets, etc., shall be mounted on minimum 3.5-inch-high concrete bases, unless otherwise shown or specified.

C. Shop Drawings: Shop drawings shall be submitted to the ENGINEER for review in accordance with the requirements of the GENERAL REQUIREMENTS. Shop Drawings will be considered incomplete unless clear, concise calculations are presented showing equipment anchorage forces and the capacitates of the anchorage elements provided by the CONTRACTOR.

2.3 PIPE HANGERS, SUPPORTS, AND GUIDES

A. All pipe connections to equipment shall be supported, anchored, and guided to avoid stresses and load on equipment flanges and equipment. Supports and hangers shall be in accordance with the requirements of Section 15340 - Hangers and Supports.

2.4 FLANGES AND PIPE THREADS

A. All flanges on equipment and appurtenances provided under this Section shall conform to ANSI B16.1, Class 125; or B16.5, Class 150, unless otherwise shown. All pipe threads shall be in accordance with ASNI/ASME B1.20.1, and the requirements of Section 15610 - Piping, General.

2.5 COUPLINGS

A. Flexible couplings shall be provided between the driver and the driven equipment to accommodate slight angular misalignment, parallel misalignment, end load, and to cushion shock loads. Where required for vertical shafts, 3-piece spacer couplings or universal type couplings for extended shafts shall be installed. Selection of flexible coupling shall include service factor of driven equipment.

B. The CONTRACTOR shall have the equipment manufacturer select or recommend the size and type of coupling required to suit each specific application.

C. Taper-lock bushings may be used to provide for easy installation and removal on shafts of various diameters.

D. Where universal type couplings are shown, they shall be of the needle bearing type construction, equipped with commercial type grease fittings.

2.6 SHAFTING

A. General: All shafting shall be continuous between bearings and shall be sized to transmit the power required. Keyways shall be accurately cut parallel with shaft centerline. Unless otherwise specified and justified by calculation, shafting shall not be turned down at the ends to accommodate bearings or sprockets whose bore is less than the diameter of the shaft. All shafts shall rotate in the end bearings and shall be turned and polished, straight and true.

B. Materials: Shafting materials shall be appropriate for the type of service and torque transmitted. Environmental elements such as corrosive gases, moisture, and fluids shall be taken into consideration. Materials shall be as shown or specified unless furnished as part of an assembly.

1. Low carbon cold-rolled steel shafting shall conform to ASTM A 108, Grade 1018.

2. Medium carbon cold-rolled shafting shall conform to ASTM A 108, Grade 1045.

3. Corrosion-resistant shafting shall be stainless steel or Monel, whichever is most suitable for the intended service.

C. Differential Settlement: Where differential settlement between the driver and the driven equipment may be expected, a shaft of sufficient length with 2 sets of universal type couplings shall be provided.

2.7 BEARINGS

A. General: Bearings shall conform to the standards of the Anti-Friction Bearing Manufacturers Association, Inc. (AFBMA).

B. To assure satisfactory bearing application, fitting practice, mounting, lubrication, sealing, static rating, housing strength, and other important factors shall be considered in bearing selection.

C. All lubricated-for-life bearings shall be factory-lubricated with the manufacturer's recommended grease to insure maximum bearing life and best performance.

D. Bearing Life: Except where otherwise specified or shown, all bearings shall have a minimum L-10 life expectancy of 5 years or 20,000 hours, whichever occurs first. Where so specified, bearings shall have a minimum rated L-10 life expectancy corresponding to the type of service, as follows:

Type of Service	Design Life (years)	B-10 Design Life (hours)
1. 8-hour shift	10	40,000
2. 16-hour shift	10	60,000
3. Continuous	10	100,000

E. Bearing housing shall be of cast iron or steel and bearing mounting arrangement shall be as specified or shown, or as recommended in the published standards of the manufacturer. Split-type housings may be used to facilitate installation, inspection, and disassembly.

F. Sleeve-type bearings shall have a Babbitt or bronze liner.

2.8 GEARS AND GEAR DRIVES

A. Unless otherwise specified, gears shall be of the helical or spiral-bevel type, designed and manufactured in accordance with AGMA Standards, with a gear teeth minimum service factor of 1.7, a minimum B-10 bearing life of 60,000 hours and a minimum efficiency of 94 percent. Worm gears shall not be used, unless specifically approved by the ENGINEER.

B. All gear speed reducers or increases shall be of the enclosed type, oil-or grease-lubricated and fully sealed, with a breather to allow air to escape but keep dust and dirt out. The casing shall be of cast iron or heavy-duty steel construction with lifting lugs and an inspection cover for each train. An oil level glass and an oil flow indicator shall be provided, arranged for easy reading.

C. Gears and gear drives as part of an equipment assembly shall be shipped fully assembled for field installation.

D. Gear design, manufacture and material selections shall be left to the discretion of the manufacturer, provided the above AGMA level of quality suitable for the application are met. Input and output shafts shall be adequately designed for the service and load requirements. Gears shall be computer-matched for minimum tolerance variation. The output shaft shall have 2 position seals to prevent oil leakage.

E. Oil level and drain location relative to the mounting arrangement shall be easily accessible. Oil coolers or heat exchangers with all required appurtenances shall be furnished when necessary.

2.9 DRIVE GUARDS

A. All power transmission, prime movers, machines, shaft extensions, and moving machine parts shall be guarded to conform with the Division of Industrial Safety General Industrial Safety Orders latest edition and the CAL-OSHA Safety and Health Standards 29CFR1910. The guards shall be constructed of minimum 10 gage expanded, flattened steel with smooth edges and corners, galvanized after fabrication and securely fastened. Where required for lubrication or maintenance, guards shall have hinged latched access doors.

2.10 FLEXIBLE CONNECTORS

A. General: Flexible connectors shall be installed in all piping connections to engines, blowers, compressors, and other vibrating equipment and in piping systems in accordance with the requirements of Section 15610 - Piping, General.

2.11 INSULATING CONNECTIONS

A. General: Where dissimilar materials are connected, insulating bushings, unions, couplings, or flanges, as appropriate, shall be used in accordance with the requirements of the Section 15610 - Piping, General.

2.12 GASKETS AND PACKINGS

A. Gaskets shall be in accordance with the requirements of Section 15610, "Piping, General."

B. Packing around valve stems and reciprocating shaft shall be compressible material, compatible with the fluid being used. Chevron-type "V" packing shall be Garlock No. 432, John Crane "Everseal," or equal. Pump seals shall be as specified in Section 11300 - Pumps, General.

C. Packing around rotating shafts (other than valve stems) shall be "O"-rings, stuffing boxes, or mechanical seals, as recommended by the manufacturer and approved by the ENGINEER, in accordance with Section 11300 - Pumps, General.

2.13 NAMEPLATES

A. Equipment nameplates of stainless steel shall be engraved or stamped and fastened to the equipment in an accessible location with No. 4 or larger oval head stainless steel screws or drive pins. Nameplates shall contain the manufacturer's name, model, serial number, size, characteristics, and appropriate data describing the machine performance ratings.

2.14 SAFETY REQUIREMENTS

A. Where work construction areas are located within a flammable or toxic gas environment, suitable gas detection, ventilating, and oxygen deficiency equipment shall be provided. Workers shall be equipped with approved breathing apparatus.

2.15 ANCHOR BOLTS

A. Equipment suppliers shall furnish calculations establishing the number, size, type, length, and embedment of anchor bolts required to mount the equipment safely in accordance with the Seismic characteristics proscribed by the specifications. The installing Contractor shall supply suitable anchor bolts for each item of equipment in accordance with the equipment Suppliers' recommendations, as approved by the Engineer. Bolting templates or setting drawings shall be delivered by the equipment Supplier to permit setting the anchor bolts when the structural concrete is placed by the installing Contractor. Two leveling nuts shall be used for each bolt. The anchor design calculations must be stamped by a California registered, professional civil or structural engineer.

B. Unless otherwise shown on the Drawings or specified, anchor bolts for items of equipment mounted on baseplates shall be long enough to permit 1-1/2 inches of grout beneath the baseplate and to provide adequate anchorage into structural concrete. Bolts shall extend with at least two threads over the nut after final alignment.

C. Unless otherwise specified or approved by the Engineer, anchor bolts, nuts, and washers shall be stainless steel.

2.16 LIFTING LUGS

A. Lifting Lugs: Equipment weighing over 80 pounds shall be provided with lifting lugs.

PART 3 - EXECUTION

3.1 COUPLINGS

A. The CONTRACTOR shall have the equipment manufacturer select or recommend the size and type of coupling required to suit each specific application; installation shall be per equipment manufacturer's printed recommendations.

3.2 INSULATING CONNECTIONS

A. All insulating connections shall be installed in accordance with the manufacturer's printed instructions.

3.3 PIPE HANGERS, SUPPORTS, AND GUIDES

A. Hangers, supports, and guides shall be spaced in accordance with ANSI/ASME B.31.1 standard, and with tables in Section 15340 - Hangers and Supports.

END OF SECTION

SECTION 11300
PUMPS, GENERAL

PART 1 - GENERAL

1.1 THE REQUIREMENT

A. The CONTRACTOR shall furnish and install all tools, equipment, materials, and supplies and shall perform all labor necessary for the installation, testing, and placing into operation of all pumps and pumping appurtenances, complete and operable, in accordance with the requirements of the Contact Documents.

B. The provisions of this Section shall apply to all pumps and pumping equipment specified, except where otherwise specified in the Contract Documents.

C. The CONTRACTOR shall assign to a single manufacturer full responsibility for the furnishing and functional operation of the complete pump system including the pumps, drives, drive motors, speed control equipment (where variable speed drives are required) and accessories. The designated single manufacturer, however, need not manufacture more than one part of the unit (pump, or motor and drive), but shall coordinate the design, assembly, testing, and erection of the unit(s) as specified herein.

1.2 RELATED WORK SPECIFIED ELSEWHERE

A. SUBMITTALS of the General Requirements.

B. Divisions 2 and 15 (as applicable) Piping.

C. Section 05500 - Metal Fabrications.

D. Section 09800 - Protective Coating.

E. Section 11000 - Equipment General Provisions.

F. Section 11310 - Variable Speed Drives, General.

G. Section 16020 - Municipal Facilities General Electrical Requirements.

H. Section 16340 - Low Voltage Motor Control.

I. Section 16490 - Electric Motors.

J. Section 17400 - Process Instrumentation and Control.

1.3 REFERENCE SPECIFICATIONS, CODES AND STANDARDS

A. Comply with the applicable Reference Specifications as specified in the General Requirements.

B. Commercial Standards:

ANSI B16.1	Cast Iron Pipe Flanges and Flanged Fittings, Class 25, 125, 250, and 800.

ANSI B16.5	Pipe Flanges and Flanged Fittings, Steel Nickel Alloy and Other Special Alloys.
ANSI/ASME B31.1	Power Piping.
ANSI/ASME B73.1M	Specifications for Horizontal End Suction Centrifugal Pumps for Chemical Process.
ANSI/ASME B73.2M	Specifications for Vertical In-Line Centrifugal Pumps for Chemical Process.
ANSI/AWWA E101	Deep Well Vertical Turbine Pumps - Line Shaft and Submersible Types.
ANSI/IEEE 112	Test Procedure for Polyphase Induction Motors and Generators.
ANSI/IEEE 115	Test Procedure for Synchronous Machines.
ASTM A 48	Specification for Gray Iron Castings.
ASTM A 470	Specification for Vacuum-Treated Carbon and Alloy Forgings for Turbine Rotors and Shafts.
ASTM A 536	Specification for Ductile Iron Castings.
ASTM E 448	Recommended Practice for Scleroscope Hardness Testing of Metallic Materials.
ASTM B 62	Specification for Composition Bronze or Ounce Metal Castings.
Latest Edition	Hydraulic Institute Standards for Centrifugal, Rotary, and Reciprocating Pumps.

1.4 CONTRACTOR SUBMITTALS

A. Submittals shall be made in accordance with the GENERAL REQUIREMENTS.

B. The following submittals and specific information shall be provided.

1. Pump name, identification number and specification number.

2. Performance curve and pump data.

3. The CONTRACTOR shall require the manufacturer to indicate points on the H/Q curves, and the limits recommended for stable operation between which the pumps may be operated without surge, cavitation and vibration. The stable operating range shall be as wide as possible based on the pumps actual hydraulic and mechanical tests.

4. Pump detailed description and specification.

5. Electrical data including control and wiring diagrams.

6. Assembly and installation drawings including shaft size, seal, coupling, anchor bolt plan, part nomenclature, material list, outline dimensions and shipping weights. Vendor shall also be required to supply calculations, signed by a registered California Professional Engineer, to establish the number, type size, length, embedment, etc. of anchor bolts needed to meet the Seismic requirements of the individual project location.

7. Pump drive and motor in accordance with Section 16490 "Electrical Motors".

8. Bearing life calculations.

C. Certification: The CONTRACTOR shall obtain written certification from the pump manufacturer, addressed to the CITY, stating that the equipment will efficiently and thoroughly perform the required functions in accordance with these Specifications and as shown, and that the pump manufacturer accepts joint responsibility with the CONTRACTOR for coordination of all equipment, including motors, variable speed drives, controls, and services required for proper installation and operation of the completely assembled and installed pumps. The CONTRACTOR shall submit all such certificates to the ENGINEER.

D. Technical Manuals: Prior to startup, the CONTRACTOR shall furnish the CITY complete operations and maintenance manuals in accordance with TECHNICAL MANUALS of the GENERAL REQUIREMENTS.

E. Tools: Special tools necessary for maintenance and repair of the pumps and one pressure grease gun for each type of grease required for pumps and motors shall be furnished as a part of the work hereunder; such tools shall be suitably stored in metal tool boxes, and identified with the equipment number by means of stainless steel or solid plastic name tags attached to the box.

F. Spare Parts: The CONTRACTOR shall obtain and submit from the manufacturer a list of recommended spare parts for each piece of equipment according to the provisions of SPARE PARTS of the General Requirements. After approval, CONTRACTOR shall furnish such spare parts suitably packaged, identified with the equipment number, and labeled. CONTRACTOR shall also furnish the name, address, and telephone number of the nearest distributor for each piece of equipment. All spare parts are intended for use by the CITY, only, after expiration of the guaranty period. Any spare parts which the ENGINEER permits the CONTRACTOR to use for startup activities shall be replaced by the CONTRACTOR prior to the CITY's acceptance of beneficial use of the equipment.

1. During the term of this Contract the CONTRACTOR shall notify the ENGINEER in writing about any manufacturer's modification of the approved spare parts, such as part number, interchangeability, model change or others. If the ENGINEER determines that the modified parts are no longer applicable to the supplied equipment, the CONTRACTOR at its expense shall provide applicable spare parts.

G. Field Procedures: Instructions for field procedures for erection, adjustments, inspection, and testing shall be provided prior to installation of the pumps.

1.5 QUALITY ASSURANCE

A. Performance Curves: All centrifugal pumps shall have a continuously rising curve. In no case shall the required horsepower at any point on the performance curve exceed the rated horsepower of the motor or engine.

B. Equipment Testing: The CONTRACTOR shall be responsible for the coordination of the following tests of each pump, drive, and motor:

1. General: Tests shall be performed in accordance with the Test Code for Centrifugal Pumps of the Standards of the Hydraulic Institute, Inc. Tests shall be performed on the actual assembled unit from shut-off head condition to 125 percent of the required maximum design capacity. Prototype model tests will not be acceptable. Pumps and motors shall be factory-tested, as defined herein.

2. Factory Tests of Pumps: All pumps and motors of sizes 10 to 125 hp (inclusive) shall be factory-tested in accordance with the above specifications. Seven sets of Certified test data shall be submitted to the ENGINEER. This data shall include, but not be limited to the following:

    a. Hydrostatic test with data recorded.
    b. Hydraulic test with a minimum of 5 readings between shutoff head and 125 percent of the maximum design capacity, recorded on data sheets as defined by the Hydraulic Institute, signed, dated, and certified.
    c. Certified pump curves showing head/flow, bhp, and efficiency.
    d. Certification that the pump hp demand will not exceed the rated motor hp beyond the 1.0 service rating at any point on the curve.

3. Factory Tests of Motors: All motors of sizes 10 hp and larger, shall be assembled, tested, and certified at the factory and the working clearances checked to insure that all parts are properly fitted. The tests shall be in accordance with ANSI/IEEE 112 and ANSI/IEEE 115 standards, including heat run and efficiency tests. All computations shall be recorded and 7 certified and dated copies of the test results shall be furnished to the ENGINEER.

4. Factory Witnessed Tests: All pumps, variable speed drives, and motors, 150 hp and larger, shall be factory-tested as complete, assembled units, as specified above, and witnessed by the ENGINEER and the INSPECTOR. The manufacturer shall give the Engineer a minimum of 2 weeks notification prior to the test. All costs for INSPECTOR and ENGINEER shall be borne by the CONTRACTOR and included in the bid price. Such costs shall include travel and subsistence for 2 people but shall exclude any salaries. Test results in triplicate shall be submitted to the ENGINEER and no equipment shall be shipped until the test data have been approved by the ENGINEER and the INSPECTOR.

5. Acceptance: In the event of failure of any pump to meet any of the above requirements or efficiencies, the CONTRACTOR shall make all necessary modifications, repairs, or replacements to conform to the requirements of the Contract Documents and the pump shall be re-tested at no additional compensation, until found satisfactory.

C. Field Tests: All pumping units shall be field tested after installation, in accordance with the Contract Documents, to demonstrate satisfactory operation, without causing excessive noise, vibration, cavitation, and overheating of the bearings. The field testing shall be performed in the presence of an experienced field representative of the manufacturer of each major item of equipment, who shall supervise the following tasks and shall certify in writing that the equipment and controls have been properly installed, aligned, lubricated, adjusted, and readied for operation:

1. Start-up, check, and operate the equipment over the entire speed range. Any vibration shall be within the amplitude limits recommended in the Hydraulic Institute Standards and it shall be recorded at a minimum of 4 pumping conditions defined by the ENGINEER.

2. Pump performance shall be documented by obtaining concurrent readings, showing motor voltage, amperage, pump suction head, and pump discharge head, for at least 4 pumping conditions at each pump rpm. Each power lead to the motor shall be checked for proper current balance.

3. Bearing temperatures shall be determined by a contact-type thermometer. A running time of at least 20 minutes shall be maintained for this test, unless liquid volume available is insufficient for a complete test.

4. Electrical and instrumentation testing shall conform to applicable sections of these Specifications.

5. The field testing shall be witnessed by the ENGINEER and the INSPECTOR. In the event any of the pumping equipment fails to meet the above test requirements, it shall be modified and retested in accordance with the requirements of these Specifications. The CONTRACTOR shall then certify in writing that the equipment has been satisfactorily tested, and that all final adjustments thereto have been made. Certification shall include date of final acceptance test, as well as a listing of all persons present during tests, and resulting test data. The costs of all work performed in this Paragraph by factory-trained representatives shall be borne by the CONTRACTOR. The CITY will pay for costs of power and water. When available, the CITY's operating personnel will provide assistance in the field testing.

1.6 MANUFACTURER'S SERVICE REPRESENTATIVE

A. Erection and Startup Assistance: Service and instruction assistance by the manufacturer's engineering representative for each pump 10 hp and larger shall be provided by the CONTRACTOR during the following periods:

1. During erection.

2. During startup.

B. Instruction of CITY's Personnel: The CONTRACTOR shall provide for the services of a factory service representative to instruct the CITY's personnel in the operation and maintenance of the equipment. This service shall consist of a one day's visit to the plant for each type of similar pumps.

1.7 GUARANTEES, WARRANTIES

A. After completion, the CONTRACTOR shall furnish to the CITY the manufacturer's written guarantees, that the pumping equipment will operate with the published efficiencies, heads, and flow ranges and meet these specifications. The CONTRACTOR shall also furnish the manufacturer's warranties as published in its literature and as specified.

PART 2 - PRODUCTS

2.1 GENERAL

A. The CONTRACTOR shall furnish and install only such pumping equipment as the designated single manufacturer certifies is suitable for use with its equipment and the service conditions.

B. All manufactured items provided under this Section shall be new, of current manufacture, and shall be the products of reputable manufacturers specializing in the manufacture of such products; such manufacturers shall have had previous experience in such manufacture and shall, upon request of the ENGINEER, furnish the names of not less than 5 successful installations of its equipment of comparable nature to that offered under this contract.

C. All combinations of manufactured equipment which are provided under these specifications shall be entirely compatible, and the CONTRACTOR and the designated single manufacturer shall be responsible for the compatible and successful operation of the various components of the units conforming to specified requirements. Each unit of pumping equipment shall incorporate all basic mechanisms, coupling, electric motor or engine drive and unit mounting. All necessary mountings and appurtenances shall be included.

D. Where 2 or more units of the same type and/or size of pumping equipment are required, such units shall all be produced by the same manufacturer.

2.2 MATERIALS

A. All materials furnished as part of the pumping equipment shall be suitable for its intended use and service. Materials not specifically called for shall be high-grade, standard commercial quality, free from all defects and imperfection that might affect the serviceability of the product for the purpose for which it is intended, and shall conform to the following requirements:

1. Cast iron pump casings and bowls shall be of close-grained gray cast iron, conforming to ASTM A 48, or equal.

2. Bronze pump impellers shall conform to ASTM B 62.

3. Stainless steel pump shafts shall be of Type 400, Series. Miscellaneous stainless steel parts shall be of Type 316 except in septic environment.

4. All anchor bolts, nuts and washers shall be Type 316 stainless steel, unless otherwise specified in individual pumping equipment specifications. Buried or submerged bolts, nuts and washers shall be of Type 316 stainless steel, unless otherwise specified by the Engineer.

2.3 PUMP APPURTENANCES

A. Nameplates: Each pump shall be equipped with a stainless steel nameplate indicating rated head and flow, impeller size, pump speed, and manufacturer's name and model number.

B. Solenoid Valves: The pump manufacturer shall furnish and install solenoid valves on the water or oil lubrication lines and on all cooling water lines. Solenoid valve electrical rating shall be compatible with the motor control voltage and shall be furnished complete with all necessary conduit and wiring installation from control panel to solenoid.

C. Pressure Gages: All pumps (except sample pumps, sump pumps, and hot water circulating pumps) shall be equipped with pressure gages installed at pump suction and discharge lines. Pressure gages shall be located in a representative location, where not subject to shock or vibrations, in order to achieve true and accurate readings. Pressure gages shall be furnished in conformance with Section 15360, "Meters and Gages".

D. Pump suctions shall be equipped with compound gages. Where subject to shock or vibrations, the pressure gages shall be provided with snubber and wall-mounted or attached to galvanized channel floor stands and connected by means of flexible connectors.

E. Variable Speed Drives: Variable speed drives, drive motors, speed control equipment, and accessories shall be furnished in accordance with applicable Division 11 sections.

2.4 PUMP REQUIREMENTS - GENERAL

A. Flanges: Suction and discharge flanges shall conform to ANSI standard B16.1 or B16.5 dimensions.

B. Lubrication: Vertical pump shafts shall be product water-lubricated, unless otherwise specified. Deep-well pumps and pumps with dry barrels shall have water- or oil-lubricated bearings and seals.

C. Handholes: Handholes on pump casings shall be shaped to follow the contours of the casing to avoid any obstructions in the water passage.

D. Vortex Suppressors: Vertical pumps with insufficient submergence shall be furnished with vortex suppressors.

E. Drains: All gland seals, air valves, and cooling water drains, and drains from variable speed drive equipment shall be piped to the nearest floor sink, or drain, with galvanized steel pipe or copper tube, properly supported with brackets.

F. Grease Lubrication: For all vertical propeller, mixed-flow, and turbine pumps, other than deep well pumps, of bowl sizes 10-inch and larger, the CONTRACTOR shall provide a stainless steel tube attached to the column for grease lubrication of bottom bearing.

G. Stuffing Boxes: Where stuffing boxes are specified for the pump seal, they shall be of the best quality, using the manufacturer's suggested materials best suited for the specific application. For sewage, sludge, drainage, and liquids containing sediments, the seals shall be fresh-water flushed, using lantern rings. If fresh water is not available, the seal shall be flushed with product water cleaned by means of a solids separator as specified in the individual pump specifications. Unless otherwise specified, the packing material shall be interlaced Teflon braiding, containing 50 percent ultrafine graphite impregnation to satisfy the following specification:

Shaft speeds	-	up to 2500 fpm
Temperature	-	up to 500 degrees F
pH range	-	0-14

H. Mechanical Seals: Unless otherwise specified mechanical seal designs shall be selected for highest reliability and for rugged service. Mechanical seals shall be provided where called out, and they shall be water-flushed, unless otherwise specified. Water flushing shall be as described above. Unless the pump manufacturer recommends a better seal for a specific application, the following mechanical seals shall be furnished with the pumps:

Sewage, Sludge, or Wastewater Pumps	-	Double seals: John Crane Type I Double; Borg-Warner Type L double**;** Or equal.

I. For all seal arrangements, a buffer fluid must be circulated a minimum 20 psi above suction pressure, or as required by manufacturer, in order to maintain reliable seal performance.

J. Preferred seals for all services other than chemicals and corrosives should be equipped with non-clogging, single coil springs and non-sliding, internal, secondary elastomers. Metal parts are to be of 300 series, corrosion-resistant materials.

PART 3 - EXECUTION

3.1 INSTALLATION

A. General: Pumping equipment shall be installed in accordance with approved procedures submitted with the shop drawings and as shown, unless otherwise approved by the ENGINEER.

B. Alignment: Equipment shall be field tested to verify proper alignment, operation as specified, and freedom from binding, scraping, vibration, shaft runout, or other defects. Pump drive shafts shall be measured just prior to assembly to ensure correct alignment. Equipment shall be secured in position and fixed neatly in appearance.

C. Lubricants: The installation work shall include furnishing the necessary oil and grease for initial operation.

3.2 PROTECTIVE COATING

A. All exposed materials, except corrosion-resistant metals which have not been shop painted, shall be field coated as specified in Section 09800, "Protective Coating". Shop painted items which suffered damage to the shop coating shall be touched up as specified in Section 09800 "Protective Coating."

END OF SECTION

SECTION 11310
VARIABLE SPEED DRIVES, GENERAL

PART 1 - GENERAL

1.1 THE REQUIREMENT

A. The CONTRACTOR shall furnish and install all variable speed drive equipment complete with drive motor, speed control unit, accessories, connections, supports, control housing, and appurtenances as shown and as specified in each variable speed drive Section, to provide a complete and workable installation in accordance with the requirements of the Contract Documents.

1.2 RELATED WORK SPECIFIED ELSEWHERE

A. Section 11000 - Equipment General Provisions.

B. Division 16, Section 16310: Variable Frequency Drive Units.

1.3 REFERENCE SPECIFICATIONS, CODES AND STANDARDS

A. Comply with the applicable reference specifications as specified in the GENERAL REQUIREMENTS.

1.4 CONTRACTOR SUBMITTALS

A. Submittals shall be made in accordance with the GENERAL REQUIREMENTS.

B. The CONTRACTOR shall provide and submit complete, detailed shop drawings of all the equipment, controls, enclosures, weather protection, tools, and manufacturer's recommended spare parts as referenced above.

1.5 QUALITY ASSURANCE (Not Used).

PART 2 - PRODUCTS

2.1 GENERAL

A. Equipment Compatibility: Each variable speed drive shall be compatible with the equipment it serves, and the CONTRACTOR shall assign to the manufacturer of the driven equipment the unit responsibility for the entire package, including wiring, cooling, and weather protection. The manufacturer of the variable speed drive equipment shall have a record of at least 10 years' experience for the proposed system, successfully used in similar applications.

B. Enclosures: Where outdoor enclosures are provided for the control equipment:

1. Enclosures shall be of sufficient size to afford access to all parts, and clearance for passage in front of the enclosure to satisfy all code requirements.

2. There shall be sufficient lighting in the cabinet for maintenance work.

3. The enclosures shall be made of enameled steel, fiber glass, or similar durable material, with locking device and all necessary safety devices, and corrosion protection.

4. Where exposed to the weather, drive housing shall be weather-protected, ventilated, or air conditioned, as required for trouble-free operation, with air filters to eliminate dust problems.

5. Control cabinets shall be mounted on concrete bases, extending not less than 4 inches above highest portion of surrounding ground.

2.2 DESIGN AND CONSTRUCTION

A. Design: The drives shall be of the horizontal or vertical type, as shown, and meet the following additional requirements:

1. They shall be capable of converting a fixed input speed from a standard motor to a variable output speed, as specified for the driven equipment.

2. There shall be, either, no slip allowed when the drive is operating at top rated speed; or, for models with slippage there shall be sufficient allowance made in sizing the driven equipment to obtain the specified capacity.

3. The drives shall be able to vary speed on demand with smooth acceleration or deceleration, without any vibration or shock loading, to meet the operating conditions of the equipment specifications, without overloading or overheating the drive or the motor.

B. Construction: All rotating parts shall be of top grade steel or ductile iron, encased in a cast iron or steel housing. Input and output shafts and members shall be carefully aligned and carried in sleeve or antifriction bearings. The bearings design and bearing life shall be as specified in Section 11000, Paragraph 2.7, Bearings.

C. Lubrication: All transmission parts and bearings shall be continuously lubricated and cooled by oil or grease, as required for trouble-free operation.

D. Cooling: Each drive shall be furnished with any necessary cooling equipment, complete with heat exchangers, fans, air conditioning, temperature probes, controls, safety shut-down, alarm, and accessories, fully integrated as a complete system. All cooling devices shall be constructed to enable regular maintenance or removal without dismantling of the drive.

E. Controls: The control systems shall be capable of accepting the specified signals corresponding to liquid level, flow, pressure, or temperature of the process as shown, and automatically vary the output speed in proportion to the signal. The control unit shall be provided with local speed indicator.

2.3 SPARE PARTS

A. Each variable speed drive assembly shall be furnished with all necessary spare parts as recommended by the Manufacturer. All parts shall be properly labeled and identified with the name and number of the equipment to which they belong.

B. A list of spare parts shall be submitted according to the provisions of Section 11000 - Equipment General Provisions.

PART 3- EXECUTION

3.1 INSTALLATION

A. All variable speed drives shall be installed in strict accordance with the Manufacturer's printed instructions. The CONTRACTOR shall provide the services of a factory-trained Manufacturer's representative, who shall assist during installation and testing of the equipment, and training of the CITY's operating personnel.

END OF SECTION

THIS PAGE INTENTIONALLY LEFT BLANK

SECTION 11430
VERTICAL TURBINE PUMPS

PART 1 - GENERAL

1.1 THE REQUIREMENT

A. The CONTRACTOR shall furnish and install vertical turbine pumps, vertical electric motors, and all appurtenant work, complete and operable, in accordance with the requirements of the Contract Documents.

1.2 RELATED WORK SPECIFIED ELSEWHERE

A. Section 03315 - Grout.

B. Section 09800 - Protective Coating.

C. Section 11000 - Equipment General Provisions.

D. Section 11300 - Pumps, General.

E. Section 16490 - Electric Motors.

1.3 REFERENCE SPECIFICATIONS, CODES AND STANDARDS

A. Comply with the applicable reference specifications as specified in Section 11300, "Pumps, General" and as specified herein.

1. National Fire Protection Agency (NFPA 820).

1.4 CONTRACTOR SUBMITTALS

A. Submittals shall be made in accordance with the GENERAL REQUIREMENTS.

B. The submittal shall include complete fabrication, assembly, foundation, and installation drawings, together with detailed specifications, and data covering materials used, parts, devices and other accessories forming a part of the equipment furnished, including the following information:

1. Pumps:

a. Name of Manufacturer.
b. Type and Model.
c. Rotative Speed.
d. Size of suction nozzle.
e. Size of discharge nozzle.
f. Type of bearings.
g. Net weight of pump motor only.
h. Complete performance curve showing capacity vs. head, NPSH required, efficiency, and kW input.
i. Data on shop painting.

2. Motors:

   a. Name of Manufacturer.
   b. Type and Model.
   c. Type of bearing and lubrication.
   d. Rated size of motor, hp.
   e. Temperature rating.
   f. Full load rotative speed.
   g. Net weight.
   h. Service factor.
   i. Efficiency at full load and pump design point.
   j. Full load current.
   k. Locked rotor current.

3. Control Panel and Components:

   a. Name of Manufacturer.
   b. Type and Model.
   c. Dimensions and net weight of complete panel.
   d. Overcurrent characteristics and details of motor control.

1.5 QUALITY ASSURANCE

A. General: Unless otherwise specified herein, quality assurance of all submersible pumps and motors shall be as specified in Section 11300, "Pumps, General."

B. Factory Tests: All vertical turbine pumps and motors shall be factory tested as specified in Section 11300 "Pumps, General" and as specified herein.

   1. Hydrostatic Testing: All pumps shall be hydrostatically tested to a minimum pressure of 1.5 times the shut off head plus maximum suction pressure of the pump. Each pump and motor shall be tested as one assembled unit and shall show zero leakage.

C. Field Tests:

   1. General: After installation of the pumping equipment, electrical, instrumentation and control, the CONTRACTOR shall be responsible to make sure that all the work has been checked, and all equipment has been tested in conformance with the drawings and specifications. Field tests shall be conducted in the presence of the ENGINEER, plant operation personnel in three stages.

   2. Test No. 1: The CONTRACTOR shall notify the ENGINEER at least two weeks prior to the scheduled test. Each pump shall be operated for a minimum period of 24 hours in air (unsubmerged).

   3. Test No. 2: Each pump shall be operated for a minimum period of 24 hours with the motor fully loaded.

   4. Test No. 3: The final test shall be conducted for a period of 7 continuous days, 24 hours a day in automatic operation. The pumping plant shall be operated throughout the range of operation simulating the daily variation of flow. In the even that the incoming flow will not be enough to simulate operation of the pumping plant, the CONTRACTOR shall provide a signal generator or other equivalent equipment to simulate the rise and fall of wet well level, and all shutoff and alarm safety devices to demonstrate that the control system was

installed to satisfy the design conditions as shown and specified in the Contract Document.

Upon proper determination by the ENGINEER that the pumping system has operated satisfactorily without major failure, the pumping system shall be recommended for acceptance by the ENGINEER and the INSPECTOR.

PART 2 - PRODUCTS

2.1 GENERAL REQUIREMENTS

A. Power Supply: Power supply to equipment will be 480 volts, 60-Hz, 3-phase.

B. Anchor Bolts: All anchor bolts, nuts and washers shall be Type 316 stainless steel and shall comply with anchor bolds and expansion anchors section. Anchor bolts shall be accurately located and centered in pipe sleeves having an inside diameter approximately 2-1/2 times the bolt diameter and with a length approximately 8 times the bolt diameter.

C. Painting: All iron and steel parts which will be in contact with pumped liquid or submerged after installation, including the inside of the impeller, discharge elbow, shall be shop cleaned in accordance with the coating manufacturer's recommendations and painted with an epoxy coating system. The coating shall have a dry film thickness of at least 10 mils and shall consist of a prime (first) coat and one or more finish coats. At least one quart of the finish coat shall be furnished with each pump for field touchup painting.

D. Construction of vertical turbine pumps shall conform to the following requirements:

1. Impeller: 316 Stainless steel, statically balanced.

2. Bowl: Cast Iron.

3. Bowl shaft: 416 stainless steel.

4. Suction bell: Galvanized steel.

5. Column: Steel pipe, not less than Schedule 30, epoxy-coated, in maximum 10-ft lengths, Galvanized steel.

6. Lineshaft: Type 416 Stainless steel, open, in maximum 10-ft lengths.

7. Bowl bearing: Bronze (Alloy C89835).

8. Discharge Head: Cast Iron.

9. Shaft lubrication: Product Lubricated.

10. Shaft seal: Stuffing box with Lantern rings.

11. Discharge head: Cast iron, epoxy-lined, with flange, base plate, and minimum 1-1/4-inch, 3000 lb forged steel connections for air valve, pressure switch, and drain.

12. Shaft coupling: 3-piece, adjustable spacer coupling.

13. Sole plate: Extra-heavy, hot dip galvanized-carbon steel sole plate, drilled and tapped to match discharge head (required, only, for pumps not mounted on a pump barrel).

E. Manufacturer: Franklin Electric model FVT-8FHC (with Enclosed Impeller); or equal.

2.2 PERFORMANCE AND DESIGN REQUIREMENTS

A. Pumping units shall be designed for the following operating conditions and requirements:

1. Unit Designation - P-104.

2. Location - Pump Station Wet Well (PSWW1).

3. Number of pumping units - 1.

4. Service - Irrigation.

5. Operation (hours per day) - 24 hours per day.

6. Capacity (gpm) max - 450 gpm.
   At design point - 350 gpm.
   Min - 200 gpm.

7. NPSH available at bowl Ample.
   Available at low liquid level Ample.

8. Pump head (TDH -ft):
   At max gpm - 15.0
   At design point - 25.3.
   At min gpm - 26.0

9. Wire-to-water efficiency at design point, min (percent) - 62.47%.

10. Liquid to be pumped - Lake Water for Irrigation.

11. Specific gravity of liquid - 1.0.

12. Liquid temperature (degrees F) - 65.

13. Max pump speed (rpm) - 1750.

14. Min motor size (hp) - 5.

15. Depth of wet well (ft) - 10.

16. Water depth in wet well (ft):
    Min - 1.5.
    Max - 7.5.

17. Length from base plate to suction bell (ft) – 6.86.

18. Max bowl diameter (in) - 6.31".

19. Min column diameter (in) - 4.

20. Size of discharge flange (in) - 4.

21. Discharge flange rating (psi) - 175.

B. Pump performance shall be stable and free from cavitation and noise throughout the specified operating head range at minimum suction submergences. The design running clearance between the impeller inlet and the casing wearing ring (if provided) shall be not less than 0.006-inch or one-half mil per inch of casing wearing ring diameter, whichever is greater.

C. Each pumping unit shall be designed so that reverse rotation at rated head will not cause damage to any component.

D. Direct Drive with vertical solid shaft, electric, heavy-duty motor capable of accepting the total, unbalanced thrust imposed by the pump and suitable for 480 volt, 3-phase, 60-Hz ac power supply, in accordance with Section 16490 "Electric Motors."

2.3 MATERIALS

A. Bowl Shaft/ Bowl Shaft Coupling: 416 Stainless Steel.

B. Bowl Bearing: Bronze ASTM B62.

C. Bowl: Cast Iron ASTM A48.

D. Impeller: 316 Stainless Steel.

E. Strainer: Galvanized Steel.

F. Column: Steel ASTM A53.

G. Lineshaft: 416 Stainless Steel.

H. Discharge Head: Cast Iron.

I. Suction Bearings: Bronze.

J. Packing Box: Cast Iron.

K. Stuffing Box Bearing: Bronze.

L. Discharge Head Seal: Braided Graphite Packing with Stainless Gland.

M. Protective Coating:

1. Coatings and linings shall not be applied until equipment has been fabricated, weld-spatter removed, welds ground smooth, sharp edges and corners ground to a curve, hydrostatic tests completed, surfaces cleaned with clean mineral spirits, and abrasive blasting performed.

2. All internal and external surfaces of material and equipment furnished shall be painted, except for stainless steel material items, galvanized surfaces that are not color matched

to surrounding components, and surfaces machined to achieve a specified fit or tolerance. All such surfaces shall be prepared, shop primed and painted in accordance with Section 09800 – "Protective Coating". Coating systems to be applied for each pump component shall be as specified on pump data sheet.

2.4 PUMP CONSTRUCTION

A. Pump Discharge Head:

1. Unless otherwise shown on drawings, the pump discharge head shall be for above ground discharge and mounted to sole plate.

2. Pumps shall be designed for satisfactory performance if subjected to forces and moments in HI 9.6.2 for nozzle sizes up to 36 inches.

3. Discharge head shall have 1/2 inch NPT pressure gauge connection.

4. Discharge head shall be mounted to sole plate.

5. Flanges.

   a. Flanges shall be flat face, unless otherwise noted.

6. Shaft Sealing:

   a. Seals shall be flushed with the pumpage unless otherwise indicated. Drain connection and piping shall be provided on the seal housing.

   b. Stuffing box shall be tapped to permit introduction of seal liquid and shall hold a minimum of five rows of packing, lantern ring, and throat bushing.

B. Shaft:

1. Shafting stress shall not exceed 1/3 yield in torsion which is 1/6 published yield stress, based on rated horsepower of the motor.

2. Line shaft couplings shall be threaded or keyed to the shaft. Line shaft couplings shall be self-tightening in the direction of rotation or positive-locking devices shall be provided. Keyed line shaft couplings shall be held in place by stainless steel set screws.

3. Shafts shall be provided with a minimum of 8 mils hard chrome facing under the stuffing box and all bearing/guide areas.

C. Column:

1. Column sections shall be connected by flanges to each other, to the bowl assembly and to the pump discharge head.

2. Maximum length shall be 10 feet.

3. Lifting Lugs: Each column section shall have 2 lifting lugs, minimum. When stainless steel is specified, column pipe shall be free from any carbon contamination and shall be cleaned picked, passivated inside and out in accordance with ASTM A380.

4. Line Shaft Guide Bushings (Bearings):

    a. Bearings shall be bronze C89320, C89325, or C89835.

    b. The maximum spacing between line shaft bearings shall be 5 feet center.

D. Suction Bell and Bowl Assembly:

1. The suction bell and bowls shall have flanges.

2. Suction bell and bowls constructed of cast iron shall have interior and exterior coating. Interior water passages shall be coated as indicated in Section 09800 - "Protective Coating."

3. Pump suction bell bearing shall have a bronze sand cap.

4. Impellers:

    a. Impellers shall be keyed to the shaft.

    b. Materials for impellers shall be as specified on data sheet.

    c. Impeller shall be statically and dynamically balanced to ISO 1940 G6.3.

E. Weldolets and Couplings:

1. Weldolets, couplings, etc. attached to carbon steel fabrications shall be 316 stainless steel. Couplings shall be set-in and double fillet welded inside and out when accessible, otherwise, use full-penetration bevel weld.

F. Bolting:

1. Bolting hardware shall comply with Section 15610 - "Piping, General" and below.

2. Wetted bolts, studs, and cap screws shall be stainless steel in accordance with ASTM A193, Type 316 or 316N, Grade B8M or B8MA. Wetted nuts shall be ASTM A194, Type 316 or 316 N, Grade 8M or 8MA.

G. Accessories:

1. Air Release Valve.

    a. Air release valve shall be provided on the pump discharge piping.

    b. The valve shall vent large quantities of air through the orifice when pump starts, close tight when liquid enters, and permit large quantities of air to re-enter through orifice when pump stops, to prevent vacuum forming in the pump column.

    c. Valves shall be of the size indicated, with flanged or screwed ends to match piping.

d. Bodies shall be of high-strength cast iron. Seat washers and gaskets shall be of a material ensuring water tightness with minimum maintenance.

e. A double-acting throttling device shall be provided on the discharge orifice to regulate and restrict air venting, which shall establish a pressure loading on the rising column of water and eliminate damaging shock to the pump, controls, and valves during pump start. On pump stop, this device shall automatically open, allowing full line unrestricted air re-entry to prevent any vacuum from forming in the pump column.

f. The valve shall be designed for minimum 250 psig water-working pressure.

g. Acceptable Manufacturers:

(1) DeZURIK.

(2) Val-Matic.

(3) Or equal.

h. Pump Anchorage - Pump shall be anchored in accordance with the layout, dimensions, details and anchorage shown on drawings verified by the Contractor for agreement with manufacturer's information and shop drawings. Where anchorage details are not shown on the design drawings, the Contractor shall submit structural calculations and details of the proposed anchorage prepared and stamped by a civil or structural engineer currently registered in the state of California.

2.5 ELECTRIC MOTORS

A. Motor shall be solid or hollow shaft as specified on the pump data sheet and provided in accordance with Section 16490 - "Electric Motors", and as specified herein.

B. The pump shall be driven by an explosion proof electric motor furnished by the pump manufacturer. Each motor shall be rated 460-volt, 60Hz, 3-phase and shall have a nameplate rating which exceeds the maximum horsepower required by the pump.

C. An anti-reverse rotation device shall be provided to lock the shaft against reverse direction.

D. Motor shall have a brake-horsepower output equal to or greater than the horsepower required to operate the pump at any point on the head-capacity curve while pumping liquid of the specified specific gravity.

E. Motor bearings shall be ball type and adequate to withstand the maximum anticipated radial and axial loads imposed by the pump. Bearing housings shall be provided with suitable seals to confine the lubricant and exclude moisture and dirt.

F. Motor nameplate horsepower shall not be exceeded at any head-capacity point on pump curve.

2.6 SHOP ASSEMBLY

A. Pumping units including pump and motor shall be completely assembled in the manufacturer's plant, and clearance and alignment between components shall be checked for compliance with the applicable shop drawings.

B. Pump shafts shall be aligned to the motor shaft and maximum run-out shall not exceed 0.003 inch total indicated run-out.

PART 3 - EXECUTION

3.1 GENERAL

A. Pump and driver shall be aligned to manufacturer's tolerances. Pump alignment shall be performed under the direction of the manufacturer's representative.

B. The Contractor shall furnish all necessary materials, tools and labor required for complete installation and alignment of equipment. Shimming, alignment, and grouting of pump mounting plate shall be in accordance with requirements of the manufacturer's instructions.

C. Installation and field testing shall be performed by the Contractor in accordance with the Hydraulic Institute Standards and recommendation of the pump manufacturer.

END OF SECTION

THIS PAGE INTENTIONALLY LEFT BLANK

SECTION 11510
SUBMERSIBLE NON-CLOG PUMPS

PART 1 - GENERAL

1.1 THE REQUIREMENT

A. The CONTRACTOR shall furnish all tools, equipment, materials, and supplies and shall perform all labor required to complete the work as indicated on the Drawings and specified herein.

B. This Section covers submersible, non-clog centrifugal pumping units and controls. Each pumping unit shall be complete with a submersible, electric motor; a floor-mounted discharge base and elbow; guide rails; access hatch cover; and all other appurtenances specified or otherwise required for proper operation.

1.2 RELATED WORK SPECIFIED ELSEWHERE

A. Section 03315 - Grout.

B. Section 09800 - Protective Coating.

C. Section 11300 - Pumps, General.

D. Section 11000 - Equipment General Provisions.

E. Section 11310 - Variable Speed Drives, General.

F. Section 16490 - Electric Motors.

1.3 REFERENCE SPECIFICATIONS, CODES AND STANDARDS

A. Comply with the applicable current provisions of the Codes and Standards as specified in Section 11300 - Pumps, General and as specified herein.

1. National Fire Protection Agency (NFPA 820).

1.4 CONTRACTOR SUBMITTALS

A. Submittals shall be made in accordance with the GENERAL REQUIREMENTS.

B. The submittal shall include complete fabrication, assembly, foundation, and installation drawings, together with detailed specifications, and data covering materials used, parts, devices, and other accessories forming a part of the equipment furnished, including the following information:

1. Pumps:

a. Name of Manufacturer.
b. Type and Model.
c. Rotative speed.
d. Size of suction nozzle.
e. Size of discharge nozzle.
f. Type of bearings.

g. Net weight of pump motor only.
h. Complete performance curve showing capacity vs. head, NPSH required, efficiency, and kW input.
i. Data on shop painting.

2. Motors:

a. Name of Manufacturer.
b. Type and Model.
c. Type of bearings and lubrication.
d. Rated size of motor, hp.
e. Temperature rating.
f. Full load rotative speed.
g. Net weight.
h. Service factor.
i. Efficiency at full load and pump design point.
j. Full load current.
k. Locked rotor current.

3. Control Panel and Components:

a. Name of Manufacturer.
b. Type and Model.
c. Dimensions and net weight of complete panel.
d. Overcurrent characteristics and details of motor control.

1.5 QUALITY ASSURANCE

A. General: Unless otherwise specified herein, quality assurance of all submersible pumps and motors shall be as specified in Section 11300, "Pumps, General."

B. Factory Tests: All submersible pumps and motors shall be factory tested as specified in Section 11300 "Pumps, General" and as specified herein.

1. Hydrostatic Testing: All pumps shall be hydrostatically tested to a minimum pressure of 1.5 times the shut off head of the pump. Each pump and motor shall be tested as one assembled unit and shall show zero leakage.

2. Submersible Motor Leakage Test: The motor shall be leak tested pressure equivalent to 65 feet of water and shall show zero leakage. Test procedures shall be submitted to the ENGINEER for review.

C. Field Tests:

1. General: After installation of the pumping equipment, electrical, instrumentation and control, the CONTRACTOR shall be responsible to make sure that all the works have been checked, and all equipment has been tested in conformance with the drawings and specifications. Field tests shall be conducted in the presence of the ENGINEER, plant operation personnel in three stages.

2. Test No. 1: The CONTRACTOR shall notify the ENGINEER at least two weeks prior to the scheduled test. Each pump shall be operated for a minimum period of 24 hours in air (unsubmerged). In the case of wet pit submersible pump, the wet well level shall be held below the flange of the motor.

3. Test No. 2: Each pump shall be operated for a minimum period of 24 hours with the motor submerged and fully loaded. In the case of the dry pit pump where submerging the motor is not possible, Test No. 2 shall be conducted during the factory test.

4. Test No. 3: The final test shall be conducted for a period of 7 continuous days, 24 hours a day in automatic operation. The pumping plant shall be operated throughout the range of operation simulating the daily variation of flow. In the event that the incoming flow will not be enough to simulate operation of the pumping plant, the CONTRACTOR shall provide a signal generator or other equivalent equipment to simulate the rise and fall of wet well level, and all shutoff and alarm safety devices to demonstrate that the control system was installed to satisfy the design conditions as shown and specified in the Contract Document.

   Upon proper determination by the ENGINEER that the pumping system has operated satisfactorily without major failure, the pumping system shall be recommended for acceptance by the ENGINEER and the INSPECTOR.

1.6 SPARE PARTS

A. The pumps shall be furnished with the following spare parts:

1. One (1) set of mechanical shaft seals for each pump.

2. One (1) set of wearing rings for each pump.

3. One (1) set of bearings for each pump and motor.

4. Three (3) sets of O-rings for each pump.

5. One (1) neoprene submersible cable of required length for the submersible pumps complete with termination kit.

B. All spare parts shall be packed in containers which are clearly identified with indelible markings on the containers.

PART 2 - PRODUCTS

2.1 GENERAL REQUIREMENTS

A. Power Supply: Power supply to equipment will be 480 volts, 60-Hz, 3-phase.

B. Anchor Bolts: All anchor bolts, nuts, and washers shall be Type 316 stainless steel and shall comply with the anchor bolts and expansion anchors section. Anchor bolts shall be accurately located and centered in pipe sleeves having an inside diameter approximately 2-1/2 times the bolt diameter and with a length approximately 8 times the bolt diameter.

C. Painting: All iron and steel parts which will be in contact with pumped liquid or submerged after installation, including the inside of the impeller casing, the impeller, and the discharge elbow, shall be shop cleaned in accordance with the coating manufacturer's recommendations and painted with an epoxy coating system. The coating shall have a dry film thickness of at least 10 mils and shall consist of a prime (first) coat and one or more finish coats. At least one quart of the finish coat shall be furnished with each pump for field touchup painting.

All other iron and steel surfaces, except stainless steel and machined surfaces, shall be shop painted as specified in Section 09800 "Protective Coating."

D. Manufacturers, or Equal: Flygt Corporation (NP Series)**;** or equal.

2.2 PERFORMANCE AND DESIGN REQUIREMENTS

A. Pumping units shall be designed for the following operating conditions and requirements:

1. Unit designation - P-102 and P 103 / P- 101.

2. Location - Pump Station Wet Well (PSWW1).

3. Number of pumping units - 2 High Capacity / 1 Low Capacity.

4. Service - Stormwater.

5. Operation (hours per day) - Intermittent.

6. Capacity (gpm) max - 5,000 / 1,400.
   at design point - 3,000 / 600.
   min - 1,500 / 200.

7. NPSH available at suction (ft) – 30.

8. Pump head (TDH-ft):
   at max gpm - 22 / 8.
   at design point - 46 / 27.
   at min gpm - 63 / 36.

9. Wire-to-water efficiency at design point, min (percent) - 75 / 69.

10. Liquid to be pumped - Stormwater.

11. Specific gravity of liquid - 1.00.

12. Liquid temperature (degrees F)- 65.

13. Max pump speed (rpm) -1800 / 1200.

14. Min motor size (hp) -60 / 11.

15. Depth of wet well (ft) - 24.

16. Water depth in the wet well (ft):
    min - 1.5 .
    max - 7.5.

17. Min discharge outlet size (inches) - 10 / 6.

18. Min test sphere diameter (inches) - 1.

19. Min hydrostatic test pressure (psi) - 1.5 x shutoff head plus suction pressure.

B. Pump performance shall be stable and free from cavitation and noise throughout the specified operating head range at minimum suction submergences. The design running clearance between the impeller inlet and the casing wearing ring (if provided) shall be not less than 0.006-inch or one-half mil per inch of casing wearing ring diameter, whichever is greater.

C. Each pumping unit shall be designed so that reverse rotation at rated head will not cause damage to any component.

2.3 MATERIALS

A. Stator Housing, Oil Chamber Housing, Impeller Casing, Impeller, and Sliding Bracket: Cast iron, ASTM A48.

B. Casing Wearing Ring: Bronze ASTM B62.

C. Bottom Wearing Plate: Cast iron, ASTM A48.

D. Shaft: Alloy steel, or stainless steel.

E. All Wetted Assembly Fasteners: Type 316 stainless steel.

F. Mechanical Seals: Two tandem single type, oil lubricated with tungsten carbide seal rings at all points except the upper rotating seal, which shall be carbon.

G. Discharge Base: Cast iron or fabricated steel.

H. Guide Rails: Type 316 stainless steel.

I. Protective Coating:

All iron and steel parts which will be in contact with pumped liquid or submerged after installation, including the inside of the impeller casing, the impeller, and the discharge elbow, shall be shop cleaned and painted in accordance with ENGINEER approved Manufacturer's standards or with Section 9800 - Protective Coating.

2.4 PUMP CONSTRUCTION

A. Impeller Casing: The impeller casing shall have well-rounded water passages and smooth internal surfaces free from cracks, porosity, blow holes, or other irregularities. The discharge nozzle shall be flanged and sufficiently rigid to support the guide rail-mounted pumping unit under all operating conditions.

B. Impeller: The impeller shall be a semi-open, multi-vane, backswept, nonclog design. The interior water passages shall have uniform sections, smooth surfaces, and free from cracks and porosity. The impeller shall be dynamically balanced and securely locked to the shaft by means of key and self-locking nut.

Balance vanes shall be provided on the impeller back shroud. Running clearances between the vanes and adjacent housing surfaces shall be such as to reduce pump discharge pressure at the lower mechanical seal sufficiently to permit the oil in the oil chamber housing to effectively lubricate the lower seal.

Flygt-supplied pumps: N-Style impeller. Cast Iron material, Class 35B. Dynamically balanced, semi-open, multi-vane, backswept, non-clog design. Impeller vane leading edges shall

mechanically self-clean as they pass a spiral groove located on the volute section. Impeller vanes shall have a screw-shaped leading edge hardened to Rockwell HRc 45.

C. Wearing Rings: Renewable wearing rings shall be securely fastened to the impeller casing front cover to provide either an axial or radial running clearance. As an alternative, the use of an axially adjustable wearing plate arranged to permit adjustment of the axial running clearance between the impeller and plate will also be acceptable. The wearing plate shall have an outward spiraling groove designed to force stringy solids outward and away from the impeller.

D. Oil Chamber Housing: The oil chamber shall contain a moisture sensor, inspection plug, drain plug, and vent plug.

E. Mechanical Seals: Each pump shall be provided with two mechanical rotating seals arranged in tandem and running in an oil chamber. The lower seal unit between the pump and oil chamber shall contain one stationary and one positively driven rotating tungsten carbide ring. The upper seal unit between the oil chamber and stator housing shall contain one stationary tungsten carbide ring and one positively driven rotating carbon ring. Each interface shall be held in contact by an independent spring system designed to withstand maximum suction submergences. The seals shall require neither maintenance nor adjustment and shall be easily inspected and replaceable.

Shaft seals lacking positively driven rotating members or conventional double mechanical seals which utilize a common single or double spring, acting between the upper and lower units and requiring a pressure differential to offset the external pressure and effect sealing, will not be acceptable. The seals shall not rely upon the pumped media for lubrication and shall not be damaged if the pumps are run unsubmerged for extended periods of time.

F. Sealing of Mating Surfaces: All mating surfaces of major components shall be machined and fitted with O-rings where watertight sealing is required. Sealing shall be accomplished by O-ring contact of four surfaces and O-ring compression in two plans without reliance on a specific fastener torque or tension to obtain a watertight joint. The use of elliptical O-rings, gaskets, or seals requiring a specific fastener torque value to obtain and maintain gasket or seal compression and watertightness will not be acceptable. The use of secondary sealing compounds, gasket cement, grease, or other devices to obtain watertight joints will not be acceptable.

G. Discharge Base: A discharge base and discharge elbow shall be furnished by the pump manufacturer for each pumping unit. The base shall be sufficiently rigid to firmly support the guide rails, discharge piping, and pumping unit under all operating conditions. The base shall be provided with one or more integral support legs or pads suitable for bolting to the floor of the wet well. The face of the discharge elbow inlet flange shall be perpendicular to the floor and make contact with the face of the pump discharge nozzle flange. The diameter and drilling of the elbow outlet flange shall conform to ANSI B16.1, Class 125.

The pump and motor assembly shall be automatically connected to and supported by the discharge base and guide rails such that the unit can be removed from the wet well and replaced without the need for operating personnel to enter the wet well.

H. Sliding Bracket: Each pumping unit shall be provided with an integral, self-aligning guide rail sliding bracket. The bracket shall be designed to obtain a wedging action between flange faces as final alignment of the pump occurs in the connected position. The bracket shall maintain proper contact and a suitably sealed connection between flange faces under all operating conditions.

I. Guide Rails: Each pumping unit shall be equipped with no less than two guide rails constructed of Type 316 stainless steel. Guide rails shall be sized to fit the discharge base and the sliding bracket and shall extend upward from the discharge bases to the access hatch cover at the top of the wet well. An upper guide rail bracket shall be provided and shall be Type 316 stainless steel.

J. Lifting Chain or Cable: A chain or cable suitable for removing and installing each pump should be selected and provided by the pump manufacturer. The chain shall be Type 316 stainless steel. A suitable chain hook shall be provided at the top of the wet well.

K. Access Hatch Cover: The access hatch cover shall be provided by the pump manufacturer and as indicated on the Drawings. The cover shall be of all-steel construction with Type 316 stainless steel hardware, and suitable for a live load of H-20 vehicular loading. The cover shall be a double leaf type constructed of structural shapes and reinforced diamond pattern checkered plate. Structural shapes and plates shall have a thickness of not less than 1/4-inch. Each leaf shall be provided with two hinges, torsion bars, or other devices to assist opening, an automatic hold-open arm, retractable handle, and a padlock hasp. Integral hinged safety grating shall be provided beneath each door. The frame shall be provided with strap anchors bolted or welded to the exterior.

Each cover shall be provided with a lifting chain hook, a guide rail support bracket, and a support bracket for the level control float cables.

2.5 BALANCE

A. All rotating parts shall be accurately machined and shall be in as nearly perfect rotational balance as practicable. Excessive vibration shall be sufficient cause for rejection of the equipment. The mass of the unit and its distribution shall be such that resonance at normal operating speeds is avoided. In any case, the vibration displacement (peak-to-peak) as measured at any point on the machine shall not exceed 4.0 mils.

B. At any operating speed, the ratio of rotative speed to the critical speed of a unit or components thereof shall be less than 0.8 or more than 1.3.

2.6 ELECTRIC MOTORS

A. Each pump shall be driven by an explosion proof, totally submersible, electric motor furnished by the pump manufacturer. Each motor shall be rated 460-volt, 60-Hz, 3-phase and shall have a nameplate rating which exceeds the maximum horsepower required by the pump. The stator housing shall be an air-filled, watertight casing. Motor insulation shall be moisture-resistant, Class H, with temperature rise (based on maximum ambient temperature of 40 degrees C) of 80 degrees C measured by the resistance method. Each motor shall be NEMA Design B with 1.00 service factor for continuous duty.

B. The motor bearings shall be antifriction, permanently lubricated type. The lower bearing shall be fixed to carry the pump thrust and the upper bearing free to move axially. The bearings shall have a calculated AFBMA L_{10} Life Rating of 40,000 hours when operating at maximum operating head.

C. Each motor shall be capable of continuous operation in air (unsubmerged) for at least 24 hours under pump full load conditions without exceeding the temperature rise limitations for the motor insulation system.

D. Each motor starting current at full voltage shall not exceed 650 percent of the motor full load circuit.

E. Each pump motor shall be provided with a special cable UL-approved and suitable for submersible pump applications; this shall be indicated by a code or legend permanently embossed on the cable. The cable shall be at least 70 feet in length. Power cable shall be minimum 4 conductor, copper with 600-volt insulation in accordance with NEC requirements size as follows.

1. Pump 101, 11HP Motor - #10 AWG.

2. Pump 102, 60HP Motor - #1 AWG.

3. Pump 103, 60HP Motor - #1 AWG.

F. The cable entry water seal design shall be such that a specific fastener torque is not required to ensure a watertight and submersible seal. The use of epoxies, silicones, or other secondary sealing systems will not be acceptable. The cable entry junction box and motor shall be separated by a stator lead sealing gland or terminal board. The junction box shall isolate the motor interior from moisture gaining access through the top of the stator housing or a separate moisture-sensing device shall be provided in the stator housing.

G. Refer to Section 16490 - Electric Motors for additional applicable requirements.

2.7 CONTROLS

A. Liquid Level Sensors: The pump station wet well is to be provided with float switches complete with cable and stainless steel cable holder. Each pump control switch will consist of two normally open switches, encapsulated in epoxy resin. The float casing will be polypropylene. The switch cable will be Type SO UL-approved neoprene jacket 4 #12 conductor, AWG, copper, 41-strand, 600-volt insulation, and shall not be less than 70 feet in length. Each pump shall automatically start and stop at water levels as indicated in Section 17400, Attachment A. The cable will be secured to the support rod with a polypropylene composition clamp with stainless steel blocks. Provide intrinsically safe level sensor system, as the motor specified is explosion proof.

B. Pump Controls: See Section 17400 - Process Instrumentation and Control.

PART 3 - EXECUTION

3.1 GENERAL

A. Each discharge base shall be leveled, plumbed, aligned, and wedged into position to fit connecting piping. Installation procedures shall be as recommended by the pump manufacturer and the Hydraulic Institute Standards. Grouting shall be as specified in Section 03315 - Grout.

END OF SECTION

SECTION 11820
SLIDE GATES

PART 1 - GENERAL

1.1 THE REQUIREMENT

A. The CONTRACTOR shall furnish and install all sluice in the locations shown, complete and operable including manual or electric operators, frames, wall thimbles, bracing, mountings, coatings, etc., in accordance with the requirements of the Contract Documents.

1.2 RELATED WORK SPECIFIED ELSEWHERE

A. Section 11000 - Equipment General Provisions.

1.3 REFERENCE SPECIFICATIONS, CODES AND STANDARDS

A. Comply with the applicable reference specifications as specified in the GENERAL REQUIREMENTS.

1.4 CONTRACTOR SUBMITTALS

A. Submittals shall be made in accordance with the GENERAL REQUIREMENTS.

B. Submit complete shop drawing with the table of material.

C. Submit installation diagrams showing location, arrangement, and size of all fasteners required for the equipment.

D. Upon completion of installation, submit (1) electronic copy of the Operation and Maintenance Manual for this equipment.

1.5 QUALITY ASSURANCE

A. Comply with Section 11000 - Equipment General Provisions.

B. The leakage allowance for sluice gates only shall not exceed 0.1 gpm/ft. of seating perimeter under 20 ft. of seating head, and 0.2 gpm/ft. under 20 ft. of unseating head, to meet ANSI/AWWA C-501.

PART 2 - PRODUCTS

2.1 SLUICE GATES

A. General: All gates shall be new and of current manufacture and conform to latest version of AWWAC560. They shall be adequately braced to prevent warping and bending under the intended usage. Sluice gates shall be furnished with a crank-operated and/or electrically operated floor stand, having a 2:1 gear ratio, or 2-inch square operating nut, as shown, and shall conform to ANSI/AWWA C501, except as otherwise specified herein.

B. Coating: Each gate together with wall thimble and all accessories shall be epoxy-coated as specified in Section 09800 - Protective Coating. Care shall be exercised to protect all machined surfaces during sandblasting and coating.

C. Frames and Slides: Gate frames and slides shall be of cast iron. All gate assemblies shall be shop tested and certified by the manufacturer to meet the maximum heads shown. Slides and frames shall have well-machined seating faces, and the maximum clearance between seating surfaces, with the slide in the closed position shall be 0.004-inches. Sufficient adjustable wedging shall be provided to insure a practical water-tightness, as specified in ANSI/AWWA C-501. Seating faces shall be of Naval bronze, to ASTM B21 and fasteners, anchor bolts, studs, and adjusting screws shall be of Type 316 stainless steel conforming to ASTM A 276, or as otherwise approved. Operating nuts shall be of bronze conforming to ASTM B 584.

D. Stems: Stems shall be of Type 316stainless steel conforming to ASTM A 276 and shall be provided with adjustable bronze bushed stem guides to ensure that the L/R ratio of the stem does not exceed 200.

E. Operating Mechanism: Operators shall be weatherproof, equipped with stem covers, and shall be mounted on cast-iron or fabricated steel pedestals. The pedestal shall have an ample base or bracket area to evenly distribute the load to the supporting concrete structure. The center line of the manual operator shall be approximately 3-feet above the base of the pedestal. Sluice gate hoist heads shall be cast iron. The operating nut shall be of solid bronze, ASTM B 584. Operating thrust shall be taken on roller or ball bearings. All parts shall be provided with an alternate lubrication system. The unit shall be designed so that a maximum of 40 lb effort on the crank will operate the gate. Clockwise movement of the handwheel shall close the gate. The operating crank shall be easily removable to facilitate the use of a portable power operator.

F. Wall Thimbles: Unless otherwise shown, all sluice gates shall be furnished and installed with cast iron, F-pattern, wall thimbles to match the thickness of the walls in which they are installed. These thimbles shall be supplied by the manufacturer of the gates, and they shall fit the bolt dimensions of the gates. All studs shall be of Type 316 stainless steel.

G. Sealant: The elastomeric sealant shall be:

1. Rubber Caulk Sealer by Products Research Co., LA.

2. Or equal.

H. Grout: Gates mounted against concrete walls without wall thimbles shall be installed with one inch of non-shrink grout between the wall and the gate flange. The anchor bolts and nuts shall be of Type 316 stainless steel.

I. Manufacturers:

1. Hydro Gate.

2. Whipps.

3. Fontaine.

4. Or Equal.

PART 3 - EXECUTION

3.1 INSTALLATION

A. Sluice gates shall be installed in strict accordance with the manufacturer's printed recommendations and the requirements herein. Operators shall be located to avoid interference with handrails and structural members.

B. Just prior to setting each gate, a 1/8-inch thick layer of mastic grade polysulfide elastomeric sealant shall be applied to the back of the gate frame. After setting the gate, the nuts shall be run down on the anchor bolts just far enough to make them snug and to cause the rubber sealant to begin to ooze out, but not far enough to produce any significant stress to the frame. Any excess sealant at the edges shall be removed. The sealant shall be allowed to cure for at least 7 days, after which the anchor bolt nuts shall be tightened to their final positions. If gaskets are being used, they shall be installed over the studs in one piece, or dovetailed and cemented with a liquid-type gasket material.

C. All damage to surface coatings incurred during shipment and/or installation shall be repaired to the satisfaction of the ENGINEER prior to installation.

END OF SECTION

THIS PAGE INTENTIONALLY LEFT BLANK

SECTION 13470
TEMPORARY ODOR CONTROL SYSTEMS

PART 1 - GENERAL

1.1 THE REQUIREMENT

A. The CONTRACTOR shall furnish all labor, materials, and equipment required to effectively control all odor releases from the affected sewers within the project limits for the duration of the Work. An odor release shall be as defined herein. The CONTRACTOR shall furnish an Odor Control System appropriate for the method of rehabilitation.

B. The CONTRACTOR must continuously control and treat foul air discharges from the affected sewers within the project limits for the duration of the Work. The control of foul air shall be accomplished through the implementation of an approved Odor Control System utilizing the withdrawal and scrubbing of foul air to maintain a negative air pressure in the affected sewers and through a coordinated system of chemical injection to the sewage flowing within the affected sewers.

C. Diversion of untreated foul air from within the project limits to other parts of the same sewer or to any other sewer shall not be allowed. Restriction or blockage of foul air in the affected sewers upstream of the project limits that results in the release of untreated foul air from the affected sewers or other interconnecting sewers shall not be allowed. Release of untreated foul air from access pits or other temporary construction openings on the affected sewers shall not be allowed.

D. If tests indicate that the Odor Control System is not achieving the required treatment levels, or that foul air is escaping from the affected sewer system, or on-going odors are creating a nuisance to the surrounding community, or if the CONTRACTOR fails to provide an independent Industrial Hygienist or process engineer to carry out the required monitoring, the INSPECTOR has the right to stop work and require the CONTRACTOR to close any open pits or other sewer or temporary construction openings until the CONTRACTOR has performed all necessary measures to verify that the odor control system is operating properly. If the CONTRACTOR has performed all necessary measures but can still not meet the odor control requirements, the CONTRACTOR must immediately notify the ENGINEER. The CONTRACTOR will not be entitled to any time extension or additional cost for work stoppages due to failure of the Odor Control System. The City reserves the right to stop construction work if odor complaints occur and/or if the odor control system is not operating properly.

E. The CONTRACTOR shall provide all necessary materials, equipment, and labor for mobilization, installation, relocation, connection, start-up, testing, optimization, operation, monitoring and reporting, maintenance, testing and de-mobilization required for the proper operation of the odor control systems for the duration of the Work. These efforts shall include, but not be limited to site work, grading, installation, temporary connections, temporary utilities, removal, relocation, utility connection, utility disconnection, clean up, and site restoration.

F. The CONTRACTOR shall coordinate all work related to set-up, operation, and demolition of the Odor Control System(s) with the overall schedule and phasing of the Work. Temporary connections for the Odor Control Systems, to the affected sewers and temporary air curtains, if utilized, shall be located and relocated as necessary to provide sufficient ventilation, maintain negative pressure in the affected sewers, and accommodate the phasing of the overall Work. Temporary connections to the affected

sewers for chemical injection, if used, shall be located and relocated as necessary to: provide sufficient odor suppression in the affected sewers at the location of any openings and to accommodate the phasing of the overall Work. The CONTRACTOR shall notify the ENGINEER and the INSPECTOR at least 48 hours in advance of any activities that may cause a release of odor.

G. The CONTRACTOR shall provide the services of an experienced process engineer to supervise the installation, maintenance, operation, relocation, optimization, monitoring/sampling and removal of Odor Control Systems as required for this project. The process engineer shall prepare, sign and stamp the Odor Control Plan for the project. The process engineer shall be responsible for locating the scrubber systems, installing and adjusting temporary air curtains to direct airflows, sealing openings to prevent short circuiting, directing airflows in the affected sewers to maintain proper ventilation and the primary odor control objective of a negative air pressure in the affected sewers at all times. The process engineer shall be responsible for locating the chemical injection unit(s) as required, installation of piping, and installation of sensors and monitoring equipment. The process engineer shall be responsible for overall coordination and operation of all components of the odor control system. The process engineer shall be registered as a Professional Engineer in the State of California and shall have a minimum of 5 years experience in the design and operation of odor control systems.

H. Industrial Hygienist:

1. The CONTRACTOR shall provide the services of an independent Industrial Hygienist experienced in air monitoring and certified by the American Board of Industrial Hygiene. The Industrial Hygienist shall be responsible for overseeing all odor monitoring performed on site and for preparing and signing the monthly operational reports. The CONTRACTOR shall submit the credentials of the Industrial Hygienist for the Engineer's review and approval before commencing any work requiring odor control.

2. The ENGINEER reserves the right to rescind the approval of the Industrial Hygienist. If the Industrial Hygienist's approval is rescinded, the CONTRACTOR shall submit for the Engineer's review and approval the credentials of another independent Industrial Hygienist experienced in air monitoring and certified by the American Board of Industrial Hygiene to be hired as the air monitoring consultant. The CONTRACTOR shall not receive any compensation for equipment, labor, overhead, or material costs resulting from any work delays due to the time necessary to replace the Industrial Hygienist.

1.2 REFERENCE SPECIFICATIONS, CODES AND STANDARDS

A. ASTM D2854 - Standard Test Method for Apparent Density of Activated Carbon.

B. ASTM D2866 - Standard Test Method for Total Ash Content of Activated Carbon.

C. ASTM D2867 - Standard Test Methods for Moisture in Activated Carbon.

D. ATSM D3802 - Standard Test Method for Ball-Pan Hardness of Activated Carbon.

E. ASTM D5504 - Standard Test Method for Determination of Sulfur Compounds in Natural Gas and Gaseous Fuels by Gas Chromatography and Chemiluminescence.

F. ATSM D5742 - Standard Test Method for Determination of Butane Activity of Activated Carbon.

G. ASTM E544 - Standard Practices for Referencing Suprathreshold Odor Intensity.

H. ASTM E679 - Standard Practice for Determination of Odor and Taste Thresholds By a Forced-Choice Ascending Concentration Series Method of Limits.

I. EN13725 - Air quality. Determination of odor concentration by dynamic olfactometry.

1.3 ODOR CONTROL PERFORMANCE REQUIREMENTS

A. Ambient conditions (without forced ventilation, opening of the sewer to atmosphere or hydrogen peroxide or other chemical feed) in the Work area are projected to be:

Sewer Reach	Wastewater Flow (cfs)	Total Dissolved Sulfide - Liquid Phase (mg/l)	Average Hydrogen Sulfide -Vapor Phase (ppm)	Peak Hydrogen Sulfide - Vapor Phase (ppm)
7th Street from Grand View to Lake Street	67 - max Q	UNK	UNK	UNK

B. Unless noted otherwise, the above data shall be construed to be averages and the CONTRACTOR shall be responsible for the design and operation of a system to meet the above criteria with a minimum peaking factor of 3.0.

C. The CONTRACTOR shall be responsible for the design and operation of the odor control system (combination of chemical feed and vapor phase treatment) to provide the level of treatment specified herein and meet the limits specified below.

D. The CONTRACTOR shall be responsible for obtaining and maintaining all necessary permits for operation of the odor control system from all necessary and related agencies and the South Coast Air Quality Management District (SCAQMD). Any sampling required for all permits and for the SCAQMD shall be the responsibility of the CONTRACTOR.

E. Limits of Air Concentrations:

Ambient hydrogen sulfide (H_2S) concentrations in the surrounding atmosphere shall not exceed the following limits as measured by a properly calibrated and certified Hydrogen Sulfide gas analyzer, minimum detection limit 0.01 ppm or less:

1. Hydrogen sulfide concentrations shall not exceed any of the following:

    a. 10 parts per billion (ppb) at any property lines adjacent to any open access pit.
    b. 100 parts per billion (ppb) at the scrubber stack discharge.

2. VOC testing shall at a minimum meet rule 1176 as set forth by the South Coast Air Quality Management District.

3. Total odor testing results shall not exceed:

   a. 100 D/t (Dilution to Threshold) above background at scrubber stack discharge.

4. Total reduced sulfur compound concentrations at the scrubber stack discharge shall not exceed 0.5 ppm(v) per ASTM D5504 (sum of all reduced sulfur compounds detected).

F. Limits of Liquid Phase Concentrations:

1. Hydrogen peroxide chemical feed shall be used to control dissolved sulfide in the wastewater within the Work area and downstream of the chemical feed facility.

2. Alternatively, magnesium hydroxide slurry (i.e. 58 to 63 wt% Thioguard or equal) or calcium hydroxide slurry (i.e. 43 to 47 wt% Alkagen or equal) may be used to control dissolved sulfide in the wastewater within the Work area and downstream of the chemical feed facility where flow velocities at the injection point are at least 3 ft/sec. Minimum dosing shall be 20 gallons per MGD of flow being treated.

3. Dissolved sulfide concentrations in the wastewater shall be maintained at 0.5 mg/l or less at the open trench work area.

4. Appropriate Los Angeles City Fire Department permit and enclosure requirements shall be secured and provided by the Contractor, as applicable.

G. Testing Methods:

1. Exhaust and property boundary hydrogen sulfide concentrations shall be determined by grab sampling with a factory calibrated Hydrogen Sulfide Analyzer, such as: a Jerome 631X hydrogen sulfide analyzer, low range (0.01-2 ppm) Odalog, or equivalent, as approved by the ENGINEER.

2. Total odor testing for detection threshold and recognition threshold shall be in accordance with ASTM E679-04 and EN13725.

3. VOC testing as required to meet agency and AQMD permit requirements. VOC shall be monitored with a handheld VOC monitor, such as a MiniRAE 3000.

4. Reduced sulfur testing shall be in accordance with ASTM D5504.

5. Liquid dissolved sulfide concentrations shall be determined by taking liquid grab samples and analyzing with either LaMotte or Hach Sulfide Test kit, or the equivalent. If another method for sampling is planned, it shall be submitted for approval.

6. Inlet H_2S and VOC concentrations entering carbon scrubber inlet and/or sewer headspace using 0-200 ppm odalog or handheld H2S monitoring device and handheld monitor, such as MiniRAE 3000 VOC.

1.4 SUBMITTALS

A. The CONTRACTOR shall prepare a written Odor Control Plan for submittal to the ENGINEER. Design of odor control facilities shall take account of the potential for varying weather conditions. The Odor Control Plan shall include:

1. Number, capacity, power source and location of all proposed scrubbers during each phase of the work. Scrubbers shall be located in the areas shown and at the locations reflected in the Submittal.

   Additional submittals:

   a. Identification of local sewer for discharge line from odor scrubber unit. Schematic of drain line from odor control unit to local sewer.
   b. Plan layout of odor control units showing the temporary emergency shower and eyewash with a potable water supply which meets OSHA requirements.
   c. Spill response measures and spill response plan.
   d. Start up procedures, operational procedures, and procedures for emergency shutdown and restart.
   e. Method to seal open pits.
   f. Power and water supply for odor control units.
   g. Procedures for filling, clearing, cleaning odor control units. Procedures for containing, transporting, and disposing of used media.
   h. Procedures for monitoring and sampling.
   i. Sample data collection sheets for odor control units.
   j. Plan for relocating carbon scrubber locations, if required.
   k. Plan for relocating chemical feed discharge locations, if required.

2. Number and location of all chemical injection facilities utilized during each phase of the work, proposed dosage rates and expected detention times at each phase of work and at varying wastewater flow rates.

3. Temporary utilities, site work, easements, loading and offloading areas for each separate facility and location.

4. Construction details and locations of any proposed temporary air curtains to direct scrubber airflows and provide ventilation for manned-entry workers (manned-entry rehabilitation only).

5. Technical data for each piece of equipment including scrubbers, fans, blowers, pumps, tanks, and testing equipment, metering, monitoring systems for meters, etc.

6. Data sheets for all carbon media indicating where it will be used and how media changes will be accomplished, and

7. Data sheets and MSDS sheets for activated carbon.

8. Data sheets and MSDS sheets for all proposed chemical feeds.

9. Certification that a safety plan has been developed for the chemicals on site, which complies with all applicable local, State and Federal regulations and proper training of staff has been completed.

10. Startup and testing report.

B. The CONTRACTOR shall prepare a monthly Odor Control Report for submittal to the ENGINEER. The Odor Control Report shall be signed and certified by the independent Industrial Hygienist (See Section 1.1, G) experienced in air monitoring and certified by the American Board of Industrial Hygiene. The Odor Control Report shall be submitted no later than 5 working days following the end of the reporting month. The Odor Control Report shall include:

1. Daily Hydrogen Sulfide, D/T and (where required under the applicable AQMD permit) VOC test results for each scrubber installed under the Contract.

2. Daily readings for mist eliminator differential pressure and scrubber air flow (cfm) for each scrubber installed under the Contract.

3. Daily chemical dosing records for each chemical dosing and feed system installed under the Contract.

4. All monitoring results as required by Section 1.3 E. and G.

5. Daily scrubber operation and flow rate (cfm), dates and hours of shutdown due to maintenance, carbon change out or other.

6. Carbon scrubber change out dates and pounds of carbon delivered.

7. Listing of odor complaints filed due to construction activities, including date, time, location, who and action taken.

8. Daily chemical feed rates and usage.

1.5 HEALTH AND SAFETY

A. The CONTRACTOR is required to comply with all applicable local, State and Federal regulations, MSDS, including all industry standards and practices for protection of workers from exposure to potentially harmful levels of hydrogen sulfide and other compounds typically present in municipal wastewater collection systems. CONTRACTOR shall specifically comply with Cal OSHA Confined Space and Tunnel Safety Orders that may apply to sewers and manned entry.

B. Hydrogen peroxide is a strong oxidant and requires specific safety precautions for storage and handling. The CONTRACTOR shall comply with all local, State and Federal regulations, including local fire codes, MSDS, industrial hygiene and safety guidelines for the handling of oxidants. The CONTRACTOR shall obtain a permit for the system from the Los Angeles Fire Department and provide the appropriate enclosure as required. Contractor is cautioned that enclosure requirements may necessitate Contractor to modify traffic control plan, and/or laydown area. Contractor shall plan accordingly.

C. Magnesium Hydroxide slurry, Calcium Hydroxide slurry, and all other approved chemical feeds require various levels of safety precautions for storage and handling. The CONTRACTOR shall comply with all local, State and Federal regulations, including local fire codes, MSDS, industrial hygiene and associated safety guidelines.

D. The CONTRACTOR shall obtain a permit for the system from the Los Angeles Fire Department, as applicable, and provide the appropriate enclosure as required.

1.6 ENVIRONMENTAL

A. The CONTRACTOR is required to comply with all applicable local, State and Federal regulations regarding the discharge of odorous air and odor causing compounds into the atmosphere. The CONTRACTOR shall acquire all necessary permits relating to discharge of odorous air to the environment and be responsible for meeting permit requirements.

B. The CONTRACTOR shall properly dispose of condensate, drainage, spills, chemicals and washdown liquids associated with operation of the odor control systems.

PART 2 - MATERIALS

2.1 GENERAL

A. The CONTRACTOR shall provide Odor Control Units (activated carbon scrubbers and/or approved liquid phase chemical storage and feed systems) at each of the following locations:

Sewer Reach	Type
48-inch RCP sewer on 7th Street between Lake Street and Grand View Street	Activated Carbon Scrubber Unit

The CITY does not guarantee that the equipment and locations above will meet all of the specification requirements.

B. Each Odor Control Unit shall be located at the location shown on the Contract Drawings or at an alternate location proposed by the CONTRACTOR and approved by the ENGINEER. The ENGINEER shall not be obligated to approve any alternate location proposed by the CONTRACTOR. It may be necessary for operational needs to relocate units.

C. Each Odor Control Unit shall remain in place until rehabilitation of the relevant sewer is complete.

D. The CONTRACTOR shall be responsible for supplying components (odor control units and chemical feed systems) that are compatible with the expected conditions (treatment of humid, odorous air from sewer headspace) and proposed chemical (hydrogen peroxide, etc.). Any components that break or become inoperable during the project period shall be replaced or repaired with no additional cost.

2.2 CARBON SCRUBBERS

A. Each carbon scrubber used for non man entry size sewer shall be sized for a minimum of 2,000 cfm, minimum 3 second retention time and minimum 3 ft bed depth in a single or dual-bed configuration. Maximum velocity of air through the carbon bed shall be 60 fpm.

B. Each carbon scrubber used for manned-entry shall be sized to comply with specific Cal/OSHA Tunnel Safety Orders or a minimum of 2,000 cfm minimum 3 second retention time and minimum 3 ft bed depth, in a single or dual-bed configuration. Maximum velocity of air through the carbon bed shall be 60 fpm.

C. Vessels shall be manufactured of FRP, HDPE, stainless steel or ASTM A-36 structural steel, ASTM A569 carbon steel 10 GA sides, bulkhead, and tailgate, 3/16-inch thick floor, FRP grating and polypropylene netting. All interior and exterior surfaces of steel vessels shall be prepared to SSPC-SP-6 specifications. Vessels shall be designed to withstand a maximum loading of 3 psi positive and negative (i.e. vacuum) pressure. Vessels shall include one (1) inlet sample port prior to the carbon vessel, one (1) sample port on the discharge stack and one (1) or more manways. Vessels shall be provided with a minimum 2-inch PVC drain line with ball valve. The drain shall be routed to drain back to the sewer. Vessels shall have removal access ports allowing carbon removal and replacement without disconnecting the exhaust ductwork.

D. The air entering each carbon scrubber shall pass through a grease filter/mist eliminator to remove entrained mists, aerosols and particulates from the foul air stream. At the design gas flow rate, the mist eliminator shall remove a minimum of 99.9% of droplets 10 microns and larger and a minimum of 90% of droplets between 5 microns and 10 microns. The mist eliminator and its components shall be constructed of the same construction resistant materials as the carbon scrubber. The mist eliminator shall be equipped with a minimum 1.5-inch PVC drain pipe with a P-Trap and ball valve. The drain shall be routed through P-Trap configured to continuously drain water from the vessel (valve always open), without allowing pressurized air to escape. The mist eliminator shall not accumulate standing water. The drain shall be routed to drain back to the sewer.

E. Each carbon scrubber shall be equipped with the following pressure gauges:

1. A differential pressure gauge for indicating the pressure differential across the mist eliminator. The differential pressure gauge shall be suitable for combustible gasses. Pressure Gauges shall be liquid-filled. The gauges shall have a minimum dial size of 3-1/2-inches. The gauge faces shall indicate units of measurement and the normal operating reading shall be near the midpoint of the range. Each gauge shall be provided with a diaphragm seal constructed of materials which are completely resistant to corrosion by the chemicals referred to in this Section. Each pressure gauge shall also be provided with an isolation valve. Isolation valves shall be PVC with seals that are resistant to the chemical applications. Manufacturer: Dwyer Series 2000 Differential Pressure gauge, or equal.

2. A pressure gauge for indicating the inlet pressure to the scrubber. The pressure gauge shall be suitable for combustible gasses. Pressure Gauges shall be liquid-filled. The gauges shall have a minimum dial size of 2½ inches. The gauge faces shall indicate units of measurement and the normal operating reading shall be near the midpoint of the range. Each gauge shall be provided with a diaphragm seal constructed of materials which are completely resistant to corrosion by the chemicals referred to in this Section. Each pressure gauge shall also be provided with an isolation valve. Isolation valves shall be PVC with seals that are resistant to the chemical applications. Manufacturer: Ashcroft Duragauge Model 1279, or equal.

F. Each carbon scrubber used for non-manned entry shall include a corrosion resistant fan or blower rated for a minimum 2,000 cfm at the total combined static pressure through the carbon scrubber, duct, carbon media, mist eliminator and stack. Fans shall be capable of speed adjustment using belts and sheaves to provide for an operating range of + or – 500 cfm from the airflow rate noted above. Fans shall be enclosed inside noise reduction housings specifically engineered and constructed for the purpose.

A minimum 1.5-inch PVC drain pipe with a threaded drain plug shall be provided at the low point of the fan housing.

G. Each carbon scrubber used for manned entry shall be sized to comply with specific Cal OSHA Tunnel Safety Orders based upon CONTRACTOR'S rehabilitation process or a minimum 2,000 cfm, whichever is greater. Each scrubber shall include a corrosion resistant fan or blower rated for minimum 1,000 cfm greater than the calculated carbon scrubber size at the total combined static pressure through the carbon scrubber, duct, mist eliminator and stack. Fans shall be capable of speed adjustment using belts and sheaves to provide for an operating range of not less than +/- 1,000 cfm from the design setpoint. Fans shall be enclosed inside noise reduction housings specifically engineered and constructed for the purpose.

H. Ducted fan noise shall not cause noise levels measured at the property line of any sensitive receiver to exceed by more than 5 dB the ambient noise level as defined in the city Noise Ordinance, or to exceed 75 dB, whichever is lower. Equipment installed outside the boundaries of the CITY shall also conform to the noise regulations of the municipality in which it is installed. A sound attenuation package shall be provided for each system. The CONTRACTOR shall be responsible for proper sizing of the package, as well as ensuring the entire odor control system does not exceed the noise requirement and that proper operating conditions are maintained for each component as required by the Manufacturer.

I. A discharge stack shall be included with a discharge height at least 15 feet above grade. Velocity of discharge stack shall not be less than 2,000 fpm and not greater than 3,500 fpm. If scrubber is located adjacent to 2-story structures, then the stack shall extend above the roofline.

J. Carbon media shall be granular or pelletized virgin activated carbon. ENGINEER will review requests for other types of carbon in accordance with 1.4 Submittals. Caustic or chemical impregnated carbon media subject to bed fires shall not be used.

K. Furnish sufficient activated carbon to fill the reactor bed inside the vessel to the full height of the bed. The activated carbon shall be suitable for the vapor phase adsorption of sewage treatment odors. Provide minimum 3 ft deep carbon bed, comprised of min. 0-3 ft of Type A carbon and/or min. 0-3 ft of Type B carbon.

L. Type A carbon media shall comply with the following minimum requirements:

1.	Minimum Butane Activity (weight %) per ASTM D5742	26
2.	Maximum Moisture per ASTM D2867 (weight % as packed)	4
3.	Minimum Hardness Number per ATSM D3802	97
4.	Minimum Apparent Density (g/ml) per ASTM D2854	0.4
5.	Maximum Ash Content (% per ASTM D2866)	4

6. Minimum H_2S Breakthrough Capacity*
(g H_2S removed per ml Carbon) 0.2

7. Minimum H_2S Removal Capacity
(lb H_2S removed per cubic foot Carbon) 16.8

* The determination of H_2S breakthrough capacity will be made by passing a moist (85 percent R.H.) air stream containing one percent H_2S at a rate of 1,450 cc/min through a 0.725-inch diameter by 6-inch-deep bed of uniformly packed activated carbon and monitored to 50 ppm breakthrough. Results are expressed in pounds of H_2S removed per cubic foot of carbon.

M. Type B carbon media shall be a virgin coconut shell carbon and shall comply with the following minimum requirements:

1. Minimum Carbon Tetrachloride Activity (weight %)
per ATSM D3467 60

2. Minimum Iodine Number per ASTM D4607, (mg/g) 1,100

3. Maximum Moisture per ASTM D2867
(weight % as packed) 5

4. Minimum Hardness Number per ATSM D3802 95

5. Minimum Apparent Density (g/ml) per ASTM D2854 0.44

6. Maximum Total Surface Area (N2-BET method),
(m2/gm) 1150

7. Minimum H_2S Breakthrough Capacity*
(g H_2S removed per cc of Carbon g/cc) Per ASTM 6646 0.04

* The determination of H_2S breakthrough capacity will be made by passing a moist (85 percent R.H.) air stream containing one percent H_2S at a rate of 1,450 cc/min through a 0.725-inch diameter by 6-inch deep bed of uniformly packed activated carbon and monitored to 50 ppm breakthrough. Results are expressed in grams H_2S removed per cc of carbon(g/cc).

PART 3 - EXECUTION

3.1 GENERAL

A. The CONTRACTOR shall install, start up, and test all odor control equipment prior to opening any access pit or carrying out any other activity that might result in release of odor. The CONTRACTOR shall submit the startup and testing report to ENGINEER. The CONTRACTOR shall not carry out any activity that might result in the release of odor until the startup and testing report has been approved by the ENGINEER.

B. The CONTRACTOR shall provide and install all necessary temporary utilities, air curtains and temporary duct connections prior to startup of any odor control equipment. 120V, 60 Hz power may be the only electrical service available at some or all sites. CONTRACTOR is responsible for temporary power availability, backup power, generators and other electrical equipment required to comply with these specifications and to be supplied as part of the Work.

C. The CONTRACTOR shall close all access pits and all manholes after the completion of construction activities each day. No pits or manholes shall be left open overnight on weekends, holidays or other periods during which no rehabilitation work is taking place. Pits and manholes shall be sealed to the satisfaction of the INSPECTOR to ensure that no fugitive odor emissions will be released.

D. The CONTRACTOR shall replace the carbon media in any scrubber when the media is approaching breakthrough at the stack, or the exhaust stack readings indicate that the media is no longer meeting the discharge requirements, or lastly, if on-going odor complaints are occurring.

E. The CONTRACTOR shall operate all activated carbon scrubbers and chemical feed equipment continuously during any time periods where any odors may be open to the environment. If the activated carbon scrubbers and chemical feed equipment are shut down for any reason including media replacement, equipment maintenance or equipment relocation, normal work operations shall be suspended until all activated carbon scrubbers and chemical feed equipment are operational again. CONTRACTOR shall ensure that the activated carbon scrubbers and chemical feed equipment are operating properly at least 30 minutes prior to the start of the first shift each workday. The Contractor shall report date, time, period of shutdown, and reason.

3.2 STARTUP TESTING

A. The CONTRACTOR shall continuously operate all activated carbon scrubbers and the chemical feed facilities for 48 hours prior to any performance testing.

B. A representative of the Activated Carbon Scrubber supplier shall visit the site to review and verify proper installation of all equipment and verify proper mechanical operation of all fans, motors and auxiliary equipment and assist the CONTRACTOR in startup of the Activated Carbon Scrubber. The CONTRACTOR shall permit the INSPECTOR to attend any on-site operations training provided by the Activated Scrubber Supplier.

C. A representative of the chemical dosing equipment shall visit the site to review and verify proper installation of all equipment, including feed rate adjustment of the chemical dosing equipment and perform safety training.

D. The CONTRACTOR shall monitor the inlet and outlet of each scrubber continuously for a 1-week period of time (minimum 10-minute sampling interval) for hydrogen sulfide. Inlet concentrations shall be monitored using a 0-200 ppm Odalog. Outlet concentrations shall be monitored using either a Jerome 631X with data logger or a 0.01-2ppm Low Range Odalog. In addition to the H_2S monitoring, the inlet and outlet of each carbon adsorber shall be sampled two (2) times in the course of a single day. Each grab sample shall be analyzed for VOCs using handheld VOC monitor (i.e., MiniRAE 3000), reduced sulfur speciation and D/T per the methods listed above. In addition, two (2) grab samples of the ambient air near and downwind of the work area shall be analyzed for D/T. Follow all laboratory procedures for collection, handling and analysis of these samples. No two samples from a single site and location shall be collected less than 2 hours apart.

E. The CONTRACTOR shall verify with a digital or analog manometer that a negative pressure is being maintained inside the sewer at all times when the scrubbers are operating.

F. The CONTRACTOR shall collect liquid grab samples for a 1-week period from the manhole within the work area nearest to the chemical addition point. For hydrogen peroxide, liquid grab sample should be taken downstream of the chemical injection point, 30 minutes after the time of injection. For magnesium hydroxide and calcium hydroxide, shorter reaction time is generally required - consult with product supplier. 4 samples per day shall be collected in two (2) separate groups with not less than 10 minutes between samples and 4 hours between groups. LaMotte or Hach Sulfide test kit or equivalent shall be used for field analysis of the grab sample.

G. The CONTRACTOR shall summarize all test results in a tabular format including the time, date, location and results of each individual sample to be included in the startup report. CONTRACTOR shall submit a copy of the test results to the ENGINEER for review.

H. The ENGINEER reserves the right to conduct independent testing of the odor control equipment during startup in addition to testing performed by the CONTRACTOR.

I. The CONTRACTOR shall not proceed with any construction activities that require opening of the sewer to atmosphere until the ENGINEER has reviewed the startup test results and returned the results to the CONTRACTOR with no objections noted or no exceptions taken. The only exception is that installation of the temporary odor control duct and condensate drain connections may proceed prior to testing.

3.3 MONITORING

A. The CONTRACTOR shall monitor daily H_2S in the discharge stack of each scrubber (as specified under startup testing above) at all times when the scrubber is in operation. For each open access pit, the CONTRACTOR shall daily monitor an entry location at the perimeter of the work zone at all times when the access pit is open. The ENGINEER will confirm the monitoring location for each open access pit.

B. The CONTRACTOR shall use a digital or analog manometer to measure, record and ensure that a negative pressure (with respect to atmospheric pressure) is being maintained in the current work location once each shift.

C. The CONTRACTOR shall collect one (1) liquid grab sample per week from the current work location for analysis of dissolved sulfide.

D. The CONTRACTOR shall collect one (1) air grab sample per week at each active odor scrubber for analysis of total reduced sulfur compounds.

E. Any additional testing required by the AQMD permit shall be conducted by the CONTRACTOR at no additional cost to the CITY.

F. The CONTRACTOR shall keep a logbook on the Work site to record the grab sample data and periodic monitoring data, carbon change out dates, scrubber and chemical injection periods, and shall submit a copy to the INSPECTOR on a daily basis.

G. The CONTRACTOR shall submit monthly reports of the test results as described in the Submittals section of this Specification.

H. If any testing performed by the CONTRACTOR, the CITY or any regulatory authority indicates a failure to meet the specified performance requirements, the CONTRACTOR shall shut down all construction activities and close all pits and manholes until all necessary corrective actions are taken. Any extra cost incurred shall be borne by the CONTRACTOR.

3.4 STANDBY EQUIPMENT

A. CONTRACTOR shall maintain sufficient inventory of new activated carbon media on site to provide complete change of media in one (1) activated carbon scrubber.

3.5 WASTE DISPOSAL

A. The CONTRACTOR shall obtain all applicable permits and authorizations for the disposal of used carbon media from the activated carbon scrubbers. The CONTRACTOR shall properly dispose of all used carbon media from the carbon media filters at no additional cost to the CITY. The CONTRACTOR shall provide copies of disposal receipts from a State-approved disposal site for the disposal of used carbon media.

END OF SECTION

THIS PAGE INTENTIONALLY LEFT BLANK

SECTION 15050
BASIC MECHANICAL MATERIALS AND METHODS

PART 1 - GENERAL

1.1 RELATED DOCUMENTS

A. Drawings and general provisions of Contract, including General and Supplementary Conditions and Division 1 Specification Sections, apply to this Section.

1.2 SUMMARY

A. This Section includes the following basic mechanical materials and methods to complement other Division 15 Sections.

1. Piping materials and installation instructions common to most piping systems.
2. Concrete equipment base construction requirements.
3. Equipment nameplate data requirements.
4. Field-fabricated metal and wood equipment supports.
5. Installation requirements common to equipment specification sections.
6. Cutting and patching.
7. Touch-up painting and finishing.

B. Pipe and pipe fitting materials are specified in piping system Sections.

1.3 DEFINITIONS

A. Pipe, pipe fittings, and piping include tube, tube fittings, and tubing.

B. Finished Spaces: Spaces other than mechanical and electrical equipment rooms, furred spaces, pipe and duct shafts, unheated spaces immediately below the roof, spaces above ceilings, unexcavated spaces, crawl spaces, and tunnels.

C. Exposed Interior Installations: Exposed to view indoors. Examples include finished occupied spaces and mechanical equipment rooms.

D. Exposed Exterior Installations: Exposed to view outdoors, or subject to outdoor ambient temperatures and weather conditions. Examples include rooftop locations.

E. Concealed Interior Installations: Concealed from view and protected from physical contact by building occupants. Examples include above ceilings and in duct shafts.

F. Concealed Exterior Installations: Concealed from view and protected from weather conditions and physical contact by building occupants, but subject to outdoor ambient temperatures. Examples include installations within unheated shelters.

1.4 SUBMITTALS

A. General: Submit the following in accordance with Conditions of Contract and Division 1 Specifications Sections.

B. Product data for following piping specialties:

1. Mechanical sleeve seals.

2. Identification materials and devices.

C. Samples of color, lettering style, and other graphic representation required for each identification material and device.

D. Shop drawings detailing fabrication and installation for metal and wood supports and anchorage for mechanical materials and equipment.

E. Coordination drawings for access panel and door locations.

F. Prepare coordination drawings according to Division 1 Section Submittals" to a 1/4 inch equals 1 foot scale or larger. Detail major elements, components, and systems of mechanical equipment and materials in relationship with other systems, installations, and building components. Show space requirements for installation and access. Show where sequence and coordination of installations are important to the efficient flow of the Work. Include the following:

1. Proposed locations of piping, ductwork, equipment, and materials. Include the following:

   a. Planned piping layout, including valve and specialty locations and valve stem movement.
   b. Planned duct systems layout, including elbows radius and duct accessories.
   c. Clearances for installing and maintaining insulation.
   d. Clearances for servicing and maintaining equipment, including space for equipment disassembly required for periodic maintenance.
   e. Equipment service connections and support details.
   f. Exterior wall and foundation penetrations.
   g. Fire-rated wall and floor penetrations.
   h. Sizes and location of required concrete pads and bases.

2. Scheduling, sequencing, movement, and positioning of large equipment into the building during construction.

3. Floor plans, elevations, and details to indicate penetrations in floors, walls, and ceilings and their relationship to other penetrations and installations.

4. Reflected ceiling plans to coordinate and integrate installations, air outlets and inlets, light fixtures, communication systems components, sprinklers, and other ceiling-mounted items.

G. Welder certificates signed by Contractor certifying that welders comply with requirements specified under "Quality Assurance" Article of this Section.

1.5 QUALITY ASSURANCE

A. Qualify welding processes and operators for piping according to ASME "Boiler and Pressure Vessel Code," Section IX, "Welding and Brazing Qualifications."

1. Comply with provisions of ASME B31 Series "Code for Pressure Piping."

2. Certify that each welder has passed AWS qualification tests for the welding processes involved and that certification is current.

B. ASME A13.1 for lettering size, length of color field, colors, and viewing angles of identification devices.

C. Equipment Selection: Equipment of greater or larger power, dimensions, capacities, and ratings may be furnished provided such proposed equipment is approved in writing and connecting mechanical and electrical services, circuit breakers, conduit, motors, bases, and equipment spaces are increased. No additional costs will be approved for these increases, if larger equipment is approved. If minimum energy ratings or efficiencies of the equipment are specified, the equipment must meet the design requirements and commissioning requirements.

1.6 DELIVERY, STORAGE, AND HANDLING

A. Deliver pipes and tubes with factory-applied end-caps. Maintain end-caps through shipping, storage, and handling to prevent pipe-end damage and prevent entrance of dirt, debris, and moisture.

B. Protect stored pipes and tubes from moisture and dirt. Elevate above grade. When stored inside, do not exceed structural capacity of the floor.

C. Protect flanges, fittings, and piping specialties from moisture and dirt.

1.7 SEQUENCING AND SCHEDULING

A. Coordinate mechanical equipment installation with other building components.

B. Arrange for chases, slots, and openings in building structure during progress of construction, to allow for mechanical installations.

C. Coordinate the installation of required supporting devices and set sleeves in poured-in-place concrete and other structural components, as they are constructed.

D. Sequence, coordinate, and integrate installations of mechanical materials and equipment for efficient flow of the Work. Coordinate installation of large equipment requiring positioning prior to closing in the building.

E. Coordinate connection of mechanical systems with exterior underground and overhead utilities and services. Comply with requirements of governing regulations, franchised service companies, and controlling agencies.

F. Coordinate requirements for access panels and doors where mechanical items requiring access are concealed behind finished surfaces.

G. Coordinate installation of identifying devices after completion of covering and painting, where devices are applied to surfaces. Install identifying devices prior to installation of acoustical ceilings and similar concealment.

PART 2 - PRODUCTS

2.1 PIPE AND PIPE FITTINGS

A. Refer to individual piping system specification Sections for pipe and fitting materials and joining methods.

B. Pipe Threads: ASME B1.20.1 for factory-threaded pipe and pipe fittings.

2.2 JOINING MATERIALS

A. Refer to individual piping system specification Sections in Division 15 for special joining materials not listed below.

B. Pipe Flange Gasket Materials: Suitable for the chemical and thermal conditions of the piping system contents.

1. ASME B16.21, nonmetallic, flat, asbestos-free, 1/8-inch maximum thickness, except where thickness or specific material is indicated.

    a. Full-Face Type: For flat-face, Class 125 cast-iron and cast-bronze flanges.
    b. Narrow-Face Type: For raised-face, Class 250 cast-iron and steel flanges.

2. ASME B16.20 for grooved, ring-joint, steel flanges.

3. AWWA C110, rubber, flat face, 1/8-inch thick, except where other thickness is indicated; and full-face or ring type, except where type is indicated.

C. Flange Bolts and Nuts: ASME B18.2.1, carbon steel, except where other material is indicated.

D. Solder Filler Metal: ASTM B 32.

E. Flanged, Ductile-Iron Pipe Gasket, Bolts, and Nuts: AWWA C110, rubber gasket, carbon steel bolts and nuts.

F. Couplings: Iron body sleeve assembly, fabricated to match outside diameters of plain-end, pressure pipes.

1. Sleeve: ASTM A 126, Class B, gray iron.

2. Followers: ASTM A 47, Grade 32510 or ASTM A 536 ductile iron.

3. Gaskets: Rubber.

4. Bolts and Nuts: AWWA C111.

5. Finish: Enamel paint.

G. Copper tubing:

1. Joining for copper pipes 4 - inch and smaller; no lead, City of Los Angeles (approved type) for all copper pipe above ground under.

2. Sil-Fos silver alloy for pipe underground and for piping above ground having a continuous street main pressure of 100-lbs or more.

3. Wire solder only; paste mixed solder not permitted.

H. Flux: As recommended by manufacturer of solder.

2.3 PIPING SPECIALTIES

A. Escutcheons: Manufactured wall, ceiling, and floor plates; deep-pattern type, where required to conceal protruding fittings and sleeves.

1. Inside Diameter: Closely fit around pipe, tube, and insulation of insulated piping.

2. Outside Diameter: Completely cover opening.

3. Cast Brass: One-piece, with set-screw.

a. Finish: Rough brass.
b. Finish: Polished chrome plate.

4. Cast Brass: Split casting, with concealed hinge and set-screw.

a. Finish: Rough brass.
b. Finish: Polished chrome plate.

B. Dielectric Fittings: Assembly or fitting having insulating material isolating joined dissimilar metals, to prevent galvanic action and stop corrosion.

1. Description: Combination of copper alloy and ferrous; threaded, solder, plain, and weld neck end types and matching piping system materials.

2. Insulating Material: Suitable for system fluid, pressure, and temperature.

3. Dielectric Unions: Factory-fabricated, union assembly, for 250 psig minimum working pressure at 180 deg F temperature.

4. Dielectric Flanges: Factory-fabricated, companion-flange assembly, for 150 or 300 psig minimum pressure to suit system pressures.

5. Dielectric-Flange Insulation Kits: Field-assembled, companion-flange assembly, full-face or ring type. Components include neoprene or phenolic gasket, phenolic or polyethylene bolt sleeves, phenolic washers, and steel backing washers.

    a. Provide separate companion flanges and steel bolts and nuts for 150- or 300-psig minimum working pressure to suit system pressures.

6. Dielectric Couplings: Galvanized-steel coupling, having inert and non-corrosive, thermoplastic lining, with threaded ends and 300 psig minimum working pressure at 225 deg F temperature.

7. Dielectric Nipples: Electroplated steel nipple, having inert and non-corrosive, thermoplastic lining, with combination of plain, threaded, or grooved end types and 300 psig working pressure at 225 deg F temperature.

C. Mechanical Sleeve Seals: Modular, watertight, mechanical type. Components include interlocking synthetic rubber links shaped to continuously fill annular space between pipe and sleeve. Connecting bolts and pressure plates cause rubber sealing elements to expand when tightened.

D. Sleeves: The following materials are for wall, floor, slab, and roof penetrations:

1. Steel Sheet-Metal: 24 gage or heavier, galvanized sheet metal, round tube closed with welded longitudinal joint.

2. Steel Pipe: ASTM A 53, Type E, Grade A, Schedule 40, galvanized, plain ends.

3. Cast-Iron: Cast or fabricated "wall pipe" equivalent to ductile-iron pressure pipe, having plain ends and integral water stop, except where other features are specified.

4. Wall Penetration Systems: Wall sleeve assembly, consisting of housing, gaskets, and pipe sleeve, with 1 mechanical-joint end conforming to AWWA C110 and 1 plain pipe-sleeve end.

    a. Penetrating Pipe Deflection: 5 percent without leakage.
    b. Housing: Ductile-iron casting having waterstop and anchor ring, with ductile-iron gland, steel studs and nuts, and rubber gasket conforming to AWWA C111, of housing and gasket size as required to fit penetrating pipe.
    c. Pipe Sleeve: AWWA C151, ductile-iron pipe.
    d. Housing-to-Sleeve Gasket: Rubber or neoprene, push-on type, of manufacturer's design.

5. Cast-Iron Sleeve Fittings: Commercially-made, sleeve having integral clamping flange, with clamping ring, bolts, and nuts for membrane flashing.

    a. Underdeck Clamp: Clamping ring with set-screws.

2.4 IDENTIFYING DEVICES AND LABELS

A. General: Manufacturer's standard products of categories and types required for each application as referenced in other Division 15 Sections. Where more than single type is specified for listed application, selection is Installer's option, but provide single selection for each product category.

B. Equipment Nameplates: Metal nameplate with operational data engraved or stamped; permanently fastened to equipment.

1. Data: Manufacturer, product name, model number, serial number, capacity, operating and power characteristics, labels of tested compliances, and similar essential data.

2. Location: An accessible and visible location.

C. Stencils: Standard stencils, prepared for required applications with letter sizes conforming to recommendations of ASME A13.1 for piping and similar applications, but not less than 1-1/4-inches-high letters for ductwork and not less than 3/4-inch-high letters for access door signs and similar operational instructions.

1. Material: Fiberboard.

2. Material: Brass.

3. Stencil Paint: Standard exterior type stenciling enamel; black, except as otherwise indicated; either brushing grade or pressurized spray-can form and grade.

4. Identification Paint: Standard identification enamel of colors indicated or, if not otherwise indicated for piping systems, comply with ASME A13.1 for colors.

D. Plastic Duct Markers: Manufacturer's standard laminated plastic, color coded duct markers. Conform to following color code:

1. Green: Cold air.

2. Yellow: Hot air.

3. Yellow/Green: Supply air.

4. Blue: Exhaust, outside, return, and mixed air.

5. For hazardous exhausts, use colors and designs recommended by ASME A13.1.

6. Nomenclature: Include following:

a. Direction of air flow.
b. Duct service (supply, return, exhaust, etc.).

E. Plastic Equipment Markers: Laminated-plastic, color-coded equipment markers. Conform to following color code:

1. Green: Cooling equipment and components.

2. Yellow: Heating equipment and components.

3. Yellow/Green: Combination cooling and heating equipment and components.

4. Brown: Energy reclamation equipment and components.

5. Blue: Equipment and components that do not meet any of above criteria.

6. For hazardous equipment, use colors and designs recommended by ASME A13.1.

7. Nomenclature: Include following, matching terminology on schedules as closely as possible:

   a. Name and plan number.
   b. Equipment service.
   c. Design capacity.
   d. Other design parameters such as pressure drop, entering and leaving conditions, and rpm.

8. Size: Approximate 2-1/2 by 4 inches for control devices, dampers, and valves; and 4-1/2 by 6 inches for equipment.

F. Lettering and Graphics: Coordinate names, abbreviations, and other designations used in mechanical identification, with corresponding designations indicated. Use numbers, lettering, and wording indicated for proper identification and operation/maintenance of mechanical systems and equipment.

1. Multiple Systems: Where multiple systems of same generic name are indicated, provide identification that indicates individual system number as well as service such as "Boiler No. 3" and "Air Supply No. 1H."

PART 3 - EXECUTION

3.1 PIPING SYSTEMS - COMMON REQUIREMENTS

A. General: Install piping as described below, except where system Sections specify otherwise. Individual piping system specification Sections in Division 15 specify piping installation requirements unique to the piping system.

B. General Locations and Arrangements: Drawings (plans, schematics, and diagrams) indicate general location and arrangement of piping systems. Indicated locations and arrangements were used to size pipe and calculate friction loss, expansion, pump sizing, and other design considerations. Install piping as indicated, except where deviations to layout are approved on coordination drawings.

C. Install piping at indicated slope.

D. Install components having pressure rating equal to or greater than system operating pressure.

E. Install piping in concealed interior and exterior locations, except in equipment rooms and service areas.

F. Install piping free of sags and bends.

G. Install exposed interior and exterior piping at right angles or parallel to building walls. Diagonal runs are prohibited, except where indicated.

H. Install piping tight to slabs, beams, joists, columns, walls, and other building elements. Allow sufficient space above removable ceiling panels to allow for ceiling panel removal.

I. Install piping to allow application of insulation plus 1-inch clearance around insulation.

J. Locate groups of pipes parallel to each other, spaced to permit valve servicing.

K. Install fittings for changes in direction and branch connections.

L. Install couplings according to manufacturer's printed instructions.

M. Install pipe escutcheons for pipe penetrations of concrete and masonry walls, wall board partitions, and suspended ceilings according to the following:

1. Chrome-Plated Piping: Cast-brass, one-piece, with set-screw, and polished chrome-plated finish. Use split-casting escutcheons where required, for existing piping.

2. Uninsulated Piping Wall Escutcheons: Cast-brass or stamped-steel, with set-screw.

3. Uninsulated Piping Floor Plates in Utility Areas: Cast-iron floor plates.

4. Insulated Piping: Cast-brass or stamped-steel, with concealed hinge, spring clips, and chrome-plated finish.

5. Piping in Utility Areas: Cast-brass or stamped-steel, with set-screw or spring clips.

N. Sleeves are not required for core drilled holes.

O. Install sleeves for pipes passing through concrete and masonry walls, concrete floor and roof slabs, and where indicated.

P. Install sleeves for pipes passing through concrete and masonry walls, gypsum-board partitions, concrete floor and roof slabs, and where indicated.

1. Cut sleeves to length for mounting flush with both surfaces.

    a. Exception: Extend sleeves installed in floors of mechanical equipment areas or other wet areas 2 inches above finished floor level. Extend cast-iron sleeve fittings below floor slab as required to secure clamping ring where specified.

2. Build sleeves into new walls and slabs as work progresses.

3. Install large enough sleeves to provide 1/4-inch annular clear space between sleeve and pipe or pipe insulation. Use the following sleeve materials:

    a. Steel Pipe Sleeves: For pipes smaller than 6 inches.
    b. Steel Sheet-Metal Sleeves: For pipes 6 inches and larger, penetrating gypsum-board partitions.
    c. Cast-Iron Sleeve Fittings: For floors having membrane waterproofing. Secure flashing between clamping flanges. Install section of cast-iron soil pipe to extend sleeve to 2 inches above finished floor level. Flashing is specified in Division 7 Section "Flashing and Sheet Metal."

        1) Seal space outside of sleeve fittings with nonshrink, nonmetallic grout.

4. Except for below-grade wall penetrations, seal annular space between sleeve and pipe or pipe insulation, using elastomeric joint sealants specified in Division 7 Section "Joint Sealants."

Q. Above Grade, Exterior Wall, Pipe Penetrations: Seal penetrations using sleeves and mechanical sleeve seals. Size sleeve for 1-inch annular clear space between pipe and sleeve for installation of mechanical seals.

1. Install steel pipe for sleeves smaller than 6 inches.

2. Install cast-iron "wall pipes" for sleeves 6 inches and larger.

3. Assemble and install mechanical seals according to manufacturer's printed instructions.

R. Below Grade, Exterior Wall, Pipe Penetrations: Install cast-iron "wall pipes" for sleeves. Seal pipe penetrations using mechanical sleeve seals. Size sleeve for 1-inch annular clear space between pipe and sleeve for installation of mechanical seals.

S. Below Grade, Exterior Wall, Pipe Penetrations: Install ductile-iron wall penetration system sleeves according to manufacturer's printed installation instructions.

T. Fire Barrier Penetrations: Maintain indicated fire rating of walls, partitions, ceilings, and floors at pipe penetrations. Seal pipe penetrations with firestopping sealant material. Firestopping materials are specified in Division 7.

U. Verify final equipment locations for roughing-in.

V. Refer to equipment specifications in other Sections of these Specifications for roughing-in requirements.

W. Piping Joint Construction: Join pipe and fittings as follows and as specifically required in individual piping system specification Sections.

1. Ream ends of pipes and tubes and remove burrs. Bevel plain ends of steel pipe.

2. Remove scale, slag, dirt, and debris from inside and outside of pipe and fittings before assembly.

3. Soldered Joints: Construct joints according to AWS "Soldering Manual," Chapter 22 "The Soldering of Pipe and Tube."

4. Brazed Joints: Construct joints according to AWS "Brazing Manual," Chapter 28 "Pipe and Tube."

5. Threaded Joints: Thread pipe with tapered pipe threads according to ASME B1.20.1. Cut threads full and clean using sharp dies. Ream threaded pipe ends to remove burrs and restore full inside diameter. Join pipe fittings and valves as follows:

    a. Note the internal length of threads in fittings or valve ends, and proximity of internal seat or wall, to determine how far pipe should be threaded into joint.
    b. Apply appropriate tape or thread compound to external pipe threads (except where dry seal threading is specified).
    c. Align threads at point of assembly.

d. Tighten joint with wrench. Apply wrench to valve end into which pipe is being threaded.
e. Damaged Threads: Do not use pipe or pipe fittings having threads that are corroded or damaged. Do not use pipe sections that have cracked or open welds.

6. Welded Joints: Construct joints according to AWS D10.12 "Recommended Practices and Procedures for Welding Low Carbon Steel Pipe" using qualified processes and welding operators according to "Quality Assurance" Article.

7. Flanged Joints: Align flange surfaces parallel. Select appropriate gasket material, size, type, and thickness for service application. Install gasket concentrically positioned. Assemble joints by sequencing bolt tightening to make initial contact of flanges and gaskets as flat and parallel as possible. Use suitable lubricants on bolt threads. Tighten bolts gradually and uniformly using torque wrench.

X. Piping Connections: Except as otherwise indicated make piping connections as specified below.

1. Install unions, in piping 2 inches and smaller, adjacent to each valve and at final connection to each piece of equipment having 2-inches or smaller threaded pipe connection.

2. Install flanges, in piping 2-1/2-inches and larger, adjacent to flanged valves and at final connection to each piece of equipment having flanged pipe connection.

3. Dry Piping Systems (Gas, Compressed Air, and Vacuum): Install dielectric unions and flanges to connect piping materials of dissimilar metals.

4. Wet Piping Systems (Water and Steam): Install dielectric coupling and nipple fittings to connect piping materials of dissimilar metals.

3.2 EQUIPMENT INSTALLATION - COMMON REQUIREMENTS

A. Install equipment to provide the maximum possible headroom, where mounting heights are not indicated.

B. Install equipment according to approved submittal data. Portions of the Work are shown only in diagrammatic form. Refer conflicts to the Architect.

C. Install equipment level and plumb, parallel and perpendicular to other building systems and components in exposed interior spaces, except where otherwise indicated.

D. Install mechanical equipment to facilitate servicing, maintenance, and repair or replacement of equipment components. Connect equipment for ease of disconnecting, with minimum of interference with other installations. Extend grease fittings to an accessible location.

E. Install equipment giving right-of-way to piping systems installed at a required slope.

3.3 LABELING AND IDENTIFYING

A. Piping Systems: Install pipe markers on each system. Include arrows showing normal direction of flow and as indicated in other Division 15 sections.

1. Stenciled Markers: Complying with ASME A13.1.

2. Plastic markers, with application systems. Install on pipe insulation segment where required for hot non-insulated pipes.

3. Locate pipe markers as follows wherever piping is exposed in finished spaces, machine rooms, accessible maintenance spaces (shafts, tunnels, plenums) and exterior non-concealed locations.

   a. Near each valve and control device.
   b. Near each branch, excluding short take-offs for fixtures and terminal units. Mark each pipe at branch, where flow pattern is not obvious.
   c. Near locations where pipes pass through walls, floors, ceilings, or enter non-accessible enclosures.
   d. At access doors, manholes, and similar access points that permit view of concealed piping.
   e. Near major equipment items and other points of origination and termination.
   f. Spaced at a maximum of 50 feet intervals along each run. Reduce intervals to 25 feet in congested areas of piping and equipment.
   g. On piping above removable acoustical ceilings, except omit intermediately spaced markers.

B. Equipment: Install engraved plastic laminate sign or equipment marker on or near each major item of mechanical equipment.

1. Lettering Size: Minimum 1/4-inch-high lettering for name of unit where viewing distance is less than 2 feet, 1/2-inch-high for distances up to 6 feet, and proportionately larger lettering for greater distances. Provide secondary lettering 2/3 to 3/4 of size of principal lettering.

2. Text of Signs: Provide text to distinguish between multiple units, inform operator of operational requirements, indicate safety and emergency precautions, and warn of hazards and improper operations, in addition to name of identified unit.

C. Duct Systems: Identify air supply, return, exhaust, intake, and relief ducts with duct markers; or provide stenciled signs and arrows, showing duct system service and direction of flow.

1. Location: In each space where ducts are exposed or concealed by removable ceiling system, locate signs near points where ducts enter into space and at maximum intervals of 50 feet.

D. Adjusting: Relocate identifying devices which become visually blocked by work of this Division or other Divisions.

3.4 PAINTING AND FINISHING

A. Refer to Division 9 Section "Painting" for field painting requirements.

B. Damage and Touch-Up: Repair marred and damaged factory painted finishes with materials and procedures to match original factory finish.

3.5 CONCRETE BASES

A. Construct concrete equipment bases of dimensions indicated, but not less than 4 inches larger in both directions than supported unit. Follow supported equipment manufacturer's setting templates

for anchor bolt and tie locations. Use 3000 psi, 28-day compressive strength concrete and reinforcement as specified in Division 3 Section "Cast-In-Place Concrete."

3.6 ERECTION OF METAL SUPPORTS AND ANCHORAGE

A. Cut, fit, and place miscellaneous metal supports accurately in location, alignment, and elevation to support and anchor mechanical materials and equipment.

B. Field Welding: Comply with AWS D1.1 "Structural Welding Code - Steel."

3.7 ERECTION OF WOOD SUPPORTS AND ANCHORAGE

A. Cut, fit, and place wood grounds, nailers, blocking, and anchorage to support and anchor mechanical materials and equipment.

B. Select fastener sizes that will not penetrate members where opposite side will be exposed to view or will receive finish materials. Make tight connections between members. Install fasteners without splitting wood members.

C. Attach to substrates as required to support applied loads.

3.8 CUTTING AND PATCHING

A. Cut, channel, chase, and drill floors, walls, partitions, ceilings, and other surfaces necessary for mechanical installations. Perform cutting and patching as specified in other section.

B. Repair cut surfaces to match adjacent surfaces.

3.9 TEST AND TESTING

A. General: Tests shall be as required by the various Sections under Division 15, as well as by this Section.

B. Tests required by other Sections and the Sections where they are specified.

C. Tests may be required in the case of materials and equipment submittals and substitutions:

1. For items submitted which are altered, substituted, or which cannot readily be determined by the City Engineer as exactly conforming to the Specifications, Contractor may be required to submit certified test results to prove that the items in question meet Specification requirements.

2. Tests may also be required on certain items which are as specified, including fan and pump performance. Should such tests be required of specified items and tests prove that items do meet Specification requirements, the City will pay for applicable portions of tests.

D. Piping Tests:

1. Perform engineering tests required to demonstrate that operation of mechanical systems and their parts are in accordance with Specifications covering each item or system, and furnish materials, instruments and equipment necessary to conduct such tests. Tests shall be made in presence of the City Engineer, the Architect or the Field Inspector, and

the representatives of any governmental agency having jurisdiction. Work shall not be concealed or covered until required approvals are obtained.

2. Should Contractor refuse or neglect to perform any test required by Specifications, the City Engineer may perform such tests and Contractor shall pay charges in connection therewith.

3. Pressure gages used in testing shall have one pound graduations; vacuum gages shall have one-inch mercury graduations. Air shall be bled from lines requiring hydrostatic or water tests.

4. Systems shall be pressure tested in accordance with Pipe Test Schedule below. Pipe test shall show no loss in pressure after a minimum duration of 4 hours at test pressures indicated. Where local codes require higher test pressures than specified herein for Fire Sprinkler Systems, local codes shall govern.

5. Flue gas lines shall be tested twice: First with piping exposed, before backfilling trenches or lathing; second with pipe in finished arrangement, ground backfilled (paved where required) and walls finished.

6. Refrigerant piping may be tested using a halide detector or calibrated electronic testing equipment.

7. Piping systems may be tested as a unit or in sections as directed by the City Engineer, but entire system shall successfully meet requirements specified herein, before acceptance by the City Engineer.

8. Repair of damage to pipes and their appurtenances, or to any other structures resulting from or caused by these tests, shall be performed by Contractor.

E. Pipe Testing Schedule:

System Tested	Test Pressure (psig)	Test With:
Vent and roof drain (except pipes running under a slab or under-ground)	Fill with water to top of highest vent, allow to stand two hours, or longer, as directed by Inspector. Minimum head required for any joint shall be 10-feet in building.	Water
Cast-iron soil, waste and interior downspout, con-densate drain from air conditioning equipment	10-feet of water vertically	
Storm water disposal lines	Running water test	Water

Hot water heating system piping	150	Water
Domestic water piping (metallic)	200	Water
Fire Sprinkler piping	200	Water
Gas piping (steel threaded or plastic)	60 (both tests)	Air
Gas piping (steel welded)	100 (both tests)	Air
Refrigeration Suction Freon R407C	150	Nitrogen & Freon
Puron R410A	250	
Refrigeration Liquid & Hot Gas Piping Freon R407C	150	Nitrogen & Freon
Puron R410A	300	

F. Operational Tests:

1. Before operating any equipment or systems, a through check shall be made to determine that all systems have been flushed and cleaned as required and that all equipment has been properly installed, aligned, lubricated, and serviced.

   Factory instructions shall be checked to see that installations have been made accordingly and that recommended lubricants have been used in all bearings, gearboxes, crankcases, and similar equipment. Particular care shall be used in lubricating bearings to avoid damage by over-lubrication and blowing out seals. Equipment shall also be checked for any damage that may have occurred during shipment, after delivery, or during installation. In event of any damage, equipment shall be replaced, renewed, or repaired at Contractor's expense.

2. Contractor shall provide, maintain, and pay costs for equipment, instruments, and operating personnel as required for all tests hereinafter specified.

3. Contractor shall pay for electric energy and fuel required for tests.

4. Any final adjustment to equipment or systems shall meet specified performances requirements.

5. Any equipment, system, or work found deficient during any test shall be replaced or corrected. Retest and obtain approval from the City Engineer.

G. Project Completion Tests:

1. Upon completion of Mechanical work, or such a time prior to completion as may be determined by the City Engineer, all mechanical equipment and systems shall be operated and tested for a period of at least 5 consecutive 8-hour days to demonstrate satisfactory over-all operation of building or project as a completed unit. Tests shall include operation of heating, ventilating, and air conditioning equipment and systems for a period of not less than 2, 8-hour, days at not less than 90% of full, specified heating and cooling capacities.

2. Tests shall commence after preliminary balancing and adjustments to equipment and systems have been completed, and all running equipment has been checked and thoroughly lubricated.

3. Immediately before starting tests all air filter media shall be cleaned or renewed. Roll type filters shall be advanced to provide new clean media. Cleanable type media shall be thoroughly cleaned and shall be re-oiled with new clean oil as recommended by manufacturer if they are of viscous impingement type. Disposable type filters shall be replaced with new filters. Replaceable media shall be replaced with new media.

4. An accurate means of measuring air flow and temperatures shall be used to balance air supply, return, and exhaust systems, so that uniform temperatures occur in every room and design air flow is obtained through registers, diffusers and grilles.

5. Systems shall be adjusted to provide air flows indicated including maximum fresh air and maximum return air. Dampers shall be checked for proper settings and operation. Air and water inlet and leaving temperatures at coils shall be checked. Complete operational data including air flows, room temperatures, fan speeds, motor currents, plenum and duct static pressures shall be tabulated.

6. Welding done on this project may be subject to radiographic inspections at random.

H. Post Contract Tests: If required full load operating conditions cannot be obtained at time of project completion test, due to unfavorable outdoor temperatures or conditions, Contractor shall return to job site when requested by the City Engineer and operate and test equipment and systems at such times of year when proper loading of system can be accomplished. Such tests shall be conducted within a one-year period from completion date. Contractor will be notified at least 10 days prior to start.

3.10 LOCATION

A. Location of piping, apparatus and equipment as indicated on Drawings is approximate only and shall be altered to avoid all obstructions, preserve headroom and keep openings and passageways clear.

B. Placement of equipment in locations and spaces indicated shall be Contractor's responsibility. Any disassembling and reassembling of equipment, or other work necessary, shall be done without extra cost to the City.

3.11 CUTTING, NOTCHING AND BACKING

A. Conform to State Building Code, Title 24, Part 2, Section 2517(9) 8, 9, for notches and bored holes in wood; Section 2606, for pipes and sleeves embedded in concrete and for cuts in steel, as detailed on Structural Drawings.

B. Where pipes or ducts pass through, or are located within 1" of any construction element, install a resilient pad, 1/2" thick minimum, to prevent contact.

C. Contractor shall make provisions for recesses, chases, accesses, and provide sheet metal spacers, channel and backing as necessary for proper reception and installation of Mechanical work.

3.12 SERVICE INTERRUPTIONS, OFFSITE, GAS AND WATER

A. Arrange work so that there will be NO service interruptions of any existing systems.

B. When service interruptions are mandatory, arrange in advance with the City Engineer as to time and date of such interruptions.

C. Systems, which are interrupted, shall be put back into operation in such manner that they will function as they were originally intended.

3.13 OPERATION AND MAINTENANCE MANUALS AND REPAIR MANUAL

A. General: Submit 2 copies of operation and maintenance manuals in acceptable form and content. If no revisions are required, furnish one additional acceptable copy. If revisions are required, one copy will be returned with instructions for changes; make such changes and return 3 copies of acceptable manuals. Manuals shall be bound in hard-back, three-ring, loose-leaf binders. Deliver manuals to the City Engineer Inspector.

B. Contents of Manual:

1. Title sheet with job name, and names, addresses and telephone numbers of Contractor, Subcontractor and related equipment suppliers.

2. Typewritten manufacturer's operating instructions describing how to start and stop each piece of equipment, how to set temperature control systems for normal operation and normal restarting procedures, and caution and warning notices.

3. Manufacturer's product data and parts and maintenance booklet for each item of equipment furnished under Division 15.

4. Project Record drawings of Electrical and control diagrams.

5. Test and balance reports.

6. Valve directory.

7. Pipe and component identification chart.

C. Submit one complete copy of repair manual.

END OF SECTION

THIS PAGE INTENTIONALLY LEFT BLANK

SECTION 15119
ELECTRIC MOTOR ACTUATORS FOR VALVES AND SLIDE GATES

PART 1 - GENERAL

1.1 DESCRIPTION

This section includes materials and installation of electric motor actuators for valves and gates.

1.2 RELATED WORK SPECIFIED ELSEWHERE

A. Section 09800 Protective Coating.

B. Section 11820 Slide Gate.

C. Section 15340 Hangers and Support.

D. Section 15780 Piping Identification Systems.

1.3 SUBMITTALS

A. Submit shop drawings in accordance with the General Provisions.

B. Submit manufacturer's catalog data showing motor actuator parts and materials of construction, referenced by AISI, ASTM, SAE, or CDA specification and grade. Show motor actuator dimensions and weights. Identify each valve and actuator combination by tag number to which the catalog data and detail sheets pertain. Show coatings.

C. Show the maximum torque required to open and close each motor-actuated valve or gate.

D. Submit certified factory performance test records.

E. Submit motor data including nameplate data, insulation type, duty rating, and torque output at duty rating.

F. Submit electrical schematic drawings and wiring diagrams showing physical locations of components.

PART 2 - MATERIALS

2.1 ACTUATOR IDENTIFICATION

A. Motorized valves are identified in the drawings.

B. Motor actuators shall have the name of the manufacturer cast or molded onto the actuator body or shown on a permanently attached plate in raised letters.

2.2 ACTUATOR TAGGING

Provide identifying tags for electric motor-actuated valves and gates per Section 15119. Show valve or slide gate actuator tag number, name or designation as shown in the drawings, and valve size. Attach tags to actuators by means of stainless-steel wire.

2.3 ACTUATOR TORQUE REQUIREMENTS

A. The rated output torque of the motor actuator shall be at least 1.5 times the maximum torque required to open or close the valve or gate at any position including seating and unseating conditions when subjected to the most severe operating condition including any mechanical friction and/or other restrictive conditions that are inherent in the valve or slide gate assembly. Do not include hammer-blow effect in sizing the actuator to comply with this torque requirement. Coordinate with the valve or slide gate manufacturer to assure that the motor actuator stall torque output does not exceed the torque limits of the valve or slide gate operating stem or shaft.

B. Maximum torque shall include seating or unseating torque, bearing torque, dynamic torque, and hydrostatic torque. Assume that the differential pressure across the valve or gate is equal to the pressure or head rating of the valve or gate.

C. Assume a maximum pipeline fluid velocity of 16 fps with the valve fully open, unless a higher velocity is specified in the detailed valve specification.

2.4 DESIGN OF ELECTRIC MOTOR ACTUATORS

A. Actuators shall comply with AWWA C542, except as modified herein. Output capacity of motors shall be sufficient to open or close the valve against the maximum differential pressure when the voltage is 10% above or below normal at the specified service conditions. Motors shall have Class F or H insulation system. Provide motor with torque output (at duty rating) that exceeds the requirements of the following paragraphs including safety factor.

B. Design the actuator to move valves from fully closed to fully open in the time specified in the subsection on "Service Conditions."

C. Design actuators mounted on slide gates to move the gates from fully open to fully closed in five minutes or less at a rise rate of 12-inches per minute.

D. Provide a reversing starter, three overloads (one in each ungrounded leg) or two motor thermal cutouts, 120-volt control power transformer, local-off-remote selector switch, stop-open-close push buttons, and open and closed indicator lights. Provide magnetic starters in actuators for open/close operation and solid-state starters in actuators for modulating operation. Provide dry contact for remote indication of the actuator mode of operation. The contact shall be closed when the local-off-remote selector switch is in the remote position and the internal control power exists.

E. Do not use external conduit for wiring any components within the actuator.

F. Gear actuators shall be totally enclosed and factory-grease packed or oil lubricated. The power gearing shall consist of helical gears of heat-treated steel. Worm gears shall be alloy bronze accurately cut with a hobbing machine. Worm shall be hardened steel alloy. Design gears for 24-hour continuous service with an AGMA rating of 1.50.

G. Position switches shall be integrally geared to the actuator and shall be adjustable and capable of actuation at any point between fully opened and fully closed positions. The position switches shall operate while the actuator is either in manual or in motor operation. Provide motor actuators with position switches capable of being separately used to provide remote indication of end of travel in each direction and to stop motion at the end of travel in each direction.

H. Provide two individually adjustable torque switches to protect the valve or gate and motor against overload in the opening and closing directions. To prevent hammering, the torque switch shall not reclose until the valve or gate is made to travel in the opposite direction.

I. Provide a manually operated handwheel that shall not rotate during electrical operation. In the event electrical power is interrupted, handwheel operation shall be activated by a hand lever attached to the mechanism. While the valve or gate is being operated manually, the motor shall not rotate. Upon restoration of electrical power, the handwheel shall automatically disengage. Design the handwheel diameter such that hand operation will not damage the valve or gate.

J. The position switch and torque switch contacts shall be capable of interrupting at least 0.2-ampere inductive load at 125-volt dc or 6-ampere inductive load at 120-volt ac.

K. Provide a lost motion device for open/close operation to permit the motor to reach full speed before the load is applied. Provide lost motion action for manual operation also. Do not provide lost motion device for modulating applications.

L. Provide minimum 10-watt space heater mounted in the actuator housing to prevent condensation and maintain the temperature in the actuator housing 5 degrees above the ambient temperature in the structure. Heater shall be on at all times.

M. Motor shall de-energize in the event of a stall when attempting to unseat a jammed valve.

N. Provide a time delay to prevent instant reversal of the actuator motor.

O. Provide terminal connections for external remote controls fed from an internal 24-volt or 120-volt supply.

P. Provide two separate 1/2-inch conduit connections for control and power wiring.

Q. Electric motor actuators shall be Limitorque Model MX or L120, EIM, Rotork "Syncropak" or "IQ," AUMA Series SA, or equal.

PART 3 - EXECUTION

3.1 FACTORY PERFORMANCE TESTING OF MOTOR ACTUATOR

Test each actuator prior to shipment in accordance with AWWA C542, Section 5.3. The application torque shall be the maximum torque required to open or close the valve or gate at any position including seating and unseating conditions.

3.2 PAINTING AND COATING

Coat electric motor actuator the same as the valve or gate to which it is attached. If the valve or gate is not coated, coat actuator per Section 09800, System FM-3. Apply the specified prime and intermediate coats at the place of manufacture. Color of finish coat shall match the color of the valve or gate to which the actuator is attached.

3.3 SHIPMENT, STORAGE, AND TEMPORARY INSTALLATION BEFORE START-UP

A. Prepare equipment for shipment per AWWA C542, Section 6.2 and the following. The preparation shall make the equipment suitable for six months of outdoor storage from the time of shipment, with no disassembly required before operation, except for inspection of bearings and seals.

B. Identify the equipment with item and serial numbers and project equipment tag numbers. Material shipped separately shall be identified with securely affixed, corrosion-resistant metal tags indicating the item and serial number and project equipment tag numbers of the equipment for which it is intended. In addition, ship crated equipment with duplicate packing lists, one inside and one on the outside of the shipping container.

C. Pack and ship one copy of the manufacturer's standard installation instructions with the equipment. Provide the instructions necessary to preserve the integrity of the storage preparation after the equipment arrives at the jobsite and before start-up.

D. Provide flanged openings with metal closures at least 3/16-inch thick, with elastomer gaskets and at least four full-diameter bolts. Provide closures at the place of manufacture prior to shipping. For studded openings, use all the nuts needed for the intended service to secure closures.

E. Provide threaded openings with steel caps or solid-shank steel plugs. Do not use nonmetallic (such as plastic) plugs or caps. Provide caps or plugs at the place of manufacture prior to shipping.

F. Clearly identify lifting points and lifting lugs on the equipment or equipment package. Identify the recommended lifting arrangement on boxed equipment.

G. If actuators are stored or installed outside or in areas subject to temperatures below 40°F or are exposed to the weather prior to permanent installation, provide the manufacturer's recommended procedures for extended storage. Provide temporary covers over the actuator electrical components. Provide temporary conduits, wiring, and electrical supply to space heaters. Exercise each actuator from its fully open to fully closed position at least once every seven days. Inspect electrical contacts before start-up.

3.4 WALL CONNECTIONS AND EXTENSION STEMS

Where shown in the drawings, mount the electric motor actuators to wall with extension stems as shown in the plans.

3.5 ATTACHING ELECTRIC ACTUATORS

The valve or gate manufacturer shall mount the electric motor actuator and accessories on each valve or gate and stroke the valve or gate prior to shipment. Adjust limit switch positions and torque switches.

3.6 FIELD INSTALLATION

Install the valve and actuator as indicated in the drawings in accordance with the manufacturer's instructions. Keep units dry, closed, and sealed to prevent internal moisture damage during construction. Provide additional hangers and supports for actuators which are not mounted vertically over the valve or which may impose an eccentric load on the piping system.

3.7 FIELD TESTING OF MOTOR ACTUATORS

A. Test motor actuators as installed by measuring the current drawn (in amperes) by each motor for unseating, seating, and running conditions. The measured current shall not exceed the current measurement recorded during the factory performance test.

B. If the measured current drawn exceeds the above value, provide a larger motor or gear drive or adjust the actuator so that the measured amperage does not exceed the value.

C. Assure that limit switches are placed at their correct settings. Open and close valves and slide gates twice and assure that limit switches function.

END OF SECTION

THIS PAGE INTENTIONALLY LEFT BLANK

SECTION 15270
MECHANICAL SYSTEMS COMMISSIONING

PART 1 – GENERAL

1.01 DESCRIPTION

A. The purpose of this section is to specify Division 15 responsibilities in the commissioning process.

B. The systems to be commissioned are listed in Section 01810.

C. Commissioning requires the participation of Division 15 to ensure that all systems are operating in a manner consistent with the Contract Documents. The general commissioning requirements and coordination are detailed in Division 01, Section 01810. Division 15 shall be familiar with all parts of Division 01; Section 01810 and the commissioning plan issued by the CA and shall execute all commissioning responsibilities assigned to them in the Contract Documents.

1.02 RESPONSIBILITIES

A. Mechanical, Controls and TAB Contractors. The commissioning responsibilities applicable to each of the mechanical, controls and TAB contractors of Division 15 are as follows (all references apply to commissioned equipment only):

1. Construction and Acceptance Phases:

   a. Include and itemize the cost of commissioning in the contract price.
   b. In each purchase order or subcontract written, include requirements for submittal data, commissioning documentation, O&M data and training.
   c. Attend a commissioning kickoff meeting and other meetings necessary to facilitate the commissioning process.
   d. Contractors shall provide the CA with normal cut sheets and shop drawing submittals of commissioned equipment.
   e. Provide additional requested documentation, prior to normal O&M manual submittals, to the CA for development of start-up and functional testing procedures.

      (1) Typically, this will include detailed manufacturer installation and start-up, operating, troubleshooting and maintenance procedures, full details of any owner-contracted tests, fan and pump curves, full factory testing reports, if any, and full warranty information, including all responsibilities of the Owner to keep the warranty in force clearly identified. In addition, the installation, start-up and checkout materials that are actually shipped inside the equipment and the actual field checkout sheet forms to be used by the factory or field technicians shall be submitted to the Commissioning Agent.
      (2) The Commissioning Agent may request further documentation necessary for the commissioning process.
      (3) This data request may be made prior to normal submittals.

   f. Provide a copy of the O&M manuals and submittals of commissioned equipment, through normal channels, to the CA for review and approval.

g. Contractors shall assist (along with the design engineers) in clarifying the operation and control of commissioned equipment in areas where the specifications, control drawings or equipment documentation is not sufficient for writing detailed testing procedures.
h. Provide limited assistance to the CA in preparing the specific functional performance test procedures as specified in Section 15280. Subs shall review test procedures to ensure feasibility, safety and equipment protection and provide necessary written alarm limits to be used during the tests.
i. Develop a full start-up and initial checkout plan using manufacturer's start-up procedures and the prefunctional checklists from the CA for all commissioned equipment. Submit to CA for review and approval prior to startup. Refer to Section 01810 for further details on start-up plan preparation.
j. During the startup and initial checkout process, execute the mechanical-related portions of the prefunctional checklists for all commissioned equipment.
k. Perform and clearly document all completed startup and system operational checkout procedures, providing a copy to the CA.
l. Address current A/E punch list items before functional testing. Air and water TAB shall be completed with discrepancies and problems remedied before functional testing of the respective air- or water-related systems.
m. Provide skilled technicians to execute starting of equipment and to execute the functional performance tests. Ensure that they are available and present during the agreed upon schedules and for sufficient duration to complete the necessary tests, adjustments and problem solving.
n. Provide skilled technicians to perform functional performance testing under the direction of the CA for specified equipment in Section 15280 and 01810. Assist the CA in interpreting the monitoring data, as necessary.
o. Correct deficiencies (differences between specified and observed performance) as interpreted by the CA, CM and A/E and retest the equipment.
p. Prepare O&M manuals according to the Contract Documents, including clarifying and updating the original sequences of operation to as-built conditions.
q. During construction, maintain as-built red-line drawings for all drawings and final CAD as-builts for contractor-generated coordination drawings. Update after completion of commissioning (excluding deferred testing).
r. Provide training of the Owner's operating staff using expert qualified personnel, as specified.
s. Coordinate with equipment manufacturers to determine specific requirements to maintain the validity of the warranty.

2. Warranty Period:

a. Execute seasonal or deferred functional performance testing, witnessed by the CA, according to the specifications.
b. Correct deficiencies and make necessary adjustments to O&M manuals and as-built drawings for applicable issues identified in any seasonal testing.

B. Mechanical Contractor. The responsibilities of the HVAC mechanical contractor, during construction and acceptance phases in addition to those listed in (A) are:

1. Provide startup for all HVAC equipment, except for the building automation control system, if any.
2. Assist and cooperate with the TAB contractor and CA by:

    a. Putting all HVAC equipment and systems into operation and continuing the operation during each working day of TAB and commissioning, as required.
    b. Including cost of sheaves and belts that may be required by TAB.
    c. Providing test holes in ducts and plenums where directed by TAB to allow air measurements and air balancing. Providing an approved plug.
    d. Providing temperature and pressure taps according to the Construction Documents for TAB and commissioning testing.
    e. Install a P/T plug at each water sensor, which is an input point to the control system.
    f. List and clearly identify on the as-built drawings the locations of all air-flow stations.
    g. Prepare a preliminary schedule for Division 15 pipe and duct system testing, flushing and cleaning, equipment start-up and TAB start and completion for use by the CA. Update the schedule as appropriate.
    h. Notify the GC, CM or CA depending on protocol, when pipe and duct system testing, flushing, cleaning, startup of each piece of equipment and TAB will occur. Be responsible to notify the GC, CM or CA, ahead of time, when commissioning activities not yet performed or not yet scheduled will delay construction. Be proactive in seeing that commissioning processes are executed and that the CA has the scheduling information needed to efficiently execute the commissioning process.

C. Controls Contractor. The commissioning responsibilities of the controls contractor, during construction and acceptance phases in addition to those listed in (A) are:

1. Sequences of Operation Submittals. The Controls Contractor's submittals of control drawings shall include complete detailed sequences of operation for each piece of equipment, regardless of the completeness and clarity of the sequences in the specifications. They shall include:

    a. An overview narrative of the system (1 or 2 paragraphs) generally describing its purpose, components, and function.
    b. All interactions and interlocks with other systems.
    c. Detailed delineation of control between any packaged controls and the temperature control system, listing what points the temperature control system monitors only and what points are control points and are adjustable.
    d. Written sequences of control for packaged controlled equipment. (Equipment manufacturers' stock sequences may be included but will generally require additional narrative).
    e. Start-up sequences.
    f. Warm-up mode sequences.
    g. Normal operating mode sequences.
    h. Unoccupied mode sequences.
    i. Shutdown sequences.

j. Capacity control sequences and equipment staging.
k. Temperature and pressure control: setbacks, setups, resets, etc.
l. Detailed sequences for all control strategies, e.g., economizer control, optimum start/stop, staging, optimization, demand limiting, etc.
m. Effects of power or equipment failure with all standby component functions.
n. Sequences for all alarms and emergency shutdowns.
o. Seasonal operational differences and recommendations.
p. Initial and recommended values for all adjustable settings, setpoints and parameters that are typically set or adjusted by operating staff; and any other control settings or fixed values, delays, etc. that will be useful during testing and operating the equipment.
q. Schedules, if known.
r. To facilitate referencing in testing procedures, all sequences shall be written in small statements, each with a number for reference. For a given system, numbers will not repeat for different sequence sections, unless the sections are numbered.

2. Control Drawings Submittal:

a. The control drawings shall have a key to all abbreviations.
b. The control drawings shall contain graphic schematic depictions of the systems and each component.
c. The schematics will include the system and component layout of any equipment that the control system monitors, enables or controls, even if the equipment is primarily controlled by packaged or integral controls.
d. Provide a full points list with at least the following included for each point:

(1) Controlled system.
(2) Point abbreviation.
(3) Point description (DB temp, airflow, etc.).
(4) Display unit.
(5) Control point or setpoint (Point that controls equipment and can have its setpoint changed, e.g., OSA, SAT, etc.).
(6) Monitoring point (Point that does not control or contribute to the control of equipment, but is used for operation, maintenance, or performance verification).
(7) Intermediate point (Point whose value is used to make a calculation which then controls equipment, e.g., space temperatures that are averaged to a virtual point to control reset).
(8) Calculated point ("Virtual" point generated from calculations of other point values).

e. The Controls Contractor shall keep the CA informed of all changes to this list during programming and setup.

3. An updated as-built version of the control drawings and sequences of operation shall be included in the final controls O&M manual submittal.

4. Assist and cooperate with the TAB contractor in the following manner:

    a. For a given area, have all required prefunctional checklists, calibrations, startup and selected functional tests of the system completed and approved by the CA prior to TAB.
    b. Provide a qualified technician to operate the controls to assist the TAB contractor in performing TAB or provide sufficient training for TAB to operate the system without assistance.

5. Assist and cooperate with the CA in the following manner:

    a. Using a skilled technician who is familiar with this building, execute the functional testing of the controls system as specified for the controls contractor in Section 15280. Assist in the functional testing of all equipment specified in Section 15280.
    b. Execute all control system trend logs specified in Section 15280.

6. The controls contractor shall prepare a written plan indicating in a step-by-step manner, the procedures that will be followed to test, checkout and adjust the control system prior to functional performance testing, according to the process in Section 01810. At minimum, the plan shall include for each type of equipment controlled by the automatic controls:

    a. System name.
    b. List of devices.
    c. Step-by-step procedures for testing each controller after installation, including:

        (1) Process of verifying proper hardware and wiring installation.
        (2) Process of downloading programs to local controllers and verifying that they are addressed correctly.
        (3) Process of performing operational checks of each controlled component.
        (4) Plan and process for calibrating valve and damper actuators and all sensors.
        (5) A description of the expected field adjustments for transmitters, controllers and control actuators should control responses fall outside of expected values.

    d. A copy of the log and field checkout sheets that will document the process. This log must include a place for initial and final read values during calibration of each point and clearly indicate when a sensor or controller has "passed" and is operating within the contract parameters.
    e. A description of the instrumentation required for testing.
    f. Indicate what tests on what systems should be completed prior to TAB using the control system for TAB work. Coordinate with the CA and TAB contractor for this determination.

7. Provide a signed and dated certification to the CA and CM upon completion of the checkout of each controlled device, equipment and system prior to functional testing for each piece of equipment or system, that all system programming is complete as to all respects of the Contract Documents, except functional testing requirements.

8. Beyond the control points necessary to execute all documented control sequences, provide monitoring, control and virtual points as specified in Division 15.
9. List and clearly identify on the as-built duct and piping drawings the locations of all static and differential pressure sensors (air, water and building pressure).

D. TAB Contractor. The duties of the TAB contractor, in addition to those listed in (A) are:

1. Six weeks prior to starting TAB, submit to the CM the qualifications of the site technician for the project, including the name of the contractors and facility managers of recent projects the technician on which was lead. The Owner will approve the site technician's qualifications for this project.
2. Submit the outline of the TAB plan and approach for each system and component to the CA, CM and the controls contractor six weeks prior to starting the TAB. This plan will be developed after the TAB has some familiarity with the control system.
3. The submitted plan will include:

    a. Certification that the TAB contractor has reviewed the construction documents and the systems with the design engineers and contractors to sufficiently understand the design intent for each system.
    b. An explanation of the intended use of the temperature control system. The controls contractor will comment on feasibility of the plan.
    c. All field checkout sheets and logs to be used that list each piece of equipment to be tested, adjusted and balanced with the data cells to be gathered for each.
    d. Discussion of what notations and markings will be made on the duct and piping drawings during the process.
    e. Final test report forms to be used.
    f. Detailed step-by-step procedures for TAB work for each system and issue: flow calibration , diffuser proportioning, branch / submain proportioning, total flow calculations, rechecking, diversity issues, expected problems and solutions, etc. Criteria for using air flow straighteners or relocating flow stations and sensors will be discussed. Provide the analogous explanations for the water side, as applicable.
    g. List of all air flow, water flow, sound level, system capacity and efficiency measurements to be performed and a description of specific test procedures, parameters, formulas to be used.
    h. Details of how *total* flow will be determined (Air: via hood readings of all outlets, supply (SA) and return air (RA) pitot traverse, SA or RA flow stations, etc.).
    i. The identification and types of measurement instruments to be used and their most recent calibration date.
    j. Specific procedures that will ensure that both air and water side are operating at the lowest possible pressures and provide methods to verify this.
    k. Confirmation that TAB understands the outside air ventilation criteria under all conditions.
    l. Details of whether and how minimum outside air cfm will be verified and set, and for what level (total building, zone, etc.).
    m. Details of how building static and exhaust fan / relief damper capacity will be checked.
    n. Proposed selection points for sound measurements and sound measurement methods.

o. Details of methods for making any specified coil or other system plant capacity measurements.
p. Details of any TAB work to be done in phases (by floor, etc.), or of areas to be built out later.
q. Details regarding specified deferred or seasonal TAB work.
r. Details of any specified false loading of systems to complete TAB work.
s. Details of all exhaust fan balancing and capacity verifications, including any required room pressure differentials.

4. A running log of events and issues shall be kept by the TAB field technicians. Submit hand-written reports of discrepancies, deficient or uncompleted work by others, contract interpretation requests and lists of completed tests to the CA and CM at least twice a week.
5. Communicate in writing to the controls contractor all setpoint and parameter changes made or problems and discrepancies identified during TAB which affect the control system setup and operation.
6. Provide a draft TAB report within two weeks of completion. A copy will be provided to the CA. The report will contain a full explanation of the methodology, assumptions and the results in a clear format with designations of all uncommon abbreviations and column headings. The report should follow the latest and most rigorous reporting recommendations by AABC.
7. Provide the CA with any requested data, gathered, but not shown on the draft reports.
8. Provide a final TAB report for the CA with details, as in the draft.
9. Conduct functional performance tests and checks on the original TAB as specified for TAB in Section 15280.

1.03 RELATED WORK

A. Refer to Section 01810 Part 1.12 for systems to be commissioned and Section 01810 Part 3.05 and Section 15280 for functional testing requirements.

PART 2 – PRODUCTS

2.01 TEST EQUIPMENT

A. Division 15 shall provide all test equipment necessary to fulfill the testing requirements of this Division.

B. Refer to Section 01810 Part 2.01 for additional Division 15 requirements.

PART 3 – EXECUTION

3.01 SUBMITTALS

A. Division 15 shall provide submittal documentation relative to commissioning to the CA as requested by the CA. Refer to Section 01810, Part 3.03 for additional Division 15 requirements.

3.02 STARTUP

A. The HVAC mechanical and controls contractors shall follow the start-up and initial checkout procedures listed in the Responsibilities list in this section and in Section 01810. Division 15 has start-up responsibility and is required to complete systems and sub-systems so they are fully functional, meeting the design objectives of the Contract Documents. The commissioning procedures and functional testing do not relieve or lessen this responsibility or shift that responsibility partially to the commissioning agent or Owner.

B. Functional testing is intended to begin upon completion of a system. Functional testing may proceed prior to the completion of systems or sub-systems at the discretion of the CA and CM. Beginning system testing before full completion does not relieve the Contractor from fully completing the system, including all prefunctional checklists as soon as possible.

3.03 TAB

A. Refer to the TAB responsibilities in Part 1.02 above.

3.04 FUNCTIONAL PERFORMANCE TESTS

A. Refer to Section 01810 Part 1.12 for a list of systems to be commissioned and to Part 3.05 for a description of the process and to Section 15280 for specific details on the required functional performance tests.

3.05 TESTING DOCUMENTATION, NON-CONFORMANCE AND APPROVALS

A. Refer to Section 01810 Part 3.06 for specific details on non-conformance issues relating to prefunctional checklists and tests.

B. Refer to Section 01810 Part 3.05 for issues relating to functional performance tests.

3.06 OPERATION AND MAINTENANCE (O&M) MANUALS

A. The following O&M manual requirements do not replace O&M manual documentation requirements elsewhere in these specifications.

B. Division 15 shall compile and prepare documentation for all equipment and systems covered in Division 15 and deliver this documentation to the GC for inclusion in the O&M manuals, according to this section and Section 01810, prior to the training of owner personnel.

C. The CA shall receive a copy of the O&M manuals for review.

D. Special Control System O&M Manual Requirements. In addition to documentation that may be specified elsewhere, the controls contractor shall compile and organize at minimum the following data on the control system in labeled 3-ring binders with indexed tabs.

1. Three copies of the controls training manuals in a separate manual from the O&M manuals.

2. Operation and Maintenance Manuals containing:

    a. Specific instructions on how to perform and apply all functions, features, modes, etc. mentioned in the controls training sections of this specification and other features of this system. These instructions shall be step-by-step. Indexes and clear tables of contents shall be included. The detailed technical manual for programming and customizing control loops and algorithms shall be included.
    b. Full as-built set of control drawings (refer to Submittal section above for details).
    c. Full as-built sequence of operations for each piece of equipment.
    d. Full points list. In addition to the updated points list required in the original submittals (Part 1 of this section), a listing of all rooms shall be provided with the following information for each room:

        (1) Floor.
        (2) Room number.
        (3) Room name.
        (4) Air handler unit ID.
        (5) Reference drawing number.
        (6) Heating and/or cooling valve tag ID.
        (7) Minimum cfm.
        (8) Maximum cfm.

    e. Full print out of all schedules and set points after testing and acceptance of the system.
    f. Full as-built print out of any software program.
    g. Electronic copy on disk or CD Rom of the entire program for this facility.
    h. Marking of all system sensors and thermostats on the as-built floor plan and mechanical drawings with their control system designations.
    i. Maintenance instructions, including sensor calibration requirements and methods by sensor type, etc.
    j. Control equipment component submittals, parts lists, etc.
    k. Warranty requirements.
    l. Copies of all checkout tests and calibrations performed by the Contractor (not commissioning tests).

3. The manual shall be organized and subdivided with permanently labeled tabs for each of the following data in the given order:

    a. Sequences of operation.
    b. Control drawings.
    c. Points lists.
    d. Controller / module data.
    e. Thermostats and timers.
    f. Sensors and DP switches.
    g. Valves and valve actuators.
    h. Dampers and damper actuators.
    i. Program setups (software program printouts).

4. Field checkout sheets and trend logs should be provided to the CA for inclusion in the Commissioning Record Book.

E. Special TAB Documentation Requirements. The TAB will compile and submit the following with other documentation that may be specified elsewhere in the *Specifications.*

1. Final report containing an explanation of the methodology, assumptions, test conditions and the results in a clear format with designations of all uncommon abbreviations and column headings.
2. The TAB shall mark on the drawings where all traverse and other critical measurements were taken and cross reference the location in the TAB report.

F. Review and Approvals. Review of the commissioning related sections of the O&M manuals shall be made by the A/E and by the CA. Refer to Section 01810, Part 3.07 for details.

3.07 TRAINING OF OWNER PERSONNEL

A. The GC shall be responsible for training coordination and scheduling and ultimately to ensure that training is completed. Refer to Section 01810 for additional details.

B. The CA shall be responsible for overseeing and approving the content and adequacy of the training of Owner personnel for commissioned equipment. Refer to Section 01810 for additional details.

C. Mechanical Contractor. The mechanical contractor shall have the following training responsibilities:

1. Provide the CA with a training plan two weeks before the planned training according to the outline described in Section 01810, Part 3.08.
2. Provide designated Owner personnel with comprehensive orientation and training in the understanding of the systems and the operation and maintenance of each piece of HVAC equipment including, but not limited to air conditioning units, air handling units, fans, and controls, etc.
3. Training shall normally start with classroom sessions followed by hands-on training on each piece of equipment, which shall illustrate the various modes of operation, including startup, shutdown, fire/smoke alarm, power failure, etc.
4. During any demonstration, should the system fail to perform in accordance with the requirements of the O&M manual or sequence of operations, the system will be repaired or adjusted as necessary, and the demonstration repeated.
5. The appropriate trade or manufacturer's representative shall provide instructions on each major piece of equipment. This person may be the start-up technician for the piece of equipment, the installing contractor or manufacturer's representative. Practical building operating expertise as well as in-depth knowledge of all modes of operation of the specific piece of equipment are required. More than one party may be required to execute the training.
6. The controls contractor shall attend sessions other than the controls training, as requested, to discuss the interaction of the controls system as it relates to the equipment being discussed.
7. The training sessions shall follow the outline in the Table of Contents of the operation and maintenance manual and illustrate whenever possible the use of the O&M manuals for reference.
8. Training shall include:

    a. Use of the printed installation, operation and maintenance instruction material included in the O&M manuals.

b. A review of the written O&M instructions emphasizing safe and proper operating requirements, preventative maintenance, special tools needed, and spare parts inventory suggestions. The training shall include start-up, operation in all modes possible, shut-down, seasonal changeover and any emergency procedures.
c. Discussion of relevant health and safety issues and concerns.
d. Discussion of warranties and guarantees.
e. Common troubleshooting problems and solutions.
f. Explanatory information included in the O&M manuals and the location of all plans and manuals in the facility.
g. Discussion of any peculiarities of equipment installation or operation.
h. The format and training agenda in *The HVAC Commissioning Process, ASHRAE Guideline 1-1989R*, 1996 is a recommended reference.
i. Classroom sessions shall include the use of overhead projections, slides, video/audio-taped material as might be appropriate.

9. Hands-on training shall include start-up, operation in all modes possible, including manual, shutdown and any emergency procedures and preventative maintenance for all pieces of equipment.
10. The mechanical contractor shall fully explain and demonstrate the operation, function and overrides of any local packaged controls, not *controlled* by the central control system.
11. Training shall occur after functional testing is complete, unless approved otherwise by the Project Manager.
12. Duration of Training. The mechanical contractor shall provide training on each piece of equipment according to the following schedule.

Hours	System
2	Air Handling Units
1	Variable Speed Drives
2	Split System AC or Heat Pumps
1	Specialty Exhaust Fans
2	Controls

D. Controls Contractor. The controls contractor shall have the following training responsibilities:

1. Provide the CA with a training plan four weeks before the planned training according to the outline described in Section 01810, Part 3.08.
2. The controls contractor shall provide designated Owner personnel training on the control system in this facility. The intent is to clearly and completely instruct the Owner on all the capabilities of the control system.
3. Training manuals. The standard operating manual for the system and any special training manuals will be provided for each trainee, with three extra copies left for the O&M manuals. In addition, copies of the system technical manual will be demonstrated during training and three copies submitted with the O&M manuals. Manuals shall include detailed description of the subject matter for each session. The manuals will cover all control sequences and have a definitions section that fully describes all relevant words used in the manuals *and* in all software displays. Manuals will be approved by the CA. Copies of audiovisuals shall be delivered to the Owner.
4. The trainings will be tailored to the needs and skill-level of the trainees.

5. The trainers will be knowledgeable on the system and its use in buildings. For the on-site sessions, the most qualified trainer(s) will be used. The Owner shall approve the instructor prior to scheduling the training.
6. During any demonstration, should the system fail to perform in accordance with the requirements of the O&M manual or sequence of operations, the system will be repaired or adjusted as necessary and the demonstration repeated.
7. The controls contractor shall attend sessions other than the controls training, as requested, to discuss the interaction of the controls system as it relates to the equipment being discussed.
8. There shall be a training session, which shall consist of a total of 8 hours of actual training. Upon completion, each student, using appropriate documentation, should be able to perform elementary operations and describe general hardware architecture and functionality of the systems.

    a. This training shall be held on-site for a period of 8 hours. The portions of actual hands-on training shall take place after the completion of system commissioning. The session shall include instruction on:
        (1) Controls training. Upon completion, each student, using appropriate documentation, should be able to perform elementary operations and describe general hardware architecture and functionality of the system.
        (2) Specific hardware configuration of installed systems in this building and specific instruction for operating the installed system, including HVAC systems, lighting controls and any interface with security and communication systems.
        (3) Security levels, alarms, system start-up, shut-down, power outage and restart routines, changing setpoints and alarms and other typical changed parameters, overrides, freeze protection, manual operation of equipment, optional control strategies that can be considered, energy savings strategies and set points that if changed will adversely affect energy consumption, energy accounting, procedures for obtaining vendor assistance, etc.
        (4) All trending and monitoring features (values, change of state, totalization, etc.), including setting up, executing, downloading, viewing both tabular and graphically and printing trends. Trainees will actually set-up trends in the presence of the trainer.
        (5) Every screen shall be completely discussed, allowing time for questions.
        (6) Use of keypad or plug-in laptop computer at the zone level, if applicable.
        (7) Use of remote access to the system via phone lines or networks.
        (8) Graphics generation.
        (9) Point database entry and modifications.
        (10) Understanding DDC field panel operating programming (when applicable).

E. TAB The TAB contractor shall have the following training responsibilities:

1. TAB shall meet for 4 hours with facility staff after completion of TAB and instruct them on the following:

a. Go over the final TAB report, explaining the layout and meanings of each data type.
b. Discuss any outstanding deficient items in control, ducting or design that may affect the proper delivery of air or water.
c. Identify and discuss any duct runs, diffusers, coils, and fans that are close to or are not meeting their design capacity.
d. Discuss any temporary settings and steps to finalize them for any areas that are not finished.
e. Other salient information that may be useful for facility operations, relative to TAB.

3.08 DEFERRED TESTING

A. Refer to Section 01810, Part 3.09 for requirements of deferred testing.

3.09 WRITTEN WORK PRODUCTS

A. Written work products of Contractors will consist of the start-up and initial checkout plan described in Section 01810 and the filled out start-up, initial checkout and prefunctional checklists.

END OF SECTION

THIS PAGE INTENTIONALLY LEFT BLANK

SECTION 15280
MECHANICAL TESTING REQUIREMENTS

PART 1 – GENERAL

1.01 INCLUDED SYSTEMS AND EQUIPMENT

A. The following is a list of the equipment and system test requirements included in this section:

1. Wet Well Pump Station pumps and associated devices.

1.02 DESCRIPTION

A. This section specifies the functional testing requirements for Division 15 systems and equipment. From these requirements, the Commissioning Authority (CA) shall develop step-by-step procedures to be executed by the Subs or the Commissioning Authority. The general functional testing process, requirements and test method definitions are described in Section 01810. The test requirements for each piece of equipment or system contain the following:

1. The contractors responsible to execute the tests, under the direction of the CA.
2. A list of the integral components being tested.
3. Prefunctional checklists associated with the components.
4. Functions and modes to be tested.
5. Required conditions of the test for each mode.
6. Special procedures.
7. Required methods of testing.
8. Required monitoring.
9. Acceptance criteria.
10. Sampling strategies allowed.

1.03 PREREQUISITES

A. The following applicable generic prerequisite checklist items shall be listed on each written functional test form and be completed prior to functional testing.

1. All related equipment has been started up and start-up reports and prefunctional checklists submitted and approved ready for functional testing. Sample prefunctional checklists can be found in Section 01813. These are samples and for reference only. Final prefunctional checklists will be provided as part of the Construction Phase Commissioning Plan.
2. All control system functions for this and all interlocking systems are programmed and operable per contract documents, including final setpoints and schedules with debugging, loop tuning and sensor calibrations completed.

   _____ _____
   Controls Contractor Signature or Verbal Date
3. Piping system flushing complete and required report approved.
4. Test and balance (TAB) complete and approved for the hydronic system.
5. All A/E punchlist items for this equipment corrected.
6. These functional test procedures reviewed and approved by installing contractor.
7. Safeties and operating ranges reviewed by the CA.
8. Test requirements and sequences of operation attached.

9. Schedules and setpoints attached.
10. False loading equipment, system and procedures ready.
11. Sufficient clearance around equipment for servicing.
12. Record of all values for pre-test setpoints changed to accommodate testing has been made and a check box provided to verify return to original values (control parameters, limits, delays, lockouts, schedules, etc.).
13. Other miscellaneous checks of the prefunctional checklist and start-up reports completed successfully.

1.04 TEST METHODS

A. MANUAL

1. Manual testing involves using hand-held instruments, immediate control system readouts or direct observation to verify performance of a system.

B. MONITORING

1. Monitoring is a method of testing as a stand-alone method or to augment manual testing.
2. All points listed in the required monitoring section of the test requirements which are control system monitored points shall be trended by the controls contractor. At the option of the CA, some control system monitoring may be replaced with datalogger monitoring. At the CA's request, the controls contractor shall trend up to 20% more points than listed herein at no extra charge.
3. Hard copies of monitored data must be in columnar format with time down the left column and at least 5 columns of point values on the same page.
4. Graphical output is desirable, and will be required for all output, if the system can produce it.

PART 2 – PRODUCTS

NOT LISTED

PART 3 – EXECUTION

3.01 TEMPERATURE CONTROL SYSTEM

A. Parties Responsible to Execute Functional Test:

1. Controls contractor: operate the controls to activate the equipment.
2. CA: to witness, direct and document testing, Mechanical Contractor assist in testing sequences.

B. Integral Components or Related Equipment Being Tested:

1. Building Automation System, if any.
2. All prefunctional checklists of controlled equipment.

C. Prerequisites The applicable prerequisite checklist items listed in the beginning of this Section shall be listed on each functional test form and checked off prior to functional testing. The commissioning agent will also spot-check misc. items and calibrations on the

prefunctional checklists previously completed by the installer, before the beginning of functional testing.

D. A significant part of the temperature control system functional testing requirements is the successful completion of the functional tests of equipment the temperature control system controls or interlocks with. Uncompleted equipment functional tests or outstanding deficiencies in those tests lend the required temperature control system functional testing incomplete.

E. Integral or stand-alone controls are functionally tested with the equipment they are attached to, including any interlocks with other equipment or systems and thus are not covered under the temperature control system testing requirements, except for any integrated functions or interlocks listed below.

F. The following testing requirements are in addition to and do not replace any testing requirements elsewhere in the specifications.

Function / Mode	Test Method Manual (demonstration), Monitoring, Either or Both
MISC. FUNCTIONS	
1. All specified functions and features are set up, debugged and fully operable	Verbal discussion of features
2. Power failure and battery backup and power-up restart functions	Demonstration
3. Specified trending and graphing features demonstration	See equipment trends
4. Global commands features	Demonstration
5. Security and access codes	Demonstration
6. Occupant over-rides (manual, telephone, key, keypad, etc.)	Demonstration
7. O&M schedules and alarms	Demonstration
8. Scheduling features fully functional and setup, including weekends and holidays	Observation in terminal screens or printouts
9. Date and time setting in central computer and verify field panels read the same time	Demonstration
10. Included features not specified to be setup are installed (list)	Demonstration
11. Demonstrate functionality of field panels using local operator keypads and local ports (plug-ins)	Demonstration of 100% of panels and 10% of ports
12. All graphic screens and value readouts completed	Demonstration
13. Setpoint changing features and functions	Done during equipment testing
14. Communications to remote sites	Demonstration
15. Sensor calibrations	Sampled during equipment tests
16. "After hours" use tracking and billing	
17. Final as-builts or redlines (per spec) control drawings, final points list, program code, setpoints, schedules, warranties, etc. per specs, submitted for O&Ms.	Observation
18. Verify that points that are monitored only, having no control function, are checked for proper reporting.	Observation

Function / Mode	Test Method Manual (demonstration), Monitoring, Either or Both
INTEGRATED TESTS	
19. Fire alarm interlocks and response	Demonstration
20. Duty cycling (if specified)	Monitoring
21. Demand limiting (including over-ride of limiting)	Monitoring
22. Sequential staging ON of equipment	Either
23. Optimum start-stop functions	Monitoring
24. All control strategies and sequences not tested during controlled equipment testing	Either

G. Additional Required Monitoring:

1. Besides the trending and monitoring required with the functional testing of equipment, all points listed below which are control system monitored points shall be trended by the controls contractor. Refer to the Monitoring section at the beginning of this Section for additional monitoring details.

Point	Time Step (min.)	Minimum Time Period of Trend	Hard Copy? (Y/N)	ASCII File? (Y/N)	Function Being Tested
Misc. equipment current or status for duty cycling and demand limiting	5	5 days incl. weekend	Y	Y	20, 21
Equipment or building kW or current for demand limiting	5	5 days incl. weekend	Y	Y	20, 21
Optimum start/stop equip.	5	5 days incl. weekend	Y	Y	23

H. Acceptance Criteria (referenced by function or mode ID):

1. For the conditions, sequences and modes tested, the integral components and related equipment respond to changing conditions and parameters appropriately as expected, as specified and according to acceptable operating practice.

I. Sampling Strategy for Identical Units:

1. Sample 10% of the field panels for procedure 9, and 10% of the local ports for procedure 11. If 10% fail, test another 10%. If 10% of those fail, test all remaining units at the contractor's expense.

3.02 EXHAUST FANS

A. Parties Responsible to Execute Functional Test:

1. Controls contractor: operate the controls to activate the equipment, if BAS controlled.
2. CA: to witness, direct and document testing.

B. Integral Components or Related Equipment Being Tested:

1. Exhaust fans.

C. Prerequisites The applicable prerequisite checklist items listed in the beginning of this Section shall be listed on each functional test form and checked off prior to functional testing. The commissioning agent will also spot-check misc. items and calibrations on the prefunctional checklists previously completed by the installer, before the beginning of functional testing.

D. Functions / Modes Required To Be Tested, Test Methods and Seasonal Test Requirements:

1. The following testing requirements are in addition to and do not replace any testing requirements elsewhere in this Division.

Function / Mode	Test Method Manual, Monitoring, Either or Both	Required Seasonal Test
General 1. Test each sequence in the sequence of operations, and other significant modes and sequences not mentioned; including startup, shutdown, unoccupied & manual modes and power failure. Test functionality of this piece of equipment or system in all control strategies or interlocks that it is associated with.	Manual	
In addition to, or as part of (1) above, the following modes or tests are required:		
2. Verify schedules and setpoints to be reasonable and appropriate		
3. Function at fire alarm (off, depressurization, etc.)	Manual	
4. Interlocks to building pressurization control	Manual	
5. Speed controls	Either	
6. Check TAB report record of sound power level tests and space pressures and compare to specifications	Review	
7. Sensor calibration checks on any controlling temperature or pressure sensor	Manual	

E. Acceptance Criteria (referenced by function or mode ID):

1. For the conditions, sequences and modes tested, the fans, integral components and related equipment respond to changing conditions and parameters appropriately as expected, as specified and according to acceptable operating practice.

F. Sampling Strategy for Identical:

1. No sampling, test all.

3.03 PACKAGED DX AIR CONDITIONING OR HEAT PUMP UNITS

A. Parties Responsible to Execute Functional Test:

1. Controls contractor: operate the controls to activate the equipment.
2. CA: to witness, direct and document testing. Mechanical contractor or equipment vendor to assist in testing sequence as needed.

B. Integral Components or Related Equipment Being Tested:

1. Unit (fans, coils, condenser, compressors).
2. Power exhausters.
3. Economizers.

C. Prerequisites The applicable prerequisite checklist items listed in the beginning of this Section shall be listed on each functional test form and checked off prior to functional testing. The commissioning agent will also spot-check misc. items and calibrations on the prefunctional checklists previously completed by the installer, before the beginning of functional testing.

D. Functions / Modes Required To Be Tested, Test Methods and Seasonal Test Requirements:

1. The following testing requirements are in addition to and do not replace any testing requirements elsewhere in this Division.

Function / Mode	Test Method Manual, Monitoring, Either or Both	Required Seasonal Test[1]
General 1. Test each sequence in the sequence of operations, and other significant modes and sequences not mentioned; including startup, shutdown, unoccupied & manual modes and power failure. Test functionality of this piece of equipment or system in all control strategies or interlocks that it is associated with.	Manual	
In addition to, or as part of (1) above, the following modes or tests are required:		
2. Supply air, and reset temp. control functions	Both	
3. Compressor unloading & condenser fan staging for head pressure control	Both	
4. Demand limiting control (if applicable)	Monitoring	Cooling
5. Duct static pressure (SP) control	Both	
6. Return or exhaust fan tracking and building SP	Monitoring	
7. Damper interlocks and correct modulation in all modes, including fire and smoke dampers	Manual	
8. Verification of minimum OSA quantity	Either	[2]
9. Verification of Economizer and Power Exhauster operation	Either	[2]
10. Verify TAB reported SF cfm with control system reading	Manual	[2]
11. All alarms (low limits, high static, freezestat, etc.)	Manual	
12. Sensor and actuator calibration checks on: duct static pressure sensor on units >10 tons, SAT, MAT, OSAT, economizer and RA dampers and other random checks (EMS readout against hand-held calibrated instrument must be within 0.5°F for temps. or within a tolerance equal to 10% of static pressure setpoint, with an inclined manometer)	Manual	
13. Verify control strategies, schedules and setpoints to be reasonable and appropriate		

[1]Cooling season, Heating season or Both. "Design" means within 5°of season design (ASHRAE 2 1/2%), or 95% of loading design. A blank cell denotes no special seasonal test is required and that test can be executed during any season, if condition simulation is appropriate.
[2]Seasonal test not required if seasonal conditions can be adequately simulated.

E. Special Procedures (other equipment to test with, etc.; reference to function ID):

1. Reduced Testing for Smaller Units. For standard application AHU's less than 15 tons, the following modifications to the testing requirements apply: 1) either Manual or Monitoring will satisfy the verification requirement--where Both is listed, choose one. 2) Testing Modes 6, 8, 11, 13 and 16 is not required.

Point	Time Step (min.)	Minimum Time Period of Trend	Hard Copy? (Y/N)	ASCII File? (Y/N)	Function Being Tested
For each Unit being tested:					
RAT	5	5 days incl. weekend	Y	Y	1-3, 11
SAT	5	5 days incl. weekend	Y	Y	1-3
CC LAT	5	5 days incl. weekend	Y	Y	1-3
MAT	5	5 days incl. weekend	Y	Y	1, 3, 11
SF speed	5	5 days incl. weekend	Y	Y	1, 3-6
Duct SP	5	5 days incl. weekend	Y	Y	5, 6
OSAT	5	5 days incl. weekend	Y	Y	All
Indoor dry-bulb all zones	5	5 days incl. weekend	Y	Y	All
Compressor amps or stage	5	5 days incl. weekend	Y	Y	3
Condenser fan amps or stage	5	5 days incl. weekend	Y	Y	3

F. Acceptance Criteria:

1. For the conditions, sequences and modes tested, the system, integral components and related equipment respond to varying loads and changing conditions and parameters appropriately as expected, as specified and according to acceptable operating practice.
2. RTU shall be able to maintain the SA temperature within 1.0F either side of the deadband of the current setpoint without excessive hunting.
3. RTU and controls shall control the duct static pressure so that it does not drift more than an amount equal to 10% of the setpoint value either side of the deadband without excessive hunting.

G. Sampling Strategy for Identical Units:

1. No sampling, test all.

3.04 TEST AND BALANCE WORK (TAB)

A. Parties Responsible to Execute Functional Test:

1. TAB contractor: perform checks using test instruments.
2. Controls contractor: operate the controls to activate the equipment.
3. CA: to witness, direct and document testing.

B. Integral Components or Related Equipment Being Tested:

1. TAB air-side.

C. Prerequisites. The applicable prerequisite checklist items listed in the beginning of this Section shall be listed on each functional test form and checked off prior to functional testing. The commissioning agent will also spot-check misc. items and calibrations on the prefunctional checklists previously completed by the installer, before the beginning of functional testing.

D. Purpose. The purpose of this test is to spot check the TAB work to verify that it was done in accordance with the contract documents and acceptable practice and that the TAB report is accurate.

E. The following tests and checks will be conducted. The following testing requirements are in addition to and do not replace any testing requirements elsewhere in this Division.

Test or Check	Test Method	Required Seasonal Test[3]
1. A random sample of up to 50 % the TAB report data shall be selected for verification (air velocity, air or water flow rate, pressure differential, electrical or sound measurement, etc.). The original TAB contractor will execute the checks, witnessed by the commissioning authority. The TAB contractor will use the same test instruments as used in the original TAB work. A failure[1] of more than 10% of the selected items of a given system[2] shall result in the failure of acceptance of the system TAB report and the TAB contractor shall be responsible to rebalance the system, provide a new system TAB report and repeat random verifications of the new TAB report. The random testing will include the verification of minimum outdoor air intake flows at minimum, maximum and intermediate total airflow rates for all of the air handlers. Other selected data to be verified will be made known upon day of testing.	Demonstration	
2. Verify that final settings of all valves, splitters, dampers and other adjustment devices have been permanently marked by the TAB Contractor.	Demonstration	
3. Verification that the air system is being controlled to the lowest possible static pressure while still meeting design loads, less diversity. This shall include a review of TAB methods, control setpoints established by TAB and a physical verification of at least one leg from fan to diffuser having all balancing dampers wide open and that during full cooling of all TUs taking off downstream of the static pressure sensor, the TU on the critical leg has its damper 90% or more open.	Demonstration	

Test or Check	Test Method	Required Seasonal Test[3]
4. Verification that the water system is being controlled to the lowest possible pressure while still meeting design loads, less diversity. This shall include a review of TAB methods, control setpoints established by TAB and a physical verification of at least one leg from the pump to the coil having all balancing valves wide open and that during full cooling the cooling coil valve of that leg is 90% or more open.	Demonstration	

[1]Failure of an item is defined as follows:

For air flow of supply and return: a deviation of more than 10% of instrument reading.

For minimum outside air flow: 20% of instrument reading (30% for reading at intermediate supply low for inlet vane or VFD OSA compensation system using linear proportional control).

For temperatures: a deviation of more than 1°F.

For air and water pressures: a deviation of more than 10% of full scale of test instrument reading.

For sound pressures: a deviation of more than 3 decibels. (Variations in background noise must be considered).

[2]Examples of a "system" are: the air distribution system served by one air handler or the hydronic chilled water supply system served by a chiller or the condenser water system. Systems can be defined smaller if inaccuracies in TAB work within the smaller defined system will have little or no impact on connected systems.

[3]Cooling season, Heating season or Both. "Design" means within 5°of season design (ASHRAE 2 1/2%), or 95% of loading design. A blank cell denotes no special seasonal test is required and that test can be executed during any season, if condition simulation is appropriate.

F. Special Procedures:

1. None.

G. Required Monitoring:

1. None.

H. Acceptance Criteria:

1. Provided in footnote to test table above.

I. Sampling Strategy for Identical Units:

1. Described in test table above.

END OF SECTION

THIS PAGE INTENTIONALLY LEFT BLANK

SECTION 15320
ELECTRICAL REQUIREMENTS FOR MECHANICAL EQUIPMENT

PART 1 – GENERAL

1.1 RELATED DOCUMENTS

A. Drawings and general provisions of Contract, including General and Supplementary Provisions and Division 1A General Requirements, apply to work of this section.

B. Related Sections: Separate electrical components and materials required for field installation and electrical connections are specified in Division 16.

1.2 SUMMARY

A. This section specifies the basic requirements for electrical components which are an integral part of packaged mechanical equipment. These components include, but are not limited to factory installed motors, starters, and disconnect switches furnished as an integral part of packaged mechanical equipment.

B. Specific electrical requirements (i.e. horsepower and electrical characteristics) for mechanical equipment are scheduled on the Drawings.

1.3 REFERENCES

A. NEMA Standards MG 1: Motors and Generators.

B. NEMA Standards ICS 2: Industrial Control Devices, Controllers, and Assemblies.

C. NEMA Standard 250: Enclosures for Electrical Equipment.

D. NEMA Standard KS 1: Enclosed Switches.

E. National Electrical Code (NFPA 70).

F. NFPA 820 Standard for Fire Protection in Wastewater Treatment and Collection Facilities.

1.4 SUBMITTALS

A. No separate submittal is required. Submit product data for motors, starters, and other electrical components with submittal data required for the equipment for which it serves, as required by the individual equipment specification sections.

1.5 QUALITY ASSURANCE

A. Electrical components and materials shall be UL labeled.

PART 2 – PRODUCTS

2.1 MOTORS

A. The following are basic requirements for simple or common motors. For special motors, more detailed and specific requirements are specified in the individual equipment specifications.

1. Torque characteristics shall be sufficient to satisfactorily accelerate the driven loads.

2. Motor sizes shall be large enough so that the driven load will not require the motor to operate in the service factor range.

3. Temperature Rating: Rated for 40 deg. C environment with maximum 50 deg. C temperature rise for continuous duty at full load (Class A Insulation).

4. Starting capability: frequency of starts as indicated by automatic control system, and not less than 5 evenly time spaced starts per hour for manually controlled motors.

5. Service Factor: L15 for poly-phase motors and 1.35 for single phase motors.

6. Motor construction: NEMA Standard MG 1, general purpose, continuous duty, Design "B", except "C" where required for high starting torque.

    a. Frames: NEMA Standard No. 48 or 54; use driven equipment manufacturer's standards to suit specific application.
    b. Bearing:

        1) ball or roller bearings with inner and outer shaft seals;
        2) re-greasable, except permanently sealed where motor is normally inaccessible for regular maintenance;
        3) designed to resist thrust loading where belt drives or other drives produce lateral or axial thrust in motor;
        4) for fractional horsepower, light duty motors, sleeve type bearings are permitted.

    c. Enclosure Type:

        1) open drip-proof motors for indoor use where satisfactorily housed or remotely located during operation;
        2) guarded drip-proof motors where exposed to contact by employees or building occupants;
        3) weather protected Type 1 for outdoor use, Type II where not housed;
        4) Submersible pumps shall be explosion proof and suitable for Class I Division II installations.

    d. Overload protection: built-in thermal overload protection and, where indicated, internal sensing device suitable for signaling and stopping motor at starter.
    e. Noise rating: "Quiet" rating on motors located in occupied spaces of building.
    f. Nameplate: indicate the full identification of manufacturer, ratings, characteristics, construction, special features and similar information.

2.2 STARTERS, ELECTRICAL DEVICES, AND WIRING

A. Motor Starter Characteristics:

1. Enclosures: NEMA 1, general purpose enclosures with padlock ears, except in wet locations shall be NEMA 3R with conduit hubs, or units in hazardous locations which shall have NEC proper class and division.

2. Type and size of starter shall be as recommended by motor manufacturer and the driven equipment manufacturer for applicable protection and start-up condition.

B. Manual switches shall have:

1. Pilot lights and extra positions for multi-speed motors.

2. Overload protection: melting alloy type thermal overload relays.

C. Magnetic Starters:

1. Maintained contact push buttons and pilot lights, properly arranged for single speed or multi-speed operation as indicated.

2. Trip-free thermal overload relays, each phase.

3. Interlocks and similar devices as required for coordination with control requirements of Division-15 and Division -17.

4. Built-in 120 volts control circuit transformer, fused from line side, where service exceeds 240 volts.

5. Externally operated manual reset.

6. Under-voltage release or protection.

D. Motor connections:

1. Flexible conduit, except where plug-in electrical cords are specifically indicated.

2.3 CAPACITORS

A. Features:

1. Individual unit cells.

2. All welded steel housing.

3. Each capacitor internally fused.

4. Non-flammable synthetic liquid impregnant.

5. Craft tissue insulation.

6. Aluminum foil electrodes.

7. KVAR size shall be as required to correct motor power factor to 90 percent or better and shall be installed on all motors 1 horsepower and larger, that have an uncorrected power factor of less than 85 percent at rated load.

B. Disconnect Switches:

1. Fusible switches: fused, each phase; general duty; horsepower rated; non-teasible quick-make, quick-break mechanism; dead front line side shield; solderless lugs suitable for copper or aluminum conductors; spring reinforced fuse clips; electro silver plated current carrying parts; hinged doors; operating lever arranged for locking in the "OPEN" position; arc quenchers; capacity and characteristics as indicated.

2. Non-fusible switches: for equipment 2 horsepower and smaller, shall be horsepower rated; toggle switch type; quantity of poles and voltage rating as indicated. For equipment larger than 2 horsepower, switches shall be the same as fusible type.

PART 3 – EXECUTION (NOT APPLICABLE)

END OF SECTION

SECTION 15340
HANGERS AND SUPPORTS

PART 1 - GENERAL

1.1 SUMMARY

A. Section includes pipe and equipment supports, hangers, anchors, guides and bases sleeves and the sealing of work to adjacent construction.

B. Related Sections:

1. Division 3 Concrete: the execution requirements for placement of inserts and sleeves in concrete forms specified by this division.

2. Section 03300 – Cast-in-Place Concrete: Execution requirements for placement of concrete housekeeping pads specified by this section.

1.2 REFERENCES

A. ASME B31.1 (American Society of Mechanical Engineers) - Power Piping.

B. ASME B31.9 (American Society of Mechanical Engineers) - Building Services Piping.

C. ASTM F708 - Design and Installation of Rigid Pipe Hangers.

D. MSS SP58 (Manufacturers Standardization Society of the Valve and Fittings Industry) - Pipe Hangers and Supports - Materials, Design and manufacturer.

E. MSS SP69 (Manufacturers Standardization Society of the Valve and Fittings Industry) - Pipe Hangers and Supports - Selection and Application.

F. MSS SP89 (Manufacturers Standardization Society of the Valve and Fittings Industry) - Pipe Hangers and Supports - Fabrication and Installation Practices.

G. SMACNA – Seismic Restraint Manual.

1.3 SUBMITTALS

A. Comply with pertinent provisions of SUBMITTALS Section 01330 of DIVISION 1 - GENERAL REQUIREMENTS of these Specifications.

B. Shop Drawings: Indicate system layout with location and all pipe supports, hangers, guides and anchors.

C. Product Data: Submit manufacturers catalog data including load capacity.

D. Design Data: Indicate load carrying capacity of trapeze, multiple pipe, and riser support hangers.

E. Manufacturer's Installation Instructions: Submit special procedures and assembly of components.

F. Manufacturer's Certificate: Certify that products meet or exceed specified requirements.

1.4 QUALITY ASSURANCE

A. Perform Work in accordance with applicable authority code for piping support.

B. Maintain one copy of each document on site.

1.5 QUALIFICATIONS

A. Manufacturer: Company specializing in manufacturing products specified in this section with minimum three years documented experience.

B. Installer: Company specializing in performing Work of this section with minimum three years documented experience approved by manufacturer.

1.6 PRE-INSTALLATION MEETING

A. Division 1 - Project Meetings: Pre-installation meeting.

B. Convene minimum one week prior to commencing Work of this section.

1.7 FIELD MEASUREMENTS

A. Verify field measurements prior to fabrication.

1.8 WARRANTY

A. Section 01611 - Guaranty/Warranty.

B. Provide five-year manufacturer warranty for pipe hangers and supports.

PART 2 - PRODUCTS

2.1 PIPE HANGERS AND SUPPORTS

A. Manufacturers:

1. Carpenter & Paterson Inc.
2. Globe Pipe Hanger Products Inc.
3. Superior Valve Co.
4. Substitutions: Section 01630 – Substitutions and "or equal" submittal.

B. Plumbing Piping - DWV:

1. Conform to ASME B31.9.
2. Hangers for Pipe Sizes to 1-1/2 inch: Malleable iron, adjustable swivel, split ring.
3. Hangers for Pipe Sizes 2 inches and Over: Carbon steel, adjustable, clevis.
4. Multiple or Trapeze Hangers: Steel channels with welded spacers and hanger rods.

5. Wall Support for Pipe Sizes to 3 inches: Cast iron hook.

6. Wall Support for Pipe Sizes 4 inches and Over: Welded steel bracket and wrought steel clamp. Bolt clamp securely to pipe, reset clamp end section on building structure.

7. Vertical Support: Steel riser clamp.

8. Floor Support: Cast iron adjustable pipe saddle, lock nut, nipple, floor flange, and concrete pier or steel support.

9. Copper Pipe Support: Copper-plated, carbon-steel adjustable, ring.

C. Plumbing Piping - Water:

1. Conform to ASME B31.9.

2. Hangers for Pipe Sizes to 1-1/2 inches: Malleable iron, adjustable swivel, split ring.

3. Hangers for Cold Pipe Sizes 2 inches and Over: Carbon steel, adjustable, clevis.

4. Multiple or Trapeze Hangers: Steel channels with welded spacers and hanger rods.

5. Wall Support for Pipe Sizes to 3 inches: Cast iron hook.

6. Wall Support for Pipe Sizes 4 inches and Over: Welded steel bracket and wrought steel clamp.

7. Vertical Support: Steel riser clamp. . Bolt clamp securely to pipe, reset clamp end section on building structure.

8. Floor Support for Cold Pipe: Cast iron adjustable pipe saddle, lock nut, nipple, floor flange, and concrete pier or steel support.

9. Copper Pipe Support: Copper-plated, Carbon-steel ring.

D. Hydronic Piping:

1. Conform to ASME B31.9.

2. Hangers for Pipe Sizes to 1-1/2 inch: Malleable iron, adjustable swivel, split ring.

3. Hangers for Cold Pipe Sizes 2 inches and Over: Carbon steel, adjustable, clevis.

4. Hangers for Hot Pipe Sizes 2 to 4 inches: Carbon steel, adjustable, clevis.

5. Multiple or Trapeze Hangers: Steel channels with welded spacers and hanger rods.

6. Wall Support for Pipe Sizes to 3 inches: Cast iron hooks.

7. Wall Support for Pipe Sizes 4 inches and Over: Welded steel bracket and wrought steel clamp.

8. Vertical Support: Steel riser clamp.

9. Floor Support for Cold Pipe: Cast iron adjustable pipe saddle, lock nut, nipple, floor flange, and concrete pier or steel support.

10. Floor Support for Hot Pipe Sizes to 4 Inches (100 mm): Cast iron adjustable pipe saddle, lock nut, nipple, floor flange, and concrete pier or steel support.

11. Copper Pipe Support: Copper-plated, carbon steel ring.

2.2 ACCESSORIES

A. Hanger Rods: Mild steel threaded both ends, threaded on one end, or continuous threaded.

2.3 INSERTS

A. Inserts: Malleable iron case of galvanized steel shell and expander plug for threaded connection with lateral adjustment, top slot for reinforcing rods, lugs for attaching to forms; size inserts to suit threaded hanger rods.

2.4 FLASHING

A. Metal Flashing: 26 gage thick galvanized steel.

B. Metal Counter flashing: 22 gage thick galvanized steel.

C. Lead Flashing:

1. Waterproofing: 5 lb./sq. ft. sheet lead.

2. Soundproofing: 1 lb./sq. ft. sheet lead.

D. Flexible Flashing: 47 mil thick sheet butyl; compatible with roofing.

E. Caps: Steel, 22 gage minimum; 16 gage at fire resistant elements.

2.5 EQUIPMENT CURBS

A. Fabrication: Welded 18 gage galvanized steel shell and base, mitered 3 inch cant, variable step to match roof insulation, 1-1/2 inch thick insulation, factory installed.

2.6 SLEEVES

A. Sleeves for Pipes Through Non-fire Rated Floors: 18 gage thick galvanized steel.

B. Sleeves for Pipes Through Non-fire Rated Beams, Walls, Footings, and Potentially Wet Floors: Steel pipe or 18 gage thick galvanized steel.

C. Sleeves for Round Ductwork: Galvanized steel.

D. Sleeves for Rectangular Ductwork: Galvanized steel or wood.

E. Sealant: Acrylic; refer to Section 07920 – Joint Sealants.

PART 3 - EXECUTION

3.1 INSERTS

A. Provide inserts for placement in concrete forms.

B. Provide inserts for suspending hangers from reinforced concrete slabs and sides of reinforced concrete beams.

C. Provide hooked rod to concrete reinforcement section for inserts carrying pipe over 4 inches.

D. Where concrete slabs form finished ceiling, locate inserts flush with slab surface.

E. Where inserts are omitted, drill through concrete slab from below and provide through-bolt with recessed square steel plate and nut recessed into and grouted flush with slab.

3.2 PIPE HANGERS AND SUPPORTS

A. Support horizontal piping as scheduled.

B. Install hangers to provide minimum 6 inch space between finished covering and adjacent work.

C. Place hangers within 12 inches of each horizontal elbow.

D. Use hangers with 1-1/2 inch minimum vertical adjustment.

E. Support horizontal cast iron pipe adjacent to each hub, with 5 feet maximum spacing between hangers.

F. Support vertical piping at every floor. Support vertical cast iron pipe at each floor at hub.

G. Where several pipes can be installed in parallel and at same elevation, provide multiple or trapeze hangers.

H. Support riser piping independently of connected horizontal piping.

I. Provide copper plated hangers and supports for copper piping.

J. Design hangers for pipe movement without disengagement of supported pipe.

K. Prime coat exposed steel hangers and supports. Hangers and supports located in crawl spaces, pipe shafts, and suspended ceiling spaces are not considered exposed.

PIPING SUPPORT SCHEDULE - STEEL PIPE

Nominal Pipe Size	Inches	½	¾	1	1-1/2	2	2-1/2	3	3-1/2
Maximum Span Between Single Feet Pipe Supports	Feet	5	6	7	9	10	10	12	12
Minimum Rod Size	Inches	3/8	3/8	3/8	3/8	3/8	½	½	½
Nominal Pipe Size	Inches	4	6	8	10	12	14	16	18
Maximum Span Between Single Pipe Supports	Feet	14	16	16	18	20	17	14	12
Minimum Rod Size	Inches	5/8	¾	7/8	7/8	1	1	1-1/8	1-1/4

TUBING SUPPORT SCHEDULE-COPPER TUBING/PLASTIC PIPES

Nominal Pipe Size	Inches	½	¾	1	1-1/4	1-1/2	2	2-1/2	3	3-1/2	4
Maximum Span Between Single Pipe Supports	Feet	5	6	7	8	9	10	11	12	12	14
Minimum Rod Size	Inches	3/8	3/8	3/8	3/8	½	½	½	5/8	5/8	5/8

3.3 EQUIPMENT BASES AND SUPPORTS

A. Provide housekeeping pads of concrete, minimum 3-1/2 inches thick and extending 6 inches beyond supported equipment. Refer to Section 03300 – Cast-in-Place Concrete.

B. Provide templates, anchor bolts, and accessories for mounting and anchoring equipment.

C. Construct supports of steel members. Brace and fasten with flanges bolted to structure.

D. Provide rigid anchors for pipes after vibration isolation components are installed.

3.4 FLASHING

A. Provide flexible flashing and metal counterflashing where piping and ductwork penetrate weather or waterproofed walls, floors, and roofs.

B. Flash vent and soil pipes projecting 3 inches minimum above finished roof surface with lead worked 1 inch minimum into hub, 8 inches minimum clear on sides with 24 x 24 inches sheet

size. For pipes through outside walls, turn flanges back into wall and caulk, metal counter-flash, and seal.

C. Flash floor drains in floors with topping over finished areas with lead, 10 inches clear on sides with minimum 36 x 36 inches sheet size. Fasten flashing to drain clamp device.

D. Seal floor drains watertight to adjacent materials.

E. Provide acoustical lead flashing around ducts and pipes penetrating equipment rooms for sound control.

F. Provide curbs for mechanical roof installations 14 inches minimum high above roofing surface. Flash and counter-flash with sheet metal; seal watertight. Attach Counterflashing mechanical equipment and lap base flashing on roof curbs. Flatten and solder joints.

G. Adjust storm collars tight to pipe with bolts; caulk around top edge. Use storm collars above roof jacks. Screw vertical flange section to face of curb.

3.5 SLEEVES

A. Set sleeves in position in forms. Provide reinforcing around sleeves.

B. Size sleeves large enough to allow for movement due to expansion and contraction. Provide for continuous insulation wrapping.

C. Extend sleeves through floors 1 inch above finished floor level. Caulk sleeves.

D. Where piping or ductwork penetrates floor, ceiling, or wall, close off space between pipe or duct and adjacent work with fire stopping insulation and caulk airtight. Provide close fitting metal collar or escutcheon covers at both sides of penetration.

E. Install chrome plated steel escutcheons at finished surfaces.

END OF SECTION

THIS PAGE INTENTIONALLY LEFT BLANK

SECTION 15360
METERS AND GAGES

PART 1 - GENERAL

1.1 RELATED DOCUMENTS

A. Drawings and general provisions of Contract, including General and Supplementary Conditions and Division 1 Specification sections, apply to work of this section.

B. Requirements of the following Division 15 Sections apply to this section:

1. "Basic Mechanical Requirements."

2. "Basic Mechanical Materials and Methods."

3. "Basic Piping Materials and Methods."

1.2 SUMMARY

A. This Section includes the following types of meters and gages:

1. Temperature gages and fittings.

2. Pressure gages and fittings.

3. Flow meters.

B. Related Sections: The following sections contain requirements that relate to this section:

1. Division 17100 Section "Meters, General" for water meters.

C. Meters and gages furnished as part of factory-fabricated equipment are specified as part of equipment assembly in other Division 15 sections.

1.3 SUBMITTALS

A. General: Submit the following in accordance with conditions of Contract and Division 1 Specification Sections.

1. Product data for each type of meter and gage. Include scale range, ratings, and calibrated performance curves, certified where indicated. Submit meter and gage schedule showing manufacturer's figure number, scale range, location, and accessories for each meter and gage.

2. Product certificates signed by manufacturers of meters and gages certifying accuracies under specified operating conditions and products' compliance with specified requirements.

3. Maintenance data for each type of meter and gage for inclusion in Operating and Maintenance Manuals specified in Division 1 and Division 15 Section "Basic Mechanical Requirements."

1.4 QUALITY ASSURANCE

A. UL Compliance: Comply with applicable UL standards pertaining to meters and gages.

B. ASME and ISA Compliance: Comply with applicable portions of ASME and Instrument Society of America (ISA) standards pertaining to construction and installation of meters and gages.

PART 2 - PRODUCTS

2.1 MANUFACTURERS

A. Available Manufacturers: Subject to compliance with requirements, manufacturers offering products that may be incorporated in the Work include but are not limited to the following:

1. Pressure Gages:

a. Marsh Instrument Co., Unit of General Signal.
b. Trerice (H.O.) Co.
c. Weiss Instruments, Inc.

2. Pressure Gage Accessories: Same as for pressure gages.

2.2 PRESSURE GAGES

A. Type: General use, ASME B40.1, Grade A, phosphor bronze bourdon- tube type, bottom connection.

B. Case: Drawn steel or brass, glass lens, 4-1/2-inches diameter.

C. Connector: Brass, 1/4-inch NPS.

D. Scale: White coated aluminum, with permanently etched markings.

E. Accuracy: Plus or minus 1 percent of range span.

F. Range: Conform to the following:

1. Vacuum: 30 inches Hg to 15 psi.

2. All fluids: 2 times operating pressure.

2.3 PRESSURE GAGE ACCESSORIES

A. Syphon: 1/4-inch NPS straight coil constructed of brass tubing with threads on each end.

B. Snubber: 1/4-inch NPS brass bushing with corrosion-resistant porous metal disc. Disc material shall be suitable for fluid served and rated pressure.

2.4 FLOW METERS, GENERAL

A. Flow rate of elements and meters shall be same as connected equipment or system.

2.5 METERS

A. Permanently Mounted Meters: Suitable for mounting on wall or bracket, 6-inch dial or equivalent with fittings and copper tubing for connecting to flow element.

B. Scale shall be in gpm unless otherwise indicated.

C. Accuracy: Plus or minus 1 percent between 20 to 80 percent of range.

D. Portable Meters: Differential-pressure gage and two 12-foot hoses in carrying case with handle.

E. Scale: In inches of water unless otherwise indicated.

F. Accuracy: Plus or minus 2 percent between 20 to 80 percent of range.

G. Each meter shall be complete with operating instructions.

2.6 TEST PLUGS

A. Test Plugs shall be nickel-plated brass body, with 1/2-inch NPS fitting and 2 self-sealing valve-type core inserts, suitable for inserting a 1/8-inch O.D. probe assembly from a dial-type thermometer or pressure gage. Test plug shall have gasketed and threaded cap with retention chain and body of length to extend beyond insulation. Pressure rating shall be 500 psig.

B. Core Material: Conform to the following for fluid and temperature range:

1. Air, Water, Oil, and Gas, 20 to 200 deg F (minus 7 to 93 deg C): Neoprene.

2. Air and Water, minus 30 deg to 275 deg F (minus 35 to 136 deg C): EPDM.

C. Test Kit: Provide test kit consisting of 1 pressure gage, gage adapter with probe, 2 bimetal dial thermometers, and carrying case.

D. Ranges of pressure gage and thermometers shall be approximately 2 times systems operating conditions.

PART 3 - EXECUTION

3.1 INSTALLATION OF PRESSURE GAGES

A. Install pressure gages in piping tee with pressure gage valve, located on pipe at most readable position.

B. Install in the following locations, and elsewhere as indicated:

1. At suction and discharge of each pump.

2. At discharge of each pressure-reducing valve.

3. At building water service entrance.

C. Pressure Gage Needle Valves: Install in piping tee with snubber. Install syphon in lieu of snubber for steam pressure gages.

3.2 INSTALLATION OF FLOW-MEASURING ELEMENTS AND METERS

A. General: Install flow meters for piping systems located in accessible locations at most readable position.

B. Locations: Install flow measuring elements and meters in the following locations and elsewhere as indicated.

1. At discharge of each pump.

2. At inlet of each hydronic coil.

C. Differential-Pressure-Type Flow Elements: Install minimum straight lengths of pipe upstream and downstream from element as prescribed by the manufacturer's installation instructions.

D. Install wafer orifice-type element between 2 Class 125 pipe flanges, ANSI B16.1 (cast iron) or ANSI B16.24 (bronze).

E. Install connections for attachment to portable flow meters in a readily accessible location.

F. Meters For Use With Flow Elements: Install meters on wall or bracket in accessible location.

G. Install connections, tubing, and accessories between flow elements and meters as prescribed by the manufacturer's installation instructions.

H. Window Flow Meters: Install in vertical upward position with impact tube mounted in bushing centered on pipe with 10 pipe diameters upstream and 5 pipe diameters downstream of straight unrestricted piping for 1-1/4 inches and smaller, 20 pipe diameters upstream and 10 pipe diameters downstream for 1-1/2 inches and larger. Calibrate meter after installation in accordance with manufacturer's installation instructions.

I. BTU Meters: Install in piping where indicated in hydronic supply line. Install thermal well in return line for remote sensor. Mount meter on wall if accessible; if not, provide bracket to support meter.

3.3 ADJUSTING AND CLEANING

A. Adjusting: Adjust faces of meters and gages to proper angle for best visibility.

B. Cleaning: Clean windows of meters and gages and factory-finished surfaces. Replace cracked and broken windows, and repair scratched and marred surfaces with manufacturer's touch-up paint.

3.4 CONNECTIONS

Piping installation requirements are specified in other sections of Division 15. The drawings indicate the general arrangement of piping, fittings, and specialties. The following are specific connection requirements:

1. Install meters and gages piping adjacent to machine to allow servicing and maintaining of machine.

END OF SECTION

THIS PAGE INTENTIONALLY LEFT BLANK

SECTION 15610
PIPING, GENERAL

PART 1 - GENERAL

1.1 THE REQUIREMENT

A. It shall be the responsibility of the CONTRACTOR to furnish and install all piping systems specified herein and shown on the contract drawings. Each system shall be installed complete with all applicable fittings, hangers, supports, anchors, expansion joints, flexible connections, valves, and accessories to provide a functional system as designed. In addition, all insulation, lining and coating, testing, disinfection, excavation, backfill and encasement shall be the responsibility of the CONTRACTOR.

B. The CONTRACTOR shall provide all tools, equipment, materials, and supplies necessary and shall perform all labor necessary to complete the work specified herein and indicated on the drawings. The CONTRACTOR shall provide all testing apparatus necessary to perform testing as required by the contract documents. The CONTRACTOR shall provide any equipment necessary for inspection of and testing of piping systems specified.

C. Piping shown on drawings and specified herein is intended to define the general layout, configuration, routing, required method of support, pipe size and type only. It is the responsibility of the CONTRACTOR to provide a complete system in accordance with the contract drawings and requirements set forth herein. All details necessary to provide a complete system as specified herein are the responsibility of the CONTRACTOR. The CONTRACTOR shall provide all spools, spacers, adapters, connectors, and supports necessary to provide a complete and functional system. The CONTRACTOR shall furnish pipe supports, hangers, anchors, etc., in addition to those shown on the contract drawings, when necessary to provide a system as specified herein. The CONTRACTOR shall provide lay-out drawings of all piping systems prior to installation showing all piping, equipment, accessories, supports, etc.

1.2 RELATED WORK SPECIFIED ELSEWHERE

A. Division 02 as applicable. Site Work.

B. Section 02310 - Earthwork.

C. Section 02515 - Water Pipeline Testing and Disinfection.

D. Section 03300 -Cast-in-Place Concrete.

E. Section 05500 - Miscellaneous Metalwork.

F. Section 09800 - Protective Coating.

G. Division 15 as applicable. Mechanical.

H. Section 15615 - Valves, General.

I. Section 15620 - Pipe Systems Testing.

1.3 REFERENCE SPECIFICATIONS, CODES, AND STANDARDS

A. Comply with the reference specifications of the GENERAL REQUIREMENTS.

B. Commercial Standards:

ANSI/ASME B1.20.1	Pipe Threads, General Purpose (inch).
ANSI B16.5	Pipe Flanges and Flanged Fittings, Steel Nickel Alloy and other Special Alloys.
ANSI/AWWA C207	Steel Pipe Flanges for Water Works Service, Sizes 4 in through 144 in.
ANSI/AWWA C606	Grooved and Shouldered Joints.
ANSI/AWS D1.1	Structural Welding Code.
ASTM A 307	Specification for Carbon Steel Bolts and Studs, 6,000 psi Tensile.
ASTM A 325	Specification for High-Strength Bolts for Structural Steel Joints.
ASTM D 792	Test Methods for Specific Gravity and Density of Plastics by Displacement.
ASTM D 2000	Classification System for Rubber Products in Automotive Applications.

1.4 CONTRACTOR SUBMITTALS

A. The CONTRACTOR shall complete shop drawings of all piping systems, equipment, accessories, and supports in accordance with SUBMITTALS of the GENERAL REQUIREMENTS. The shop drawings shall include all necessary dimensions and details on pipe joints, fittings, fitting specials, valves, appurtenances, design calculations, and material lists. The submittals shall include detailed layout, spool, or fabrication drawings which show all pipe spools, spacers, adapters, connectors, fittings, and pipe supports necessary to accommodate the equipment and valves provided in a complete and functional system. The CONTRACTOR shall submit detailed LAY-OUT drawings of all systems for approval prior to starting installation. LAY-OUT drawings shall include all dimensions and spacings for pipe joints, fittings, fitting specials, valves, appurtenances, connectors, adapters, supports, hangers, anchors, etc. necessary to provide a complete and functional system as specified herein.

B. All expenses incurred in making samples for certification of tests shall be borne by the CONTRACTOR.

C. The CONTRACTOR shall submit as part of the shop drawings a statement from the pipe fabricator certifying that all pipes will be fabricated subject to a recognized Quality Control Program. An outline of the program shall be submitted to the ENGINEER for review prior to the fabrication of any pipe.

1.5 QUALITY ASSURANCE

A. Inspection: All pipe shall be subject to inspection at the place of manufacture. During the manufacture of the pipe, the INSPECTOR shall be given access to all areas where

manufacturing is in progress and shall be permitted to make all inspections necessary to confirm compliance with the Specifications.

B. Material Testing: The INSPECTOR shall have the right at any time to call for and witness the making of test specimens by any welder in accordance with these specifications. Any and all tests shall be at the CONTRACTOR'S expense. The CONTRACTOR shall furnish the ENGINEER 3(three) certified copies of mill test reports. Mill test reports shall show results of the chemical and physical tests made on each melt of steel representing the steel plate furnished for the manufacture of the pipe.

C. Specimen Plates: The INSPECTOR may require the CONTRACTOR to furnish specimen plates of the steel to be used in the fabrication of the pipe. Specimen plates shall be large enough to provide the number of test specimens required. Should any test specimen fail to meet the requirements of the plate specification, a second specimen plate of the same heat number shall be furnished. Should any one test specimen from the second plate fail, then all plates furnished from the same heat number will be rejected. Tests of these specimens will be made by an Independent Laboratory approved by the ENGINEER. The CONTRACTOR will be responsible for all expenses incurred in making the tests.

D. Required Tests: Specimen Plates shall be tested as follows:

1. Reduced Section Tensile Test: The yield point and ultimate tensile strength shall not be less than the minimum of the specified tensile range of the plate used.

2. Guided Bend Test: Bend tests shall be performed on both root and face weld specimens. The specimen shall be bent cold without fracture 180 degrees around a pin or mandrel, having a diameter 3 times the thickness of the plate, and shall show an elongation of not less than 20 percent across the weld.

3. Radiographic Test: A 4-1/2" by 17" spot x-ray shall be taken at a location as directed by the INSPECTOR. Procedures and interpretation shall be in accordance with ASME Boiler and Pressure Vessel Code, Section 8, Division I, Part UW51, with the exception that ASTM E94, Type I, industrial radiographic film shall be used.

E. Porosity: The maximum acceptable porosity shall be as set forth in Appendix IV of the ASME Boiler and Pressure Vessel Code.

F. Retest of Welds: Should any of the tests taken from a shift's production fail to meet any of the requirements of these specifications, one additional set of weld tests shall be made from each of the adjoining pipe sections. Retest of welds shall be performed at the CONTRACTOR'S expense, and shall be made and approved before beginning the next shift's production. Should any retest result in failure to meet any of the requirements of these specifications, all pipe sections of that shift's production will be rejected.

G. Welding Procedures: Welding procedure specifications shall be furnished to the ENGINEER for approval prior to the welding of pipe. The specifications shall specify, on a form equivalent to the ASME welding procedure form, the type of plate edge preparation, welding method, arc-voltage, arc-amperes, travel speed, wire size and type, flux type, and all other procedures necessary to make the weld.

H. Welder Qualifications: All welders and welding operators shall be qualified under the applicable provisions of the standard qualification procedure of the ASME Boiler and Pressure Vessel Code, Section IX.

1.6 MANUFACTURER'S SERVICE REPRESENTATIVE

A. Where the assistance of a manufacturer's service representative is advisable, in order to obtain perfect pipe joints, supports, or special connections, the CONTRACTOR shall furnish such assistance at no additional cost to the CITY.

1.7 MATERIAL DELIVERY, STORAGE, AND PROTECTION

A. All piping materials, fittings, valves, and accessories shall be delivered in a clean and undamaged condition and stored off the ground, to provide protection against oxidation caused by ground contact. All defective or damaged materials shall be replaced with new materials.

1.8 CLEANUP

A. After completion of the work, all remaining pipe cuttings, joining and wrapping materials, and other scattered debris, shall be removed from the site. The entire piping system shall be handed over in a clean and functional condition.

PART 2 - PRODUCTS

2.1 GENERAL

A. All pipes, fittings, and appurtenances shall be furnished in accordance with the requirements of the applicable Sections of Divisions 02 and 15 and as specified herein.

B. Pipe Supports: All pipes shall be adequately supported in accordance with the requirements of Section 15340 - Hangers and Supports, and as shown.

C. Lining: All requirements pertaining to thickness, application, and curing of pipe lining, are in accordance with the requirements of the applicable Sections of Division 02, unless otherwise specified.

D. Coating: All requirements pertaining to thickness, application, and curing of pipe coating, are in accordance with the requirements of the applicable Sections of Division 02, unless otherwise specified. Pipes above ground or in structures shall be coated in accordance with Section 09800 - Protective Coating.

E. Pressure Rating: All piping systems shall be designed for the maximum expected pressure as defined in Section 02515 - Water Pipeline Testing and Disinfection or as shown on the piping schedule.

F. Grooved Piping Systems: Piping systems with grooved joints and fittings may be provided in lieu of screwed, flanged, welded, or mechanical joint systems for steel and ductile iron yard piping, subject to approval of the ENGINEER. (Applicable to all piping above and below ground within the property limits of treatment plants, pump stations, and similar installations). All grooved couplings on buried piping must be bonded. To assure uniform and compatible piping components, all grooved fittings, couplings, and valves shall be from the same manufacturer.

G. Fasteners: Whenever stainless steel bolts are specified, it shall mean that all bolts, nuts and washers shall be made of Type 316 stainless steel, unless otherwise noted.

2.2 PIPE FLANGES

A. Flanges: Where the design pressure is 150 psi or less, flanges shall conform to either ANSI/AWWA C207 Class D or ANSI B16.5 150-lb class. Where the design pressure is greater than 150 psi, up to a maximum of 275 psi, flanges shall conform to either ANSI/AWWA C207 Class E, Class F, or ANSI B16.5 150-lb class. Where the design pressure is greater than 275 psi up to a maximum of 700 psi, flanges shall conform to ANSI B16.5 300-lb class. Flanges shall have either flat faces or raised faces and shall be attached with bolt holes straddling the vertical axis of the pipe unless otherwise shown. Attachment of the flanges to the pipe shall conform to the applicable requirements of ANSI/AWWA C207 or ANSI B16.5. Flanges for miscellaneous small pipes shall be in accordance with the standards specified for these pipes.

B. Blind Flanges: Blind flanges shall be in accordance with ANSI/AWWA C207 or ANSI B16.5, or with the standards for miscellaneous small pipes. All blind flanges for pipe sizes 12-inches and larger shall be provided with welded or screwed eye bolts.

C. Flange Coating: All machined faces of metal blind flanges and pipe flanges shall be coated with a temporary rust-inhibitive coating to protect the metal until the installation is completed.

D. Flange Bolts: All shall conform to ASTM A193; AISI Type 316 Stainless Steel, ANSI B18.2.1. Bolts shall be of such length that after installation, bolts will project 1/8 to 3/8 inch beyond the fact of the nut. No "all-thread" studs will be allowed. Flange Nuts: All shall conform to ASTM A194, AISI Type 316 Stainless Steel, ANSI B18.2.2, heavy hex pattern.

E. Insulating Flanges: Insulating flanges shall be used for joining flanged piping of dissimilar metals and for piping systems where corrosion or cathodic protection is involved. Insulated flanges shall have bolt holes 1/4-inch diameter greater than the bolt diameter.

F. Insulating Flange Sets: Insulating flange sets shall be provided where shown and where necessary to prevent contact between dissimilar metals. Each insulating flange set shall consist of an insulating gasket, insulating sleeves and washers and a steel washer. Insulating sleeves and washers shall be one piece when flange bolt diameter is 1-1/2-inch or smaller and shall be made of acetal resin. For bolt diameters larger than 1-1/2-inch, insulating sleeves and washers shall be 2-piece and shall be made of polyethylene or phenolic. Steel washers shall be in accordance with ASTM A 325. Insulating gaskets shall be full-face.

    1. Manufacturers:

        a. JM Red Devil, Type E;
        b. Maloney Pipeline Products Co., Houston;
        c. PSI Products, Inc., Burbank, California;
        d. Or equal.

G. Flange Gaskets: Gaskets for flanged joints shall be full-faced, 1/16-inch thick compressed sheets of aramid fiber base, with nitrile binder and non-stick coating, suitable for temperatures to 700 degrees F, a pH of one to eleven, and pressures to 1,000 psig. Blind flanges shall have gaskets covering the entire inside face of the blind flange and shall be cemented to the blind flange. Ring gaskets shall not be permitted:

    Water Service: Gaskets shall be ASTM D1330, GRADE I, red rubber with 1/8 inch minimum thickness and dimensions to suit contact facing.

Oil Service: Gaskets shall be ANSI B16.21, non-asbestos filler with neoprene or nitrile binder, 1/16 inch minimum thickness for plain finished surfaces and 3/32 inch minimum thickness for serrated surfaces.

Flat Face Flanges: Gaskets shall be ANSI B16.21, non-asbestos filler with neoprene or nitrile binder, 1/16 inch minimum thickness for plain finished surfaces and 3/32 inch minimum thickness for serrated surfaces.

Raised Face Flanges: Gaskets shall be continuous Stainless Steel ribbon wound into a spiral with non-asbestos filler between adjacent coils with a carbon steel gage ring. Compressed gasket thickness shall be 0.0095 inch -/+0.005 inch.

4. Manufacturers:

    a. John Crane, style 2160;
    b. Garlock, style 3000;
    c. Or equal.

H. All flanges are subject to inspection and testing at the discretion of the INSPECTOR.

2.3 THREADED INSULATING CONNECTIONS

A. General: Threaded insulating bushings, unions, or couplings, as appropriate, shall be used for joining threaded pipes of dissimilar metals and for piping systems where corrosion control or cathodic protection are involved.

B. Materials: Threaded insulating connections shall be of nylon, Teflon, polycarbonate, polyethylene, or other nonconductive materials, and shall have ratings and properties to suit the service and loading conditions.

2.4 GROOVED END COUPLINGS

A. General: Grooved End Couplings shall be provided where shown. The couplings shall conform to the requirements of ANSI/AWWA C606, "flexible" grooving for buried piping, or "rigid" grooving for above ground piping and gallery piping inside structures.

Gaskets: Shall be halogenated butyl rubber suitable for the service intended and designed for use with the specified pipe material.

Couplings: Shall be ductile iron conforming to ASTM A536; with Type 316 Stainless Steel bolts, ASTM A193, Grade B-8, Class 2, in buried locations and heat-treated track-head bolts conforming to ASTM A183, minimum tensile 110,000 psi for above ground piping and gallery piping inside structures.

The wall thickness of all grooved piping shall be as specified.

B. Steel Pipe Coupling Manufacturers:

1. Gustin-Bacon (banded or grooved);

2. Victaulic Style 41 or 44 (banded);

3. Victaulic Style 77 or 07 (grooved);

4. Or equal.

C. Ductile Iron Pipe Coupling Manufacturers:

1. Gustin-Bacon;

2. Victaulic Style 31;

3. Or equal.

Note: Ductile iron pipe couplings shall be furnished with flush seal gaskets.

D. PVC Pipe Coupling Manufacturers:

1. Gustin-Bacon;

2. Victaulic, Style 77 or 75;

3. Or equal.

Note: Couplings for PVC pipe shall be furnished with radius cut or standard roll grooved pipe ends.

2.5 SLEEVE-TYPE COUPLINGS

A. Construction: Sleeve-type couplings shall be of steel construction with steel bolts, and of sizes to fit the pipe and fittings. The middle ring shall be not less than 1/4-inch in thickness and 5 or 7-inches long for standard couplings, and 16-inches long for long-sleeve couplings. The followers shall be single-piece contoured mill section welded and cold-expanded to fit for the middle rings. They shall be of sufficient strength to accommodate the number of bolts necessary to obtain adequate gasket pressures without excessive rolling. The shape of the follower shall be designed as to provide positive confinement of the gasket. Bolts and nuts shall be Type 316 Stainless Steel in buried locations and heat-treated Grade 5 or better for above ground piping and gallery piping inside structures. Buried sleeve-type couplings shall be factory-applied epoxy-coated as specified in Section 09800 - Protective Coating.

B. Pipe Preparation: The ends of the pipe shall be prepared to fit steel couplings. Plain ends for use with couplings shall be smooth and round for a distance of 12-inches from the ends of the pipe, with outside diameter not more than 1/64-inch smaller than the nominal outside diameter of the pipe. The middle ring shall be tested by cold-expanding a minimum of one percent beyond the yield point, to proof-test the weld to the strength of the parent metal. The weld of the middle ring shall be subjected to air test for porosity.

C. Gaskets: Gaskets for sleeve-type couplings shall be rubber-compound material that will not deteriorate from age or exposure to air under normal storage or use conditions. Gaskets for wastewater and sewerage applications shall be Buna "N," Grade 60, or equivalent suitable elastomer. The rubber in the gasket shall meet the following specifications:

1. Color - Jet Black.

2. Surface - Non-blooming.

3. Durometer Hardness - 74 +/- 5.

4. Tensile Strength - 1,000 psi minimum.

5. Elongation - 175 percent minimum.

D. The gaskets shall be immune to attack by impurities normally found in water or wastewater. All gaskets shall meet the requirements of ASTM D 2000, AA709Z, meeting Suffix B13 Grade 3, except as noted above. All gaskets shall be compatible with the piping service and fluid utilized.

E. Insulating Couplings: Where insulating couplings are required, both ends of the coupling shall have a wedge-shaped gasket which assembles over a rubber sleeve of an insulating compound in order to obtain complete insulation of all coupling metal parts from the pipe.

F. Restrained Joints: Restrained joints for sleeve-type couplings shall be in accordance with AWWA M-11.

G. Manufacturers:

1. Dresser, Style 38;

2. Ford Meter Box Co., Inc., Style FC1 or FC3;

3. Smith-Blair, Style 411;

4. Or equal.

2.6 FLEXIBLE CONNECTORS

A. Flexible connectors shall be installed in all piping connections to engines, blowers, compressors, and other vibrating equipment, and where shown. Flexible connectors shall be flanged, braided stainless steel spools with inner, annular, corrugated stainless steel hose, rated for minimum 150 psi working pressure, unless otherwise shown. The connectors shall be minimum of 9-inches long, face-to-face flanges, unless otherwise shown. The CONTRACTOR shall submit manufacturer's shop drawings and calculations.

2.7 EXPANSION JOINTS

A. All piping subject to expansion and contraction shall be provided with expansion joints to compensate for movement, without exertion of undue forces to equipment or structures. Expansion joints shall be of stainless steel, monel, rubber, or other materials, suitable for each individual service. The CONTRACTOR shall submit detailed calculations and manufacturer's shop drawings and information on materials, temperature and pressure ratings.

2.8 PIPE THREADS

A. All pipe threads shall be in accordance with ANSI/ASME B1.20.

2.9 AIR AND GAS TRAPS

A. Air and gas pipes shall be installed with continuous slope towards the low points. Drip legs shall be provided with shut-off valves, strainers and traps. The traps shall be piped to the nearest drain. Air and gas traps shall be not less than 150-lb iron body float type with copper or stainless steel float suitable for the service. Bracket, lever, and pins shall be of stainless steel. Drain traps shall have threaded connections.

B. Manufacturers:

1. Armstrong Machine Works;

2. Spirax Sarco, Inc;

3. Or equal.

2.10 GLASS LINING

A. General: Ductile iron or steel pipe and fittings shall be glass-lined where shown or specified. The glass lining shall be suitable for handling sewage, primary sludge, digested sludge, and scum. It shall be smooth, continuous, and suitable for prevention of grease and foam build-up. The glass lining shall be capable of withstanding thermal shock of 350 degrees F (430 degrees to 80 degrees) without crazing, blistering, or spalling.

B. Criteria: The glass lining shall consist of a vitreous material to meet or exceed the following criteria:

1. Unaffected by scraping with a sharp knife, simulating the effects of rodding.

2. Unaffected by the continuous application of live steam from a steam generator, immediately followed by a cold water quench.

3. Unaffected by an 8 percent sulfuric acid solution at 148 degrees F for a ten-minute period.

4. Minimum thickness: 10 mils by micro test.

5. Spark tested: Surface must be free of pinholes.

6. Hardness: 5-6 Mohs.

7. Density: 2.5-3.0 g/cu cm, measured by ASTM D 792.

C. Application: Cast or ductile iron pipes and fittings shall be bored or machined smooth to remove voids or protrusions. Steel pipe shall be seamless pipe, with all internal fitting welds ground smooth, slag holes ground out, re-welded, and ground smooth. All interior surfaces to be grit blasted to white metal and lining to be fused on to chemically clean metal at above 1,400 degrees F. All welded flanges shall be factory-installed before lining. Screwed flanges or cast and ductile iron pipes shall be installed after lining. All pieces shall be sealed and tested prior to shipment. Finish shall be subject to the INSPECTOR'S approval.

D. Manufacturers:

1. Pfaudler Co, Inc., Rochester, New York;

2. A.O. Smith Corp., Florence, Kentucky;

3. Waterworks, Inc., Yuba City, California;

4. Or equal.

2.11 PIPE SLEEVES

A. Where specified or as indicated on the contract drawings, pipe sleeves shall be provided for piping passing through concrete or masonry walls.

B. Pipe sleeves shall be Type 316L stainless steel with a welded water-stop ring.

2.12 PLASTIC CHEMICAL PIPING

A. The primary carrier piping for the various chemical systems shall consist of the following materials:

Line	Systems						
	Ammonium Hydroxide	Citric Acid	Sodium Bisulfite	Sodium Hydroxide	Sodium Hypochlorite	Sulfuric Acid	Ferric Chloride and Ferrous Chloride
Pipe	PVC or PP	PVC or PP	PVC or PP	PVC or PP	CPVC	PVDF	CPVC

B. All chemical piping shall be installed so that lines are readily accessible for cleaning.

C. At all exposed changes in direction in chemical piping, tees shall be provided with extra threaded openings plugged to facilitate cleaning.

1. Thread tape or thread sealer shall be applied to the threads of all plugs to facilitate ease of removal.

2.13 DOUBLE CONTAINMENT FOR PLASTIC CHEMICAL - PIPING

A. Secondary Containment shall be used for all chemical systems outside of the diked chemical storage areas.

B. Double containment shall consist of an assembled inner-centered pipe within a secondary outer pipe, fabricated by adhesive joining or butt fusion, or a co-extruded one piece double containment pipe.

C. The assembled double-containment system secondary pipe shall be constructed of poly-vinyl chloride (PVC) or polypropylene (PP) pipe for outdoor applications. These systems shall be joined to provide a minimum of 150 psig at 73^0 F leak-free seals. The outer piping shall be painted in accordance with Section 09800 - Protective Coatings and Section 15780 - Piping Identification Systems.

1. All assembled double-containment piping and fittings shall be supplied by the same source to insure material and system compatibility. The carrier and containment pipe and fittings shall be Schedule 80 X Schedule 40 and shall be factory assembled with centralizing and anchoring devices installed.

D. The co-extruded one piece double containment pipe system shall conform to the following:

1. Material: Pipe and fittings shall be manufactured from Type II Copolymer, polypropylene material as described in ASTM D 4101. Pipe and fittings manufactured from the BE 50 Resin will not be acceptable under any circumstances.

2. Pipe and Fittings - Construction: Pipe shall be co-extruded one piece double containment pipe. The primary pipe shall be integral with the secondary pipe via connecting ribs which are continuous down the entire length of each section of pipe. Fittings shall be a molded unitary double wall fitting. Permanent alignment of the inner and outer fittings shall be maintained via molded-in ribs. Piping and fittings components shall be manufactured to SDR dimensions.

3. Pressure Rating: Pipe and fittings shall be rated for 150 PSI in all sizes and materials at 73 degrees F.

4. Factory Welded Joints: Factory joints shall be either made by butt fusion or extrusion welding. Joining by means of solvent cement, and fillet welding is prohibited.

5. Site Joints: site joints shall be made utilizing butt fusion only.

6. Installation: Installation shall be in accordance with the drawings, the manufacturer's recommendations. The entire installation shall be installed in proper alignment and free of stress. Sufficient stainless steel leaders shall be such that all mains and branches can be provided with a leak detection system.

7. Testing: The system shall be tested in accordance with the manufacturer's recommendations.

E. Secondary containment shall be provided with 3/4 inch schedule 80 plastic pipe at low points and field-routed to the nearest diked containment and/or sump which would be compatible to accept the chemical being discharged.

PART 3 - EXECUTION

3.1 GENERAL

A. All piping and appurtenances shall be installed in accordance with the requirements of all applicable and related Divisions of these specifications.

B. Any deviation from lines, grades, or elevations shown on the Contract Drawings must be approved in writing by the ENGINEER.

C. Where core drilling is required for pipes passing through existing concrete, all core drilling locations shall be determined by radiograph of the concrete construction to avoid damage to embedded raceways, conduits, and reinforcing steel.

D. Prior to any core drilling of existing concrete, the CONTRACTOR shall obtain approval of all locations, in writing, from the ENGINEER.

3.2 HANDLING

A. All pipe, fittings, and related appurtenances shall be handled in a manner that will insure installation in sound, undamaged, like new condition.

B. Pipe and fittings with cement mortar or epoxy lining or special coatings shall be handled with rubber covered hooks, or other type of equipment to prevent damage.

C. Bare fork lift arms, hooks, cables, or chains shall not be used for handling pipe with special lining or coating.

D. Pipe and fittings in which the lining or coating has been damaged shall be immediately removed from the job site and replaced.

1. In instances where damage is minimal, the CONTRACTOR may, with approval from the ENGINEER, have the damage repaired by a qualified representative of the pipe manufacturer or fabricator.

3.3 STORAGE

A. All pipes shall be stored off the ground at all times, even during installation.

B. Store coated pipe on "extra wide" skids to protect the coating.

C. PVC pipe shall be stored out of direct sunlight to prevent damage and premature deterioration.

D. Pipe with special coatings shall be stored out of direct sunlight to prevent damage to coating.

E. Copper and galvanized pipe shall be covered or stored indoors.

F. Threaded ends of pipe shall be covered to protect the threads.

G. Flanged pipe shall have the flange faces protected.

H. Pipe that has become damaged or unidentifiable due to improper storage shall be rejected and immediately removed from the job site.

3.4 CUTTING PIPE

A. Cutting of pipe shall be done in a neat manner, without damage to the pipe, pipe lining, or pipe coating.

B. Cuts shall be smooth, straight, and at right angles to the pipe axis.

C. Pipe shall be cut using a portable guillotine saw, abrasive wheel "cut-off" saw, or milling cutter only. Use of gas torches for cutting pipe will not be permitted.

1. Where it becomes necessary to cut steel pipe larger than 6" in diameter, the CONTRACTOR may, with written permission of the ENGINEER, use gas torch to cut the pipe.

2. Only a qualified pipe fitter or boiler-maker shall make any approved torch cuts of pipe.

D. Field cut holes for saddles shall be made utilizing a hole saw or other mechanical means. Gas torch cutting of holes will not be permitted.

E. After cutting, the end of the pipe shall be dressed with a file or power grinder to remove all internal and external burrs and sharp edges.

F. All damaged or removed lining or coating shall be repaired by a qualified representative of the pipe manufacturer or fabricator.

3.5 CLEANING

A. The interior of all pipe and fittings shall be thoroughly cleaned of all foreign matter prior to installation, and shall be kept clean until the work has been accepted.

B. Before jointing, all joint contact surfaces shall be wire brushed, wiped clean, and kept clean until the jointing is completed.

C. Flange faces shall be wire brushed and cleaned to remove all oil, grease, loose primer, mill scale, or any other foreign matter which could effect the proper seating of the gasket.

D. Prior to testing, pipe shall be thoroughly cleaned, flushed and/or purged in accordance with these specifications.

E. Cleaning of fresh and potable water lines shall be in accordance with these specifications, County of Los Angeles Health Department regulations, and shall be done under the supervision of the INSPECTOR and the Plant Fresh Water Supervisor.

F. Cleaning of weld joints and weld joint areas of stainless steel piping system, both before and after welding, shall conform to ASTM A380. Use only stainless steel brushes or stainless steel wool.

G. Finishing: Following fabrication of stainless steel piping connections, all weld areas shall be pickled to remove all mill scale, weld inclusions, and color, and passivated inside and out in conformance to ASTM A380.

H. Contractor shall submit the cleaning and passivation procedure of stainless steel piping system in compliance with the above requirements for ENGINEER's review and approval.

3.6 PURGING

A. The CONTRACTOR shall coordinate all purging with adjacent work under other contracts as necessary to preclude work interference or duplication of effort, and to eliminate any safety hazard to adjacent work.

B. All purging work shall be done in the presence of the INSPECTOR, and in accordance with these specifications and the latest revisions of applicable City of Los Angeles codes.

C. All existing valves shall be operated by the City Plant Personnel only.

D. The ENGINEER shall be notified of purging operations as indicated per General Requirements. The notification shall include a detailed purging plan which includes the following:

1. Method of purging and proposed procedure.

2. Required coordination.

3. Drawings or sketches of lines to be purged.

4. Sequence of operation.

5. Anticipated flow rate in standard cubic feet per minute (scfm) of vented gas to be purged.

6. Equipment to be used.

7. Proposed method of disposing of vented gases.

E. The CONTRACTOR shall provide all necessary piping connections, temporary piping, temporary valves, sampling taps, purge nitrogen, methane and oxygen monitoring apparatus, and all other items or equipment or material required to complete this work.

F. Pressure within the pipe shall be reduced to atmospheric pressure prior to beginning purging operations.

G. The pressure shall not exceed the normal operating pressure of the line being purged.

H. Unless otherwise approved in writing by the ENGINEER, vent gas containing digester/natural gas shall be disposed of in accordance with all applicable City, State, and Federal laws and regulations.

I. Other vent gases shall be piped outside of structures to the open atmosphere for disposal.

J. Pipelines Containing Digester/Natural Gas:

1. At least eight volume changes of Nitrogen gas shall be available for purging.

2. The CONTRACTOR shall utilize a combustible gas meter to determine the methane gas content in the vented gas.

3. The pipeline shall be purged until the residual methane in the vent gas is less than 1 percent.

Note: Following this purge, the piping is filled with Nitrogen, an asphyxiant. Proper ventilation must be provided if the pipe is opened.

K. Pipelines Containing Air:

1. Pipelines initially containing air, or pipelines which have been opened to atmosphere, shall be purged twice.

2. The first purge shall displace air with Nitrogen to minimize the explosive hazard of an oxygen-methane mixture.

a. At least five volume changes of Nitrogen gas shall be available for the first purge.
b. An oxygen meter shall be used to determine the oxygen content in the vented gas.
c. The pipeline shall be purged until the oxygen in the vent gas is less than 5 percent.
d. The purge rate shall not exceed the capacity of the pipeline.

3. The second purge shall displace the Nitrogen with Digester/Natural gas through the appliances or equipment to prevent supplying a noncombustible gas mixture to the equipment.

a. The product gas, digester or natural gas, shall be introduced into the pipeline for the second purge.
b. A combustible-gas meter shall be used to determine the methane gas content in the vented gas.

c. The pipeline shall be purged through the appliance/equipment until methane gas can sustain a stable flame.
d. The flow rate shall not exceed the capacity of the appliance/equipment.

L. After the piping has been purged, the CONTRACTOR shall notify the City, in writing, that the piping is ready to be placed in service.

M. City plant personnel will place the line in service.

3.7 PIPE SLEEVES

A. Unless otherwise specified or indicated on the contract drawings, pipes passing through concrete or masonry shall be installed through Type 316 stainless steel sleeves installed before concrete is placed or masonry is laid.

B. The CONTRACTOR shall be responsible for coordinating the installation of sleeves for all piping.

C. Pipe sleeves installed through floors provided with a special finish, such as ceramic tile, resilient tile, or seamless flooring, shall be flush with the finished floor surface, and shall be provided with nickel or chromium plated floor plates.

D. In all other locations where pipes pass through floors, pipe sleeves shall project 2" above the finished floor surface, with the projection uniform throughout each floor area.

E. In the case of insulated pipes, the insulation shall be carried through the pipe sleeve.

F. Where it is indicated on the contract drawings to provide for future installation of pipe, sleeves shall be provided and the ends sealed with an approved plastic cap/plug.

G. For piping passing through existing concrete or masonry floors or walls, core drilled holes will be accepted when approved in writing by the ENGINEER.

1. Any reinforcement which is cut while drilling holes in existing concrete or masonry must be coated with an approved epoxy coating prior to pipe being installed.

H. All pipes passing through interior concrete or masonry walls or slabs shall be caulked on both sides with approved caulking.

1. Caulking in fire-rated walls must be approved fire caulking of a color approved by the ENGINEER.

I. All pipes passing through walls or slabs which have one side exposed to the outside, have one side in contact with earth, or have one side exposed to a water bearing or water conveying structure, shall be sealed watertight by the use of modular casing seals ("link-seals") and be caulked on both sides of the wall or slab.

3.8 PIPE INSTALLATION

A. All piping shall be installed as specified, as indicated on the contract drawings and in a manner acceptable to the INSPECTOR.

B. The CONTRACTOR shall provide pipe cut from measurements made at the job site, and not from the contract drawings.

C. Provisions shall be made in laying out all piping throughout to provide for expansion and contraction.

D. Expansion joints or fittings shall be provided on all piping as specified or otherwise indicated on the contract drawings.

E. Piping shall not obstruct openings or passageways.

F. Piping shall be held free of any contact with building construction so as not to transmit noise.

G. All water, gas, and air supply piping at each fixture, or unit of equipment, shall be provided with an approved shutoff valve and union - WHETHER INDICATED ON THE CONTRACT DRAWINGS OR NOT - which will permit isolation and disconnection of each item without disturbing the rest of the system.

H. Air supply piping shall be provided with approved sectionalizing valves and valved air inlet connections as required for isolating portions of the system for periodic testing.

I. The gas supply line to each building shall be provided with an approved shutoff valve and union located above finish grade immediately outside the building. The gas shutoff valve shall have an approved, clearly visible, sign installed indicating "GAS SHUTOFF".

J. A union shall be provided within 2 feet of every threaded-end valve installed, unless there are other acceptable connections which will permit easy removal of the valve.

K. Unions shall also be provided in piping at locations adjacent to all devices or equipment which may require removal in the future, and at all locations specified or indicated on the contract drawings.

L. Non-pressure piping installed above electrical panels or cabinets shall be insulated and drip shields shall be installed to contain and channel any condensate or leakage away from the panels or cabinets.

M. Pressure piping shall not be installed above electrical panels or cabinets.

N. All air and digester gas piping shall be graded to points of drainage collection and approved drip legs and valve shall be installed.

O. Water supply piping within structures shall be arranged, and facilities provided, for complete drainage.

P. All piping serving metering equipment shall be uniformly graded so that air traps are eliminated and complete venting is provided.

Q. Seal water supply shall be piped to within 3 feet of the pumping unit seal box.

    1. Connection to the pump from the seal water piping shall be made using stainless steel tubing as specified.

R. Stuffing box leakage from water sealed pumps shall be piped to the nearest point of drainage collection.

    1. Seal water leakage shall not be allowed to free flow on the floor to the drainage collection point.

S. Taps for pressure gage connections on the suction and discharge sides of pumping units shall be provided with a nipple and an approved shutoff valve.

1. Drilling and tapping of pipe walls for installation of pressure gages or switches will not be permitted.

2. Taps shall be provided by factory threaded taps or a factory welded boss.

T. All branch connections in horizontal runs of air, gas, or steam piping shall be made from the top of the pipe.

U. In all piping, insulating fittings shall be provided to prevent contact of dissimilar metals wherever copper pipe, tubing, or fittings are connected to iron or steel pipe or fittings.

V. Hot Tap : The Contractor shall provide means and methods of performing hot tap connections as required by the contract documents.

3.9 CHEMICAL PIPING

A. All chemical piping shall be installed so that lines are readily accessible for cleaning.

B. At all exposed changes in direction in chemical piping, tees shall be provided with extra threaded openings plugged to facilitate cleaning.

1. Thread tape or thread sealer shall be applied to the threads of all plugs to facilitate ease of removal.

C. Drip shields shall be installed beneath all elevated chemical piping in areas subject to pedestrian traffic to contain and transport leakage to an approved disposal area.

3.10 PIPE JOINTS

A. Pipe joints shall be provided as specified or as indicated on the contract drawings.

B. Threaded Joints:

1. Pipe threads shall conform to ANSI B2.1, NPT, and shall be full and cleanly cut.

2. Not more than three threads at each pipe connection shall remain exposed after installation.

3. Ends of pipe shall be reamed after threading and before assembly to remove all burrs.

4. Threaded joints in plastic piping shall be made up with Teflon thread tape applied to all male threads.

5. Threaded joints in stainless steel piping shall be made up with Teflon thread sealer and Teflon thread tape applied to all male threads.

6. Thread tape and joint compound or sealers are not to be used in threaded joints which are to be seal welded.

C. Compression Joints:

1. Ends of tubing shall be square cut and all burrs removed.

2. The tubing end shall be fully inserted into the compression fitting and the nut shall be tightened not less than 1-1/4 turns, and not more than 1-1/2 turns past finger-tight, or as recommended by the fitting manufacturer, to produce a leak-tight, torque free connection.

D. Flared Joints:

1. The ends of annealed copper tubing shall be cut square and all burrs removed prior to flaring.

2. Ends shall be uniformly flared without scratches or grooves.

3. Fittings shall be tightened as required to produce a leak-tight joint.

E. Solder and Brazed Joints:

1. Where solder fittings are specified in lines smaller than 2", joints may be soldered or brazed, at the option of the CONTRACTOR.

2. Joints in 2" and larger copper tubing shall be brazed.

3. Joints in copper refrigerant piping shall be brazed.

   a. Solder will not be accepted.

4. Surfaces to be joined shall be thoroughly cleaned with flint paper and coated with a thin film of flux.

5. At each joint, tubing shall enter to the full length of the fitting socket.

6. Care should be taken to avoid overheating the metal or flux.

7. While the joint is still hot, all excess filler metal and flux shall be removed with a rag or a brush.

F. Solvent Welded Joints:

1. All joint preparation, cutting, and jointing operations shall comply with the pipe manufacturer's recommendations and ASTM D2855.

2. Pipe ends shall be beveled or chamfered to the dimensions recommended by the pipe manufacturer.

3. Newly assembled joints shall be suitably blocked or restrained to prevent movement during the set time recommended by the manufacturer.

4. Pressure testing of solvent welded piping systems shall not be performed until the applicable curing time, set forth in Table X2.1 of ASTM D2855, has elapsed.

G. Flanged Joints:

1. Flange bolts shall be tightened sufficiently to slightly compress the gasket and effect a seal, but not so tight as to fracture or distort the flange.

2. A plain washer shall be installed under the head and nut of bolts connecting plastic pipe flanges.

3. Anti-seize thread lubricant shall be applied to the threaded portion of all stainless steel bolts during assembly.

4. Connecting flanges shall have similar facings (i.e., flat or raised face).

H. Welded Joints:

1. Welding shall conform to these specifications and recommendations contained in the "Code for Pressure Piping".

I. Rubber Gasketed Joints:

1. Clamps for hubless cast iron soil pipe shall be installed in accordance with the manufacturer's recommendations.

J. Grooved Couplings:

1. Grooves cut in steel pipe shall conform to flexible grooving dimensions as set forth in AWWA C606.

3.11 ALIGNMENT

A. All piping shall be installed to lines, grades, and elevations indicated on the contract drawings.

B. All deviations from the line, grade, or elevation as indicated on the contract drawings shall be approved in writing by the ENGINEER.

C. The CONTRACTOR is responsible for coordinating all other work to insure that piping is installed as indicated on the contract drawings.

D. Piping intended to be straight shall be straight. Deflections from a straight line or grade shall be approved in writing by the ENGINEER and shall be accomplished by the use of approved fittings.

E. For buried piping, all pipe subgrades shall be determined and checked by survey.

F. If laser equipment is used for piping installation, periodic elevation measurements shall be made with survey equipment to verify the accuracy of grade or elevation. If such measurements indicate thermal deflection of the laser due to differences between ground or atmospheric temperature and the air temperature within the pipe, steps shall be taken to prevent further thermal deflections.

3.12 PIPE INSULATION

A. All domestic hot water piping, cold water piping, and roof drain/overflow lines which pass through spaces above finished ceilings, or are suspended over equipment, electrical panels, or cabinets shall be insulated.

B. Piping shall be tested and shall be approved by the INSPECTOR prior to insulation installation.

C. All end joints of insulation shall be tightly butted.

D. All seams and joints shall be held by manufacturer's standard adhesive.

E. Jacket laps shall be neatly pasted in place.

F. All joints shall be pointed with insulating cement.

G. Fittings, flanges, and valves shall be insulated with approved molded insulation or insulating cement of the same thickness as the pipe insulation.

H. Hangers shall permit insulation to pass through and suitable saddles shall be provided to prevent the weight of the piping from being supported by the insulation.

3.13 PROTECTIVE COATING

A. All stainless steel, copper, and black steel pipe in buried locations shall have exterior surfaces protected in accordance with Section 09800 - Protection Coating.

3.14 COATING INSPECTION

A. All shop-applied coatings on pipe or fittings shall be inspected for holidays and other defects after receipt of the pipe or fittings on the job site, and again after installation if it is determined by the INSPECTOR that the coating may have been damaged.

1. Inspection shall be made using an electrical holiday detector.

2. The detector used, and inspection procedures, shall be in conformance with the requirements of Section 4.4 of AWWA C209.

B. All field-applied tape wrap on pipe, pipe joints, fittings and valves shall be inspected for holidays and other defects following completion of wrapping and again following installation if it is determined by the INSPECTOR that the wrapping may have been damaged.

C. Inspection of all field-applied wrapping shall be conducted by the City of Los Angeles Bureau of Standards.

D. Holidays and other defects detected during inspection shall be repaired in accordance with the recommendations of the coating or tape wrap manufacturer, as applicable.

1. At the discretion of the INSPECTOR, major areas of defects in pipe coatings may result in rejection of the pipe and its immediate removal from the job-site.

2. At the discretion of the INSPECTOR, major areas of defects in pipe coatings may be repaired on site by a qualified representative of the manufacturer or supplier.

3.15 BURIED PIPE

A. All stainless steel, copper, and black steel pipe in buried locations shall have exterior surfaces protected with a shop-applied plastic coating.

B. All galvanized piping in buried locations shall be wrapped with an approved pipe wrap, or be coated with an approved coal tar coating.

C. Buried pipe shall be protected from lateral displacement by use of the specified pipe embedment and/or encasement.

D. Under no circumstance shall pipe be laid in water.

E. All pipes will be laid on native material unless otherwise specified or indicated on the contract drawings.

F. All pipe subgrade shall be compacted to a relative density of 95%, unless otherwise indicated on the contract drawings.

G. All subgrade shall have compaction tests taken and be approved by the INSPECTOR prior to pipe installation.

H. When pipe laying is interrupted, or stopped at the end of the work shift, the open ends of pipe shall be sealed with a watertight plug, or other means acceptable to the INSPECTOR, to prevent water from entering the pipe.

I. Plastic pipe shall be "snaked" in the trench, and shall be kept shaded and shall be covered with backfill immediately following testing.

J. No piping will be encased or backfilled prior to testing and without approval of the INSPECTOR.

3.16 CONCRETE ENCASEMENT

A. All fresh water and potable water piping shall be encased in blue concrete, per the encasement detail in the contract drawings.

B. All other pipe encasement shall be installed where indicated on the contract drawings, per the encasement detail in the contract drawings.

C. Concrete and reinforcement for encasement shall be as specified in the cast-in-place concrete section of these specifications.

D. All pipe to be encased shall be suitably supported and blocked in proper position to allow for complete encasement.

E. All pipes to be encased shall be anchored to prevent floating.

F. All piping to be encased shall be tested as specified and the INSPECTOR shall approve the installation prior to encasement.

3.17 TESTING

A. Testing of all pipe installations shall be done in conformance with Section 15620 -Pipe Systems Testing of the specifications.

3.18 DISINFECTION

A. Disinfection of miscellaneous piping, as applicable, shall be in conformance with the specifications.

1. Disinfecting Solution: Water solution containing chlorine at the minimum concentration of 50 parts per million.

2. Fill entire system with disinfecting solution.

3. Allow to stand 6 hours minimum.

4. Flush system until chlorine content is at or below content of local water supply.

3.19 AS-BUILT DRAWINGS

A. The CONTRACTOR shall provide surveyed "as-built" drawings for all piping installed.

B. "As-built" drawings shall be provided for buried pipe installations as well as pipe installed in tunnels, galleries, inside buildings, and above-ground outside.

C. For buried pipe installations, surveyed "as-builts" shall include the elevation and location of pipe, valves, and all other pertinent information of the installation, as well as all existing piping or structures in the immediate area.

D. For buried installations, survey shall be taken of location and elevations of all piping installed prior to any encasement or backfill.

E. For buried, encased piping, survey shall be taken both prior to encasement and after the encasement is in place.

F. Drawings shall be forwarded to the ENGINEER for review and approval within five days after the installation is completed.

G. Progress payment will be withheld for all pipe installations for which "as-built" drawings are not received as specified.

END OF SECTION

SECTION 15615
VALVES, GENERAL

PART 1 - GENERAL

1.1 THE REQUIREMENT

A. The CONTRACTOR shall provide all tools, supplies, materials, equipment, and labor necessary for furnishing, epoxy coating, installing, adjusting, and testing of all valves and appurtenant work, complete and operable, in accordance with the requirements of the Contract Documents. Where buried valves are shown, the CONTRACTOR shall furnish and install valve boxes to grade, with covers, extensions, and position indicators.

B. The provisions of this Section shall apply to all valves and valve operators specified in the various Sections of Divisions 15 and 17 of these Specifications except where otherwise specified in the Contract Documents. Valves and operators in particular locations may require a combination of units, sensors, limit switches, and controls specified in other sections of these Specifications.

1.2 RELATED WORK SPECIFIED ELSEWHERE

A. Division 2 and 15, applicable sections, Pipe, Fittings, and Valves.

B. Section 09800 - Protective Coating.

C. Section 11000 - Equipment General Provisions.

D. Section 16490 - Electric Motors.

E. Division 17 Instrumentation and Controls, applicable sections, Electric, Hydraulic, and Pneumatic Valves and Operators.

F. Section 15780 - Piping Identification Systems.

G. Division 16 Electrical, applicable sections.

1.3 REFERENCE SPECIFICATIONS, CODES AND STANDARDS

A. Comply with the reference specifications of the GENERAL REQUIREMENTS.

B. Comply with the current provisions of the following Codes and Standards.

ANSI B16.1	Cast Iron Pipe Flanges and Flanged Fittings, Class 25, 125, 250, and 800.
ANSI B16.5	Pipe Flanges and Flanged Fittings, Steel Nickel Alloy and Other Special Alloys.
ANSI/ASME B1.20.1	General Purpose Pipe Threads (inch).
ANSI/ASME B31.1	Power Piping.
ANSI/ASME B31.3	Process Piping.
ANSI/ASME B31.9	Building Services Piping.

ASTM A 36	Specification for Structural Steel.
ASTM A 48	Specification for Gray Iron Castings.
ASTM A 126	Specification for Gray Iron Castings for Valves, Flanges, and Pipe Fittings.
ASTM A 536	Specification for Ductile Iron Castings.
ASTM B 61	Specification for Steam or Valve Bronze Castings.
ASTM B 62	Specification for Composition Bronze or Ounce Metal Castings.
ASTM B 148	Specification for Aluminum-Bronze Castings.
ASTM B 584	Specification for Copper Alloy Sand Castings or General Applications.
ANSI/AWWA C207	Steel Pipe Flanges for Water Works Service, Sizes 4 in. through 144 in.
ANSI/AWWA C500	Gate Valves for Water and Sewerage Systems.
ANSI/AWWA C502	Dry-Barrel Fire Hydrants.
ANSI/AWWA C503	Wet-Barrel Fire Hydrants.
ANSI/AWWA C504	Rubber-Seated Butterfly Valves.
ANSI/AWWA C506	Backflow Prevention Devices - Reduced Pressure Principle and Double Check Valves Types.
ANSI/AWWA C507	Ball Valves 6 inches through 48 inches.
ANSI/AWWA C508	Swing-Check Valves for Waterworks Service, 2 inches Through 24 inches NPS.
ANSI/AWWA C509	Resilient-Seated Gate Valves for Water and Sewage Systems.
ANSI/AWWA C516	Large Diameter Rubber-Seated Butterfly Valves.
ANSI/AWWA C550	Protective Interior Coatings for Valves and Hydrants.
SSPC-SP-5	White Metal Blast Cleaning.
MSS-SP-70	Manufacturers Standardization Society of the Valve and Fitting Industry; Cast Iron Gate Valves. Flanged and Threaded Ends.

1.4 CONTRACTOR SUBMITTALS

A. Submittals shall be made in accordance with GENERAL REQUIREMENTS. In addition to product information, the CONTRACTOR shall submit for approval lay-out drawings showing valve locations within the piping system, supports, and identification numbers.

B. The following submittals and specific information shall be provided.

1. Shop Drawings: Shop drawings of all valves and operators including associated wiring diagrams and electrical data, shall be furnished as specified in General Requirements. Submit for approval the following:

   a. Manufacturer's literature, illustrations, paint certifications, specifications, detailed drawings, data and descriptive literature on all valves and appurtenances.
   b. Deviations from Contract Documents.
   c. Engineering data including dimensions, materials, size and weight.
   d. Fabrication, assembly and installation drawings.
   e. CV values, head loss curves, and as required, calculations.
   f. Special tools list.

2. Valve Labeling: The CONTRACTOR shall submit a schedule of valves to be labeled indicating in each case the valve location and the proposed wording for the label. Complete nameplate data of valves and actuators is required.

3. Operation and Maintenance Manuals:

   a. Submit complete installation, operation and maintenance manuals including test reports, maintenance data and schedules, description of operation, and spare parts information.
   b. Furnish Operation and Maintenance Manuals in conformance with the requirements of the General Requirements.

4. Shop Tests: Hydrostatic tests shall be performed, when required by the valve specifications included herein.

5. Certificates: Where specified or otherwise required by ENGINEER, submit Test Certificates and Certificates of Compliance with AWWA standards and other specifications, especially where it concerns the suitability of the materials of construction for the particular application.

1.5 QUALITY ASSURANCE

A. Valve Testing: Valves shall be shop tested per manufacturer's recommendations and applicable AWWA/ANSI specifications prior to shipment. Manufacturer's certification that valves have been shop tested shall be submitted for approval 30 days prior to scheduled shipment.

B. Bronze Parts: Where specified, all interior bronze parts of valves shall conform to the requirements of ASTM B 62, or, where not subject to dezincification, to ASTM B 584.

C. Shop Inspection: Shop inspection of valve construction, testing and coating shall be witnessed and approved by the INSPECTOR. All valves will be shop inspected unless otherwise waived in writing by the INSPECTOR.

D. The CONTRACTOR shall demonstrate that each valve installed as a part of a piping system will operate under field conditions in a manner consistent with the design of the system. All testing of valves shall be witnessed and approved by the INSPECTOR.

E. For all pneumatic, hydraulic, and electric motor operators and controls, it shall be the responsibility of the CONTRACTOR to provide a qualified representative of the valve manufacturer to perform all field adjustments to set operator limit switches for the required

functions. The cost of providing a qualified representative of the valve manufacturer for field adjustments shall be included in the CONTRACTOR'S bid. All wiring of motor operators shall be identified with a unique number unlike any other wiring identification. It is the responsibility of the CONTRACTOR to coordinate the requirements of this section with those involving both specifications of Division 16, "Electrical" and Division 17, "Instrumentation and Control."

F. All adjustments, calibration, and/or testing shall be done in the presence of the INSPECTOR.

1.6 PRODUCT DELIVERY, STORAGE, AND HANDLING

A. Deliver materials to the site to ensure uninterrupted progress of the Work. Deliver anchorage devices, which are to be embedded in cast-in-place concrete, in ample time to not delay the Work.

B. All boxes, crates and packages shall be inspected by CONTRACTOR upon delivery to the site. CONTRACTOR shall notify ENGINEER if any loss or damage exists to equipment or components. Replace loss and repair damage to new condition, in accordance with manufacturer's instructions.

C. Store materials to permit easy access for inspection and identification. Keep all material off the ground, using pallets, platforms or other supports. Protect steel members and packaged materials from corrosion and deterioration.

D. Provide full-face protectors of waterproof material fastened to each side of the valve body to protect joints and the valve interior.

PART 2 - PRODUCTS

2.1 VALVES

A. General: The CONTRACTOR shall furnish all valves, operators, actuators, valve-operating units, stem extensions, and other accessories as shown or specified. All valves shall have the name of the manufacturer and the site of the valve cast on the body or bonnet or shown on a permanently attached plate in raised letters. All valves shall be new and of current manufacture. All valves, 6-inch and larger, shall have operators with position indicators. Where buried, these valves shall be provided with valve boxes and covers containing position indicators, and valve extensions. Shut-off valves mounted higher than 5 feet 6 inches above working level shall be provided with chain operators.

B. Valve Flanges: The flanges of valves shall be in accordance with Section 15610 - Piping, General and other Sections of Division 15, "Mechanical."

C. Valve Stems: Except where otherwise specified, valves with motorized operators shall have stems conforming to ASTM A276 Type 316 stainless steel with minimum tensile strength of 95,000 psi, and a minimum yield point of 75,000 psi, and elongation of 25% in 2 inches. Manually operated valves shall have silicon-bronze stems conforming to ASTM B 584-875, having minimum tensile strength of 60,000 psi, a minimum yield point of 24,000 psi, and elongation of 16% in 2 inches. Where subject to dezincification, manually operated valve stems shall be of bronze conforming to ASTM B62, containing no more than 5% zinc, nor more than 2% aluminum.

D. Protective Coating: Except where otherwise specified, ferrous surfaces, exclusive of stainless steel surfaces, in the water passages of all valves 4-inch and larger, as well as the exterior surfaces of all submerged, buried or aboveground valves and operators, shall be coated as

specified in Section 09800 - Protective Coating. Flange faces of valves shall not be coated. The valve manufacturer shall certify in writing that such coating has been applied and tested in the manufacturing plant prior to shipment, in accordance with these Specifications.

E. Valve Operators:

1. Where shown, certain valves shall be furnished with electric operators, provided by the valve manufacturer. All operators of a given type shall be furnished by the same manufacturer. Where these operators are supplied by different manufacturers, the CONTRACTOR shall coordinate their selection to provide uniformity of each type of electric operator. All valve operators, regardless of type, shall be installed, adjusted, and tested by the valve manufacturer at the manufacturing plant. Unless otherwise specified, all electric, pneumatic, and hydraulic valve operators shall be in accordance with Sections of Division 17, "Instrumentation and Controls."

2. All manual operators shall have levers or handwheels, unless otherwise shown. Where buried, the valves shall have extensions with square nuts or floor stands. Valves mounted higher than 5 feet-6 inches above floor or operating level shall have chain operators. Unless otherwise shown or specified, valves of sizes 4-inch and larger shall have gear-assisted operators.

3. Chainwheel operators shall include chainwheel and chain guide for valve handwheels. Chainwheel shall be made of ductile iron. Rim shall contain as an integral part of the casting a groove into which the chain guide attaches. Chain guide shall be made of malleable iron. Chainwheels shall be adjustable and detachable, furnished complete with Type 310 stainless steel attachment sets for attachment of chainwheel to valve handwheels. Chainwheel operators shall be "Hammer-blow" with safety wheel configuration. Chainwheel safety cables, clips and fasteners shall be Type 316 stainless steel. Ferrous surfaces, exclusive of stainless steel surfaces, shall be coated as specified in Section 09800 - Protective Coating. Chainwheel operators shall also be furnished with Type 316 stainless steel lock-link chains. The chain shall be of sufficient length at approximately 3 feet above the floor or operating level.

F. Valve Labeling: Except when such requirement is waived by the ENGINEER in writing, a label shall be provided on all valves exclusive of hose bibs. The label shall be of 1/16-inch plastic or stainless steel, minimum 2 inches by 4 inches in size and shall be permanently attached to the valve or on the wall adjacent to the valve as directed by the ENGINEER.

G. Nuts and Bolts: All nuts and bolts on valve flanges and supports shall be Type 316 stainless steel.

H. Lubricating Gun: The CONTRACTOR shall supply a manual lubricating gun for lubricated plug valves in sizes up to 6-inch, inclusive. For larger valves the CONTRACTOR shall furnish a pneumatically operated lubricating gun. The guns shall be of the same manufacturer as the valves. They shall be equipped with flexible connector, pressure gage, and safety valve, with operating instructions and shipped in a labeled tool box.

PART 3 - EXECUTION

3.1 VALVE INSTALLATION

A. General: All valves, operating units, controls, stem extensions, valve boxes, and accessories shall be installed in accordance with the manufacturer's written instructions and as shown and

specified. All valves shall be adequately braced to prevent warpage and bending under the intended use. Valves shall be firmly supported to avoid undue stresses on the pipe.

B. Access: All valves shall be installed to provide easy access for operation, removal, and maintenance and to avoid conflicts between valve operators and structural members or handrails.

C. Valve Accessories:

1. Where combinations of valves, sensors, switches, and controls are specified, it shall be the responsibility of the CONTRACTOR to properly assemble and install these various items so that all systems are compatible and operating properly. The relationship between interrelated items shall be clearly noted on Shop drawing submittals.

2. Valve operators and controls are to be installed where specified and designated on the Contract drawings. The CONTRACTOR is responsible for installation of the correct valve operator and control as specified to provide a complete piping system as specified.

D. All valves shall be field tested following installation to demonstrate that the valve operates under field conditions in a manner consistent with the design of the system.

E. All testing of valves shall be witnessed and approved by the INSPECTOR.

F. The CONTRACTOR shall demonstrate that each valve operator and control installed as a part of a piping system will operate under field conditions as designed and in the manner for which the operator was specified. All testing will be witnessed and approved by the INSPECTOR.

END OF SECTION

SECTION 15620
PIPE SYSTEM TESTING

PART 1 - GENERAL

1.1 THE REQUIREMENT

A. The CONTRACTOR shall provide all tools, supplies, materials, equipment, and all labor necessary for the testing of piping, all in accordance with the requirements of the Contract Documents.

B. The provisions of this Section shall apply to the testing of mechanical piping specified in Division 15 and piping related to equipment specifications in Divisions 11 and 13.

C. The CONTRACTOR shall obtain all necessary permits through regulatory agencies including, but not necessarily limited to, South Coast Air Quality Management District, State of California, and the City of Los Angeles for the use, venting, and disposal of test media employed. Unless otherwise specified, testing of piping systems shall be completed prior to final cleaning and disinfection.

1.2 RELATED WORK SPECIFIED ELSEWHERE

A. The WORK of the following Sections and Divisions applies to the WORK of this Section. Other Sections of the Specifications, not referenced below, shall also apply to the extent required for proper performance of this WORK.

1. Section 15610 - Piping, General.

2. Division 15, Mechanical as applicable.

3. Section 02515 - Water Pipeline Testing and Disinfection.

1.3 CONTRACTOR SUBMITTALS

A. Submittals shall be made in accordance with Section 15610 - Piping General and the GENERAL REQUIREMENTS.

B. The CONTRACTOR shall submit test procedures for all piping to the ENGINEER for approval prior to the start of testing.

C. A testing flow diagram indicating all lines to be field tested shall be prepared by the CONTRACTOR to facilitate the grouping of lines and connected equipment for a systems test. This testing flow diagram shall be submitted to the ENGINEER for review prior to the start of testing.

D. The testing flow diagrams shall contain the following information:

1. Individual Lines:

a. Line Identification.
b. Maximum Test Pressure.
c. Test Medium Used.

2. System Testing:

    a. Identification of lines in each group.
    b. Identification of connected equipment in each group.
    c. Test medium to be used in each group.
    d. Test pressure to be used in each group and point of application.
    e. Location of test blinds in each group.

E. Upon satisfactory completion of each field test, a record containing the following information shall be made and submitted to the ENGINEER.

    a. Date of test.
    b. Identification of item(s) tested.
    c. Test medium.
    d. Test pressure and duration.
    e. Test log, including procedure, leaks discovered, and corrective actions taken.
    f. Approval signature by INSPECTOR.

F. Inspection: All testing of piping shall be conducted in the presence of the Inspector. Upon completion of testing, the CONTRACTOR shall complete and present for the Inspector's signature on Pipeline Test Report which indicates the piping tested, the test medium, the test duration, the pressure the piping was tested under and is signed by the CONTRACTOR'S authorized representative.

1.4 QUALITY ASSURANCE

A. Shall be in accordance with Section 15610 - Piping General, and the GENERAL REQUIREMENTS.

PART 2 - PRODUCTS (NOT USED)

PART 3 - EXECUTION

3.1 SHOP TESTING OF PIPING

A. Unless otherwise specified, hydrostatic testing of shop fabricated pipe spools is not required. Fabricated spools shall be field tested after erection.

B. For jacketed piping, the internal line only shall be shop tested on the basis of the internal or external pressure whichever is critical. The jacket shall be field tested.

3.2 FIELD TESTING OF PIPING

A. General:

1. Fresh water piping shall be tested in accordance with Section 02515 - Water Piping Testing and Disinfection. Gravity sewer and gravity drain lines shall be tested in accordance with Section 02525 - Sanitary Sewer System Testing. All liquid carrying lines shall be hydrostatic tested and all air/odor control lines shall be pneumatically tested. These results shall be reported to the ENGINEER using the attached form "PIPELINE TEST REPORT".

2. All piping shall be pressure tested per the applicable piping code, unless otherwise specified herein.

3. Tests shall be applied after erection and before equipment is initially placed in service.

4. Tests shall be performed with all welded, threaded or flanged joints exposed, and before backfilling, insulating, or covering the joints of coated and wrapped buried lines.

5. The field test pressure shall not be applied until equipment and its contents reach approximately the same temperature.

6. The minimum test temperature is 50° F. When testing through vessels, the metal temperature shall not be less than 60° F. Deviation from this requires the ENGINEER's approval.

7. Pressure tests for vents, drains, relief valve discharge stacks, and lines open to atmosphere shall not be required.

8. In jacketed line, the jacket, complete with jumpovers, shall be field tested on the basis of jacket pressure.

9. The internal line of jacketed lines shall be retested in the field for flanged joint integrity.

10. In assembled equipment, it will be permissible to test piping in groups or systems only if the maximum test pressure rating of included equipment is equal to or more than 1-1/2 times the cold design service pressure.

11. Block valves at the process connections shall be tightly closed during pressure tests of the main process piping systems.

12. Instrument process piping beyond the first block valve shall not be tested prior to plant startup, except for careful inspection.

13. During the pressure test of the main process piping and/or equipment, the instrument process piping shall be vented to ensure that the instrument is not subjected to the test pressure due to a leaking process block valve.

14. The maximum test pressure applied to special piping components, such as displacement meters, expansion joints, strainers, etc., shall be the manufacturer's maximum allowable test pressure.

15. The ENGINEER shall be given five calendar days advance notice by the CONTRACTOR of any field testing to be performed.

16. Where codes require witnessing of field testing, the CONTRACTOR shall arrange for the presence of a properly authorized INSPECTOR.

17. The effect of hydrostatic head shall be considered when determining correct test gage reading and safe and/or effective test pressure of any element within a test system.

18. All orifice plates which interfere with filling, venting and draining shall be removed for testing.

19. Before pressure testing, all lines and/or systems shall be inspected to ensure that all connected parts not to be included in the test are isolated.

20. Operational blinds may be used for field testing. Any other test blinds or blanks required for field testing during initial construction shall be furnished by the CONTRACTOR.

21. The correction of any shop fabricated defects revealed by the field testing procedure shall be repaired at the CONTRACTOR's expense.

22. Piping not pressure tested shall be checked for leaks after it is placed in service.

B. Hydrostatic Testing of Piping:

1. All piping to be hydrostatically tested per the applicable code to at least 1-1/2 times the design pressure but not less than 50 psig, except piping excluded herein. All piping design pressures are specified in the Line Summary (drawings MG601) included in the Contract Drawings.

2. Hydrostatic testing shall be done with clean water or water-glycol solution.

3. Testing of austenitic stainless steel shall be done using fresh potable water which shall be completely drained from the system following the test. The system shall be blown out with clean, dry air or nitrogen.

4. All water, steam and condensate systems shall be given full hydrostatic tests unless otherwise noted.

5. Liquid lines open to atmosphere shall be filled with water and tested to the maximum operating static head pressure.

6. Where any equipment is not designed for full hydrostatic test, or where the presence of water is not permitted in the equipment, such equipment shall be isolated from the test by blinds or valves or by disconnection.

7. Caution shall be exercised in hydrostatic system testing to assure that the simultaneous testing of large sized adjacent equipment and piping shall not overload supporting structures and foundations.

8. Any system under hydrostatic test shall be carefully observed, proper precautions shall be taken, and procedures established to prevent over pressuring of lines and any connected equipment.

9. 3/4-inch valve vents shall be installed at high points of the system. All vents and other connections which can serve as vents shall be open during filling so that all air is vented prior to applying test pressure to the system.

10. 3/4 inch valve drains shall be installed at low points to ensure complete filling of the piping and elimination of all air pockets.

11. During pressurization of the piping system, caution shall be exercised to ensure that the designated test pressure is not exceeded.

12. Test pressure shall be increased slowly in predetermined increments. Visual checks for leaks or damage shall be made at each increment. If any such leaks or damage are observed, the test shall be terminated, and suitable repairs made by the CONTRACTOR before retesting the system.

13. Tests shall be held at the final test pressure for a minimum of one hour or long enough to permit inspection of all joints and welds for leaks by means of soap and water solution, or other means approved by the ENGINEER.

14. Final approval of hydrostatic testing shall be made by the ENGINEER after completion of all testing and receipt of all test reports.

15. After satisfactory completion of hydrostatic testing, the piping system shall be restored to its normal operating configuration:

    a. All temporary blinds shall be removed, and all lines and equipment shall be completely drained of the test fluid. The system shall be vented while draining to avoid a vacuum.
    b. All valves, orifice plates, expansion joints, short pieces of piping, and other equipment excluded from hydrostatic testing shall be installed.
    c. Valves closed solely for hydrostatic testing shall be opened.
    d. After system has been drained, temporary pipe supports shall be removed.
    e. Plant air, instrument air, nitrogen, hydraulic oil, and lube oil piping systems shall be blown dry with clean, dry air or nitrogen.
    f. Soap or other test solution residue shall be washed with potable water from the exterior of the piping system.

C. Pneumatic Testing of Piping:

1. When water would be harmful or when specified on the Contract Documents, a pneumatic test using clean, dry air or nitrogen shall be substituted for the required purge and hydrostatic test of piping.

2. A preliminary check test for leaks shall be performed at not more than 20" WC at which time all welds and connections shall be inspected for leaks by a soap and water solution test.

3. All piping to be pneumatically tested to at least 1.25 times the design pressure or per the applicable piping code. All piping design pressures are specified in the Line Summary (drawing MG601) included in the Contract Drawings.

4. Tests shall be held at final test pressure with no pressure loss for a minimum of one hour or long enough to permit inspection of all joints and welds by means of soap and water solution, or other means approved by the ENGINEER.

5. Final approval of pneumatic testing shall be made by the ENGINEER after completion of all testing and receipt of all test reports.

6. After satisfactory completion of pneumatic testing, the piping system shall be restored to its normal operating configuration:

    a. All temporary blinds shall be removed.
    b. All valves, orifice plates, expansion joints, short pieces of piping, and other equipment excluded from hydrostatic testing shall be installed.
    c. Valves closed solely for pneumatic testing shall be opened.
    d. All piping disconnected for the purposes of pneumatic testing shall be reconnected.

3.3 CLEANUP

A. Upon completion of the piping test, all debris and surplus materials from the work shall be removed from the site.

END OF SECTION

(SEE ATTACHMENT)

ATTACHMENTS TO SECTION 15620

Attachments to Technical Specifications Section 15620 consists of one (1) document, as follows:

ATTACHMENT NUMBER	TITLE OF ATTACHMENT	NUMBER OF PAGES IN THIS ATTACHMENT
15620-A1	Pipeline Test Report	1

PIPELINE TEST REPORT

DATE: _____

JOB NUMBER: _____ **ELEMENT:** _____

INITIAL TEST: _____ **RETEST:** _____

SYSTEM TESTED: _____

SECTION TESTED: _____

PLAN PAGE #: _____

PIPE MATERIAL: _____

TYPE OF TEST: _____

TEST MEDIUM: _____

TEST PRESSURE: _____

TEST DURATION: _____

TEST START TIME: _____ **FINISH:** _____

PRESSURE LOSS/GAIN: _____

REASON FOR LOSS/GAIN: _____

_____

ACTION TAKEN: _____

_____

TEST PERFORMED BY: _____
Print Name

_____
DATE **NAME OF CONTRACTOR**

TEST WITNESSED AND ACCEPTED BY: _____
Print Name

_____
DATE **BUREAU OF CONTRACT ADMINISTRATION**

SECTION 15640
POLYVINYL CHLORIDE (PVC) PIPE, FITTINGS, AND VALVES

PART 1 - GENERAL

1.1 THE REQUIREMENT

A. The CONTRACTOR shall furnish all tools, equipment, materials, and supplies and shall perform all labor required to complete the work as indicated on the Drawings and specified herein.

B. This Section covers furnishing and installing polyvinyl chloride (PVC) pipeline, fittings, flanges, and valves, complete, in place, in accordance with the requirements of the Contract Documents.

1.2 RELATED WORK SPECIFIED ELSEWHERE

A. Section 15610 - Piping, General.

B. Section 09800 - Protective Coating.

C. Section 02310 - Earthwork.

1.3 REFERENCE SPECIFICATIONS, CODES, AND STANDARDS

A. Comply with the reference specifications of the GENERAL REQUIREMENTS.

B. Comply with the current provisions of the following Codes and Standards.

1. Commercial Standards:

ANSI/AWWA C900	Polyvinyl Chloride (PVC) Pressure Pipe 4-in Through 12-in for Water.
ANSI/AWWA C905	Polyvinyl Chloride (PVC) Pressure Pipe 14-in Through 36-in for Water.
ASTM D1784	Specification for Rigid Polyvinyl Chloride (PVC) Compounds and Chlorinated Polyvinyl Chloride (CPVC)
ASTM D1785	Specification for Polyvinyl Chloride (PVC) Plastic Pipe, Schedules 40, 80, and 120.
ASTM D2584	Test Method for Ignition Loss of Cured Reinforced Resins.
ASTM D4101	Specification for Polypropylene Injection and Extrusion Materials.
PPI Technical Report TR 3/4	Policies and Procedures for Developing Recommended Hydrostatic Design Stresses for Thermoplastic Pipe Materials.
AWWA Manual M23	PVC Pipe - Design and Installation.

1.4 CONTRACTOR SUBMITTALS

A. Submittals shall be made in accordance with the GENERAL REQUIREMENTS.

B. Shop Drawings: The CONTRACTOR shall submit shop drawings of pipe, fittings, flanges, valves, and appurtenances.

C. Certifications: The CONTRACTOR shall furnish a certified affidavit of compliance for all pipe and other products or materials furnished under this Section of the Specifications, as specified in the referenced standards and the following supplemental requirements:

1. Hydrostatic proof test reports.

2. Sustained pressure test reports.

3. Burst strength test reports.

D. All expenses incurred in making samples for certification of tests shall be borne by the CONTRACTOR.

1.5 QUALITY ASSURANCE

A. Inspection: All pipes shall be subject to inspection at the place of manufacture in accordance with the provisions of the referenced standards as supplemented by the requirements herein. The CONTRACTOR shall notify the INSPECTOR in writing of the manufacturing starting date not less than 14 calendar days prior to the start of any phase of the pipe manufacture.

B. During the manufacture of the pipe, the INSPECTOR shall be given access to all areas where manufacturing is in process and shall be permitted to make all inspections necessary to confirm compliance with the Specifications.

C. Tests: Except as modified herein, all materials used in the manufacture of the pipe shall be tested in accordance with the requirements of this Section of the Specifications, as specified in the referenced standards, as applicable.

D. The CONTRACTOR shall perform said material tests in accordance with the requirements of the Contract Documents. The INSPECTOR shall have the right to witness all testing conducted by the CONTRACTOR provided that the CONTRACTOR's schedule is not delayed for the convenience of the INSPECTOR.

E. In addition to those tests specifically required, the INSPECTOR may request additional samples of any material for testing by the ENGINEER. The additional samples shall be furnished at no additional cost to the CITY.

PART 2 - PRODUCTS

2.1 GENERAL

A. PVC piping systems shall have design pressure limit of 100 psig and temperature limit of 110-degree F, unless otherwise noted.

2.2 PIPE DESIGN CRITERIA

A. General: PVC pressure pipe shall be designed in accordance with the requirements of Appendix A of ANSI/AWWA C900 and of AWWA C905, as applicable, and the supplemental requirements specified in this Section.

B. Pipe Wall Thickness for Internal Pressure: The pipe shall be designed with a minimum thickness (t) or dimension ratio (DR) in accordance with Section A.3 of the applicable above referenced Appendix A.

C. Determination of External Loads: In lieu of the equations specified in Section A.4 of the above referenced Appendix A, the dead (earth) loads shall be computed using the following 2 equations for trench or embankment conditions as applicable:

1. Trench Condition:

$$W_d = C_d w B_d^2$$

Where:	W_d	=	Earth load in pounds per linear foot
	C_d	=	Calculation coefficient
	Ku'	=	0.13
	w	=	120 l b/ft^3
	B_d	=	Trench width at top of pipe, feet

2. Positive Projecting Embankment Condition:

$$W_c = C_c w B_c^2$$

Where:	W_c	=	Earth load in pounds per linear foot
	C_c	=	Calculation coefficient (based on r_{sd}P of 0.75)
	Ku	=	0.19
	w	=	120 lb/ft^3
	B_c	=	Outside diameter of pipe, feet

D. Similarly, in lieu of the method specified in Section A.4 of the above referenced Appendix A, the truck live loads shall be determined using the method recommended by AASHTO in "Standard Specifications for Highway Bridges". For depths of cover less than 10 feet HS-20 live loads shall be added to the earth loads to determine the total load. For depths of cover 3 feet or less, HS-20 live load plus impact shall be included.

E. Deflection Control: With reference to Section A.5 of the above referenced Appendix A, the deflection of the pipe after installation shall not exceed 0.03 times the outside diameter. If the calculated deflection exceeds 0.03 times the outside diameter the pipe class shall be increased or the quality of the pipe zone backfill shall be improved to achieve a higher modules of soil reaction, E'. For purposes of calculation, values of E' shall be 1100 psi at 90 percent Standard Proctor; 1500 psi at 95 percent Standard Proctor; and 2500 psi at 100 percent Standard Proctor. Similarly, the deflection lag factor shall be 1.5.

2.3 PIPE

A. The pipe shall be of the diameter and pressure class specified or shown, shall be furnished complete with elastomeric gaskets, and all specials and fittings shall be provided as required in the Contract Documents. The dimensions and pressure classes for 4-inch through 12-inch PVC pressure pipe with cast-iron pipe equivalent O.D.'s shall conform to the requirements of

AWWA C900. The dimensions for 14-inch through 36-inch PVC transmission pipe with cast-iron outside diameters shall conform to the requirements of AWWA C905.

B. Additives and Fillers: Unless otherwise provided in alternate qualification procedures of PPI-TR3, compounds which have a Hydrostatic Design Basis (HDB) of 4000 psi at 73.4 degrees F for water shall not contain additives and fillers that exceed the recommended values in Table 1, Part Y of PPI-TR3 (e.g., allowable content range for calcium carbonate is 0.0-5.0 parts per hundred of resin). If requested by the ENGINEER, the additive and filler content shall be determined using the pyrolysis method as specified in ASTM D 2584.

C. Joints: All joints for buried PVC pipe shall be either an integral bell manufactured on the pipe or a separate coupling, both employing an elastomeric gasket. The bell and coupling shall be the same thickness as the pipe barrel, or greater thickness. The sealing ring groove in the coupling shall be of the same design as the groove in cast iron fittings and valves available from local water works supply distributors. Where shown, restrained joint pipe shall be ductile iron pipe. No restrained joint PVC pipe will be allowed.

D. Joint Deflection: Deflection at the joint shall not exceed 1.5 degrees or the maximum deflection recommended by the manufacturer. No deflection of the joint shall be allowed for joints which are over-belled or not belled to the stop mark.

2.4 FITTINGS

A. Fittings:

1. Fittings shall be per ASTM D2466, Cell Classification 12454-B, bearing NSF seal, socket, Schedule 80 ASTM D2467.

B. Expansion Joints:

1. White Teflon bellows type having two convolutions, with 316L stainless steel flanges, drilled 150 psi ANSI standard, and stainless steel reinforcing bands.

2. Joints shall be rated for the operating pressure indicated in the Line Summary of Contract Drawings or 150 psi, whichever is greater, and 180 degrees F maximum operating temperature.

3. Joints shall be provided with tie rod assemblies designed to sustain the force developed by 1-1/2 times the operating pressure indicated in the Line Summary of Contract Drawings or 150 psi, whichever is greater.

4. Rubber washers for vibration dampening shall be provided on expansion joint control units for compression control.

5. Manufacturers:

   a. Technova;
   b. Or equal.

C. Pipe Couplings:

1. Couplings for PVC pipe shall be furnished for use on radius cut or standard roll grooved pipe ends. Couplings shall be ductile iron conforming to ASTM A536.

2. Gaskets: Materials of gaskets shall be EPDM.

3. Fasteners: All bolts, nuts, and washers shall be made of Type 316 stainless steel, unless otherwise noted.

4. Manufacturers:

   a. Victaulic;
   b. Or equal.

D. Solvent Cement:

1. Unless otherwise specified, all PVC piping shall be of solvent-welded construction.

2. Primer shall be per ASTM F656.

3. Solvent cement shall be per ASTM D 2564, CPVC / PVC for Sodium Hypochlorite.

4. Manufacturers:

   a. Weld-on 724 IPS;
   b. Or equal.

2.5 PIPE FLANGES

A. Flanges:

1. Class 150 Flat Face PVC, ASTM D1784, Socket Schedule 80 ASTM D2467.

B. Blinds Flanges:

1. Class 150 Flat Face PVC, ASTM D1784.

C. Gaskets:

1. Teflon, Class 150 ANSI Full Face.

D. Bolts:

1. Studs: 316 Stainless Steel ASTM 193 Grade B8M.

2. Nuts: 316 Stainless steel ASTM 194 Grade 8M.

3. Washers: 316 Stainless Steel ANSI B18.22.1.

4. Assemble with anti-seize compound.

2.6 VALVES

A. Fasteners: All bolts, nuts, and washers shall be made of Type 316 stainless steel, unless otherwise noted.

B. Ball Valves:

1. Sizes 1/2" - 3":

a. Class: 230 psi at 70°F, socket true union.
b. Type: Full port.
c. Body: PVC.
d. Ball: PVC.
e. Seat: Teflon (PTFE).
f. O-rings: EPDM.
g. Stem: PVC.
h. Operator: Manual.
i. Manufacturers:

(1) Asahi Type 21, Asahi Duo. Block;
(2) Or equal.

C. Check Valves:

1. Sizes 1/2" - 2":

a. Class: 150 psi at 70°F, socket true union.
b. Type: Ball Check.
c. Body: PVC.
d. Ball: PVC.
e. Seat: Teflon (PTFE).
f. Manufacturers:

(1) Asahi; Hayward.
(2) Or equal.

2. Sizes 3" - 4":

a. Class: 100 psi at 70°F, 150 Flat Face Flanged.
b. Type: Ball Check.
c. Body: PVC.
d. Ball: PVC.
e. Seat: Teflon (PTFE).
f. Manufacturers:

(1) Asahi;
(2) Or equal.

PART 3 - EXECUTION

3.1 GENERAL

A. All laying, jointing, testing for defects and for leakage shall be performed in the presence of the INSPECTOR, and shall be subject to his approval before acceptance. All material found during the progress to have defects will be rejected and the CONTRACTOR shall promptly remove such defective materials from the site of the work.

B. Installation shall conform to the requirements of AWWA M23, instructions furnished by the pipe manufacturer, and to the supplementary requirements or modifications specified herein. Wherever the provisions of this Section and the aforementioned requirements are in conflict, the more stringent provision shall apply.

3.2 HANDLING AND STORAGE

A. Handling: Pipe, fittings and accessories shall be carefully inspected before and after installation and those found defective shall be rejected. Pipe and fittings shall be free from fins and burrs. Before being placed in position, pipe, fittings, and accessories shall be cleaned, and shall be maintained in a clean condition. Proper facilities shall be provided for lowering sections of pipe into trenches. Under no circumstances shall pipe, fittings or any other material be dropped or dumped into trenches.

B. Storage: Pipe should be stored, if possible, at the job site in unit packages provided by the manufacturer. Caution should be exercised to avoid compression damage or deformation to bell ends of the pipe. Pipe should be stored in such a way as to prevent sagging or bending and protected from exposure to direct sunlight by covering with an opaque material while permitting adequate air circulation above and around the pipe. Gaskets should be stored in a cool, dark place out of the direct rays of the run, preferably in original cartons.

3.3 TRENCHING AND BACKFILL

A. Trench excavation and backfill shall conform to the requirements of Section 02310 - Earthwork, and as specified herein. The minimum backfill compaction in the pipe zone shall be 90 percent of maximum density per ASTM D1557.

3.4 INSTALLATION

A. Pipe shall be supported at its proper elevation and grade, care being taken to secure firm and uniform support. Wood support blocking will not be permitted. The full length of each section of pipe and fittings shall rest solidly on the pipe bed, with recessed excavation to accommodate bells, joints, and couplings. Anchors and supports shall be provided where necessary and where indicated on the drawings for fastening work into place. Fittings shall be independently supported.

B. Short lengths of pipe shall be used in and out of each rigid joint or rigid structure. Piping that does not allow sufficient space for proper installation of jointing material shall be replaced by one of proper dimensions. Blocking or wedging between bells and spigots will not be permitted.

C. Joints shall be installed according to manufacturer's recommendations. Trenches shall be kept free of water until joints have been properly made. The maximum combined deflection at any coupling shall be in accordance with the manufacturer's recommendations.

D. Pipe shall be cut by means of saws, power driven abrasive wheels or pipe cutters, which will produce a square cut. No wedge-type roller cutters will be permitted. After cutting, the end of the pipe shall be beveled using a beveling tool, portable type sander or abrasive disc.

E. Pipe joints shall be solvent-welded in accordance with the manufacturer's instructions.

3.5 INSTALLATION OF COPPER WIRE

A. PVC pipelines shall be provided with No. 10 A.W.G. bare copper wire laid along the top of the pipe and held in place with ties or hitches of the same kind of wire spaced not more than 13 feet apart, or metallic locating tape laid along the centerline of the pipe trench at a depth of 18 inches below finish grade. In such case, the CONTRACTOR shall furnish manufacturer's literature, completely describing the tape proposed to be furnished. No tape shall be used prior to receipt of written approval of the ENGINEER.

3.6 SERVICE CONNECTIONS

A. Service Connections: Direct tapping will not be permitted. Double strap bronze service clamps shall be used for all service connections. Service clamps shall have a bearing area of sufficient width along the axis of the pipe, so that the pipe will not be distorted when the saddle is made tight. An internal shell cutter shall be used to drill through the corporation stop to minimize PVC shavings, retain the coupon, and reduce stress. Single fluted shell cutters or twist drills are not acceptable. Lubricate the cutting and tapping edges of the tool with cutting lubricant. Make the cuts slowly and use the follower very lightly - do not force cutter through pipe wall. Shell cutter shall have sufficient throat depth to handle the heavy wall PVC pipe. Maximum outlet size permitted with service clamps or saddle is 2 inches.

B. Tapping sleeves and valves shall be used for all outlet sizes greater than 2 inches in diameter. Tapping sleeves shall be assembled and installed in accordance with the manufacturer's recommendations.

3.7 CONNECTIONS TO EXISTING PIPELINES

A. The CONTRACTOR shall locate all underground improvements and install the pipelines to the depths shown on the drawings. Where the new work is to be connected to existing pipelines, the CONTRACTOR shall make its arrangements with the serving utility well in advance of the connections, to allow adequate time for dewatering of the existing line, if necessary, and shall expedite the work to minimize water outages to the users. Where sections of existing distribution mains are taken permanently out of service and abandoned in place, the cut ends shall be plugged solid with concrete to a depth of not less than one pipe diameter.

3.8 FIELD TESTING AND DISINFECTION

A. Field testing and disinfection of fresh or potable water pipe installations shall conform to the requirements of Section 02515 - Water Pipeline Testing and Disinfection.

B. Field testing of all pipe installations other than fresh or potable water piping shall be done in conformance with Section 15620 - Pipe System Testing.

3.9 PIPE SUPPORTS

A. Pipe supports, hangers, anchors, and guides shall be in accordance with the requirements of Section 15340 - Hangers and Supports.

3.10 PROTECTIVE COATING

A. Protective coating shall be provided in accordance with the requirements of Section 09800 - Protective Coating.

END OF SECTION

THIS PAGE INTENTIONALLY LEFT BLANK

SECTION 15700
DUCTILE IRON PIPE, FITTINGS, AND VALVES

PART 1 - GENERAL

1.1 THE REQUIREMENT

A. Ductile iron pipe for water and other liquids shall be furnished in the sizes, classes, grades, or nominal thickness and joint types as specified herein or indicated on the Contract drawings.

B. It shall be the responsibility of the CONTRACTOR to furnish and install all ductile iron piping systems specified herein and as shown on the Contract drawings. Each system shall be installed complete with all applicable fittings, flanges, hangers, supports, anchors, expansion joints, flexible connections, valves, wall castings, sleeves, and accessories to provide a functional system as specified.

C. The CONTRACTOR shall be responsible for all insulation, lining and coating, piping identification, testing, cleaning, disinfecting, excavation, backfill and/or encasement specified herein or as shown on the Contract drawings.

D. The CONTRACTOR shall furnish all tools, equipment, materials, and supplies and shall perform all labor necessary to complete installation of ductile iron piping systems as shown on the Contract drawings and specified herein.

1.2 RELATED WORK SPECIFIED ELSEWHERE

A. Section 02310 - Earthwork.

B. Section 15620 - Pipe System Testing.

C. Section 02515 - Water Pipeline Testing and Disinfection.

D. Division 17 Instrumentation and Controls, applicable sections, Electric, Hydraulic, and Pneumatic Valves and Operators.

E. Division 16 Electrical, applicable sections.

F. Section 09800 - Protective Coatings.

G. Section 15610 - Piping, General.

H. Section 15340 - Hangers and Supports.

I. Section 15615 - Valves, General.

1.3 REFERENCE SPECIFICATIONS, CODES, AND STANDARDS

A. Comply with the reference specifications of the GENERAL REQUIREMENTS.

B. Commercial Standards:

ANSI/ASME B16.1	Gray Iron Pipe Flanges and Flanged Fittings: Classes 25, 125, and 250.

ANSI/ASME B18.22.1	Plain Washers.
ANSI/AWWA C104/A21.4	Cement-Mortar Lining for Ductile-Iron Pipe and Fittings for Water.
ANSI/AWWA C110/A21.10	Ductile-Iron and Gray-Iron Fittings for Water.
ANSI/AWWA C111/A21.11	Rubber-Gasket Joints for Ductile-Iron Pressure Pipe and Fittings.
ANSI/AWWA C115/A21.15	Flanged Ductile-Iron Pipe with Ductile-Iron or Gray-Iron Threaded Flanges.
ANSI/AWWA C150/A21.50	Thickness Design of Ductile-Iron Pipe.
ANSI/AWWA C151/A21.51	Ductile-Iron Pipe, Centrifugally Cast, for Water.
ANSI/AWWA C153/A21.53	Ductile-Iron Compact Fittings for Water Service.
ANSI/AWWA C500	Metal-Seated Gate Valves for Water Supply Service.
ANSI/AWWA C504	Rubber-Seated Butterfly Valves.
ANSI/AWWA C507	Ball Valves, 6 In. Through 48 In.
ANSI/AWWA C508	Swing-Check Valves for Waterworks Service, 2 In. Through 24 In.
ANSI/AWWA C509	Resilient-Seated Gate Valves for Water Supply Service.
ANSI/AWWA C600	Installation of Ductile-Iron Water Mains and Their Appurtenances.
ANSI/AWWA C606	Grooved and Shouldered Joints.
ASTM A126	Specification for Gray Iron Castings for Valves, Flanges, and Pipe Fittings.
ASTM A193	Specification for Alloy-Steel and Stainless Steel Bolting Materials for High Temperature or High Pressure Service and Other Special Purpose Applications.
ASTM A194	Specification for Carbon and Alloy Steel Nuts for Bolts for High Pressure or High Temperature Service, or Both.
ASTM A276	Specification for Stainless Steel Bars and Shapes.
ASTM A395	Specification for Ferritic Ductile Iron Pressure-Retaining Castings for Use at Elevated Temperatures.
ASTM A536	Specification for Ductile Iron Castings.
ASTM B62	Specification for Composition Bronze or Ounce Metal Castings.
ASTM D698	Test Methods for Laboratory Compaction Characteristics of Soil Using Standard Effort.
ASTM D1557	Test Methods for Laboratory Compaction Characteristics of Soil Using Modified Effort.

1.4 CONTRACTOR SUBMITTALS

A. The CONTRACTOR shall submit complete shop drawings for approval in accordance with SUBMITTALS of the GENERAL REQUIREMENTS and as specified herein.

B. Shop drawings shall include all ductile iron pipes, fittings, flanges, gaskets, couplers, hangers, supports, wall castings, sleeves, valves, and all required appurtenances indicated on the

Contract drawings or as specified herein necessary to provide a complete, operable piping system as specified.

C. The CONTRACTOR shall submit for review and approval complete piping lay-out drawings showing piping, fittings, couplers, hangers, supports, wall castings, sleeves, and all required appurtenances indicated on the Contract drawings or as specified herein necessary to provide a complete, operable piping system as specified. Layout drawings shall indicate all interfaces with other systems being installed which may cause interference with the piping system being installed.

D. It is the responsibility of the CONTRACTOR to coordinate all work being performed and review all shop drawings to insure that no unnecessary interferences exist.

E. The CONTRACTOR shall submit as part of the shop drawings for ductile iron piping a statement from the pipe manufacturer certifying that all pipes is being fabricated per the requirements of these specifications.

1.5 QUALITY ASSURANCE

A. The CONTRACTOR shall comply with SAMPLING, TESTING, AND FABRICATION INSPECTION of the General Requirements, as required by the INSPECTOR.

B. Inspection of ductile iron pipe manufacturing, grooving, lining and coating shall be at the discretion of the INSPECTOR.

C. All wall castings shall be shop inspected.

D. The CONTRACTOR shall be responsible for providing access to manufacturing and/or fabricating facilities at all times when so requested by the INSPECTOR.

E. Manufacturer shall perform Notched Charpy impact tests on at least one sample machined from the pipe wall during each hour to assure the desired toughness of the pipe.

F. Manufacturer shall perform Hydrostatic testing on pipe in conformance with AWWA C151.

G. Each pipe shall have clearly marked on each piece the words "DUCTILE IRON", the weight, class (nominal thickness) and the casting date.

H. Each piece of grooved end pipe shall have the groove type (flexible or rigid) clearly marked on each end of the pipe.

I. All valves shall be tested in accordance with manufacturer's recommendation and applicable AWWA/ANSI specifications.

1. Shop Inspection: All valves shall be shop inspected in accordance with Section 15615 - Valves, General.

PART 2 - PRODUCTS

2.1 GENERAL REQUIREMENTS

A. All pipes, fittings, flanges, and valves shall be carefully examined for cracks and other defects prior to shipment. All defective pipes, fittings, flanges, and valves shall be rejected and replaced.

B. All pipes and equipment shall be supported in accordance with Section 15340 -Treatment Plant Pipe Supports and Mechanical Joint Restraints.

C. Lining: All pipes and fittings shall be cement lined per ANSI/AWWA C104/A21.4.

D. Coating: All pipes, fittings, flanges, and valves shall be provided with coating in accordance with Section 09800 -Protective Coatings.

E. Ductile iron piping systems shall have design temperature limit of 200 degree F, unless otherwise noted.

F. Fasteners: All bolts, nuts, and washers shall be made of Type 316 stainless steel, unless otherwise noted.

G. Insulating connections: Protection shall be provided at all dissimilar metal connections.

1. General: Insulating gaskets, sleeves, washers, bushings, unions, couplings, or flanges, as appropriate, shall be used for joining pipes of dissimilar metals, and for piping systems where corrosion control and cathodic protection are required regardless of whether or not shown on Contract drawings.

2. Material: Insulating connections shall be in accordance with the requirements of Section 15610 - Piping, General.

2.2 DUCTILE IRON PIPE

A. General: Ductile iron pipe shall be manufactured in accordance with ANSI/AWWA C151/A21.51 and Cement Lined per ANSI/AWWA C104/A21.4.

B. Thickness: Ductile iron pipe shall be provided in accordance with the thickness class listed below:

PIPE SIZE	MINIMUM THICKNESS CLASS
4" to 16"	53
18"	54
20"	55
24" and LARGER	56

1. Thickness complies with ANSI/AWWA C150/A21.50 for minimum pipe wall thickness for threaded flanges.

2.3 FITTINGS

A. Fasteners: All bolts, nuts, and washers shall be made of Type 316 stainless steel, unless otherwise noted.

B. Grooved and Shouldered Fittings:

1. Sizes 4" - 36": Grooved Ductile Iron per ANSI/AWWA C606-06, Wall Thickness per ANSI/AWWA C110/A21.10 or C153/A21.53, Center-to-End dimensions per ANSI/AWWA C110/A21.10, Cement Lined per ANSI/AWWA C104/A21.4.

PIPE SIZE	MAX. WORKING PRESSURE PSI
4"	500
6" - 8"	400
10" - 12"	350
14" - 18"	250
20" and LARGER	150

2. Couplings: Per ANSI/AWWA C606-06 with Buna-N Rubber Gasket.

C. Mechanical or Push-on Joint Fittings:

1. Only when specified or shown on Contract drawings, all ductile iron rubber gasket, push-on, or mechanical joint fittings shall be manufactured in accordance with ANSI/AWWA C110/A21.10.

2. Joints: Per ANSI/AWWA C111/A21.11 with Buna-N Rubber Gasket.

2.4 PIPE FLANGES

A. Flanges:

1. Sizes 4" - 48": Class 125 Flat Face, drilled per ANSI B16.1, Ductile Iron, Threaded, ANSI/AWWA C115/A21.15.

B. Blind Flanges:

1. Sizes 4" - 48": Class 125 Flat Face, drilled per ANSI B16.1, Ductile Iron.

C. Gaskets:

1. Sizes 4" - 48": Buna-N Rubber, 1/8" Thick, Full Face.

D. Bolts:

1. Studs: 316 Stainless Steel ASTM 193 Grade B8M.

2. Nuts: 316 Stainless steel ASTM 194 Grade 8M.

3. Washers: 316 Stainless Steel ANSI B18.22.1.

4. Assemble with anti-seize compound.

2.5 VALVES

A. General:

1. All valves shall comply with the requirements of Section 15615, "Valves, General."

2. Valves with pneumatic, hydraulic, and electric motor operators and controls shall be in accordance with Division 17, "Instrumentation and Control" of these specifications.

3. Valves with manual operators shall be as specified herein.

B. Fasteners: All bolts, nuts, and washers shall be made of Type 316 stainless steel, unless otherwise noted.

C. Ball Valves:

1. Sizes 1/2" - 2":

a. Class: 150 psi, Threaded ends.
b. Type: Full port.
c. Body: Carbon Steel.
d. Ball: 316 Stainless Steel.
e. Seat: Teflon (PTFE).
f. Seals: Teflon (PTFE).
g. Stem: 316 Stainless Steel.
h. Operator: Manual, Lever.
i. Manufacturers:

(1) Conbraco Industries, Inc., Apollo Valves.
(2) Flow-Tek, Inc.
(3) Metso Automation/Jamesbury.
(4) NIBCO, Inc.
(5) Or equal.

2. Sizes 3":

a. Class: 150 psi, 150 Flat Face Flanged.
b. Type: Full port.
c. Body: Carbon Steel.
d. Ball: 316 Stainless Steel.
e. Seat: Teflon (PTFE).
f. Seals: Teflon (PTFE).
g. Stem: 316 Stainless Steel.
h. Operator: Manual, Lever.
i. Manufacturers:

(1) Conbraco Industries, Inc., Apollo Valves.
(2) Flow-Tek, Inc.
(3) Metso Automation/Jamesbury.
(4) NIBCO, Inc.
(5) Or equal.

D. Butterfly Valves:

1. Sizes 4" and Larger: Per ANSI/AWWA C504.

a. Class: 150 psi, 125 Flat Face Flanged.
b. Body: Ductile Iron ASTM A536 65-45-12.
c. Disc: Ductile Iron ASTM A536 65-45-12 with 316 Stainless Steel disc edge.
d. Packing: Buna-N.
e. Seat: Buna-N.
f. Shaft: 316 Stainless Steel.
g. Operator: Manual, Worm gear with handwheel.
h. Manufacturers:

(1) DeZURIK/Sartell Model BAW.
(2) Mueller/Pratt Co.
(3) Or equal.

E. Check Valves:

1. Sizes 4" and Larger: Per ANSI/AWWA C508.

a. Class: 150 psi, 125 Flat Face Flanged.
b. Type: Swing Check with Outside Lever and Spring or Weight.
c. Body: Cast Iron ASTM A126 Class B.
d. Body Seat: Bronze ASTM B62.
e. Disc: Cast Iron ASTM A126 Class B.
f. Disc Seat: Buna-N.
g. Hinge Pin: Stainless Steel.
h. Spring: Stainless Steel.
i. Manufacturers:

(1) APCO Model 250.
(2) Crispin SWL Series.
(3) Kennedy, Figure 106LW or M&H, Model 159.
(4) Mueller Co., Model A-2600.
(5) Or equal.

F. Gate Valves:

1. Sizes 4" and Larger: Per ANSI/AWWA C509.

a. Class: 150 psi, 125 Flat Face Flanged.
b. Type: Resilient-Seated, Non-Rising stem.
c. Body: Cast Iron.
d. Bonnet: Cast Iron.
e. Disc: Rubber Coated Cast Iron.
f. Seats: Resilient Rubber.
g. Stem: Bronze.
h. Operator: Manual, Handwheel or Worm gear with handwheel.
i. Manufacturers:

(1) American Flow Control.
(2) M&H/Kennedy Valve Co.

(3) Mueller Co.
(4) Or equal.

G. Knife Gate Valves:

1. Sizes 2" - 10":

a. Class: 150 psi, 150 Flat Face Flanged.
b. Type: Wafer.
c. Body: 316 Stainless Steel.
d. Bonnet: 316 Stainless Steel.
e. Disc: 316 Stainless Steel.
f. Seat: Buna-N.
g. Stem: 316 Stainless Steel.
h. Trim: 316 Stainless Steel.
i. Operator: Manual, Handwheel.
j. Manufacturers:

(1) Dezurik;
(2) ITT Fabri-Valve;
(3) Or equal.

H. Plug Valves: Non-Lubricated, Eccentric Plug.

1. Sizes 4" and Larger:

a. Class: 150 WOG, 125 Flat Face Flanged.
b. Type: Non-Lubricated, Eccentric Plug, bubble-tight shut-off.
c. Body: Cast Iron.
d. Plug: Cast Iron.
e. Seat: Buna-N.
f. Operator: Manual, Worm gear with handwheel.
g. Manufacturers:

(1) DeZurik.
(2) Clow Valve.
(3) Milliken Valve
(4) Or equal.

PART 3 - EXECUTION

3.1 HANDLING

A. Pipe, fittings, and accessories shall be handled in a manner that will insure installation in sound, undamaged condition.

B. Pipe and fittings with cement mortar or glass lining shall be handled with rubber covered hooks or other type of equipment to prevent damage to the cement lining.

C. Bare fork lift arms, hooks, or chains shall not be inserted into open ends.

D. Pipe and fittings in which the lining has been damaged shall be immediately removed from the job site and replaced.

3.2 STORAGE

A. All pipe and fittings shall be stored off the ground.

B. Pipe ends shall be covered to prevent foreign matter from entering the pipe during storage.

C. Pipe shall be stacked using suitable lumber between rows to prevent damage to pipe.

D. Any pipe that becomes damaged or unidentifiable due to improper storage shall be rejected and immediately removed from the job site.

3.3 REPAIR OF CEMENT MORTAR LINING

A. When approved and witnessed by the INSPECTOR, small and readily accessible damaged areas of cement mortar lining may be repaired in conformance with ANSI/AWWA C104/A21.4 and the following:

1. Cut out the damaged lining to the metal, with square edges.

2. Thoroughly wet the cut out area and adjoining lining.

3. With the damaged area cleaned and the adjoining lining wet, spread the mortar evenly over the area to be patched.

4. After the lining patch has become firm and adheres well to the surface, finish it with a wet 3" or 4" paint brush or similar soft bristle brush.

5. The repaired lining shall be kept moist by tying canvas wet burlap over the ends of the pipe or fitting for 24 hours.

6. After the lining patch is dry and hard, the asphaltic coating shall be replaced using approved coating material.

B. Repair mortar shall be in conformance with ANSI/AWWA C104/A21.4 and the following formula:

1. Cement Mortar mix by volume:

   a. 3 parts Portland Cement.
   b. 2 parts clean sand.
   c. Necessary clean water for 5" to 8" slump.

2. Sand shall be clean, free of clay, and screened through a No. 20 screen.

3.4 CUTTING PIPE

A. Cutting of pipe shall be done in a neat manner, without damage to the pipe or the lining.

B. Cuts shall be smooth, straight, and at right angles to the pipe axis.

C. Pipe shall be cut using a portable guillotine saw, abrasive wheel "cut-off" saw, or milling cutter only. Use of gas torches for cutting pipe will not be permitted.

D. Field cut holes for saddles shall be with mechanical cutters. Gas torch cutting will not be permitted.

E. After cutting, the end of the pipe shall be dressed with a file or power grinder to remove all roughness and sharp edges.

F. All damaged or removed cement mortar lining shall be repaired in accordance with Section 3.3 of these specifications.

3.5 CLEANING

A. The interior of all pipe and fittings shall be thoroughly cleaned of all foreign matter prior to installation, and shall be kept clean until the work has been accepted.

B. Before jointing, all joint contact surfaces shall be wire brushed, wiped clean, and kept clean until jointing is completed.

C. Flange faces shall be wire brushed and cleaned to remove all oil, grease, loose primer, mill scale or any other foreign matter which could affect the proper seating of the gasket.

D. When pipe installation is stopped, precautions shall be taken to prevent foreign material from entering the pipe.

E. Prior to testing, the entire pipeline shall be flushed until the flushing water runs clear and clean.

F. Cleaning for final acceptance shall be in conformance with Section 02515 - Water Pipeline Testing and Disinfection.

G. Cleaning of fresh (Potable/Industrial) water lines shall be in accordance with these specifications, County of Los Angeles Department of Health requirements, and shall be done under the supervision of the INSPECTOR and the Plant Fresh Water Supervisor.

3.6 ALIGNMENT

A. Piping shall be installed to the lines and grades indicated on the Contract drawings.

B. Pipelines intended to be straight shall be laid straight Deflections from a straight line or grade shall not exceed the values stipulated in Table 5 of ANSI/AWWA C600, unless specially designed approved bells and spigots are provided.

C. Batter boards, laser beam equipment, or survey shall be used in all pipe installations to maintain alignment and grade.

D. Batter boards, if used, shall be erected at intervals not to exceed 25 feet.

E. All pipe subgrades shall be determined and checked by survey.

F. If laser equipment is used, periodic elevation measurements shall be made with survey equipment to verify accuracy of grade or elevation. If such measurements indicate thermal deflection of the laser due to differences between ground temperature and the air temperature within the pipe, steps shall be taken to prevent further thermal deflections.

3.7 AS-BUILT DRAWINGS

A. The CONTRACTOR shall provide surveyed "as-built" drawings for all piping installed.

B. "As-built" drawings shall be provided for buried pipe installations as well as pipe installed in tunnels, galleries, inside buildings, or above ground outside.

C. For buried pipe installations, surveyed "as-built" shall include the elevation and location of pipe, valves, and all other pertinent information on the installation, as well as all existing piping or structures in the immediate area.

D. For buried pipe installations, survey shall be taken of location and elevations of all piping installed prior to any encasement or backfill.

E. For buried, encased piping, survey shall be taken both prior to encasement and after the encasement is in place.

F. Drawings shall be forwarded to the ENGINEER for review and approval within five days after installation is completed.

G. Progress payment will be withheld for all pipe installations for which "as-built" drawings are not received as specified.

3.8 LAYING PIPE

A. Buried pipe shall be protected from lateral displacement by use of the specified pipe embedment and/or encasement.

B. Under no circumstance shall pipe be laid in water.

C. All pipes will be laid on native material unless otherwise indicated on the Contract drawings.

D. All pipe subgrade shall be compacted to 95% of maximum density per ASTM D1557, unless otherwise indicated on the Contract drawings.

E. All subgrade shall have compaction tests taken and be approved by the INSPECTOR prior to pipe installation.

F. When pipe laying is interrupted, or stopped at the end of the work shift, the open ends of pipe shall be sealed with a watertight plug, or other means acceptable to the INSPECTOR, to prevent water from entering the pipe.

G. All fresh (Potable/Industrial) water piping shall be completely encased in blue concrete after testing per Section 3.21 of this specification. No pipe will be encased prior to testing and without approval of the INSPECTOR.

3.9 FIELD JOINTS

A. All joints in buried locations shall be grooved-end type "flexible" joints unless otherwise indicated in these specifications or on the Contract drawings.

B. All joints of piping above ground outside, in tunnels, galleries, or inside buildings shall be grooved-end type "rigid" joints unless otherwise indicated in these specifications or on the Contract drawings.

C. All buried ductile iron pipe joints shall be field coated with a minimum 12 mils of an approved thixotropic coal tar coating. The coating shall cover the entire joint, including fasteners.

D. When specified or indicated on the Contract drawings, bells on flush mounted wall castings and wall sleeves shall be mechanical joint type with tapped holes for tie rods or stud bolts.

E. When specified or indicated on the Contract drawings, all wall castings other than flush mounted castings and wall sleeves shall be standard mechanical joint flanged joints as indicated.

F. Insulating Connections: All insulating connections shall be installed in accordance with manufacturer's printed instructions. Care shall be exercised to prevent damage to insulating fittings, while making up the joints.

3.10 GROOVED END JOINTS

A. When specified or indicated on the Contract drawings, grooved end couplings shall be installed in accordance with AWWA C606 and the manufacturer's recommendations and instructions.

B. Completed joints in piping above grade or within tunnels, galleries or buildings shall be rigid and shall not allow angular deflection or longitudinal movement.

C. No grooved joints in buried piping.

D. Except for closure pieces approved by the INSPECTOR, field grooving of pipe will not be permitted.

1. All field grooving allowed will be in strict accordance with AWWA C606.

2. Only grooving tools designed for cut-grooving of ductile iron pipe will be allowed for field grooving. Roll-grooving of field grooved pipe will not be allowed.

3. Cut-grooving tools shall be designed to be driven around a stationary pipe, shall have integral pipe stop to provide proper groove depth, and stops in the tool to provide proper dimension from the pipe end to the groove ("A" dimension).

4. Prior to beginning field grooving operations, the CONTRACTOR shall submit for approval the grooving tools intended for use.

5. All field grooving will be done in the presence of and approved by the INSPECTOR.

E. The outside surface of the pipe between the groove and the pipe end shall be smooth and free from deep pits or swells.

F. All rust, loose scale, oil, grease, and dirt shall be removed prior to installation of the coupler.

G. Following installation and before backfill or encasement, all joints in buried piping shall be thoroughly coated with a minimum of 12 mils of approved coal tar coating.

1. Joints may be wrapped with a minimum of 40 mils of approved pipe tape wrap.

3.11 MECHANICAL JOINTS

A. When specified or indicated on the Contract drawings, mechanical joints shall be carefully assembled in accordance with ANSI/AWWA C110/A21.10 and ANSI/AWWA C111/A21.11 and the manufacturer's recommendations.

B. If effective seating is not obtained, the joint shall be disassembled, thoroughly cleaned, and reassembled.

C. Bolts shall be uniformly tightened to the torque values listed in Appendix A of ANSI/AWWA C111/A21.11.

D. Over tightening of bolts to compensate for poor installation will not be permitted.

E. Holes in mechanical joints with tie rods shall be carefully aligned to permit installation of the tie rods.

F. All mechanical joints shall be restrained.

G. In flange and mechanical joint pieces, holes in the mechanical joint bells and the flanges shall straddle the top (or side for vertical piping) centerline. The top centerline shall be marked on each flange and mechanical joint piece at the foundry.

H. Minimum Number of Tie Rods:

PIPE SIZE	**OPERATING PRESSURE (PSI)**					
	50	75	100	125	150	200
3", 4", 6"	2	2	2	2	2	2
8"	2	2	2	2	4	4
10"	2	4	4	4	4	6
12"	2	4	4	6	6	6
14"	4	6	6	8	8	10
16"	6	6	6	8	8	12
18"	6	6	8	10	10	
20"	8	10	10	10	12	
24"	10	10	12	16		
30"	6	8	10	12	14	18
36"	8	10	14	16	20	
42"	6	8	12	14	16	22
48"	8	10	14	18	20	28

3.12 PUSH-ON JOINTS

A. When specified or indicated on the Contract drawings, joints shall be installed in conformance with ANSI/AWWA C111/A21.11 and the pipe manufacturer's instructions and recommendations for proper jointing operations.

B. All joint surfaces shall be properly lubricated with approved heavy vegetable soap solution immediately before the joint is completed.

C. All push-on joints shall be restrained.

D. Lubricant shall be suitable for use in potable water, shall be stored in closed containers, and shall be kept clean at all times.

E. Each spigot end of the pipe shall be suitably beveled to facilitate assembly.

3.13 FLANGED JOINTS

A. When specified or indicated on the Contract drawings, flanges shall conform to ANSI B16.1, B16.2, and B21.10.

B. Bolts shall be tightened gradually and at a uniform rate to facilitate uniform gasket compression.

C. Care shall be taken when connecting to pumping equipment to insure that pipe stresses are not transmitted to the pump flanges.

D. All flanged piping connecting to pumping equipment shall be permanently supported so that accurate matching of bolt holes and uniform contact over the entire surface of abutting pump and piping flanges are obtained before the installation of any bolts in these flanges.

E. Pump connection piping shall be free to move parallel to its longitudinal centerline while the bolts are being tightened.

F. Each pump shall be leveled, aligned, and placed into position, but shall not be grouted until the initial fit-up and alignment of the pipe is completed.

G. Each pump shall be grouted before final bolting of the connecting piping.

3.14 FLANGED COUPLING ADAPTERS

A. When specified or indicated on the Contract drawings, flanged coupling adapters shall be installed in strict accordance with manufacturer's recommendations and instructions.

3.15 MECHANICAL COUPLINGS

A. When specified or indicated on the Contract drawings, mechanical couplings shall be installed in accordance with the manufacturer's recommendations and instructions.

B. A space of at least 1/4", and not more than 1", shall be left between the pipe ends.

C. All assembly bolts shall be uniformly tightened so that the coupling is free from leaks and all parts of the coupling are square and symmetrical with the pipe.

D. Following installation of the coupling, damaged areas of shop coatings of the pipe and coupling shall be repaired to the satisfaction of the INSPECTOR.

E. All mechanical couplings shall be restrained.

3.16 WALL CASTINGS

A. Unless otherwise specified or indicated on the Contract drawings, wall castings shall be provided where ductile iron pipe passes through concrete walls.

B. Where a flange and mechanical joint piece is to connect to a mechanical joint wall casting, the bolt holes in the bell of the wall casting shall straddle the top (or side for vertical piping) center line of the casting and shall align with the bolt holes in the flange and mechanical joint piece. The top center line shall be marked on the wall casting at the foundry.

3.17 WALL SLEEVES

A. Wall sleeves are to be provided where ductile iron pipe passes through concrete floors and where otherwise specified or indicated on the Contract drawings.

B. Wall sleeves are to be sealed using modular casing seals ("link seals") and approved caulking on both sides of the floor penetration.

3.18 REDUCERS

A. Reducers, adjacent to flow meters and pumps or in other locations as specified or indicated on the Contract drawings, shall be eccentric pattern, installed with the straight side on top so that air traps are not formed. All other reducers shall be concentric pattern.

3.19 OUTLETS

A. Where a 12" or smaller branch outlet is specified or indicated on the Contract drawings, and the diameter of the line pipe is at least twice the diameter of the branch, either a tee or factory welded-on boss shall be used.

B. Connections of gauges to 6" and smaller pipe shall be made using a tee complete with blind flange drilled and tapped to accept the gauge piping specified.

C. Connections of gauges to 8" and larger piping shall be made by means of a factory welded-on boss.

D. Tapping saddles shall be used for "hot taps" in specified instances or as shown on the Contract drawings.

1. Use of tapping saddles must be approved in writing by the ENGINEER prior to use in every instance.

3.20 CONNECTIONS TO EXISTING PIPING

A. Connections between new work and existing piping shall be made using fittings submitted and approved by the ENGINEER for each separate condition encountered.

B. Each connection to existing pipe shall be made at a time and under conditions which will least impact normal plant operations, and as authorized in writing by the ENGINEER.

C. The CONTRACTOR is responsible for making provisions for cutting of existing pipe when necessary, using approved mechanical means. Flame cutting of pipe will not be allowed.

D. The CONTRACTOR is responsible for making provisions for dewatering existing lines and for disposal of water from the dewatering operation.

E. Prior to construction, the CONTRACTOR shall submit for review and approval detailed procedures for pressure testing and the making of final connections to existing lines.

F. When connecting to existing fresh (Potable/Industrial) water lines, all new piping and fittings shall be cleaned and disinfected prior to making the connection.

1. Provisions shall be made to prevent any cross-connection and contamination of existing lines.

2. Trench water, mud, or other contaminants shall not be allowed to enter the lines.

G. The CONTRACTOR is responsible for disinfection and chlorination of all fresh (Potable/Industrial) water lines after connections are made in conformance with these specifications.

3.21 CONCRETE ENCASEMENT

A. All fresh (Potable/Industrial) water piping shall be encased in blue concrete, per the detail in the Contract drawings.

B. All other pipe encasement shall be installed where indicated on the Contract drawings, per the detail in the Contract drawings.

C. Concrete and reinforcement for encasement shall be as specified in the cast-in-place concrete section.

D. All pipes to be encased shall be suitably supported and blocked in proper position.

E. All pipes to be encased shall be anchored to prevent floating.

F. All pipes to be encased shall be tested as specified and the INSPECTOR will approve the pipe installation prior to encasement.

3.22 REACTION ANCHORAGE

A. All buried piping shall have thrust blocks placed at all changes of direction, tees, y-branches, valves, and at ends of pipe runs.

B. All piping with mechanical couplings or mechanical joints subject to internal pressure shall be anchored to prevent separation of joints.

C. All mechanical joint tees, y-branches, bends deflecting 22-1/2 degrees or more, and plugs which are installed in piping shall be provided with approved retainer glands.

D. When placing thrust blocks, the concrete shall extend from the pipe to solid, undisturbed earth, and all joints shall remain accessible for repair.

E. The dimensions of all concrete blocking shall be as indicated on the Contract drawings, or as directed by the INSPECTOR to accommodate field conditions.

F. If adequate support against undisturbed earth cannot be obtained, metal harness anchorages shall be provided.

1. Metal harness anchorages shall consist of steel rods extending across the joint and securely anchored to the pipe.

G. All reaction anchorage and/or seismic anchorage shall be installed prior to pressure testing of any pipe.

H. Seismic anchorage for piping installed above ground outside, inside tunnels, galleries, or buildings shall be in conformance with the City of Los Angeles Building Code.

3.23 PRESSURE AND LEAKAGE TESTING

A. All pipe installations shall be hydrostatically tested for a period of two hours at pressure specified.

B. All pressure testing shall be done in the presence of, and approved by, the INSPECTOR.

C. All pipe supports and reaction anchorage/seismic anchorage must be installed prior to pressure testing.

1. Buried pipe may be center-loaded to preclude movement prior to testing.

D. The high point of all pipe installed shall be vented.

E. All leaking piping must be completely retested following repairs of leaks.

F. Acceptable leakage is zero.

G. If changes are made to piping installation after initial testing, such as addition of valves, routing changes, branches, etc., the entire line must be retested.

H. Testing against valves will not be permitted. All sections of pipe to be tested must be blind-flanged.

I. All pipelines tested shall be approved by the INSPECTOR, and a Pipeline Test Report completed for each test.

3.24 DISINFECTION

A. Disinfection of ductile iron pipe shall be performed in conformance with Section 02515, "Water Pipeline Testing and Disinfection."

3.25 VALVE INSTALLATION AND TESTING

A. Installation and field testing of valves shall be performed in accordance with manufacturer's recommendations, AWWA Standards, and the applicable provisions of Section 15615, "Valves, General."

B. All field testing shall be witnessed and approved by the INSPECTOR.

END OF SECTION
(SEE ATTACHMENT)

ATTACHMENTS TO SECTION 15700

Attachments to Technical Specifications Section 15700 consists of one (1) document, as follows:

ATTACHMENT NUMBER	TITLE OF ATTACHMENT	NUMBER OF PAGES IN THIS ATTACHMENT
15700-A1	Pipeline Test Report	1

PIPELINE TEST REPORT

DATE:_____

JOB NUMBER:_____ **ELEMENT:**_____

INITIAL TEST:_____ **RETEST:**_____

SYSTEM TESTED:_____

SECTION TESTED:_____

PLAN
PAGE#:_____

PIPE MATERIAL:_____

TYPE OF TEST:_____

TEST MEDIUM:_____

TEST PRESSURE:_____

TEST DURATION:_____

TEST START TIME:_____**FINISH:**_____

PRESSURE LOSS/GAIN:_____

REASON FOR LOSS/GAIN:_____

_____

ACTION TAKEN:_____

_____

TEST PERFORMED BY:_____
Print Name

_____
DATE NAME OF CONTRACTOR

TEST WITNESSED AND ACCEPTED BY:_____
Print Name

_____
DATE BUREAU OF CONTRACT ADMINISTRATION

c/c City of Los Angeles Project Engineer
Project Test Report File
DIV15.MCH\15005.WP

THIS PAGE INTENTIONALLY LEFT BLANK

SECTION 15720
STEEL PIPE - FABRICATED SPECIALS

PART 1 - GENERAL

1.1 THE REQUIREMENT

A. The Contractor shall furnish all tools, equipment, materials, and supplies and shall perform all labor required to complete the work as indicated on the Drawings and specified herein.

B. This Section covers fabricating, installing, and testing all bends, reducers, wyes, tees, crosses, outlets, manifolds, and other steel plate specials, complete, in place, in accordance with the requirements of the Contract Documents.

1.2 RELATED WORK SPECIFIED ELSEWHERE

A. Section 02515 Water Pipeline Testing.

B. Section 05500 Metal Fabrications.

C. Section 09800 Protective Coating.

D. Section 15610 Piping, General.

E. Section 15615 Valves, General.

F. Section 15620 Pipe System Testing.

1.3 REFERENCE SPECIFICATIONS, CODES, AND STANDARDS

A. Comply with the reference specifications of the GENERAL REQUIREMENTS.

B. Comply with the current provisions of the following Codes and Standards.

AWWA C200	Steel Water Pipe 6 in. and Larger.
AWWA C207	Steel Pipe Flanges for Waterworks Service.
AWWA C208	Dimensions for Fabricated Steel Water Pipe Fittings.
ASTM A53	Standard Specification for Pipe, Steel, Black, and Hot-Dipped, Zinc-Coated, Welded and Seamless.
ASTM A234	Specification for Piping Fittings of Wrought Carbon Steel and Alloy Steel for Moderate and Elevated Temperatures.
AWWA M-11	Steel Water Pipe - A Guide for Design and Installation.

1.4 CONTRACTOR SUBMITTALS

A. Submittals shall be made in accordance with the GENERAL REQUIREMENTS.

B. Shop Drawings: The CONTRACTOR shall submit shop drawings and laying diagrams of all pipe, fittings, flanges, valves, and appurtenances.

C. Certifications: The CONTRACTOR shall furnish a certified affidavit of compliance for all pipe and other products or materials furnished under this Section of the Specifications and other products or materials.

D. All expenses incurred in making samples for certification of tests shall be borne by the CONTRACTOR.

1.5 QUALITY ASSURANCE

A. Shop Testing of Steel Plate Specials: Upon completion of the welding, but prior to lining and coating, each steel plate special shall be bulkheaded and tested under a hydrostatic pressure of 1.5 times the design pressure; provided, that if straight pipe used in fabricating the specials has been previously tested and meets the requirements of the applicable piping section, no further hydrostatic testing will be required; or provided, that all other welded seams are tested by the liquid penetrant inspection procedure conforming to ASTM E 165, under Method "B" and "Leak Testing" or where applicable by the soap and compressed air method at an air pressure of 25 psi. Any pin holes or porous welds which may be revealed by the test shall be chipped out and rewelded and the pipe or fitting retested.

B. During the manufacture of the pipe, the INSPECTOR shall be given access to all areas where manufacturing is in process and shall be permitted to make all inspections necessary to confirm compliance with the Specifications.

C. Tests: Except as modified herein, all materials used in the manufacture of the pipe shall be tested in accordance with the requirements of this Section of the Specifications, as specified in the referenced standards, as possible.

D. The CONTRACTOR shall perform paid material tests in accordance with the requirements of the Contract Documents. The INSPECTOR shall have the right to witness all testing conducted by the CONTRACTOR provided that the CONTRACTOR's schedule is not delayed for the convenience of the INSPECTOR.

E.

F. In addition to the tests specifically required, the INSPECTOR may request additional samples of any material for testing by the ENGINEER. The additional samples shall be furnished at no additional cost to the city.

PART 2 - PRODUCTS

2.1 GENERAL

A. Specials are defined as fittings, closure pieces, bends, reducers, wyes, tees, crosses, outlets, manifolds, and other steel plate specials wherever located, and all piping above ground or in structures.

2.2 DESIGN

A. Design: Except as otherwise provided herein, materials, fabrication and shop testing of straight pipe shall conform to the requirements of ANSI/AWWA C200, and shall conform to the dimensions of ANSI/AWWA C208. The minimum thickness of plate for pipe from which specials are to be fabricated shall be the greater of that determined by the following two formulas:

(1) $$T = \frac{P_w D/2}{Y/S_w}$$ (2) $$T = \frac{P_t D/2}{Y/S_t}$$

Where:

T	=	Steel cylinder thickness in inches
D	=	Outside diameter of steel cylinder in inches
P_w	=	Design working pressure in psi
P_t	=	Design transient pressure in psi
Y	=	Specified minimum yield point of steel in psi
S_w	=	Safety factor of 2.5 at design working pressure
S_t	=	Safety factor of 1.875 at design transient pressure

B. In no case shall the design stress at design working pressure (Y/S_w) for mortar-coated steel pipe exceed 16,500 psi or 22,000 psi at design transient pressure (Y/S_t), nor shall plate thickness be less than the thickness of adjacent mainline pipe or the following:

Nominal Pipe Diameter (in)	Pipe Manifolds Piping Above Ground Piping in Structures	Elbows Bends Reducers
24 and under	3/16-in	10-ga
25 to 48	1/4-in	1/4-in
over 48	5/16-in	5/16-in

C. Pipe installed on saddle supports shall be designed to limit the longitudinal bending stress to a maximum of 10,000 psi. Design shall be in accordance with the provisions of Chapter 7 of AWWA M-11.

2.3 FABRICATION AND MATERIALS

A. General: Reinforcement for wyes, tees, outlets, and nozzles shall be designed in accordance with AWWA Manual M-11. Reinforcement shall be designed for the design pressure specified or shown and shall be in accordance with the details shown. Specials and fittings shall be equal in pressure design strength and shall have the same lining and coating as the adjoining pipe. Unless otherwise shown, the minimum radius of elbows shall be 2.5 times the pipe diameter and the maximum miter angle on each section of the elbow shall not exceed 11.25 degrees.

B. Specials and fittings that cannot be mechanically lined and coated shall be lined and coated by hand-application, using the same materials as are used for the pipe and in accordance with the applicable AWWA or ASTM Standards. Coating and lining applied in this manner shall provide protection equal to that specified for the pipe. Fittings may be fabricated from pipe that has been mechanically lined and/or coated. Areas of lining and coating that have been damaged by such fabrication shall be repaired by hand-applications in accordance with applicable AWWA or ASTM Standards.

C. Moderate deflections and long radius curves may be made by means of beveled joint rings, by pulling standard joints, by using short lengths or pipe, or a combination of these methods;

provided that pulled joints shall not be used in combination with bevels. The maximum total allowable angle for beveled joints shall be 5 degrees per pipe joint. Bevels shall be provided on the bell ends. Mitering of the spigot ends will not be permitted. The maximum allowable angle for pulled joints shall be in accordance with the manufacturer's recommendations or the angle which results from a 3/4-inch pull out from normal joint closure, whichever is less. All horizontal deflections or fabricated angles shall fall on the alignment.

D. All vertical deflections shall fall on the alignment and at locations adjacent to underground obstructions, points of minimum earth cover, and pipeline outlets and structures. The pipe angle points shall match the angle points shown.

E. Outlets, Tees, Wyes, and Crosses: Outlets 12-inch and smaller may be fabricated from Schedule 30 or heavier steel pipe in the standard outside diameters, i.e., 12-3/4-inch, 10-3/4-inch, 8-5/8-inch, 6-5/8-inch, and 4-1/2-inch.

F. The design of outlet reinforcement shall be in accordance with the procedures given in Chapter 13 of AWWA Manual M-11, except that the design pressure, P, used in the M-11 procedure shall equal the greater of 1.25 P_w or 0.9375 P_t. Unless otherwise shown, outlets 2-inches in diameter and smaller need not be reinforced.

G. In lieu of saddle or wrapper reinforcement as provided by the design procedure in Manual M-11, pipe or specials with outlets may be fabricated in their entirety of steel plate having a thickness equal to the sum of the pipe wall plus the required reinforcement.

H. Where required by the M-11 design procedure crotch plate reinforcement shall be furnished.

I. Steel Welding Fittings: Steel welding fittings shall conform to ASTM A 234.

J. Ends for Mechanical-Type Couplings: Except as otherwise provided herein, where mechanical-type couplings are indicated, the ends of pipe shall be banded with Type C collared ends using double fillet welds. Where pipe 12-inch and smaller is furnished in standard schedule thicknesses, and where the wall thickness equals or exceeds the coupling manufacturer's minimum wall thickness, the pipe ends may be grooved.

K. Lining: All requirements pertaining to thickness, application and curing of lining specified for straight pipe shall apply to specials, with the following proviso. If the special cannot be lined centrifugally, it shall be lined by hand. In such case, the lining shall be reinforced with 2-in by 4-in by No. 12 welded wire fabric positioned approximately in the center of the lining. The wires spaced 2-in on centers shall extend circumferentially around the pipe with the fabric securely fastened to the pipe. Splices shall be lapped 4-inches and the free ends tied or looped to assure continuity.

L. Coating: All requirements pertaining to thickness, application and curing of coating specified for straight pipe shall apply to specials. Unless otherwise shown, the mortar coating on the buried portion of a pipe section passing through a structure wall shall extend to the center of the wall, or to the wall flanges, if one is indicated. Pipe above ground or in structures shall be field-painted as specified in Section 09800 "Protective Coating."

M. Marking: A mark indicating the true vertical axis of the special shall be placed on the top and bottom of the special.

PART 3 - EXECUTION

3.1 GENERAL

A. Unless otherwise provided, the CONTRACTOR shall furnish and install all fittings, closure pieces, bends, reducers, wyes, tees, crosses, outlets, manifolds, and other steel plate specials, bolts, nuts, gaskets, jointing materials, and all other appurtenances as shown and as required to provide a complete and workable installation. Where pipe support details are shown, the supports shall conform thereto and shall be placed as indicated; provided, that the support for all exposed piping shall be complete and adequate regardless of whether or not supporting devices are specifically shown. Where shown, concrete thrusts blocks and welded joints shall be provided.

B. Installation shall conform to the requirements of AWWA M23, instructions furnished by the pipe manufacturer, and to the supplementary requirements or modifications specified herein. Wherever the provisions of this Section and the aforementioned requirements are in conflict, the more stringent provision shall apply.

C. At all times when the work of installing pipe is not in progress, all openings into the pipe and the ends of the pipe in trenches or structures shall be kept tightly closed to prevent entrance of animals and foreign materials.

D. The CONTRACTOR shall take all necessary precautions to prevent the pipe from floating due to water entering the trench from any source, shall assume full responsibility for any damage due to this cause and shall at its own expense restore and replace the pipe to its specified condition and grade if it is displaced due to floating.

E. The CONTRACTOR shall maintain the inside of the pipe free from foreign materials and in a clean and sanitary condition until its acceptance by the INSPECTOR.

3.2 LAYING

A. Trenches shall be in a reasonable dry condition when the pipe special is laid. Necessary facilities including slings shall be provided for lowering and properly placing the pipe sections in the trench without damage. The pipe and specials shall be laid to the line and grade shown and they shall be closely jointed to form a smooth flow line.

B. Immediately before placing each section of pipe in final position for jointing, the bedding for the pipe shall be checked for firmness and uniformity of surface.

3.3 INSTALLATION

A. Pipe shall be supported at its proper elevation to be secured firmly and with uniform support. Anchors and supports shall be provided where necessary and where indicated on the drawings. Fittings shall be independently supported.

B. Short lengths of pipe shall be used in and out of each rigid joint or rigid structure. Piping that does not allow sufficient space or proper installation of jointing material shall be replaced by one of proper dimensions. Blocking or wedging between bells and spigots will not be permitted.

C. Joints shall be installed according to manufacturer's recommendations. Trenches shall be kept free of water until joints have been properly made. The maximum combined deflection at any coupling shall be in accordance with the manufacturer's recommendations.

3.4 CONNECTIONS TO EXISTING PIPELINES

A. The CONTRACTOR shall locate all underground improvements and install the pipelines to the depths shown on the drawings. Where the new work is to be connected to existing pipelines, the CONTRACTOR shall make its arrangements with the serving utility well in advance of the connections, to allow adequate time for dewatering of existing line, if necessary.

3.5 FIELD TESTING AND DISINFECTION

A. Field Testing and disinfection of all pipe installations that are not fresh nor potable water piping shall be done in conformance with Section 15620 – Pipe System Testing.

3.6 PIPE SUPPORTS

A. Pipe supports, hangers, anchors, and guides shall be in accordance with the requirements of Section 15340 – Hangers and Supports.

END OF SECTION

SECTION 15770
PIPE SUPPORTS AND MECHANICAL JOINT RESTRAINTS

PART 1 - GENERAL

1.1 THE REQUIREMENT

A. The CONTRACTOR shall provide all tools, supplies, materials, equipment, and all labor necessary for the furnishing, construction, and installation of all pipe supports, hangers, guides, and anchors shown, specified, or required for a complete and operable piping system, in accordance with the requirements of the Contract Documents.

1.2 RELATED WORK SPECIFIED ELSEWHERE

A. Section 09800 - Protective Coating.

B. Section 15610 - Piping, General.

1.3 REFERENCE SPECIFICATIONS, CODES, AND STANDARDS

A. Comply with the reference specifications of the GENERAL REQUIREMENTS.

B. Comply with the current provisions of the following Codes and Standards.

ANSI/ASME B31.1	Power Piping.
ASTM A 123	Specifications for Zinc (Hot-Dip Galvanized) Coatings on Iron and Steel Products.

1.4 CONTRACTOR SUBMITTALS

A. Shop Drawings: The CONTRACTOR shall furnish complete shop drawings of all pipe supports, hangers, anchors, and guides, as well as calculations for special supports and anchors, in accordance with GENERAL REQUIREMENTS.

1.5 QUALITY ASSURANCE

A. Comply with testing procedures as specified in the reference standards.

B. The CONTRACTOR shall comply with SAMPLING, TESTING, AND FABRICATION INSPECTION of the General Requirements, as required by the INSPECTOR.

C. Inspection of pipe support manufacturing and fabrication shall be conducted at the discretion of the INSPECTOR. The CONTRACTOR shall be responsible for providing access to manufacturing and/or fabrication facilities at all times when so requested by the INSPECTOR.

PART 2 - PRODUCTS

2.1 GENERAL REQUIREMENTS

A. Code Compliance: Code Compliance: All pipe supports shall comply with the City of Los Angeles Building Code Seismic Zone IV requirements and Section 2-2312 of the State Building Code, Part 2, Title 24, California Administrative Code, as applicable.

All supports and parts thereof shall conform to the requirements of ANSI/ASME B31.1 unless otherwise supplemented or modified by these specifications.

Supports and mechanical joint restraints for plumbing piping shall comply with the latest edition in effect of the City of Los Angeles Plumbing Code.

Supports for Heating, Venting, and Air Conditioning shall comply with the latest edition in effect of the City of Los Angeles Mechanical Code.

B. Structural Members: Wherever possible, pipes shall be attached to structural members. Where it is necessary to frame structural members between existing members, such supplementary members shall be provided by the CONTRACTOR at no additional cost to the CITY. All supplementary members shall be in accordance with the requirements of the building code and the American Institute of Steel Construction.

C. Pipe Hangers: Pipe hangers shall be capable of supporting the pipe in all conditions of operation. They shall allow for free expansion and contraction of the piping and shall prevent excessive stress on equipment. All hangers shall have a means of vertical adjustment after erection. Hangers shall be designed so that they cannot become disengaged by any movement of the supported pipe. Hangers subject to shock, seismic disturbances, or thrust imposed by the actuation of safety valves, shall include hydraulic shock suppressors. All hanger rods shall be subject to tensile loading, only.

D. Hangers Subject to Horizontal Movements: At hanger locations where lateral or axial movement is anticipated, suitable linkage shall be provided to permit such movement. Where horizontal pipe movement is greater than 1/2-inch, or where the hanger rod deflection from the vertical is greater than 4 degrees from the cold to the hot position of the pipe, the hanger rod and structural attachment shall be offset in such a manner that the rod is vertical in the hot position.

E. Spring-Type Hangers: Spring-type pipe hangers shall be provided for piping subject to vibration or vertical expansion and contraction, such as engine exhausts and similar piping. All spring-type hangers shall be sized to the manufacturer's printed recommendations and the loading conditions encountered. Variable spring supports shall be provided with means to limit misalignment, buckling, eccentric loading, or to prevent overstressing of the spring, and with means to indicate at all times the compression of the spring. The support shall be designed for a maximum variation in supporting effort of 25 percent for the total travel resulting from thermal movement.

F. Thermal Expansion: Wherever expansion and contraction of piping is expected, a sufficient number of expansion loops or joints shall be provided, together with the necessary rolling or sliding supports, anchors, guides, pivots, and restraints. They shall permit the piping to expand and contract freely in directions away from the anchored points and shall be structurally suitable to withstand all loads imposed.

G. Heat Transmission: Supports, hangers, anchors, and guides shall be so designed and insulated, that excessive heat will not be transmitted to the structure or to other equipment.

H. Riser Supports: Where practical, risers shall be supported on each floor with riser clamps and lugs, independent of the connected horizontal piping.

I. Freestanding Piping: Free-standing pipe connections to equipment, like chemical feeders, pumps, etc., shall be firmly attached to fabricated steel frames made of angles, channels, or I-beams anchored to the structure. Exterior, free-standing overhead piping shall be supported on fabricated pipe stands, consisting of pipe columns anchored to concrete footings, with horizontal, welded steel angles and U-bolts or clamps, securing the pipes.

J. Submerged Supports: All submerged piping shall be supported with hangers, brackets, clips, or fabricated supports and anchors of Type 316 Stainless Steel.

K. Point Loads: All meters, valves, equipment, and other point loads shall be independently supported to prevent undue pipe stress and failure. No meter, valve, or other equipment shall be supported by the piping.

L. Noise Reduction: To reduce transmission of noise in piping systems, all copper tubes in buildings and structures shall be wrapped with a 2-inch-wide strip of rubber fabric or similar, suitable material, at each pipe support, bracket, clip, or hanger.

M. All anchor bolts installed as part of a pipe support system, regardless of location or application, shall be manufactured of Type 316 Stainless Steel.

N. All hanger rods, bolts, u-bolts, turn buckles, aircraft cable, nuts, and washers shall be Type 316 stainless steel.

O. No "all thread" rod will be allowed. All hanger rods will be solid rod threaded as necessary to accommodate the hanger.

P. Pipe supports for brass and copper pipe shall be copper plated, or insulators provided. Protection shall be in the form of a rubber insert between the pipe and the support.

Q. Rubber hose and flexible tubing shall be provided with continuous angle or channel support.

R. Unless otherwise indicated on the drawings, piping shall be supported at 1-1/2" out from the face of walls and at least 3" below ceilings.

2.2 MANUFACTURED SUPPORTS

A. Unless otherwise specified or indicated, pipe supports shall be fabricated of manufacturer's standard materials.

B. Manufacturers:

1. Mueller.

2. A.Y. McDonald.

3. Or equal.

2.3 MECHANICAL JOINT RESTRAINTS

A. The mechanical joint restraint shall be incorporated into the design of the follower gland. The restraint mechanism shall consist of a plurality of individually actuated gripping surfaces to maximize restraint capability. Glands shall be manufactured of ductile iron conforming to ASTM A536-80.

The gland shall be such that it can replace the standardized mechanical joint gland and can be used with the standardized mechanical joint gland and can be used with the standardized mechanical joint bell conforming to ANSI/AWWA C111/A21.11 and ANSI/AWWA C153/A21.53 of latest version.

The restraining glands shall have a pressure rating equal to that of the pipe on which it is used. The restraining glands shall have been tested to UNI-B-13-92, be listed by Underwriters Laboratories, and be approved by Factory Mutual.

B. Manufacturers:

1. Ebaa Iron.

2. Romac Industries.

3. Or Equal.

2.4 COATING

A. Galvanizing: Unless specified to be fabricated of stainless steel, all fabricated pipe supports shall be blasted to a white clean condition after fabrication and hot dip galvanized in accordance with ASTM 123.

B. Other Coatings: Other than those supports specified to be manufactured of stainless steel, all manufactured pipe supports shall receive protective coatings in accordance with the requirements of Section 09800 "Protective Coating". "Protective Coating" shall be applied in addition to hot-dip galvanizing. Galvanizing is not to be considered as a "Protective Coating".

C. The CONTRACTOR is responsible for requesting SHOP INSPECTION of all hot dip galvanizing of pipe supports.

PART 3 - EXECUTION

3.1 INSTALLATION

A. General: All pipe supports, hangers, brackets, anchors, guides, inserts and seismic bracing shall be fabricated per these specifications and installed in accordance with the specified spacings and manufacturer's approved submittals per ANSI/ASME B31.1. All concrete inserts for pipe hangers and supports shall be coordinated with the form work and installed per approved drawings.

B. All embedded pipe supports shall be in place prior to placement of cast-in-place concrete.

C. Power actuated drive pins are not acceptable for installing pipe hangers.

D. Any pipe supports/hangers installed in existing concrete shall be anchored by the use of Type 316 Stainless Steel anchors.

E. Contact between dissimilar metals shall be prevented. Dissimilar metals shall be isolated by the use of approved coal tar epoxy, zinc chromate, or approved isolation pads.

F. All connect points for hanger rods shall be locked off using lock nuts or double nuts.

3.2 FABRICATION

A. Shop Inspection: Shop inspection shall be required for all welded pipe hangers and supports. It shall be the responsibility of the CONTRACTOR to request shop inspection as required.

END OF SECTION

SECTION 15780
PIPING IDENTIFICATION SYSTEMS

PART 1 - GENERAL

1.1 THE REQUIREMENT

A. The CONTRACTOR shall furnish, mark, and install identification devices for all exposed piping and piping in accessible chases and areas above ceilings with panels, and valves using color bands, lettering, flow direction arrows, and related permanent identification devices, and all appurtenant works, in accordance with the requirements of the Contract Documents.

1.2 RELATED WORK SPECIFIED ELSEWHERE

A. Section 09800 - Protective Coating

B. Divisions 11 and 15 - Piping, Valves and Appurtenances as applicable.

1.3 REFERENCE SPECIFICATIONS, CODES AND STANDARDS

A. Comply with the reference specifications of the GENERAL REQUIREMENTS.

1.4 CONTRACTOR SUBMITTALS

A. Submittals shall be made in accordance with GENERAL REQUIREMENTS.

B. The following submittals and specific information shall be provided:

1. The CONTRACTOR shall submit samples of all types of identification devices to be used in the work.

2. The CONTRACTOR shall submit to the ENGINEER, for approval, a list of suggested wording for all valve tags prior to fabrication.

1.5 QUALITY ASSURANCE (NOT USED)

PART 2 - PRODUCTS

2.1 IDENTIFICATION OF PIPING

A. All exposed piping and piping in accessible chases and areas above ceilings with panels, including stainless steel, galvanized steel, copper, PVC, and Fiberglass RTR piping, shall be completely and totally painted for identification purposes. Piping shall be identified with lettering or tags designating the service of each piping system, shall have flow directional arrows, and shall be completely painted and color coded as scheduled below. All piping scheduled to be color coded shall be completely painted or coated with the indicated colors.

B. Each pipe identification shall consist of color coding in accordance with Paragraph 3.4 IDENTIFICATION SCHEDULE, a painted label and a directional flow arrow. The painted label and directional arrow shall be placed between color bands. When more than one color band is used the different color bands shall be painted adjacent. Piping identification shall be located in accordance with Paragraph 3.3 PIPE IDENTIFICATION LOCATION.

C. Color Bands and Arrows: Pipe color bands shall be painted on the pipe. Paper or plastic banding of pipe shall not be acceptable. Arrows shall be of the same color as the lettering and shall point away from the lettered labels in the direction of the flow. Chlorinated service shall be identified by a yellow second band. Color band size shall be as follows:

Pipe Size	Color Band Size
less than 1" diameter	1" wide
1" to 12" diameter	1 pipe diameter wide
greater than 12" diameter	12" wide

Yellow Second Band:

less than 1" diameter	½" wide
1" to 12" diameter	½ pipe diameter
greater than 12" diameter	6" wide

D. For cases where there are insulated lines wrapped with aluminum sheathing, stainless steel sheathing, or gray fabric, the background color shall be applied to a 24-inch length of pipe section and color band centered within the 24-inch field of background color.

E. Paint Colors: Paint colors shall conform to the following designations:

Color	Federal Number
Light Blue	15200
Dark Blue	15102
Red	11105
Yellow	13655
Orange	12246
White	17875
Light Brown	10219
Dark Brown	10080
Light Green	34540
Green	14187
Black	17038
Silver	17178
Grey	16314

Purple	27144
Purple*	Pantone 512C

*For Reclaimed Water per Los Angeles County Reclaimed Water Advisory Committee.

F. Lettering: Contents identification labels shall be stenciled directly on pipes. Black identification letters shall be used where the background pipe color is light, and white identification letters where the background color is dark. The size of the letters for identification labels shall be as follows:

Pipe Outside Diameter	Letter Size
5/8" to 1"	5/16" high
1" to 3"	3/4" high
over 3"	2" high

2.2 EXISTING IDENTIFICATION SYSTEMS

A. In installations where existing piping identification systems have been established, the CONTRACTOR shall continue to use the existing system. Where existing identification systems are incomplete, utilize the existing system as far as practical and supplement with the specified system. The objective is to fully identify all new piping, valves and appurtenances to the level specified herein.

2.3 IDENTIFICATION OF VALVES AND SHORT PIPE LENGTHS

A. Identifying devices for valves and the sections of pipe that are too short to be identified with color bands, lettered labels, and arrows shall be identified with metal tags as specified herein.

B. Metal tags shall be of stainless steel with embossed lettering. All tags shall be designed to be firmly attached to the valves or short pipes or to the structure immediately adjacent to such valves or short pipes.

2.4 IDENTIFICATION OF PIPE 5/8 INCH OR SMALLER

A. Where the outside diameter of pipe or pipe covering is 5/8 inch or smaller, metal tags shall be provided instead of lettering. Tags shall have the specified identifying lettering stamped in the tag and shall be fastened to the pipe with suitable chains. Metal tags and chains shall be aluminum or stainless steel. Where tags are used, pipe shall be color coded as specified in Paragraph 3.4.

2.5 MISCELLANEOUS

A. Electrical conduit shall be painted to match ceiling or wall surfaces as directed by the Engineer.

B. Vent lines shall be painted to match the surfaces that they adjoin.

C. Valve handwheels and levers shall be painted red.

D. Hoist hooks and blocks shall be painted yellow with black stripes.

PART 3 - EXECUTION

3.1 GENERAL

A. All labels and identification tags shall be installed in accordance with the manufacturer's printed instructions and shall be neat and uniform in appearance. All such tags or labels shall be readily visible from all normal working locations.

3.2 VALVE TAGS

A. Valve tags shall be permanently attached to the valve or structure by means of 2 stainless steel bolts or screws.

B. The wording on the valve tags shall describe the exact function of each valve, e.g., "HWR-BALANCING," "CLS THROTTLING", "RAS-PUMP SHUT-OFF," etc.

3.3 PIPE IDENTIFICATION LOCATION

A. Straight lines of pipe shall be identified at intervals of 30 feet maximum, and at least once in each room unless otherwise directed by the Engineer.

B. Piping shall also be identified at a point approximately within 2 feet of all turns, ells, valves, and on the upstream side of all distribution fittings or branches and on both sides of each floor, wall or barrier through which the line passes.

C. For pipe runs of 50 feet or less the distance between bands shall be 30 inches. For pipe runs of 50 feet or more, spacing between bands shall be 72 inches.

D. Sections of pipe that are too short to be identified with color bands, lettered labels, and directional arrows shall be tagged and identified similar to valves.

3.4 IDENTIFICATION SCHEDULE

A. Application of identifying devices shall conform to the following color codes or match existing color code as directed by the ENGINEER.

MATERIAL IN PIPE	BACKGROUND COLOR/BAND COLOR(S)
Potable Water (RP Device)	Light Blue
Fresh Water (Air Gap)	Light Blue
Industrial and/or Cooling Water	
LPE	Dark Blue/Red
MPE	Dark Blue/Red
HPE	Dark Blue/Red
HPE (continuously chlorinated)	Dark Blue/Red/Yellow
Fire Water	Red
Industrial Water	Dark Blue
Cooling Water Supply-Plant Effluent	Dark Blue/Red
Cooling Water Return-Plant Effluent	Dark Blue/Red
Cooling Water Return-Industrial Water	Dark Blue
Cooling Water Supply-Industrial Water	Dark Blue

Reclaimed Water	Purple' (Pantone 512 C)
Final Effluent	Dark Blue/Red
Irrigation (continuously chlorinated eff.)	Dark Blue/Red/Yellow

Chemical Supply Lines (Extremely Dangerous)

Chlorine (gas or liquid)	Yellow
Chlorine Solution	Yellow
Sodium Hydroxide	Yellow
Chlorinator Vent And Detection Lines	Yellow
Hydrazine	Yellow
Lime Slurry	Yellow
Sodium Hypochlorite	Yellow
Ferric Chloride	Yellow
Ferrous Chloride	Yellow
Phosphoric Acid	Yellow
Concentrated Sulfuric Acid	Yellow
Dilute Sulfuric Acid	Yellow
Chemical Draw and Vent	same color as the chemical line
Dilute Acid	Yellow

Chemical Supply Lines

Polymer-Anionic	White/Yellow
-Cationic	White/Yellow
-Nonionic	White/Yellow
-Dist.	White/Yellow
-Effluent	White/Yellow
Chemical Draw and Vent	same color as the chemical line
Sulfite/Bisulfite Scrubbing Liquid	White/Yellow
Stratford Solution (Scrubbing Liquor)	White/Yellow

Sludge/Ash Transport and Process Lines

Blended Sludge	Dark Brown
Bottom Sludge	Dark Brown
Centrate (from digested sludge dewatering)	Dark Brown/Dark Blue
Centrate (H_2S Scrubbing)	White/Yellow
Circulated Sludge	Dark Brown
Digested Sludge	Dark Brown
Sulfur Slurry (H_2S Scrubber)	Dark Brown
Sludge Filtrate	Dark Brown/Dark Blue
Raw Sludge	Dark Brown
Screened Digested Sludge	Dark Brown
Waste Activated Sludge	Light Brown
Digester Cleanings	Dark Brown
Digested Sludge to Screenings	Dark Brown
Digested Sludge to Blending Tanks	Dark Brown
Digested Sludge Recirculated/Transfer	Dark Brown
Digested Sludge Withdrawal	Dark Brown
Thickened Waste Activated Sludge	Light Brown
Return Activated Sludge	Light Brown
Thickener Subnatant	Light Brown/Dark Blue
Thickener Subnatant Overflow	Light Brown/Dark Blue

Cyclone Effluent	Dark Brown/Dark Blue
Grit	Dark Brown
Mixed Liquor	Light Brown
Thickener Pressurized Recycle	Light Brown/Dark Blue
Scum	Dark Brown
Ash (hydraulic)	Light Brown
Processed Condensate	Dark Blue/Light Brown
Process Effluent	Dark Blue/Red
Final Clarifier Influent	Light Brown

Pneumatic Transport Lines

Sludge Derived Fuel	Light Green/Orange
Hot Ash	Light Green/Yellow
Sand Transport	Light Green

Air and Vacuum Supply Lines

Oxygen (gaseous)	Purple/Black
Oxygen (liquid)	Purple/Black
Combustion Air	Green
Compressed Air (non-instrument)	Green/Red
Instrument Air	Green/White
Process Air	Green
Product Air	Green/Light Green
Foul Air	Green/Grey
Nitrogen (liquid)	Green/Black
Nitrogen (gaseous)	Green/Black
Vacuum	Green
Vent Duct	same as line color

Boiler Waters

Boiler Feedwater Makeup	Dark Blue/Orange
Boiler Feedwater	Dark Blue/Orange
Continuous Blow-down	Dark Blue/Orange
Demineralized Water	Dark Blue/Orange
H. P. Condensate	Dark Blue/Orange
L. P. Condensate	Dark Blue/Orange
M. P. Condensate	Dark Blue/Orange
Intermittent Blow-down	Dark Blue/Orange
Softened Water	Dark Blue/Yellow
Reverse Osmosis Treated Water (permeate)	Dark Blue/Orange

Steam

L. P. Steam	Orange/Red
M. P. Steam	Orange/Red
H. P. Steam	Orange/Red

Lube and Hydraulic Oils

Hydraulic Oil Supply	White/Orange
Hydraulic Oil Return	White/Orange
Lube Oil	White/Orange
Drain Oil	White/Orange

Oil Vapor	White/Orange
Grease	White/Orange
Defoamant-Sludge Blending Tanks (Kerosine)	White/Orange

Carver-Greenfield Process Oils

Recovered Oil	Light Brown/Red
Fluidized Oil Makeup/Supply	Light Brown/Red
Oil/Sludge Slurry	Dark Brown/Red
Addback Slurry	Dark Brown/Orange
Centrate Oil	Light Brown/Yellow
Sludge Oil	Black/Red
Oil Vapor	White/Red

Fuel Supply

Natural Gas/LNG/Propane	Orange
Digester Gas: LP, MP, and HP	Orange
Diesel	Orange

Lab

Distilled Water	Dark Blue/Orange
Salt Water	Dark Blue/Light Green

Miscellaneous

Equipment Vent	same as equipment
Sample Line	same as line or equipment being sampled
Spare Chemical	same as chemical

Sanitary Sewer/Storm Drains

Roof Drain	Black or same color as bldg walls
Plant Drain	Black
Storm Drain	Black
Sump Pump Discharge	Black
Sanitary Sewer	Black
Sanitary Vent	Black
Influent Raw Sewage (up to primary tanks)	Grey
Demineralized Waste	Black/Yellow
Reverse Osmosis Reject	Black

END OF SECTION

THIS PAGE INTENTIONALLY LEFT BLANK

SECTION 15830
MISCELLANEOUS VALVES

PART 1 - GENERAL

1.1 THE REQUIREMENT

A. The CONTRACTOR shall furnish and install miscellaneous valves as shown and as specified herein, complete and operable including accessories and, where designated, operators, in accordance with the requirements of the Contract Documents.

1.2 RELATED WORK SPECIFIED ELSEWHERE

A. Section 15615 - Valves, General.

1.3 REFERENCE SPECIFICATIONS, CODES AND STANDARDS

A. Comply with the reference specifications of the GENERAL REQUIREMENTS and Section 15615 - Valves, General.

1.4 CONTRACTOR SUBMITTALS

A. Submittals shall be made in accordance with the GENERAL REQUIREMENTS and Section 15615 - Valves, General.

1.5 QUALITY ASSURANCE

A. QUALITY ASSURANCE shall comply with the quality requirements specified in RELATED WORK SPECIFIED ELSEWHERE above.

B. All valves shall be tested in accordance with manufacturer's recommendation and applicable AWWA/ANSI specifications.

C. Shop Inspection: All valves shall be shop inspected in accordance with Section 15615, 1.5(c) of these specifications.

PART 2 - PRODUCTS

2.1 AIR-VACUUM AND AIR-RELEASE VALVES

A. Air and Vacuum Valves: Air and vacuum valves shall be capable of venting large quantities of air while pipelines are being filled, and allowing air to re-enter while pipelines are being drained. They shall be of the size shown, with flanged or screwed ends to match piping. Bodies shall be of high-strength cast iron. The float, seat, and all moving parts shall be constructed of Type 316 stainless steel. Seat washers and gaskets shall be of a material insuring water tightness with a minimum of maintenance. Valves shall be designed for minimum 150 psi water-working pressure, unless otherwise shown.

B. Air-Release Valves: Air-release valves shall vent accumulating air while system is in service and under pressure and be of the size shown and shall meet the same general requirements as specified for air and vacuum valves except that the vacuum feature will not be required. They shall be designed for a minimum water-working pressure of 150 psi, unless otherwise shown.

C. Combination Air Valves: Combination air valves shall combine the characteristics of air and vacuum valves and air release valves by exhausting accumulated air in systems under pressure and releasing or re-admitting large quantities of air while a system is being filled or drained, respectively. They shall have the same general requirements as specified for air and vacuum valves.

D. Sewage Air Release Valves: Sewage air release valves shall vent accumulating gases during system operation. They shall have long float stems and bodies to minimize clogging. The same general requirements shall apply as specified for air and vacuum valves. Each sewage air release valve shall be furnished with the following backwash accessories, fully assembled on the valve:

1. Inlet shut-off valve.

2. Blow-off valve.

3. Clear water inlet valve.

4. Rubber supply hose.

5. Quick disconnect couplings.

E. Manufacturers, or Equal:

1. APCO (Valve and Primer Corporation)

2. Crispin (Multiplex Manufacturing Company)

3. Val-Matic (Valve and Manufacturing Corporation)

4. Or equal.

2.2 BACKFLOW PREVENTER VALVES

A. General: Backflow preventers shall work on the reduced pressure principle. They shall consist of 2 spring-loaded check valves, automatic differential pressure relief valve, drain valves, and shut-off valves. The body material shall be bronze or cast iron for a working pressure of not less than 150 psi, with bronze or stainless steel trim. Drain lines with air gaps shall be provided.

B. Manufacturers, or Equal:

1. Cla-Val Company

2. Watts Regulator Company

3. APCO (Valve and Primer Corporation)

4. Kennedy Valve Manufacturing Co. (ITT Grinnel)

5. Febco.

6. Hersey Products, Inc.

7. Or Equal.

2.3 SMALL PRESSURE REDUCING VALVES (Air, chemical and water systems)

A. General: Small air and water pressure reducing valves shall be of the spring-loaded diaphragm type with a minimum pressure rating of 250 psi, with bronze body, nickel alloy or stainless steel seat, and threaded ends. Each valve shall be furnished with built-in or separate strainer and union ends.

B. Small chemical (i.e., ammonium hydroxide, sodium bisulfite, and sodium hypochlorite) pressure reducing valves shall be of the spring-loaded diaphragm type with Teflon body, hastelloy or Teflon trim material, and Teflon seat material. Value body shall be flanged.

C. Manufacturers, or Equal:

1. A. W. Cash Valve Mfg. corp.
2. Fisher controls company.
3. Mueller Company.
4. Masoneilan Control Equipment.
5. Watts Regulator Company.
6. Wilkins Regulator (A Division of Zurn Industries).

2.4 LARGE WATER PRESSURE REDUCING VALVES

A. General: Large water pressure reducing valves shall be of the piston-type or diaphragm-actuated globe type, with cast iron body and stainless steel trim. Unless otherwise shown or specified, the valves shall have a pressure rating of not less than 150 psi, shall have 125-lb flanges, and shall have an adjustable downstream pressure range with a downstream setting as required.

B. Manufacturers, or Equal:

1. Chas. M. Bailey Company, Inc. (Division of CMB Industries)
2. Cla-Val company.
3. Golden - Anderson Valve division (G. A. Industries, Inc.)
4. Muesco, Inc.
5. Ross Valve Mfg. Co. Inc.
6. Or Equal.

2.5 CORPORATION STOPS

A. Unless otherwise shown, corporation stops shall be made of solid brass for key operation, with screwed ends with corporation thread or iron pipe thread, as required.

B. Manufacturer, or Equal:

1. Ford Meter Box Company.

2. James Jones company.

3. Mueller Company.

4. Or equal.

2.6 SOLENOID VALVES

A. Solenoid valves shall be of the size, type, and class shown and shall be designed for not less than 150 psi water-working pressure. Valves for water, air, or gas service shall have brass or bronze body with screwed ends, stainless steel trim and spring, Teflon or other resilient seals with material best suited for the temperature and fluid handled. Solenoid valves in corrosive environment shall have stainless steel bodies. For chemicals and all corrosive fluids, solenoid valves with Teflon bodies and springs or other suitable materials shall be used. General purpose enclosures for indoors shall be NEMA type 2. For explosion proof, corrosive, special purpose, or outdoor locations NEMA type 4, 7, 8, 9, 9E, 9F, or 9G enclosures shall be used, as applicable. All coil ratings shall be for continuous duty. For electrical characteristics see electrical drawings or specifications.

B. Manufacturers, or Equal:

1. For general duty:

a. Automatic Switch Company (ASCO)
b. Skimmer Valve Division of Honeywell
c. Magnatrol Valve Corporation
d. J. D. Gould Co.
e. Or equal.

2. For corrosive fluids:

a. Valcor Engineering Corporation
b. GF - Plastic Systems, Inc.

2.7 PINCH VALVES

A. Pinch valves shall be iron body with TFE Teflon sleeves and upper and lower pinch bars. Valves shall be Series 80 TFE.

2.8 SURGE CHECK VALVES

A. Surge check valves shall be Class 150, up to 6 inches in size, suitable for raw water service. Types, sizes and quantities are shown on the drawings and equipment list.

B. Valve body shall be ductile iron, bronze, or stainless stee. Shaft and bushings shall be bronze or Type 304 or 316 stainless steel. The seat shall be bronze, and the disc shall be Type 304 or 316 stainless steel. Springs may be ASTM A313 stainless steel. The zinc content of bronze in contact with water shall not exceed five percent, and the aluminum content shall not exceed two percent.

C. Manufacturers, or Equal:

1. DeZURIK.

2. Crispin.

3. Kennedy.

4. Mueller Co.

5. Or Equal.

2.9 KNIFE GATE VALVES

A. Knife gate valves shall be class 150, up to 6 inches in size, suitable for raw water service. Types, sizes and quantities are shown on the drawings and equipment list.

B. Valve body shall be ductile iron or stainless steel. Gate shall be 316 stainless steel.

C. Manufacturers, or Equal:

1. American Flow Control.

2. Kennedy Valve.

3. Mueller Co.

4. Or Equal.

2.10 PLUG VALVES

A. Plug valves shall be class 150, up to 6 inches in size, suitable for raw water service. Valves shall withstand a minimum water pressure of 150 psi.

B. Body shall be bronze, ductile iron, or stainless steel with a welded nickel seat. Seat shall withstand a minimum water pressure of 150 psi. Types, sizes and quantities are shown on the drawings and equipment list.

C. Manufacturers, or Equal:

1. DeZURIK.

2. Mueller Co.

3. Or Equal.

PART 3 - EXECUTION

3.1 INSTALLATION

A. Backflow preventers shall be installed in all potable water lines and where otherwise indicated on the contract drawings.

B. All valves shall be installed in accordance with the Manufacturer's printed recommendations.

C. All backflow preventers, as well as air and vacuum release valves, shall have piped outlets to the nearest acceptable drain, firmly supported, and installed in such a way as to avoid splashing and wetting of floors.

D. Field testing of valves shall be performed in accordance with manufacturer's recommendations and per Section 15615 - Valves, General, of these specifications.

E. All field testing shall be witnessed and approved by the INSPECTOR.

END OF SECTION

SECTION 16020
MUNICIPAL FACILITIES GENERAL ELECTRICAL REQUIREMENTS

PART 1 - GENERAL

1.01 DESCRIPTION:

A. Related Work:

1. 01810 Fundamental Commissioning Requirements.
2. 01813 Prefunctional Checklists.
3. 16560 Municipal Facilities Electrical Systems Commissioning.
4. 16570 Municipal Facilities Electrical Testing Requirements.

B. Electrical subcontractor shall attend the Commissioning pre-construction meeting and other required meetings to facilitate coordination and execution of the commissioning scope.

C. Provide pre-functional checklists and complete functional testing under the supervision of the commissioning authority, including preparation of data in form templates. Provide qualifying calibrated instrumentation needed for the prescribed testing procedures.

D. Provide the services of specialized technicians for testing and validation. Technicians may be supplied by the equipment suppliers or from qualified independent testing services.

E. Detailed descriptions of electrical commissioning requirements are provided in Section 01810 and Section 16560.

F. Comply with all provisions of the General Conditions, Supplementary Conditions and General Requirements as applicable to work of all Sections of Division 16 concerning definitions, guarantees, submittals, as-builts, clean-up, etc.

G. Examine all Technical Sections for work required to be included in work in Sections of Division 16 - Electrical Work.

H. All work of this Division shall be coordinated with work of other trades.

1.02 SCOPE

A. Required: Provide all labor, materials, equipment, tools and appliances required to furnish and install all electrical work shown on the Contract Drawings and herein specified in the Sections of Division 16 complete and operable but not limited to the following:

1. All construction power and lighting and power for testing equipment and systems through final acceptance of test.
2. Complete distribution system(s) including switchboards, panelboards, transformers, feeders, and auxiliary equipment.
3. Control wiring and devices for equipment specified in Sections of Division 16 and other Technical Sections, except where specifically indicated or noted otherwise on the Contract Drawings or in the Specifications.

4. Connection and testing of electrical equipment and controls specified in Division 16 and other technical sections, except where specifically indicated or noted elsewhere on the Contract Drawing or in the Specifications.

5. Applicable excavating, trenching, and backfilling.

1.03 WORK NOT INCLUDED

A. Furnishing all electrical or partially electrically devices related uniquely to mechanical equipment and only as specified in the Mechanical Division 15.

B. Furnishing and installing of all motors.

1.04 RELATED WORK

A. Preparation of Soils Reports, refer to Section 02310 EARTHWORK.

B. Painting of exposed raceways and equipment in DIVISION 9.

C. Commissioning requirements in DIVISION 1.

D. Municipal Facilities Electrical Commissioning Requirements in DIVISION 16.

E. Municipal Facilities Electrical Testing Requirements in DIVISION 16.

1.05 LEGAL REQUIREMENTS AND STANDARDS

A. Required: Comply with the latest, as applicable, and effective, during the progress of Contracted Work.

1. Latest Los Angeles City Electrical, Fire and Building Codes and U.B.C. Supplement.
2. California State Administrative Code, Title 24, State Building Standard.
3. (CAL/OSHA) California State Occupational Safety and Health Act.
4. California State Fire Marshal Standards.
5. Los Angeles City Department of Water and Power.
6. U.L. - Underwriters Laboratories Inc.
7. NEC - National Electrical Code.
8. ASTM - American Society of Testing and Materials.
9. Current publications of the National Fire Protection Association.
10. National and American Standards Association.

B. General Compliance as Applicable:

1. Drawings and specification requirements shall govern where they exceed Code requirements.
2. Where requirements between governing Codes and Regulations vary, the more restrictive provision shall apply.
3. Nothing contained in Contract Documents shall be construed as authority or permission to disregard or violate legal requirements.

1.06 GENERAL REQUIREMENTS

A. Permits and Inspections:

1. Apply and pay for all required electrical work (construction and installation) prescribed by legally constituted public authorities.

2. Arrange and pay for all required inspections or examinations and shall deliver "certifications" of such inspections to the City Engineer prior to acceptance of the electrical work. Obtain approved plans from the Los Angeles City Department of Building and Safety.

B. Site Inspections:

1. Carefully examine the job-site and existing facilities and compare the Contract Drawings for work coordination.

2. By act of submitting bid, it will be deemed the Contractor has made required inspections and has accepted such job-site conditions and has made allowances thereof in the preparation of "Bid" figures.

C. Verification of Dimensions: All dimensions (scaled, figured or noted) are approximate, given for estimating purposes. Before proceeding with work Contractor shall carefully check and verify all dimensions, sizes, etc. and shall assume full responsibility for proper fitting in and attachment of all materials and equipment to other equipment and to the structure.

D. Examination of the Contract Drawings:

1. Carefully study Contract Drawings and Specifications to verify if any work as laid out or indicated is contrary to or in conflict with applicable Codes and Standards. Report to the City Engineer such data prior to submittal of Bid(s).

2. The City Engineer will then instruct the Contractor on how to proceed.

3. By the act of submitting a "Bid" or "Proposal" Contractor is deemed to have made such study and has accepted all job-site conditions.

E. Substitutions:

1. Items, articles or products named on the Contract Drawings and in the Specifications are intended to establish a standard of quality and required functional performance.

2. If the Contractor desires to propose a substitution or alternate, submit a complete list with detailed specifications and manufacturer's data which differ from those specified within thirty-five (35) days after award of Contract for approval or rejection by the City Engineer.

3. If such submittals are not approved, use specified materials and equipment throughout the Electrical Work.

F. Interpretations:

1. Make all requests for interpretations of the Contract Drawings and/or Specifications to the Contractor through the Architect or City Engineer.

2. Manufacturer's or Supplier's requests for interpretations will be referred to the Contractor.

G. Submittals: Conform to applicable provisions of Section 01330 of the General Requirements and as hereinafter specified.

1. Prepare, review and coordinate schedule of submittals, determining necessary lead time for preparation, submitting, checking, and ordering and delivering materials and equipment to the job-site for timely arrival and conformance with the overall Construction schedule.

2. All submittals will be checked for general compliance with Specifications only. Contractor will be responsible for deviations from the Drawings or Specifications and for errors or omissions of any sort in the Submittals.

3. Shop drawings shall be submitted in completed groups of materials (i.e., all lighting fixtures or all switchgear, etc.). The Contractor shall add and sign the following paragraph on all equipment and materials submitted for review.

    a. "It is hereby certified that the (equipment) (material) shown and marked in this submittal is that proposed to be incorporated into the project; is in compliance with the Contract Drawings and Specifications and can be installed in the allocated spaces".

    b. Failure to add the above written statement for compliance will result in return of submittals to be reviewed.

4. All required submittals on electrical items and equipment shall include complete catalog information such as construction ratings, insulation systems, including manufacturer's certification that items or equipment meet or exceed U.L. and Trade Standards, and the Specifications.

5. Equipment Floor Plans: Submit after approval of material and/or equipment is secured. Prepare for each electrical equipment room drawn to 1/2" = 1'0" scale. Layout drawing shall be to exact scale.

6. Materials list of items and equipment proposed to be provided for the work of this Division 16 and shall include the following as applicable:

    a. Motor control centers.

    b. Conduits.

    c. Conductors.

    d. Electrical equipment layout at 1/2" = 1'-0" scale indicating exact dimensions of equipment, clearances, housekeeping pads.

    e. Disconnect switches, pullboxes and fuses.

H. Special Submissions:

1. Test Reports for the Following:

    a. Ground fault devices.

    b. Megger Readings: Ground system, motors, feeders and switchgear.

    c. Voltage Readings: Distribution, service and motors.

    d. Electrical Work Layout Plan: The Contractor will be required to layout all new electrical work with verified field dimensions in coordination with existing equipment, utilities, available access, and other new work to be installed, etc. Layout is to be reviewed and approved by LASAN maintenance staff for approval.

2. Maintenance service and operating manuals for all equipment.

3. Items as outlined in other Sections.

I. "No Exceptions Taken": Be responsible for equipment ordered and/or installed prior to receipt of shop drawings returned from the City Engineer bearing the Electrical Engineer's stamp of "No Exceptions Taken". Corrections or modifications to equipment as noted on shop drawings shall be performed or equipment removed from the job site at request of City Engineer without additional compensation.

J. Disapprovals: Any article or equipment supplied by the Contractor disapproved by the Architect or City Engineer as not conforming to the Specifications or not of proper quality or grade or suitability shall be deleted and suitable article or equipment be provided in lieu thereof in conformance with the Specifications at no added cost to the City.

K. Terminology: Generally speaking throughout this Division 16 of the Specifications when the words "or equal" or other words of similar intent and meaning are used implying judgment or decision is to be exercised, it is understood that it is the judgment, discretion, or decision of the City Engineer to which reference is made.

L. Note: Specifier should name at least two manufacturers plus the words "or equal".

M. Modification of Contract Drawings: In each case where proposed substitute material or equipment will require changes to the design of the Project as indicated on the drawings, for proper installation or operation, appropriate proposed revision drawings prepared and signed by a licensed Engineer shall be furnished by the Contractor for approval by the City Engineer. Make such drawings sufficiently complete for the proper installation and operation of the proposed substitute materials or equipment, and for construction by all of the involved trades of the proposed revisions. The cost of the drawings and the proposed revised construction shall be borne by the Contractor.

N. Record Drawings: Provide in strict accordance with applicable provisions of Section 30 in the GENERAL CONDITIONS of these Specifications concerning accurate locations of raceways, cable runs, outlets and equipment. See also applicable provisions of Section 01783-RECORD (as-built) Drawings of the GENERAL REQUIREMENTS of these Specifications.

O. Operation and Maintenance Manuals: Prior to final acceptance of Contracted Work by the City, furnish 4 bound copies of operation and maintenance manuals for all electrical equipment, as required in this Section. The contents shall include description of equipment, names of manufacturers, parts lists, model numbers, maintenance schedules, location of nearest facility for replacement parts or service, wiring and connection diagrams, internal schematic drawings, and other electrical/mechanical data necessary for operation and maintenance.

1.07 QUALITY ASSURANCE

A. General:

1. All equipment and accessories to be the product of a manufacturer regularly engaged in its manufacture.

2. Supply all equipment and accessories new, free from defects and listed by Underwriters' Laboratories, Inc. or bearing its label. Special or custom equipment must bear the label of laboratory recognized by the City of Los Angeles Department of Building and Safety.

3. Supply all equipment and accessories in compliance with the applicable standards listed in Article 1.05 of this Section and with all applicable National, State and Local codes.

4. All items of a given type shall be the product of the same manufacturer.

B. Labor: Use adequate numbers of skilled workers who are thoroughly trained and experienced in the necessary crafts and completely familiar with specifications, requirements and methods needed for proper performance of the work of Electrical Division 16.

C. Superintendence: Provide an experienced Superintendent to be in charge of erection and/or installation of electrical work together with journeymen helpers to properly unload, erect, connect, adjust, operate and test the work involved to provide a neat, workmanlike and operable installation.

1.08 LOCATION

A. The location of apparatus and equipment indicated on the Contract Drawings are approximate only and shall be changed to meet the Architectural and Structural conditions as required.

B. Any change in work which has not been installed shall be made by the Contractor without additional compensation, except changes which are caused by Architectural changes which increase or decrease the size of apparatus or materials specified or indicated on the drawings. The Contractor shall submit a detailed breakdown cost estimate of, or credit for, such changes and shall proceed only upon the written authority of the Architect and Engineer.

C. All apparatus and equipment shall be furnished and installed in a manner and in locations avoiding all obstructions, preserving head room, and keeping openings and passageways clear. Changes shall be made in locations of equipment and materials which may be necessary in order to accomplish this.

D. The drawings are essentially diagrammatic to the extent that many offsets, bends, special fittings, and exact locations are not indicated. The Contractor shall carefully study the Contract Drawings and premises in order to determine the best methods, exact location, routes, and building obstructions, etc., and shall install all apparatus and equipment in the available location.

1.09 CUTTING AND PATCHING

A. Conform to provisions of Section 01731 of the General Requirements.

B. The Contractor shall do all drilling, cutting and patching of the general construction work existing or new, rough finish and trim, which may be required for the installation of electrical equipment. All patching shall be of the same materials, workmanship and finish as the original work, and shall accurately match all surrounding work.

C. All cutting and patching shall be as approved by the Architect or his authorized representative.

1.10 PROTECTION OF WORK

A. The Contractor shall protect all work, material and equipment from damage from any cause whatsoever, and shall provide adequate and proper storage facilities during the progress of the Work. Contractor shall provide for the safety and good condition of all work until final acceptance of the work by the City, and replace all damaged or defective work, materials and equipment before requesting final acceptance.

B. The Contractor shall be held responsible for the protection and correction of the work of all trades from smears, splashes, stain or damages that might occur in the progress of the work.

1.11 WORK COORDINATION

A. The Contractor shall so order electrical work that progress will harmonize with that of other trades so that all work may proceed as expeditiously as possible.

B. So far as possible, the work has been indicated on the Contract Drawings in such positions as to suit and accommodate the work of the other trades, but the work as indicated is largely diagrammatic, and the correct finish position of all equipment and materials cannot always be indicated. Therefore, the Contractor is hereby made directly responsible for the correct placing of electrical work and the proper location and connection of electrical work in relation to the work of other trades.

1.12 JOB SAFETY

A. The Contractor shall be solely and completely responsible for the condition of the premises on which the work is performed and for the safety of all persons and property on the site during performance of the Contract. These requirements shall not be limited to normal working hours, but shall apply continuously.

B. Contractor shall conform to all governing safety regulations.

PART 2 - PRODUCTS

2.01 MATERIALS

A. All materials, items and equipment furnished under this Contract shall be new, recently manufactured and available locally.

B. All materials shall comply with applicable legal requirements and standards hereinbefore specified in this Section 16020.

C. The label of listing by UL shall appear on all materials and equipment for which standards have been established by that agency.

D. Where local or other authorities having jurisdiction have established label or approval requirements, furnish all materials and equipment with either the required labels affixed or the necessary written approval.

E. Examine the Drawings and Specifications and determine the work to be performed by the electrical and other trades. Provide the type and quantity of electrical materials and equipment necessary to complete this work and all systems in proper operation, tested and ready for use.

F. Provide and install all incidental items not indicated on the Drawings nor mentioned in the Specifications that belong to the work described or are required for complete systems.

2.02 MATERIALS LISTING

A. Required: See Subsection 1.06.G.6 of this Section 16020.

PART 3 - EXECUTION

3.01 UTILITY SERVICES (AS APPLICABLE)

A. Before any work is performed on these facilities, verify all electrical, civil, architectural and structural, dimensional and other requirements related to these facilities with the serving utility companies.

B. Should any major changes to the work indicated be necessary to complete the power and telephone systems, notify the City Engineer at once and cease all work affected until approval for required modifications has been obtained from the City Engineer.

3.02 WORK RESPONSIBILITIES

A. The drawings indicate diagrammatically the desired locations or arrangement of conduit runs, outlets, equipment, etc., and are to be followed as closely as possible. Proper judgment must be exercised in executing the work so as to secure the best possible installation in the available space and to overcome local difficulties due to space limitations or interference with structural conditions. The Contractor is responsible for the correct placement and coordination of electrical work in relation to the work of other trades. Advise appropriate trade as to locations of access panels.

B. Locations shown on architectural plans and elevations shall take precedence over electrical plan locations, but where a major conflict is evident; notify the Architect or City Engineer for instructions.

C. In the event changes in the indicated locations or arrangement are necessary due to developed conditions in the building construction or rearrangement of furnishings or equipment, such changes shall be made without extra cost, providing the change is ordered before the conduit runs, etc., and work directly connected to same are installed and no extra materials are required.

D. Where equipment is furnished by others, verify dimensions and the correct location of this equipment before proceeding with the roughing in of connections.

E. Lighting fixtures and equipment disconnects in mechanical spaces and elevator machine rooms and pits are shown in their approximate locations only. Do no install outlets, switches, equipment disconnects or fixtures until mechanical piping and ductwork are installed; then lights shall be installed in locations best suited for equipment arrangement or as directed by the City Engineer. Verify exact locations of elevator equipment disconnects, switches, receptacles and fixtures in elevator machine room and pits with the elevator equipment installer before rough in.

F. All scaled and figured dimensions are approximate of typical equipment of the class indicated. Before proceeding with any work, carefully check and verify all dimensions, sizes, etc., with the drawings to see that the equipment will fit into the spaces provided without violation of applicable codes.

G. Should any changes to the work indicated on the Drawings or described in the Specifications be necessary in order to comply with the above requirements, notify the City Engineer immediately and cease work for all parts of the Contract Work which are affected until approval for any required modifications to the construction has been obtained from the City Engineer.

H. Be responsible for any cooperative work which must be altered due to lack of proper supervision or failure to make proper provisions in time. Such changes shall be under the direction of the City Engineer and shall be made to their satisfaction.

I. Perform all work with competent and skilled personnel. Conform to provisions of Subsection 1.07.B of this Section.

J. All work, including aesthetic as well as electrical and mechanical aspects of the work, shall be of the highest quality consistent with the best practices of the trade.

K. Replace or repair, without additional compensation, any work which, in the opinion of the City Engineer does not comply with these requirements.

3.03 GENERAL INSTALLATION (AS APPLICABLE)

***** For special requirements, refer to specific equipment under other sections.

A. Unless otherwise specified elsewhere in the Specifications, do all excavating necessary for the proper installation of the electrical work in accordance with the "Earthwork" Section 02310.

B. Locations of Openings: Obtain approval for all chases, shafts and openings required for the installation of the electrical work. Cutting or drilling in any structural member is prohibited without written approval of the Architect or City Engineer. Furnish access panels as required.

C. Finish Around Sleeves: Rough edges shall be finished smooth. Space between conduit and sleeves where conduit passes through exterior walls shall be sealed to permit movement of conduit but prevent entrance of water. Space between conduit and sleeves where conduit passes through fire rated interior walls and slabs shall be sealed with approved materials to provide a fire barrier conforming to the requirements of the governing authorities having jurisdiction, use Dow Corning 3-6548 RTV silicone foam or equal by General Electric if so approved by the applicable and/or authorities having jurisdiction of the job site.

D. Wherever conduit extends through roof, furnish and install flashings in accordance with City Engineer's directions.

E. Be responsible for all cutting and patching which may be required for the proper installation of the electrical work. Work shall be performed by the trade originally installing same and paid for under this Section of the work.

F. Protect all work, materials and equipment from damage from any cause whatever and provide adequate and proper storage facilities during the progress of the work. Storage outdoors shall be weather protected and shall include space heaters to prevent condensation. Provide for the safety and good condition of all work until final acceptance of the work by the City Engineer and replace all damaged or defective work, materials and equipment before requesting final acceptance at no added cost to the City.

G. Conduit and Equipment to be installed: Clean thoroughly to remove plaster, spattered paint, cement and dirt on both exterior and interior.

H. Conduit and Equipment to be painted: Clean all conduits exposed to view in completed structure by removing plaster and dirt. Remove grease, oil and similar material from conduit and equipment by wiping with clean rags and suitable solvents in preparation for paint.

I. All Items with Factory Finish: Remove cement, plaster, grease and oil, and leave all surfaces, including cracks and corners, clean and polished. Touch up any scratched or bare spots to match finish. Factory finish may be approved as prime coat by the Architect (see "Painting" Section).

J. Site Cleaning: Remove from site all packing cartons, scrap materials and other rubbish relating to electrical installation.

K. Electrical equipment and materials exposed to public and in finished areas shall be finish-painted after installation to coordinate with surrounding walls. Surfaces shall be thoroughly cleaned for receiving painting. Paint color coordination shall be as directed by the Architect or City Engineer. Paint shall be identical to that on adjacent surfaces to insure proper matching of quality and color with surrounding areas.

3.04 EXCAVATION, CUTTING AND PATCHING

A. All excavating, trenching and backfilling required for the work of this Division shall conform to the applicable requirements of the "Earthwork" Section 02310 in the Project Specifications. All excavating and backfilling connected with electrical work, repaving all cuts and providing and maintaining all protective measures for the electrical work excavation required by the governing authorities having jurisdiction shall be performed as a part of the work of this Division.

B. At a time in advance of the work, verify all openings. Should the work of this division require it, furnish new instruction as to requirements for these openings. All cutting, patching and reinforcement of the building (subject to the City Engineer's approval) shall be performed under the Section of the Specifications under which the work was originally performed, but the coat shall be an obligation of the Contractor.

3.05 TESTS

A. Conduct resistance to ground tests by qualified personnel to measure resistance to ground at all grounding electrodes. Make tests before slabs of affected areas are poured in order that corrective measures, if requested, may be taken. Submit to the City Engineer a report showing the results of these measurements. If the resistances exceed values specified elsewhere, perform all corrective measures as directed by the City Engineer at no additional cost to City.

B. Prior to energizing any motors, measure the service voltage for phase balance and report immediately to the City Engineer if unbalance exceeds 1% from means.

C. Measure the three-phase voltage at no load and at maximum load conditions and submit to the City Engineer a report showing the results of these measurements.

D. Upon completion of the work and adjustment of all equipment, conduct an operating test for approval at such time as the Architect directs. Conduct the test in the presence of an authorized representative of the State. Demonstrate all systems and equipment to operate in accordance with all requirements of the Contract documents and to be free from all electrical and mechanical defects. Provide all systems free from short circuits and grounds and show an insulation resistance between phase conductors and ground not less than the requirements of the governing electric code. Test all circuits for proper neutral connections.

E. Complete all tests prior to final inspection of project, including corrective work based on the results of the tests.

F. Perform special tests on systems and equipment as specified herein in other sections of this division, using personnel qualified to perform such tests.

G. Measure voltage on secondary side of all transformers with full load connected and adjust taps to provide rated secondary voltage.

H. Submit to the City Engineer a report showing test voltage of L-N on the secondary's of all transformers.

3.06 PROTECTION

A. Besides the provisions of Subsection 1.10 of this Section comply with the following:

1. Protect all finish parts of the materials and equipment against damage during the progress of the work and until final completion and acceptance. Cover all materials and equipment in storage and during construction in such a manner that no finished surfaces will be damaged or marred. Keep all moving parts clean, dry and lubricated.

3.07 PRELIMINARY OPERATIONS

A. Required: Should the City require that any portion of the systems or equipment be operated prior to the final scheduled dates for completion and acceptance of the work, the Contractor shall consent. Such operation shall be under the direct supervision of, and at the expense of the Contractor, and shall not be construed as an acceptance of any of the work by the City.

3.08 CLEANING UP

A. Conform to applicable provisions of Section 01740 of the General Requirements and the following as applicable.

B. Upon completion of the work and at various times during the progress of the work, remove from the building all surplus materials, rubbish and debris resulting from the work of this division and leave the involved portions of the job-site in a neat, clean and acceptable conditions.

C. Thoroughly clean all switchgear, apparatus, exposed conduit, metal work and accessories for the work of this Division of cement, plaster and other deleterious materials; remove all grease and oil spots with cleaning solvent; carefully wipe all surfaces and scrape all cracks and corners clean.

D. Thoroughly polish all chromium and all plated work. Remove all dirt and stains from lighting fixtures.

E. Leave the entire installation in a neat, clean and usable condition.

3.09 COMPLETION

A. The work will not be reviewed for final acceptance until operating and maintenance data, manufacturer's literature, panel directories and nameplates specified herein have been approved and properly posted or installed and final cleaning of equipment and premises has been completed.

B. When the installation is complete and all adjustments have been made, operate the systems for a period of one week, during which time demonstrate to the City Engineer that the systems are completed and operating in conformance with the Specifications.

3.10 GUARANTEE

A. Conform to applicable provisions of the GENERAL CONDITIONS of these Specifications.

B. Required: Except as may be specified under other sections in the Specifications, guarantee all equipment furnished under the specifications for a period of one year from date of acceptance against defective workmanship and material, and improper installation. Upon notification of failure, correct deficiency immediately and without cost to the City.

C. Standard warranty of manufacturer shall apply for replacement of parts after expiration of the above period. Manufacturer shall furnish replacement parts to the City or his service agency as directed. Furnish to the City Engineer printed manufacturer's warranties complete with material included and expiration dates, upon completion of project.

3.11 OPERATING AND MAINTENANCE DATA

A. Required: Submit to the City Engineer, complete and at one time, prior to acceptance of the installation, 10 copies of manufacturer's instructions for operation and maintenance of electrical equipment, including replacement parts lists. Each set to be bound in an indexed loose leaf ring binder with permanent cover and permanent identification on back.

3.12 RECORD DRAWINGS

A. Required: Conform to the provisions of Subsection 1.06.M of this Section and as noted hereinafter as applicable.

B. Provide and maintain in good order at the field office a complete set of electrical contract prints. All changes to the contract shall be clearly recorded on this set of prints and initialed by the Contractor on a weekly basis. At the end of the project transfer all changes, using same symbols, to one set of Mylar transparencies. Obtain Mylar transparencies from the Architect at Contractor's cost.

C. Accurately indicate and dimension all underground conduit runs and conduit stub-outs and all pullboxes from building walls on all Record Drawings.

D. Upon completion of the work and as a prerequisite to issuance of certificate for final payment, deliver one complete set of final prints of the mylars and the Mylar originals themselves.

E. Initial and identify name and telephone number of installing Contractor on all sheets as being a correct and accurate record of the installation. This also includes, but is not limited to, fire alarm and control systems.

3.13 INSPECTION AND ACCEPTANCE PROCEDURES

A. The City Engineer will submit observation reports periodically during the construction phase detailing Contract deficiencies. The Contractor is responsible for making all corrections immediately to avoid delaying other trades. Final acceptances of the project will not be made until all items have been corrected.

3.14 FINAL ACCEPTANCE OF ELECTRICAL SYSTEMS

A. Prior to Final Acceptance of operating electrical systems Contractor shall do the following, as applicable:

1. Provide materials of the type and quality specified and as necessary for proper operation, tested and ready for use.
2. Deliver to the City Engineer the "as-built" transparency and set of prints as "Record Drawings".
3. Furnish the required operating and maintenance data/manuals.
4. Clean-up of the project pertaining to this Division of the work, as hereinbefore noted in Subsection 3.08 of this Division.
5. After installation has been completed and adjustments made, operate the system for a period of one week, during which time, demonstrate to the City Engineer that all systems are complete and operating in conformance with Contract documents.
6. Conduct all tests required and as specified in Sections of this Division and submit test reports and corrective actions taken.
7. Submission of all warranties and guarantees.

B. Final Acceptance of Electrical Work Shall Be Contingent On The Following:

1. Contractor replacing defective materials and workmanship.
2. Upon completion of work and adjustments made, Contractor shall conduct an operating test for each system for approval at such time as City Engineer directs. Conduct test in presence of authorized representative of the City Engineer demonstrate that systems and equipment do operate in accordance with requirements of the Contract documents and are free from electrical and mechanical defects.
3. Contractor shall provide the necessary training programs and instructions to the City's representative.
4. Submit copies of manufacturer's instructions and maintenance of electrical equipment including replacement parts lists. Each set shall include one set of shop drawings of equipment installed.

3.15 SUBMITTALS FOR CHANGE ORDERS

A. General: When changes are made during the construction phase, deletions and additions shall be presented in a manner that will indicate the cost of each item of material and corresponding labor. Overhead and profit makeup shall be then added in accordance with the requirements of the GENERAL CONDITIONS.

1. Unit costs shall apply in event of changes, additions and deletions to the contract, as follows:
2. Submit with Bid Costs a unit cost, covering one hour of labor, including all applicable supervision, nonproductive labor, burdens, benefits, insurance, taxes, direct and indirect job expenses including drawings, engineering, temporary power, warehouse, tools, equipment, clean-up, bonds, overhead and profit, charged for labor. Unit cost of labor shall be applicable for duration through completion of the project.

3. Material unit costs shall be based on the latest edition of "Electrical Trade Book", published by Trade Service Publications, Inc. Unit cost shall be taken from extreme right-hand column.

4. Labor unit quantities, for specific items required, shall be those listed in the third column from the National Electrical Contractors' Association, Inc., "NECA Manual of Labor Units".

END OF SECTION

SECTION 16100
BASIC MATERIALS AND METHODS

PART 1 - GENERAL

1.01 THE REQUIREMENT

A. The CONTRACTOR shall furnish all tools, equipment, materials, and supplies and shall perform all labor required to complete the work as indicated on the Drawings and specified herein.

B. This section covers the work necessary to furnish and install, complete, the materials specified hereinafter.

1.02 RELATED WORK SPECIFIED ELSEWHERE

A. The WORK of the following Sections and Divisions applies to the WORK of this Section. Other Sections and Divisions, not referenced below, shall apply to the extent required for proper performance of this WORK.

1. Division 02 Site Work.
2. Division 03 Concrete.
3. Division 05 Metals.
4. Division 09 Finishes.
5. Division 11 Equipment.
6. Division 17 Instrumentation and Control.
7. Work Specified Under Other Divisions:
    a. All concrete work required for encasement, installation, or construction of the work specified in the various Sections of Division 16 is included as a part of the work hereunder, and shall be 2500-psi concrete conforming to the applicable requirements of Section 03300, "Cast-in-Place Concrete"; provided, that the following exceptions and supplementary requirements shall apply:
        (1) Consolidation of encasement concrete around duct banks shall be by hand puddling, and/or no mechanical vibration shall be used.
        (2) A workability admixture shall be used in encasement concrete, which shall be a hydroxylated carboxylic acid type in liquid form. Admixtures containing calcium chloride shall not be used.
        (3) Concrete for encasement of conduit or duct banks shall contain an integral red-oxide coloring pigment in the proportion of 8 pounds per cubic yard of concrete.

B. Materials and equipment furnished and installed under other Divisions with raceway and electrical conductors furnished, installer and connected under Division 16 Electrical.

1.03 REFERENCE SPECIFICATIONS, CODES, AND STANDARDS

A. All work specified herein shall conform to or exceed the applicable requirements of the referenced portions of the following publications to the extent that the provisions thereof are not in conflict with other provisions of these specifications.

1. Codes and Standards:

LAEC	City of Los Angeles Electrical Code, latest adopted edition.
California Code of Regulations	Title 8, Industrial Relations Subchapter 5, Electrical Safety Orders.

2. Government Standards:

FS W-C-596H/GEN(1)	Connect, Plug, Receptable and Cable Outlet, Electrical Power.
FS W-S-896/GEN(1)	Switches, Toggle (Toggle and Lode), Flush mounted (ac).
FS WW-C-581E	Conduit, Metal, Rigid, and Intermediate; And Coupling, Elbow, and Nipple, Electrical Conduit: Steel, Zinc Coated.

3. Commercial Standards:

ANSI B16.5	Pipe Flanges and Flanged Fittings, Steel, Nickel Alloy, and Other Special Alloys.
ANSI C80.1	Electrical Rigid Steel Conduit (ERSC), Zinc Coated, specification for.
ANSI Z55.1	Gray Finishes for Industrial Apparatus and Equipment.
ANSI/UL 467	Grounding and Bonding Equipment, Safety Standard For.
NEMA WD-1-1.10	General Requirements for Wiring Devices.
NEMA PB-1	Panelboards.
NEMA AB-1	Molded Case Circuit Breakers.
NEMA KS-1	Enclosed Switches.
NEMA VE-1	Ventilated Cable Tray.
ICEA S-95-658/WC70	Power Cables Rated 2000 Volts or Less.
ICEA S-96-659/WC71	Nonshielded Cables Rated 2,001-5,000 V.
ICEA S-93-639/WC745	46 kV Shielded Power Cable.
ICEA S-61-402	Thermoplastic-Insulated Wire and Cable for the Transmission and Distribution of Electrical Energy.

ICEA S-19	Rubber-Insulated Wire and Cable for the Transmission and Distribution of Electrical Energy.
UL 6	Electrical Rigid Metal Conduit – Steel.
UL 489	Molded Case Circuit Breakers.
UL943	Ground Fault Circuit Interrupters.

B. All equipment furnished by the CONTRACTOR shall be listed by and shall bear the label of Underwriters' Laboratories, Incorporated, (UL) or of an independent testing laboratory acceptable to the CITY's Department of Building and Safety.

C. The construction and installation of all electrical equipment and materials shall comply with all applicable provisions of the Cal/OSHA Safety Orders (Title 8, CCR), State Building Standards, and applicable local codes and regulations.

1.04 CONTRACTOR SUBMITTALS

A. Submittals shall be made in accordance with the requirements of Section 16020 Municipal Facilities General Electrical Requirements.

1.05 QUALITY ASSURANCE

A. Quality assurance shall be in accordance with all applicable requirements of Section 16020 - Municipal Facilities General Electrical Requirements.

PART 2 - PRODUCTS

2.01 SERVICE ENTRANCE

A. Provide labor and furnish equipment as required by the electric utility which will provide service to the facility. All such materials and work shall meet the requirements of the utility company.

B. Provide temporary service for construction tools and testing apparatus during construction. The pump stations will be bypassed during reconstruction of the pump stations and will require temporary service. The existing service may be temporarily tapped at the meter to provide temporary power; however, a temporary external main disconnect will be needed.

2.02 HAZARDOUS AREAS

A. Provide devices, materials, and equipment for installation in hazardous areas that are specifically approved for installation in hazardous areas of the Class, Division, and Group indicated, and are of construction that will ensure safe performance under conditions of proper use and maintenance. All devices, materials, and equipment used shall meet the requirements of the NEC, applicable state and local codes, and the authority enforcing these codes.

B. The wet well, and flow meter vault are classified as Class I Division 1 Group C. The electrical room is unclassified.

C. Intrinsically safe circuits: Intrinsically safe wiring shall be segregated from non-intrinsically safe wiring in raceways, boxes and cabinets, as required by NEC Article 504. Intrinsically safe wiring conductors within a cabinet shall be colored light-blue. This color is solely reserved for intrinsically safe circuits. Identify intrinsically safe circuit terminals as required by NEC Article 504.80.

D. Acceptable Manufacturers:

1. Appleton;
2. Cooper Crouse-Hinds;
3. Thomas & Betts;
4. Or equal.

2.03 OUTLET AND DEVICE BOXES

A. General: Provide boxes not less than 2-inches deep, unless shallower boxes are required by structural conditions and are specifically accepted by the ENGINEER. Do not use box extensions to provide wiring space required by the NEC. For hollow masonry construction, provide boxes of sufficient depth so that conduit knockouts or hubs are in the masonry void space.

B. Sheet Steel (SS) Boxes: Provide zinc- or cadmium-plated boxes of the one-piece drawn type. Install 4-inch minimum octagonal boxes for ceiling outlets, except where smaller boxes are required for the particular fixture being installed. Use concrete type boxes in poured concrete slabs. Provide 2-inch by 4-inch minimum boxes for switches and receptacles. Provide plaster rings where required.

C. Cast Steel (CS) Boxes: Provide boxes of cast ferrous metal with gasketed, watertight, cast ferrous metal covers and stainless steel screws. Provide boxes with threaded conduit hubs and cast mounting lugs where lugs are required. Use Crouse-Hinds or Appleton Type FS or FD boxes, or equal.

D. Cast Aluminum (CA) Boxes: Provide boxes of cast, copper-free aluminum with gasketed, watertight, cast copper-free aluminum covers and stainless steel screws. Provide boxes with threaded conduit hubs and cast mounting lugs where lugs are required. Use Crouse-Hinds or Appleton Type FS or FD boxes, or equal.

E. Nonmetallic (NM) Boxes: Provide fiberglass boxes with gasketed, watertight covers and stainless steel screws. Provide boxes with conduit hubs and any required mounting lugs. UseCrouse-Hinds, Stahlin or equal.

F. Provide a box suitable for the conditions encountered at each outlet in the wiring or raceway system and sized in accordance with the LAEC. Use the listed types unless otherwise indicated or accepted.

Types to be provided, Steel Raceway System:

Locations	Box Type
All	Cast steel
Exterior Locations, with:	
Exposed Raceways	Cast steel 316 Stainless steel(NEMA 4X)
Concealed Raceways	Cast steel 316 Stainless steel(NEMA 4X)
Concrete Encased Raceways	Cast steel 316 Stainless steel(NEMA 4X)
Class I Hazardous Areas	Cast steel, NEMA 7
Class II, or III Hazardous Areas	Cast steel, NEMA 7
Interior Dry Locations, with:	
Exposed Rigid Conduit	Sheet metal Cast steel
Exposed EMT	Sheet steel
Concealed Raceways	Sheet steel
Concrete Encased Raceways	Cast steel
Lighting Circuits, Ceiling Portion	Sheet steel
Class I Hazardous Areas	Cast steel, NEMA 7
Class II, or III Hazardous Areas	Cast steel, NEMA 7
Interior Wet Locations, with:	
Exposed Raceways	Cast steel 316 Stainless steel(NEMA 4X)
Concealed Raceways	Cast steel
Concrete Encased Raceways	Cast steel
Lighting Circuits, Ceiling Portion	Sheet steel
Class I Hazardous Areas	NEMA 7
Class II, or III Hazardous Areas	Cast steel

Types to be Provided, Nonmetallic Raceway System:

Locations	Box Type

All	Nonmetallic
Exposed Raceways	Nonmetallic Cast metal
Concealed Raceways	Nonmetallic Cast metal Sheet steel
Concrete Encased Raceways	Nonmetallic Cast metal

G. Device Plates:

Types to be Provided:

Locations	Plate Type
All Interior	304 SS, Plastic, Metal, Cast metal
Office	Plastic, Metal
WP Designation	Weatherproof in-use
Interior	(Except those designated WP)
Flush Mounted Boxes	Plastic, Metal
Surface Mounted Cast Metal Boxes	Plastic, Metal, Cast metal
Surface Mounted Sheet Metal Boxes	Plastic, Metal, Cast metal

2.04 JUNCTION AND PULL BOXES

A. Utilize NEMA 4X 316 stainless steel or fiberglass UV-rated watertight enclosures for outdoor or wet and corrosive locations. Fiberglass enclosures may be used only with the approval of the ENGINEER.

B. Where outlet boxes are used as junction or pull boxes, use materials as specified under article 2.03, OUTLET AND DEVICE BOXES.

C. Where larger sheet steel boxes are required, utilize boxes of code-gauge, painted galvanized steel with full-access screw covers mounted with corrosion-resistant stainless steel machine screws.

D. Where larger cast metal boxes are required, use neoprene gasketed, watertight boxes with hinged, cast metal full-access covers, stainless steel cover hardware, and drilled and tapped conduit entrances. Use Crouse-Hinds Series W, O.Z./Gedney Series Y boxes, or equal. For below grade conduit, use Crouse-Hinds Type WJBF, O.Z./Gedney Series YR, or equal, minimum size 8-inches by 8-inches by 6-inches. For hazardous areas, use boxes applicable for the location and hazardous atmosphere present.

E. Where larger nonmetallic boxes are required, they shall be gasketed, watertight, corrosive resistant, and have a hinged, full-access screw cover. The hinge and machine screws shall be stainless steel. The box and cover shall be of high impact strength fiberglass-reinforced polyester material with stability to high heat. The boxes shall have conduit hubs and any required mounting lugs. The minimum size shall be 7-inches by 10-inches by 6-1/2-inches deep. Use Crouse-Hinds, or equal, Type NJB boxes.

F. Use concrete boxes of reinforced, precast concrete, 10-inches by 17-inches minimum inside dimensions, Brooks Products, Inc., No. 3-1/2T, Jensen Precast HT1017, or equal. Mark cast iron cover as per CITY standards. Boxes shall be inspected and approved by the CITY prior to site delivery.

G. Use special boxes where indicated on the Drawings.

2.05 TERMINAL JUNCTION BOXES (TJB)

A. Provide hinged-cover terminal junction boxes of the required type and size where indicated. Utilize NEMA 12 enclosures for indoor dry locations. Utilize NEMA 4X 316 stainless steel watertight enclosures, as described under article 2.04, JUNCTION AND PULL BOXES, for outdoor or wet locations. Utilize NEMA-7 enclosure for areas located in Class I, Division II. Provide terminal blocks with a separate connection point for each conductor entering or leaving the box. Provide 25 percent spare terminal points for CITY use following completion of installation. Paint interior surfaces with white enamel or lacquer. Terminals shall be DIN-rail mounted where suitable terminals are available.

2.06 TELEPHONE TERMINAL CABINETS (NOT USED)

2.07 WIRING DEVICES (NOT USED)

2.08 LIGHTING AND POWER DISTRIBUTION PANELBOARDS (NOT USED)

2.09 CIRCUIT BREAKERS, INDIVIDUAL, 600 VOLTS AND LESS

A. Mount individual circuit breakers in NEMA 12, industrial use NEMA 1, general purpose enclosure unless otherwise indicated. Provide NEMA 4X, 316 stainless steel raintight enclosure for circuit breakers mounted outdoors. Provide circuit breakers with handles that can be locked in the OFF position. Interlock enclosure and circuit breaker to prevent opening the cover with the circuit breaker in the ON position. Provide quick-make, quick-break, thermal magnetic circuit breakers of the indicating type showing ON/OFF and TRIPPED positions of the operating handle. Do not use single-pole circuit breakers with handle ties where multi-pole circuit breakers are indicated. Utilize multi-pole circuit breakers designed so that an overload on one pole automatically causes all poles to open. Provide circuit breakers meeting the requirements of UL 489 and having a minimum interrupting rating as indicated of amps RMS symmetrical at 600 volts. Where circuit breakers are used as service entrance equipment, provide units UL labeled for that use. Provide circuit breakers with terminals suitable for use with 75 degrees C wire at full LAEC 75 degrees C ampacity.

B. Circuit breakers used as service entrance equipment, provide units UL labeled for that use. Provide molded case circuit breakers with terminals suitable for use with 75 degrees C wire at full LAEC 75 degrees C ampacity or higher. Provide breakers rated for 250 amps or greater with true RMS sensing electronic trip with the following functions as a minimum:

1. Adjustable long time pickup with delay.
2. Short time pickup and delay.
3. Short-time i^2t.
4. Adjustable high range instantaneous.
5. Adjustable ground fault delay and pickup trips for selective tripping.

Configure the trip relay protection settings as recommended by the Coordination Study report specified in Section 16280 "Short Circuit and Coordination Reports".

Breaker shall be Eaton Series C, with Digitrip 310+ trip device: or equal from General Electric, or Square D.

2.10 FUSED SWITCHES, INDIVIDUAL, 600 VOLTS AND LESS

A. Mount individual fused switches in NEMA 12, industrial use enclosures unless otherwise indicated. Provide NEMA 4X, 316 stainless steel raintight enclosure for fused switches mounted outdoors. Provide fused switches that can be locked in the OFF position. Interlock enclosure and switch to prevent opening the cover with the switch in the ON position. Provide fused switches which are quick-make, quick-break, motor rated, load-break, heavy-duty (HD) type having external marking clearly indicating ON and OFF positions. Provide fuses of the current ratings indicated and types specified herein. Utilize fuse mountings that reject Class H fuses and will accept only the current--limiting fuses specified. Provide fused switches meeting the requirements of NEMA KS 1 and UL listed for application to a system having an available short circuit current as indicated of amps rms symmetrical. Where fused switches are used as service entrance equipment, provide units UL labeled for that use. Provide switches with terminals suitable for use with 75 degrees C wire at full LAEC 75 degrees C ampacity. Provide one Form C auxiliary switch operated with the disconnect switch.

B. Manufacturers:

1. Eaton;
2. Siemens;
3. Square D;
4. Or equal.

2.11 FUSES, 600 VOLTS AND LESS

A. Provide a complete set of current-limiting fuses wherever fuses are indicated. Supply a set of six spare fuses of each type and each current rating installed. Utilize fuses that fit mountings specified with switches and which provide features rejecting Class H fuses. Provide the following types:

1. For motor and transformer circuits, 600 volts and less, 0 to 600 amps, UL Class RK-1 with time delay, Bussmann Type LPS-RK, Mersen/Shawmut Type A6D-R, or equal.
2. For motor and transformer circuits, 250 volts and less, 0 to 600 amps, UL Class RK-1 with time delay, Bussmann Type LPN-RK, Mersen/Shawmut Type A2D-R, or equal.
3. For feeder and service circuits, 600 volts and less, 0 to 600 amps, UL Class RK-1, Bussmann Type KTS-R, Mersen/Shawmut Type A6K-R, or equal.
4. For feeder and service circuits, 250 volts and less, 0 to 600 amps, UL Class RK-1, Bussmann Type KTN-R, Mersen/Shawmut Type A2K-R, or equal.
5. For feeder and service circuits, 600 volts and less, 601 to 6,000 amps, UL Class L, Bussmann Type KRP-C, Mersen/Shawmut Type A4BY, or equal.

2.12 PUSHBUTTONS, INDICATING LIGHTS, AND SELECTOR SWITCHES

A. For non-hazardous, indoor, dry locations, including motor control centers, control panels, and individual stations, provide heavy-duty, oil tight type pushbuttons, LED indicating lights, selector switches, and stations for these devices.

B. For non-hazardous, outdoor, or normally wet locations, or where otherwise indicated, provide heavy-duty corrosion-resistant, watertight type pushbuttons, indicating lights, or selector switches

mounted in NEMA 4X 316 stainless steel watertight enclosures. Provide special gasketing required to make complete station watertight.

C. Provide devices meeting the requirements of NEMA ICS 2, and having individual, extra-large nameplates indicating their specific function. Provide pushbutton stations with laminated plastic nameplates indicating the drive they control. Provide contacts with NEMA designation rating A600. Install provisions for locking pushbuttons and selector switches in the OFF position wherever lockout provisions are indicated.

D. For hazardous locations, enclosures for push buttons, LED indicating lights and selector switches shall be approved for classified areas and shall be in compliance with LAEC Article 500.

E. Utilize selector switches having standard operating levers. Make all LED indicating lights transformer push-to-test LED type. Provide ON or START pushbuttons colored green. Provide OFF or STOP pushbuttons colored red.

F. Manufacturers:

1. Eaton;
2. Siemens;
3. Square D;
4. Or equal.

2.13 TERMINAL BLOCKS 600 VOLTS AND LESS

A. Provide 600-volts terminal blocks for termination of all control circuits entering or leaving equipment, panels, or boxes. Provide screw clamp compression, dead front barrier type terminal blocks with current bar providing direct contact with wire between the compression screw and yoke. Provide yoke, current bar, and clamping screw constructed of high strength and high conductivity metal. Utilize yoke that guides all strands of wire into the terminal. Utilize current bar providing dependable vibration-proof connection. Supply terminals constructed to allow connection of wire without any special preparation other than stripping. Rail mount individual terminals to create a complete assembly and provide terminals constructed such that jumpers can be installed with no loss of space on terminal or rail.

B. Size all terminal block components to allow insertion of all necessary wire sizes and types. Supply terminal blocks with marking system allowing the use of preprinted or field-marked tags. Supply CSA certified and UL approved terminal blocks manufactured by Weidmuller, Ideal, Electrovert, or equal. Provide terminal blocks with 25 percent spare termination points for CITY use following completion of installation.

2.14 CONTROL RELAYS

A. Provide industrial control relays, NEMA Class A300 (300 volts, 10 amps continuous, 7,200VA make,720VA break) or A600 for 600 volts, industrial control type with field convertible contacts, and meeting the requirements of NEMA ICS 2. Provide Cutler-Hammer Type M-300, Square-D Type 8501, or equal. A600 (600 volts, 10 amps continuous, 7,200VA make, 720VA break), industrial control type with field convertible contacts, and meeting the requirements of NEMA ICS 2. Provide Cutler-Hammer Type M-600, Square-D Type 8501, or equal.

B. Where time delay relays are specified or required, unless otherwise noted, provide industrial control relays with a timer attachment adjustable over the range.

C. Where latching (mechanically held) relays or motor thermal detector relays are specified, provide industrial control relays with mechanical latch attachment with unlatching coil and coil clearing contacts. Utilize an attachment allowing easy manual latching and unlatching.

2.15 RESET TIMERS

A. Provide synchronous-motor-driven reset timers with a solenoid-operated clutch and suitable for semi-flush, panel mounting. Utilize timers with time range indicated and 10-amp, 120-volts contacts. Provide Eagle Signal Reset timers, Automatic Timing and Controls Reset timers, or equal.

B. Provide electronic, programmable timers with time span duration.

2.16 ELAPSED TIME METERS

A. Provide synchronous-motor-driven, elapsed time meters, 0 to 99,999.9 hours range, non-reset type, suitable for semi-flush, panel mounting. Provide Type 240, 2-1/2-inch Big Look unit, Eagle Signal Elapsed Time unit, or equal.

B. Totalizer LED: Totalizers (counters) shall be electronic LED type with 7 (minimum) non-resettable digits. Counters shall be approximately 2"h x 2"w x 3"d and shall be suitable for front panel mounting. Character height shall be 0.140 inches minimum. Each electronic counter shall have a standby battery or non-volatile memory capable of maintaining the last totalized value for a minimum of 72 hours after a utility power failure.

2.17 MAGNETIC CONTACTORS

A. Provide contactors of the NEMA sizes indicated. Mount contactors in NEMA 12, dust-tight, drip-tight, industrial use enclosures unless otherwise indicated. Utilize contactors manufactured and rated in accordance with NEMA ICS 2.

B. Manufacturers:

1. Eaton;
2. Siemens;
3. Square D;
4. Or equal.

2.18 MAGNETIC LIGHTING CONTACTORS

A. Provide mechanically held lighting contactors of the current ratings indicated. Mount contactors in NEMA 12, dust-tight, driptight, industrial use enclosures unless otherwise indicated. Provide coil-clearing contacts on mechanically-held units. Utilize contactors manufactured and rated in accordance with NEMA ICS 2.

B. Manufacturers:

1. Eaton;

2. Siemens;

3. Square D;

4. Or equal.

2.19 AUTOMATIC TRANSFER SWITCHES - NOT USED

2.20 CAPACITORS – NOT USED

2.21 DRY TYPE SMALL POWER TRANSFORMERS (600-VOLTS AND LESS PRIMARY)

A. Provide self-cooled, two-winding, dry type transformers of the ratings indicated and built in accordance with the latest IEEE, ANSI, and NEMA standards. Utilize units with manufacturer's standard insulation class and standard temperature rise. For ratings 3 to 25 kVA single-phase and 3 to 15 kVA 3-phase, provide units with core and coils completely enclosed in a non-ventilated, NEMA 4X weatherproof enclosure. Utilize encapsulated windings on single-phase units 0 to 25 kVA. On all transformers 15 kVA and larger provide units with at least four, 2-1/2 percent, full capacity voltage taps; two above and two below normal voltage rating. On units 75 kVA and larger, provide an impedance of 4.5 percent minimum.

B. Supply units where sound levels determined by tests in accordance with NEMA and ANSI standards do not exceed:

1. 40 decibels for 0 to 9 kVA.

2. 45 decibels for 10 to 50 kVA.

C. Acceptable Manufacturers:

1. Eaton;

2. Hammond Power Solutions;

3. Schneider Electric;

4. Or equal.

2.22 DRY TYPE, SHIELDED, ISOLATION TRANSFORMERS (600-VOLTS AND LESS PRIMARY) - NOT USED.

2.23 LOW VOLTAGE SURGE PROTECTIVE EQUIPMENT

A. Provide secondary surge protective equipment consisting of a surge capacitor and surge arrestor combination located where indicated on the Drawings. Utilize components for all surge protective equipment covered by this Specification, designed and tested in accordance with ANSI/IEEE C62.11.

B. Provide a surge capacitor impregnated with non-pcb biodegradable dielectric fluid. Include an integral discharge resistor which will drain the residual voltage to 50 volts crest in less than 5 minutes after the unit has been disconnected from the circuit.

C. Provide an arrestor consisting of an assembly of high strength metal oxide valve elements enclosed in a high strength, corrosion-resistant, molded resin housing.

D. Provide a capacitor and arrestor having a mounting nipple, flat washer, and nut suitable for knockout mounting. Install capacitors and arrestors in NEMA 4X (stainless steel) enclosures.

E. Manufacturers:

1. Eaton;
2. Siemens;
3. Square D;
4. Or equal.

2.24 PENETRATION SEALING SYSTEMS (FIRE STOPS)

A. Penetration sealing system shall meet the requirements of firestop tested up to 2 hours in accordance with ASTM E 814 (UL1479) and of UL Water Leakage Test, W Rating - Class 1 requirement.

B. Provide a 2-hour fire barrier flexible, non-slump silicone-based water tight sealant featuring neutral cure upon exposure to the atmosphere for vertical surfaces. 3M-Fire Barrier Water Tight Sealant 1000 NS, or equal.

C. Provide a 2-hour fire barrier flexible, self-leveling silicone-based water tight sealant featuring neutral cure upon exposure to the atmosphere for horizontal surfaces. 3M-Fire Barrier Water Tight Sealant 1003 SL, or equal.

D. Provide Fire Barrier Packing Material shall be designed as an alternative packing material to mineral wool, fiberglass and backer rod in through penetration firestop systems. Fire Barrier Packing material shall be no asbestos, mold resistant, and inorganic. Material shall meet the performance requirements of ASTM E 814, C 1338 and UL 1479. Fire Barrier Packing Material shall be 3M Fire Barrier Packing Material PM4, or equal.

E. Provide Fire Barrier Sealant where required to seal penetrations or openings forming a gap of 1/2" or less. Fire Barrier Sealant shall be rated minimum 2 hours effective fire and smoke stop and shall meet the requirements of ASTM E 814 and UL 2079. Fire Barrier Sealant shall be 3M Fire Barrier Sealant CP 25WB, or equal.

2.25 ENCLOSURE PAINT AND FINISH

A. All metallic enclosures shall be finished with a prime coat of rust inhibitor and painted as per ANSI No. 61 or as per the ENGINEER's instructions.

PART 3 - EXECUTION

3.01 OUTLET AND DEVICE BOXES

A. Installation:

1. Mount boxes at the following heights unless otherwise required by the Americans with Disabilities Act (heights are to the centerline of the box):

Wall switches	48-inches above floor.
Thermostats	48-inches above floor.
Wall telephone outlets	6-inches above counter tops; 15-inches above floor.

Wall mounted telephone	48-inches above floor outlets for public pay telephone, 48-inches above floor for standard wall telephone.
Office, Lab Receptacles:	Flush device plate bottom or side with top of the splash-back on use areas, halls, etc. or 6-inches above countertops without splash-back; 15-inches above floor unless otherwise indicated.

a. Where above heights do not suit the building construction or finish, locate boxes where directed by the ENGINEER.

b. Locations indicated are approximate. Study the Drawings in relation to spaces and equipment surrounding each outlet. When necessary, with the approval of the ENGINEER, relocate outlets to avoid interference with mechanical equipment or structural features. Locate all light switches on lock side of doors. Locate all light fixture outlets in a symmetrical pattern according to the room layout unless otherwise indicated.

c. Mount all boxes plumb and level. Use flush mounted boxes with concealed conduits. Make edges of boxes flush with finished surface. Provide proper type extension rings or plaster covers for this purpose. For flush mounted boxes, make holes in the surrounding surface no larger than required to receive the box.

d. Install boxes in a secure, substantial manner supported independently of conduit by attachment to the building structure or a structural member. Fasten boxes with bolts and expansion shields on concrete or brick, toggle bolts on hollow masonry units, and machine screws or welded, threaded studs on steelwork. Threaded studs driven in by a powder charge and provided with lock washers and nuts are acceptable in lieu of expansion shields. Boxes embedded in concrete or masonry need not be additionally supported. Utilize galvanized mounting hardware in industrial areas.

e. Provide flush or recessed lighting fixtures with separate junction boxes when required by the fixture terminal temperature. Where boxes support fixtures, provide proper means of attachment with adequate strength.

f. Open no more knockouts in sheet steel boxes than are actually required. Seal any used openings in any type box.

B. Manufacturers:

1. Leviton;
2. Eaton;
3. Hubbell;
4. Or equal.

3.02 JUNCTION AND PULL BOXES

A. Where indicated on the Drawings, and where necessary to terminate, tap-off, or redirect multiple conduit runs, provide and install appropriately designed junction boxes. Furnish and install pull boxes where necessary in the raceway system to facilitate conductor installation. Provide pull boxes to limit conduit runs to less than 150-feet and to contain no more than the equivalent of three right-angle bends unless accepted by the ENGINEER.

1. Types to be Provided:

   a. Use boxes of the types listed for specific locations under article 2.03, OUTLET AND DEVICE BOXES.

   b. Use outlet boxes as junction boxes and pull boxes wherever possible and allowed by applicable codes.

   c. Provide cast concrete boxes for below-grade conduit. Stainless steel (NEMA 4X) for above grade locations.

2. Installation:

   a. Make all boxes accessible. Do not install boxes in finished areas unless accepted by the ENGINEER. Mount all boxes plumb and level. Use flush mounted boxes with concealed conduits. Make edges of boxes flush with the final surface.

   b. Mount boxes in a secure, substantial manner, supported independently of conduit by attachment to the building structure or a structural member. Fasten boxes with bolts and expansion shields on concrete or brick, toggle bolts on hollow masonry units, and machine screws or welded threaded studs on steelwork. Threaded studs driven in by a powder charge and provided with lock washers and nuts are acceptable in lieu of expansion shields. Boxes embedded in concrete or masonry need not be additionally supported. Utilize galvanized mounting hardware in industrial areas.

   c. Install boxes for conduits under grade flush with finished grade in locations outside of paved areas, roadways, or walkways.

   d. adjacent structure is available, the box may be mounted on the structure surface just above finished grade in accessible but unobtrusive location. If it is found desirable to locate boxes in paved areas, roadways, or walkways, obtain ENGINEER's written approval and utilize boxes and covers suitable for the weights to which they may be subjected.

B. Manufacturers:

1. Appleton;
2. Oldcastle;
3. JMT;
4. Or equal.

3.03 TERMINAL JUNCTION BOXES (TJB)

A. Install in accordance with all the requirements detailed under article 3.02, JUNCTION AND PULL BOXES above. Label each block and terminal with a permanently attached, non-destructible tag.

3.04 WIRING DEVICES

A. Switches: Mount switches at the heights indicated under article 3.01, OUTLET AND DEVICE BOXES. Mount switches for switch operation in the vertical position.

B. Receptacles: Mount receptacles at heights indicated under article 3.01, OUTLET AND DEVICE BOXES. Mount receptacles with grounding slot down except where horizontal mounting is indicated, in which case mount with neutral slot down. Ground receptacles to boxes with grounding wire, not by yoke or screw contact. Mount weatherproof receptacles with the hinge for the protective cover above (not at side, or below) the receptacle opening.

1. Special Purpose Receptacles: Locate special purpose receptacles where shown. Install and mount the receptacles in accordance with the manufacturer's instructions and the applicable codes.

C. Multioutlet Surface Raceway System: Locate multioutlet surface raceway systems where shown and install in accordance with the manufacturer's instructions.

D. Telephone Outlets: Mount outlets at the heights indicated under article 3.01, OUTLET AND DEVICE BOXES. Mount outlets in the vertical position unless otherwise indicated.

E. Device Plates:

1. Installation: Securely fasten device plates to switch or receptacle boxes or the wiring device contained therein. Install device plates used with flush mounted boxes with all four edges in continuous contact with the finished wall surfaces without the use of mats or similar materials. Plaster fillings will not be acceptable. Install device plates vertically or horizontally with an alignment tolerance of 1/16-inch. Do not use sectional type device plates.

3.05 LIGHTING AND DISTRIBUTION PANELBOARDS

A. Mount panelboards securely where indicated, plumb, in-line, and square with walls. Unless otherwise indicated, mount panelboard with top of its cabinet approximately 6-feet above the floor. Provide a typewritten circuit directory under a metal-framed transparent plastic cover inside each panelboard. Provide an engraved, laminated plastic nameplate on the outside of the panelboard showing the panelboard designation, voltage, and phases.

3.06 DRY TYPE TRANSFORMERS (600-VOLTS AND LESS PRIMARY)

A. Mount transformers approximately where indicated. Load any vibration isolators external to the unit properly and provide complete isolation with no direct transformer unit metal in contact with the mounting surface. Connect electrical circuits to transformers by means of moisture proof, flexible conduit in a manner that prevents transformer vibrations from being transmitted to the building or other equipment.

B. Ground neutrals and enclosures of all transformers and all moisture proof flexible conduit in accordance with applicable codes and as otherwise may be indicated. Connect voltage taps on all transformers to give as close as possible to rated output voltage under normal plant load conditions.

3.07 DRY TYPE, SHIELDED, ISOLATION TRANSFORMERS (600-VOLTS AND LESS PRIMARY)

A. Follow instructions for 3.06, DRY TYPE TRANSFORMERS (600-VOLTS AND LESS PRIMARY) above. In addition, ground isolation shields to the unit enclosure with a conductor of the same material, and at least as big, as the shield ground lead provided with the unit.

3.08 FUSED AND NONFUSED DISCONNECT SWITCHES

Where foreign control voltage is brought into equipment from the PLC or other source, route the foreign voltage source thru the auxiliary Form C contacts so that the equipment is completely de-energized when the disconnect switch is opened.

END OF SECTION

SECTION 16110
CONDUITS AND RACEWAYS

PART 1 - GENERAL

1.01 SCOPE

A. Furnish and install conduits and raceways as indicated on the Contract Drawings and herein specified.

B. Comply with the General Conditions, General Requirements and requirements of Section 16020 Municipal Facilities General Electrical Requirements of this Division 16 concerning definitions, guarantees, submittals, as-builts, etc. as applicable to work of this Section.

C. Rehabilitate existing conduit to be reused by removing any existing conductors, apply full length brush and mandrel train, lubricating the conduit and installing pull lines.

1.02 THE REQUIREMENT

A. The CONTRACTOR shall furnish all tools, equipment, materials, and supplies and shall perform all labor required to complete the work as indicated on the Drawings and specified herein.

1.03 RELATED WORK SPECIFIED ELSEWHERE

A. The following Divisions and Sections apply to the WORK of this Section. Other Sections of the Specifications, not referenced below, shall also apply to the extent required for proper performance of this WORK.

1. Division 02 Site Work.
2. Division 03 Concrete.
3. Division 09 Finishes.
4. Division 11 Equipment.
5. Division 15 Mechanical.
6. Division 17 Instrumentation and Control.

B. Materials and equipment furnished and installed under Divisions, Contracts, Divisions or Contracts with raceway and electrical conductors furnished, installed, and connected under Division 16, Electrical.

1.04 REFERENCE CODES AND STANDARDS

A. All work specified herein shall conform to or exceed the applicable requirements of the referenced portions of the following publications to the extent that the provisions thereof are not in conflict with other provisions of these specifications.

B. Comply with the current provisions of the following Codes and Standards.

1. Codes and Standards:

LAEC	City of Los Angeles Electrical Code, latest adopted edition.

California Code of Regulations	Title 8, Industrial Relations, Subchapter 5, Electrical Safety Orders.

2. Commercial Standards:

ANSI C80.1	Electrical Rigid Steel Conduit (ERSC).
ANSI/NEMA FB 1	Fittings, Cast Metal Boxes, and Conduit Bodies for Conduit.
ANSI/UL 467	Grounding and Bonding Equipment, Safety Standard For.
NEMA TC 2	Electrical Polyvinyl Chloride (PVC) Conduit.
NEMA TC 3	Polyvinyl Chloride (PVC) Fittings.
NEMA VE-1	Metal Cable Tray Systems.
UL 6	Electrical Rigid Metal Conduit - Steel.

C. All equipment furnished by the CONTRACTOR shall be listed by and shall bear the label of Underwriters' Laboratories, Incorporated (UL), or of an independent testing laboratory acceptable to the Building and Safety Department of the City of Los Angeles.

D. The construction and installation of all electrical equipment and materials shall comply with all provisions of the CAL OSHA Safety orders Title 8 CCR, as applicable, State Building Standards, and applicable local codes and regulations.

1.05 CONTRACTOR SUBMITTALS

A. The following submittals and specific information shall be provided.

1. Shop Drawings: Layout drawings of exposed raceways in public spaces. These will be reviewed by the Architect for aesthetics only.
2. Catalog cuts, bulletins, or brochures shall be submitted for mass produced non-custom material.
3. The CONTRACTOR shall furnish copies of the manufacturer's certified test reports for the material being supplied to establish compliance with NEMA RN-1, and to provide a list of materials with product data.

1.06 QUALITY ASSURANCE

A. Listing and Labeling: Provide raceways and boxes specified in this Section that are listed and labeled.

1. The Terms "Listed" and "Labeled": As defined in NFPA 70, Article 100.
2. Listing and Labeling Agency Qualifications: A "Nationally Recognized Testing Laboratory" as defined in OSHA Regulation 1910.7.

B. Comply with NECA's "Standard of Installation."

C. Comply with NFPA 70.

1.07 COORDINATION

A. Coordinate layout and installation of raceways and boxes with other construction elements to ensure adequate headroom, working clearance, and access.

PART 2 - PRODUCTS

2.01 RIGID GALVANIZED STEEL CONDUITS AND RACEWAYS

A. Conduit Material: Rigid Galvanized Steel, and PVC-coated rigid conduit where outdoors and in in wet, damp or corrosive atmosphere (valve vault and wet well).

B. All Conduit Shall Be Metallic Unless Otherwise Indicated or Noted: Metallic conduit incorporated in the work shall comply with applicable divisions of the National and American Standards Association publications.

1. Rigid Steel Conduit: full weight pipe, galvanized, threaded.
2. Intermediate Metal Conduit (IMC): Not used.
3. Aluminum Conduit: Not allowed – no exceptions.
4. Electro-Metallic Tubing (EMT): Not used.
5. Flexible Metal Conduit: Continuous single strip, galvanized steel with 40 mil PVC jacket.
6. Polyvinyl Chloride Jacketed Conduit (PVC): Provide only where noted:
    a. Self-extinguishing, NEMA TC-2, for 90 deg C rated cable and NEMA TC-6 for communication wiring only shall be flame retardant and not support combustion.
    b. Concrete encased and direct burial: Schedule 40.
    c. Buried locations subject to heavy vehicular traffic: Schedule 80.
    d. Elbows/Risers: PVC coated galvanized rigid steel for direct burial.

C. Wireways: Complete with all fittings and accessories. Size as noted, baked enamel finish inside and outside, approved for support at minimum 10 feet on centers.

1. Interior Use: Hinged cover and base, minimum thickness 16 gauge galvanized steel.
2. Exterior Use: Hinged cover and base, minimum No. 14 gauge galvanized steel, weatherproof and gasketed.
3. Provide hinged-cover, screw-cover, indoor, outdoor raintight, baked enamel, steel-enclosed wireway and auxiliary gutter where indicated. Utilize wireways and fittings that are UL listed and have a cover that can easily be removed.
4. Acceptable Manufacturers:
    a. Eaton;
    b. Hoffman;
    c. Legrand;
    d. Or equal.

D. Surface Metal Raceways: Complete with all fittings and accessories. Size as noted, baked enamel finish inside and out:

1. Snap-on covers, minimum No. 20 gauge galvanized steel.
2. Wiremold Co., Walker Parkersburg Textron, Power-Strut or equal.

E. Sleeves:

1. Exterior Non-Membrane Waterproofed Walls or Interior Load Bearing Walls: Galvanized cast iron, galvanized steel or wrought iron with continuously welded center flange.
2. Exterior Non-Membrane Waterproof Roofs: Galvanized cast iron, flashing flange and clamping ring. Josam 26440 Series or equal.
3. Exterior Membrane Waterproof Walls, Floors and Roofs: Galvanized cast iron, flashing flange and clamping ring, equal to Josam 26400 Series or O.Z. type WSK or FSK.
4. Interior Membrane Waterproof Floors: Galvanized cast iron, flashing flange and clamping ring. Extend two inches above floor with pipe nipples. Clamp to flashing. Josam 26420 Series or O.Z. type WSL or FSK or equal.
5. Extend flashing 10 inches around edge of raceway. Flashing subject to review.

F. Seals:

1. Raceways in Waterproof Sleeves: O.Z. Type WSK through wall seal.
2. Raceways in Non-Watertight Sleeves: Sealing compound.
3. Thruwall Cable Seals: O.Z. Type WSCS.
4. Hazardous Areas, Cold Rooms Conductor Water Stops: Equal to Crouse-Hinds or Appleton type EYS, ESU, EYM, EYOM or SFM with matching sealing cement and fiber filler.

G. Expansion fittings:

1. Exposed and In Furred Spaces: Flexible conduit with external bonding jumper strip.
2. In Slab: O.Z. Type AX or Appleton type XJ or XJF with ground continuity.

H. Cables in Raceways Through Sleeves: O.Z. type KSC compound or type C series terminators.

I. Fire Sealants -UL Listed: Chase Foam, CTC PR-855 or equal fire-resistant foam sealant.

J. Use rigid steel conduit, including bushings, couplings, elbows, nipples, and other fittings, galvanized by hot-dipping, and meeting the requirements of ANSI C80.1, ANSI/NEMA FB 1, UL, and the LAEC. Do not use setscrew type couplings, bushings, bends, nipples, and other fittings, unless approved by the ENGINEER or the INSPECTOR. Factory bends are not permitted unless approved by the ENGINEER or the INSPECTOR. Conduit bending radius shall not be less than the minimum cable bending radius of the cable to be installed. See NEC Section 300.34 for conductor bending radius.

2.02 PVC SCHEDULE 40 CONDUIT

A. Use rigid PVC Schedule 40 conduit, UL listed for concrete-encased, underground direct burial, concealed and direct sunlight exposed use, and UL listed and marked for use with conductors having 90 degrees C insulation. Use conduits, couplings, bushings, elbows, nipples, and other fittings meeting the requirements of NEMA TC 2 and TC 3, UL, NEC, and ASTM specified tests

for the intended use. Use only conduit with a factory formed bell on one end. Conduit that requires the use of couplings for straight runs will not be acceptable.

B. Manufacturers:

1. IPEX;
2. Cantex;
3. Prime conduit;
4. Or equal.

2.03 PVC SCHEDULE 80 CONDUIT - NOT USED

2.04 PVC COATED RIGID GALVANIZED STEEL CONDUIT

A. Use PVC coated rigid steel conduit, galvanized inside and out. Prior to coating, the galvanized conduits and fittings shall be UL listed. The galvanized conduit shall have an exterior PVC coating of 40 mils nominal (+10 mils/-5 mils) bonded to the metal. The interior shall be coated with a urethane coating no more than 7 mils thick. Use PVC coated fittings with the same interior and exterior coating requirements. PVC coated fittings and sleeves shall be completely watertight to prevent moisture from penetrating the interior of the conduits and fittings. The PVC coating shall be resistant to ultra-violet rays when installed outdoors. The conduit and fittings shall meet all the requirements of NEMA RN-1.

B. Manufacturers:

1. Plasti-Bond;
2. Allied Tube & Conduit;
3. Permacote;
4. Or equal.

2.05 FLEXIBLE METAL CONDUIT, LIQUID-TIGHT

A. Use UL listed liquid-tight flexible metal conduit consisting of galvanized steel flexible conduit covered with an extruded PVC jacket and terminated with nylon bushings or bushings with steel or malleable iron body and insulated throat and sealing O-ring. Provide external grounding connector and appropriately sized grounding conductor to assure ground continuity.

B. Manufacturers:

1. T&B Liquidtight systems;
2. Atkore;
3. Liquatite;
4. Or equal.

2.06 RACEWAY FITTINGS

A. Fittings for Rigid Steel.

1. Use insulated throat bushings of metal with integral plastic bushings rated for 105 degrees C.

2. For insulated throat bushings for rigid steel conduit, use Thomas & Betts Nylon Insulated Metallic Bushings, or O.Z. Gedney Type B, or equal.

3. Use Myers Scru-Tite, or equal hubs for rigid steel conduit.

4. Use conduit bodies for rigid steel conduit of metal and sized as required by the NEC. Use Appleton Form 35 threaded Unilets; Crouse-Hinds Mark 9 or Form 7 threaded condulets; Killark Series O Electrolets; or equal, for normal conduit bodies for rigid steel conduit. Where conduit bodies for rigid steel conduit are required to be approved for hazardous (classified) locations, use conduit bodies manufactured by Appleton, Crouse-Hinds, Killark, or equal.

5. Use only couplings for rigid steel conduit supplied by the conduit manufacturer.

6. Use Appleton Type EYF, EYM, or ESU; Crouse-Hinds Type EYS or EZS; Killark Type EY or EYS; or equal, 40% fill sealing fittings for rigid steel conduit. Where condensate may collect on top of a seal, provide a drain by using Appleton Type SF Crouse-Hinds Type EYD or EZD, or equal Drain Seal.

7. Use Appleton Type ECDB, Crouse-Hinds ECD, or equal drain fittings for rigid steel conduit.

8. Fittings for Liquid-Tight Flexible Metal Conduit: Use insulated throat connectors for liquid-tight flexible metal conduit of metal with an integral plastic bushing rated for 105 degrees C, and of the long design type extending outside of the box or other device at least 2-inches. Use Thomas & Betts Super-Tite Nylon Insulated Connectors or equal.

9. Fittings in Hazardous Areas: In hazardous areas, use only fittings approved for the atmosphere involved.

10. Use cable sealing fittings forming a watertight nonslip connection to pass cords and cables into conduit. Size cable sealing fitting for the conductor OD. For conductors with OD's of 1/2-inch or less, provide a neoprene bushing where the conductor enters the connector. Use Crouse-Hinds CGBS, Appleton CG Series, or equal, cable 40% fill sealing fittings.

11. Coating thickness of PVC coated fittings shall be the same as that for PVC coated conduits.

B. Rigid Steel and Intermediate Metal Conduits: Non-split, threaded, steel or malleable iron. Zinc die cast not permitted.

C. Electro-Metallic Tubing: Set screw type except waterproof compression type in concrete and for outdoor installation. Zinc die cast fittings of any type are not permitted-no exceptions.

D. Flexible Metallic Conduit: Angle wedge type with insulated throat.

E. Bushings: Metallic insulated type.

F. Weatherproof or Dust-tight Installations: Liquid-tight with sealing ring and insulated throat.

G. Hazardous Locations: Cast, copper-free aluminum, threaded covers.

H. Provide raceways complete with boxes, fittings, and accessories.

2.07 BOXES

A. Outlet Boxes, except as otherwise required by construction, devices, or wiring, as follows:

1. Stamped or Welded Steel, 4-Inches, Square or Octagon for Lighting Fixtures: 1-1/2 inch deep above ceiling, 3 inch deep in slab, and 2-1.8 inch deep in wall.
2. In Wall for Receptacles and Switches: 4 inches square or octagon by 1-1/2 inch deep with raised covers and fixture studs where required. Through-the-wall type not permitted.
3. In Wall for Telephone or Data: 5-inches square or octagon by 2-1/8 inch deep with raised covers and fixture studs where required. Through-the-wall type not permitted.
4. Galvanized Cast-Iron or Aluminum with Threaded Hubs: 4 inch round, 2-inch deep on ceiling, and 4-inch square, 2-inch deep on wall.
5. Boxes For Outdoors and Damp Locations: Weatherproof, cast metal.
6. In Hazardous Locations: Cast, copper-free aluminum.
7. Boxes Without Fixture or Device: Provide with blank cover.
8. Offset back-to-back outlets with minimum six-inch separation except in "Acoustic partitions" where back-to-back outlets are not allowed. Refer to detail 5, architectural drawing sheet.
9. Boxes in "Acoustic Partitions" shall be provided as detailed on architectural drawing sheet.
10. Manufacturers:
    a. Allied Moulded Products;
    b. Steel City;
    c. RACO;
    d. Or equal.

B. Junction and Pull Boxes:

1. Galvanized Sheet Steel: Code size and gauge in accordance with voltage parameters.
2. Covers: Screw-on, except as noted.
3. With insulated supports for cables.
4. Locations: As indicated, where required and accessible.
5. Outdoors and Damp Locations: Galvanized cast iron or aluminum with threaded hubs and gaskets.
6. Provide barriers or separate boxes between wiring energized from different systems, and emergency and normal wiring.
7. Manufacturers:
    a. Hammond Manufacturing;
    b. RACO;
    c. Steel City;
    d. Or equal.

C. Manholes for Serving Agency: Not used.

D. Manholes and Handholes:

1. Precast concrete.
2. Reinforcement for H-20 bridge loading.
3. Water stopped joints.
4. Cast-iron rings and covers, except as noted on schedule.
5. Covers shall be permanently identified as to the name of the Project or City Facility.
6. Inside dimensions as required by NEC 370 size by the Contractor.
7. Complete with inserts, galvanized cable racks, insulated galvanized ladders, dry sumps, galvanized pulling irons, grounding, etc. necessary for complete and operational system.
8. Conduit entry as scheduled.
9. Install per manufacturer's instructions.
10. Manufactured by: Oldcastle Infrastructure, Jensen Precast, ParkUSA, or equal.

E. Floor Boxes: Unless otherwise noted, galvanized cast iron with stainless steel covers and flanges, suitable for conduit and devices indicated. Walker box 880 Series or equal.

1. See also Section 16180 Wiring Devices for special outlet boxes.
2. For additions to existing areas, match existing.
3. Zinc die cast boxes are not permitted.
4. Manufacturers:
    a. Legrand Wiremold;
    b. RACO;
    c. Carlon;
    d. Or equal.

2.08 CABLE TRAY - NOT USED

2.09 PRECAST MAINTENANCE HOLES AND HANDHOLES

A. Install maintenance holes and handholes where required for exterior ductbanks installations, precast with 28-day, 3,000 psi minimum compressive strength concrete and designed for AASHTO H-20 loading. Minimum dimensions for maintenance holes and handholes are shown on the Drawings. Increase these as required by use of extension sections to accommodate the several raceway entrances at their required elevations.

B. Slope conduits toward drain points, handholes, etc., leaving no pockets or other nondraining areas.

C. Provide raceway entrances on 3 sides. For raceways installed under this Contract, knockout panels or precast individual raceway openings may be used. On sides where no raceways are installed under this Contract, provide knockout panels for future raceway installation.

D. Utilize heavy-duty type frames and covers made of cast iron, as per CITY of Los Angeles standards, suitable for H-20 loading, and having machined bearing surfaces. Provide indented.

E. Utilize heavy-duty type frames and covers made of cast iron, as per CITY of Los Angeles standards, suitable for H-20 loading, and having machined bearing surfaces. Provide indented type covers, solid top design, with two drop handles each. On the upper side of each cover, cast or burned by welder, in integral letters not less than 2-inches high appropriate titles, ELECTRIC HV (for above 600 volts), ELECTRIC LV (for 600 volts and below), or TELEPHONE. Field stamp covers with manhole or handhole numbers indicated on the Drawings.

F. Provide a pulling iron embedded in the concrete wall opposite each raceway entrance and one in the floor vertically below the center of the manhole or handhole cover. Utilize 3/4-inch round stock securely fastened to the overall steel reinforcement before concrete is poured.

G. Utilize maintenance hole and handhole hardware of steel, hot-dip galvanized after fabrication.

H. Acceptable Manufacturers:

1. Brooks Products;
2. Jensen Precast;
3. Oldcastle Precast;
4. Or equal.

I. All prefabricated maintenance holes shall be shop inspected before delivery to the site.

2.10 RACEWAY TAGS

A. Provide permanent, stainless-steel markers with raceway designations, minimum 1/4-inch high lettering, pressure stamped, embossed, or engraved onto the tag. Tags relying on adhesives or taped-on markers are not acceptable. Attach tags to raceways with stainless steel wire.

2.11 WARNING TAPE

A. Provide heavy-gauge, yellow plastic tape of 3 -inch minimum width for use in trenches containing electric circuits. Utilize tape made of material resistant to corrosive soil. Use tape with printed warning that an electric circuit is located below the tape.

B. Acceptable Manufacturers:

1. Brady;
2. Marking Services Inc.;
3. Seton;
4. Or equal.

PART 3 - EXECUTION

3.01 GENERAL

A. Provide raceway systems meeting or exceeding the requirements of the NEC.

3.02 PROTECTION DURING CONSTRUCTION

A. In addition to the provisions of the GENERAL REQUIREMENTS, prior to installation, store all products specified in this section in a dry location. Following installation, protect products from the effects of moisture, corrosion, and physical damage during construction. Keep openings in conduit and tubing capped with manufactured seals during construction.

3.03 MINIMUM RACEWAY SIZE

A. Use no circular raceway less than 3/4-inch.

3.04 REQUIRED RACEWAY TYPE FOR LOCATION AND INSTALLATION METHOD

A. Exterior, Exposed:

1. PVC coated rigid galvanized steel conduit.

B. Interior, Exposed:

1. Rigid galvanized steel conduit.

C. Embedded in Concrete Walls or Floors:

1. PVC Schedule 40 conduit.

D. Underground, Direct Earth Burial: not used.

E. Concrete Encased Raceways:

1. PVC Schedule 40 conduit.

F. Under Concrete Floor Slabs: not used.

G. Final Connection to Certain Equipment:

1. Make final connection to motors, wall or ceiling mounted fans and unit heaters, dry type transformers, valves, local instrumentation, and other equipment where flexible connection is required to minimize vibration or where required to facilitate removal or adjustment of equipment, with 36-inch maximum length liquid-tight, PVC-jacketed, flexible steel conduit.

2. The flexible conduit shall be long enough to allow the item to which it is connected to be withdrawn or moved off its base. Use liquid-tight flexible metal conduit in outside areas, process areas exposed to moisture, and areas required to be oil free and dust-tight.

H. Special Locations:

1. Use PVC coated rigid galvanized steel conduit:

a. Where conduit changes from underground and/or concrete embedded to exposed.

I. Communication and Instrumentation Conduits:

1. Communication and instrumentation conduits shall be PVC coated rigid galvanized steel.

3.05 INSTALLATION OF CONDUITS AND RACEWAYS

A. Procedure:

1. All conduit joints shall be cut square, threaded, reamed smooth and drawn up tight. Bends or offsets shall be made with standard conduit ells, field bends made with an approved bender or hickey, or hub-type conduit fittings. Number of bends per run shall conform to Code limitations.

2. Paint male threads of field threaded conduit with homogenized blend of colloidal copper and rust and corrosion inhibitor pipe compound, Thomas and Betts Kopr-Shield or equal. Butt conduit ends.

3. Conduits shall be secured to all boxes with locknuts and bushings in such manner that each system shall be electrically continuous throughout.

4. Conduits shall be securely fastened in place on maximum 4 foot intervals; and within 12" of every outlet box, hangers, supports, or fastenings shall be provided at each elbow and at end of each straight run terminating at a box or cabinet.

5. Furnish and install pullboxes where required by Code and where necessary in the raceway system to facilitate conductor installation. In general, conduit runs of more than 100 ft., or with more than three right-angle bends, shall have a pullbox installed at a convenient intermediate location. Support boxes independently of raceways, walls and partitions. Boxes shall have removable screw covers and shall be accessible

6. Where existing conduit to be reused has seals, proceed as follows:

   a. Attempt to remove the sealant by removing the conductors. Some residue from the sealant is acceptable.

   b. Where the sealant is not removed with the conductors, attempt to rod out the remaining sealant. Minor damage to the conduit at the sealant port is acceptable.

   c. Cut and unscrew exposed conduit; install an electrical union and a length of conduit to complete the conduit run.

3.06 COORDINATION

A. Coordinate layout and installation of raceways and boxes with other construction elements to ensure adequate headroom, working clearance, and access.

B. Raceways shall be run concealed, except as noted.

C. Raceways shall not be buried in waffle floors.

D. Supports Shall Be As Follows:

1. Ceiling trapeze, strap hangers, or wall brackets.

2. U-bolt or pipe straps at each grating level of riser raceways.

3. Raceways shall be secured to support with pipe straps or U-bolts.

4. Spacing shall be a maximum 10 foot on centers for metallic conduit and wireways.

5. Supports Shall Be Mounted To Structure With:

   a. Toggle bolts on hollow masonry.

   b. Expansion shields or inserts on concrete and brick.

c. Machine screws on metal.

d. Wood screws on wood.

e. Nails, rawl plugs or wood plugs shall not be permitted.

E. Exposed raceways and raceways in hung ceilings shall be run parallel with or at right angles to walls.

F. Clearance From Water, Steam or Other Piping: Minimum three inches separation from hot water pipes, except one inch from pipe cover at crossings.

G. Keep raceways clear of motor foundations and underside of boilers.

H. Raceways for hung ceiling shall be run in hung ceilings.

I. Run raceways in walls vertically.

J. Maintain grounding continuity of interrupted metallic raceways with ground conductor, and in flexible conduit for feeders and motor terminal connections.

1. Include equipment grounding conductor in exposed, damp or wet locations.

K. Empty Raceways Over 10-feet Long: Provide with fish or pull wire, galvanized steel or nylon rope.

L. Raceways Located Underground, Beyond Building:

1. Minimum 24-inches top cover, 30-inches in areas subject to heavy vehicular traffic.

2. Slope away from building.

3. Building entry and preceding manhole:

a. Plug empty raceways.

b. Seal cables in raceways with terminators: Similar to O.Z. type CRC Series.

4. Manhole Entries: Through end bells perpendicular to entering wall.

5. Anchor raceways to prevent movement.

6. After Installation: Pass stiff bristle, mandrel (85 percent of raceway diameter) and plug.

7. Placement: Over well-tamped trench bottom and on concrete blocks, five feet on centers. Provide non-metallic spacers.

8. Joints: Minimum six inches apart and staggered.

9. Provide watertight joints.

M. Raceways Located Underground, Under Building:

1. Use PVC coated galvanized steel conduit for bends.

2. Transition from PVC to steel must occur underground.

3. Separate pullboxes/handholes for normal and emergency circuits.

4. Concrete encasement to be continuous with floor.

N. Fire Sealants:

1. Fire-rated approved type sealant equivalent to the rating of the barrier being penetrated.

2. Provided for raceways and wire passing through slots, sleeves or openings in fire partitioned areas. Add fire barriers tight to conductors from Transformer Vault.

3. Seal all unused penetrations.

O. Cable Fireproofing: Fireproof exposed 600v class cables exposed in manholes.

P. Vibration and Noise Control:

1. Provide flexible conduit connections to all vibrating equipment.

2. See Section 16020 Municipal Facilities General Electrical Requirements.

3. Provide expansion fittings and flexible connections across all joints or floated floors.

Q. Rigid Steel Conduit:

1. In slabs (see 3.01.C), maximum outside diameter not to exceed 1/3 of the slab thickness.

2. Direct Buried Conduit: Provide 40 mil PVC coated conduit.

3. Under Building: Concrete encase.

4. Not permitted in terrazzo floor finish.

5. Minimum one-inch cover in concrete fill.

R. Intermediate Metal Conduit: NOT USED.

1. Same as Rigid Steel and:

a. Do not use in hazardous locations or direct burial.

b. Do not use for cables installed by Utility Company.

S. EMT (Electro-Metallic Tubing): NOT USED.

1. Install generally for interior.

2. Not permitted under raised floors.

3. Permitted in slabs (see 3. 1.C) provided:

a. Maximum outside diameter not greater than 1/3 slab thickness.

b. Located in center third.

c. Provide with equipment grounding conductor, adjust conduit size as required.

d. Use only compression fittings and couplings.

e. There is an accessible ceiling below.

T. Flexible Metallic Conduit:

1. For short motor or vibrating equipment connections where rigid conduit is impracticable.

2. From Outlet Box to Recessed Lighting Fixture: Minimum four feet, maximum six-foot length.

3. For Final Connection to Motor Terminal Box, Transformers and Other Vibrating Equipment: With polyvinyl sheathing and ground conductor. Minimum length: 18 inches with minimum 50 percent slack. Connect ground conductor to enclosure or raceway at each end.

4. For expansion joint crossings, cross at right angles and anchor ends.

5. Provide liquid tight flexible conduit with separate insulated stranded copper equipment ground conductor for connections in area exposed to weather, damp locations and connections to transformers enclosures regardless of location. Use for all connections to kitchen and other appliances.

U. Plastic Conduit: (PVC)

1. Permitted Use: Only in "site" or below floor slab.

2. Cut ends square, ream smooth, wipe clean apply approved solvent weld cement and quarter turn as drawing up tight to shoulder. Seal joints watertight.

3. Convert to steel conduit through adaptors when entering building and for risers.

4. Clearance from hot water and steam lines: Three feet minimum.

5. Provide ground wire with power wiring and increase size if required.

6. Under roads, roadways, parking areas, and outside the walls of the building: concrete encase underground.

7. General Interior Use: Not permitted.

V. Outlet Boxes:

1. Set square and true with building finish and secure to building structure by adjustable strap irons.

2. Verify outlet locations in finished spaces with Drawings of interior details and finishes.

3. Provide barriers between switches connected to different phases for voltages exceeding 150 volts to ground.

4. Outlet boxes in "acoustic partitions" shall be as detailed on Architectural Drawing Sheet.

W. Panel, Junction and Pull Boxes:

1. Location: Clear of other work. Conceal junction and pull boxes in finished spaces and maintain accessibility.

2. Support from building structure, independent of conduit. Provide floor to ceiling channels for mounting drywall and lightweight construction.

3. Outlet boxes for fixtures recessed in hung ceiling: accessible through opening created by removal of fixture. Secure to black iron ceiling support.

4. Motor Terminal Boxes: Coordinate with motor branch circuit conduit and wiring.

5. Paint Life Safety system outlet, pull and junction boxes red color.

3.07 EXISTING CONDUIT TO BE REUSED

A. Where new conductors are to be installed:

1. Remove existing conductors without damaging fittings or enclosures.

2. Extend conduit to desired location. Junction boxes, pull boxes or conduit fittings may be used to facilitate extension.

3. Clean conduit using wire brush pulled full length of the conduit. Mandrel the conduit using a mandrel that is ¼" smaller than the conduit inner diameter. Consult the ENGINEER if the mandrel will not fully pass the entire length of the conduit.

4. Lubricate the conduit using an approved lubricating agent.

5. Install a pull line and cap the ends if needed to prevent contamination.

3.08 GENERAL INSTALLATION REQUIREMENTS FOR RACEWAYS

A. Location, Routing, and Grouping:

1. Conceal or expose raceways as indicated. Group raceways in same area together.

2. Run exposed raceways parallel or perpendicular to walls, structural members, or intersections of vertical planes to provide a neat appearance. Follow surface contours as much as possible.

3. Avoid obstruction of passageways. Run concealed raceways with a minimum of bends in the shortest practical distance considering the building construction and other systems.

4. In block walls, do not run raceways in the same horizontal course with reinforcing steel.

5. In outdoor, underground, or wet locations, use watertight couplings and connections in raceways. Install and equip boxes and fittings so as to prevent water from entering the raceway.

6. Paint all threads of galvanized conduits with UL approved zinc-rich paint or liquid galvanizing compound before assembling. Touch up after assembly to cover nicks or scars.

7. Do not notch or penetrate structural members for passage of raceways except with prior approval of the ENGINEER or the INSPECTOR.

8. Do not run raceways in equipment base foundations.

9. Locate above ground raceways concealed in poured concrete so that the minimum concrete covering is not less than 1-1/2-inches.

10. Except at raceway crossings, separate raceways in slabs not less than six times the raceway outside diameter.

11. Raceways installed under slab floors shall lie completely under the slab with no part of the horizontal run of the raceway embedded within the slab.

12. Install concealed, embedded, and buried raceways so that they emerge at right angles to the surface. Provide support during pouring of concrete to ensure that raceways remain in position.

13. Allow a minimum headroom of 7 feet for conduit passing over walkways.

14. Communication and instrumentation conduits crossing power circuits shall be separated from such circuits by the minimum distance stipulated by the IEEE standards.

B. Support:

1. Support raceways at intervals not exceeding LAEC requirements unless otherwise indicated. Support multiple raceways adjacent to each other by ceiling trapeze. Support individual raceways by wall brackets, strap hangers, or ceiling trapeze, fastened by toggle bolts on hollow masonry units, expansion shields on concrete or brick, and machine screws or welded thread studs on steelwork.

2. Threaded studs driven in by a powder charge shall not be accepted.

3. Support all raceways from building structural members only.

4. Do not use nails anywhere or wooden plugs inserted in concrete or masonry as a base for raceway or box fastenings. Do not weld raceways or pipe straps to steel structures. Do not use wire in lieu of straps or hangers.

C. Bends:

1. Make changes in direction of runs with symmetrical bends. Make bends and offsets of the longest practical radius. Do not heat metal raceways to facilitate bending.

2. Make bends in parallel or banked runs of raceways from the same center or centerline so that bends are parallel and of neat appearance. Make field bends in parallel runs.

3. For PVC conduits, use factory made elbows for all bends 30 degrees or larger. Use rigid steel elbows on all 90-degree bends in PVC conduits. Use acceptable heating methods for forming smaller bends.

4. Make no bends in flexible conduit that exceed 90 degrees or allowable bending radius of the cable to be installed or that significantly restricts the conduits flexibility.

D. Bushing and Insulating Sleeves:

1. Where metallic conduit enters metal equipment enclosures through conduit openings, install a bonding bushing on the end of each conduit. Install a bonding jumper from the bushing to any equipment ground bus or ground pad.

2. If neither exists, connect the jumper to a threaded bolt connection to the metallic enclosure.

3. Use manufacturer's standard insulating sleeves in all metallic conduits or insulated bushings terminating at an enclosure.

E. Expansion Joints: Provide suitable expansion fittings for raceways crossing expansion joints in structures or concrete slabs, or provide other suitable means to compensate for expansion and contraction. Provide for the high rate of thermal expansion and contraction of PVC conduit by providing PVC expansion joints as recommended by the manufacturer and as required.

F. PVC Conduit: Solvent weld PVC conduit joints with solvent recommended by the conduit manufacturer. Follow manufacturer's solvent welding instructions and provide watertight joints. Use acceptable PVC terminal adapters when joining PVC conduit to metallic fittings. Use acceptable PVC female adapters when joining PVC conduit to rigid metal conduit.

G. PVC Coated Rigid Steel Conduit: Install in strict accordance with the manufacturer's instructions. Touch up any damage to the coating with conduit manufacturer acceptable patching compound. PVC boot shall cover all threads. Where belled conduits are used, bevel the unbelled end of the joint before joining. Leave no metallic threads uncovered.

H. Penetrations:

1. Seal the interior of all raceways entering structures at the first box or outlet with oakum or suitable plastic expandable compound to prevent the entrance into the structure of gases, liquids, or rodents.

2. Dry pack with nonshrink grout around raceways that penetrate concrete walls, floors, or ceilings aboveground, or use one of the methods specified for underground penetrations.

3. Where an underground conduit enters a structure through a concrete roof or a membrane waterproofed wall or floor, provide an acceptable, malleable iron, watertight, entrance sealing device. Provide a device having a gland type sealing assembly at each end with pressure bushings which may be tightened at any time when there is no raceway concrete encasement specified or indicated,. When there is raceway concrete encasement specified or indicated, provide such a device with a gland type sealing assembly on the accessible side. Securely anchor all such devices into the masonry construction with one or more integral flanges. Secure membrane waterproofing to such devices in a permanently watertight manner.

4. Where an underground raceway without concrete encasement enters a structure through a nonwaterproofed wall or floor, install a sleeve made of Schedule 40 galvanized pipe.

5. Fill the space between the conduit and sleeve with a suitable plastic expandable compound, or oakum and lead joint, on each side of the wall or floor in such a manner as to prevent entrance of moisture. A watertight entrance sealing device as specified may be used in lieu of the sleeve.

6. Where raceways penetrate fire-rated walls, floors, or ceilings, fire stop openings around electrical penetrations to maintain the fire-resistance rating.

7. Raceways passing through roofs shall be flashed.

8. Provide conduit seals where required by Article 500 of the LAEC.

3.09 INSTALLATION REQUIREMENTS FOR UNDERGROUND DIRECT BURIAL CONCRETE-ENCASED RACEWAYS

A. General:

1. Coordinate installation of underground raceways with other outside and building construction work. Maintain existing outside utilities in operation unless otherwise authorized by the ENGINEER.

2. Remove entirely and properly reinstall all raceway installations not in compliance with these requirements.

3. Do not use union type fittings underground.

4. Provide a minimum cover per NEC Table 300.5 for all underground raceways unless otherwise indicated. Warning tape as specified in Part 2 shall be placed no less than 12 inches above conduit and duct bank.

5. Where a concrete-encased duct bank is installed over an extensive area of disturbed earth such as that within the periphery of a building, provide a separate concrete base under the duct bank to ensure stability of raceways during installation. Allow this base to set before the duct bank is installed.

6. Do not backfill underground direct burial and concrete-encased raceways until they have been inspected by the ENGINEER and the INSPECTOR.

7. Warning Tapes: Bury warning tapes approximately 8-inches below grade and above all underground conduit runs or duct banks. Align parallel to and within 12-inches of the centerline of runs.

B. Separation and Support:

1. Separate parallel runs of two or more raceways in a single trench with preformed, nonmetallic spacers designed for the purpose. Install spacers at intervals not greater than

that specified in the LAEC for support of the type raceways used, and in no case greater than 10-feet.

2. Support raceways installed in fill areas to prevent accidental bending until backfilling is complete. Tie raceways to supports, and raceways and supports to the ground, so that raceways will not be displaced when concrete encasement or earth backfill is placed.

C. Arrangement and Routing:

1. Arrange multiple conduit runs substantially in accordance with any details shown on the Drawings. Locate underground conduits where indicated on the Drawings and graded to the elevations shown.

2. Make minor changes in location or cross-section as necessary to avoid obstructions or conflicts. Where raceway runs cannot be installed substantially as shown because of conditions not discoverable prior to digging of trenches, refer the condition to the ENGINEER for instructions before further work is done.

3. Where other utility piping systems are encountered or being installed along a raceway route, maintain a 12-inch minimum vertical separation between raceways and other systems at crossings. Maintain a 12-inch minimum separation between raceways and other systems in parallel runs. Do not place raceways over valves or couplings in other piping systems. Refer conflicts with these requirements to the ENGINEER for instructions before further work is done.

4. Provide insulated grounding bushings on all metallic raceways entering manholes. Provide bell-ends flush with manhole walls on all nonmetallic raceways entering manholes.

5. In multiple conduits runs, stagger raceway coupling locations so that couplings in adjacent raceways are not in the same transverse line.

6. Provide markers at grade to indicate the direction of underground conduits provided under this Contract. Provide markers consisting of double-ended arrows, straight for straight runs and bent at locations where runs change direction. Provide markers at all bends and at intervals not exceeding 100-feet in straight runs. Use markers made of sheet bronze not less than 1/4-inch thick embedded in and secured to the top of concrete posts. Use markers not less than 10-inches long and 3/4-inch wide and marked ELECTRIC CABLES in letters 1/4-inch high incised into the bronze to a depth of 3/32-inch.

7. All conduits shall enter maintenance holes and structures at right angles.

D. Provide expandable grommets for concrete encased raceway passing through wall to the earth.

E. Concrete Encasement:

1. Where indicated, encase conduits in a red concrete envelope sized as indicated and located at the elevation shown. Use 2,500 psi concrete as specified in Section 03300 CAST-IN-PLACE CONCRETE.

2. Maintain a grade of at least 4-inches per 100-feet, either from one maintenance hole or pull box to the next, or from a high point between them, depending on the surface contour.

3. Hold conduits for concrete-encased raceways securely in place by acceptable window type spacer supports. Where, in the opinion of the ENGINEER, ground conditions are such as to require concrete forms, install forms constructed of materials and in a manner

acceptable to the ENGINEER. No variations greater than 1/2-inch in 50-feet will be permitted from a straight line.

4. Envelopes may be poured directly against the sides of trenches if the cut is clean, even, and free of loose material. Remove loose material from trenches before and during pouring of concrete to ensure sound envelopes. Carefully spade concrete during pouring to eliminate all voids under and between raceways and honeycombing of the exterior surface.

5. Do not use power-driven tampers unless they are specifically designed for the application, in order to ensure that the watertight integrity of the raceways is maintained.

6. Generally, pour an entire concrete envelope in one continuous pour. Where more than one pour is necessary, terminate each pour in a sloped plane, and insert 3/4-inch reinforcing rod dowels extending into the concrete 18-inches minimum on each side of the joint. Obtain Engineers' approval for the number and location of dowels.

7. Provide reinforcement shown where envelopes connect to manholes or building structures to prevent shearing of joints.

F. Backfill Installation Above Conduit Zone of Direct Burial Conduit or Above Concrete Envelope of Concrete Encased Conduit:

1. Provide backfill meeting the requirements of Section 02310 "Earthwork" for above the conduit zone of direct burial conduit and above concrete envelope of concrete-encased conduit.

2. Backfill material above the conduit zone of direct burial conduit or above concrete envelope of concrete-encased conduit may be selected from the excavated material, if it contains no particles larger than 3-inches in diameter and is free from roots or debris. Imported material meeting these same requirements may be used in lieu of material from the excavation. Compact backfill in maximum 12-inch layers to at least 95 percent of the maximum density at optimum moisture content as determined by ASTM D 1557.

3.10 MAINTENANCE HOLES AND HANDHOLES

A. Install maintenance holes and handholes where shown on the Drawings. Provide excavation, shoring, bracing, backfilling, grading, etc., in accordance with requirements specified elsewhere in these Contract Documents.

B. Do not install maintenance holes or handholes until final conduit grading, including field changes necessitated by underground interferences, has been determined. Set frames to final grades as required.

C. Make installation so that raceways enter maintenance holes or handholes at nearly right angles and as near as possible to one end of a wall, unless otherwise indicated.

D. Install one ground rod in each maintenance hole and handhole. Connect all noncurrent-carrying metal parts in the maintenance holes and any metallic raceway grounding bushings to this ground rod with No. 6 AWG (minimum) copper conductor.

E. CONTRACTOR shall clean and remove all debris from maintenance holes and handholes whether new or existing.

3.11 WIREWAYS

A. Mount wireways securely in accordance with the LAEC and manufacturer's instructions. Locate removable cover or hinged cover on accessible vertical face of wireway unless otherwise indicated.

3.12 CABLE TRAYS - NOT USED

3.13 PREPARATION FOR PULLING IN CONDUCTORS

A. Do not install crushed or deformed raceways. Avoid traps in raceways where possible. Take care to prevent the lodging of plaster, concrete, dirt, or trash in raceways, boxes, fittings, and equipment during the course of construction. Make raceways entirely free of obstructions or replace them. Ream all raceways, remove burrs, and clean raceway interior before introducing conductors or pull wires.

B. Immediately after installation, plug or cap all raceway ends with watertight and dust-tight seals until the time for pulling in conductors.

C. For concrete-encased raceways, after the concrete envelope has set, pull a mandrel of a diameter approximately 1/4-inch less than the raceway inside diameter, through each raceway. Then pull a bristle brush through each raceway to remove debris.

3.14 EMPTY RACEWAYS

A. Certain raceways will have no conductors pulled in as part of this Contract. Identify with tags at each end and at any intermediate pull point the origin and destination of each such empty raceway. Where a raceway has been identified with a name (number) in the Raceway Schedule, use that name on the tag in lieu of origin and destination. Provide a removable permanent cap over each end of each empty raceway. Mandrel and provide a nylon pull cord in each empty raceway.

3.15 PAINTING

A. Paint raceway systems in accordance with and as specified in Section 09800 "Protective Coating."

3.16 TESTS

A. Continuity:

1. Test resistance of feeder conduits from service to point of final distribution using 1 conductor return.
2. Maximum: 25 ohms resistance.

END OF SECTION

SECTION 16150
CONDUCTORS, 600 VOLTS AND BELOW

PART 1 - GENERAL

1.01 SCOPE

A. Required: Provide and install insulated, solid and/or stranded type wire conductors and wire connectors for circuit voltage of 600 volts or less as herein specified.

B. Comply with the General Conditions, General Requirements and Section 16020 - Municipal Facilities General Electrical Requirements of this Division 16 concerning definitions, guarantees, submittals, as-builts, clean-up, etc. as applicable to work of this Section.

PART 2 - PRODUCTS

2.01 CONDUCTORS AND INSULATION

A. Insulated wire conductors for circuit voltage, 600 volts or less, shall be copper. Conductors shall have UL approved 600 volt insulation of type specified below or elsewhere in the Specifications.

B. Branch Circuits and Feeders - Lighting and Power:

1. #10 AWG and smaller, solid wire.
2. #8 AWG and larger, stranded type.
3. Insulation @ 75 degrees C Type THW, THWN, XHHW, THHN.

C. For conductors installed in areas subjected to temperatures exceeding 140 degrees F., provide type FEPB, RHH or THHN.

D. For conductors installed in exposed conduit outside of buildings and conduit within or just under roofing material, provide type XHHW.

E. Control Circuits for Mechanical Equipment: Use 600 volt Underwriters' type THWN conductors except where subject to abnormally high temperatures such as on or near boilers. Under these conditions, use type FEPB.

2.02 MULTICONDUCTOR CABLE

A. Provide cable that is UL-listed Type TC, UV-resistant and conforms to the requirements of UL, NEC, or UL-listed Power Limited Circuit Cable or Power Limited Tray Cable that conforms to the requirements of NEC, as applicable. Provide cables permanently and legibly marked with the manufacturer's name, the maximum working voltage for which the cable was tested, the type of cable, and labeled UL.

B. Power cable color coding for phase identification shall be in accordance with this Specification. Multiconductor power cables with conductors 6 AWG and larger shall be identified by ICEA Method 3 (single-color compounds with surface printing of numbers and color designations), using Table E-2, and multiconductor cables with conductors 8 AWG and smaller shall be identified by ICEA Method 1 (colored compounds with tracers), using Table E-2.

C. All multiconductor cables with conductors 6 AWG and larger shall contain an integral insulated grounding conductor or bare copper stranded grounding conductor incorporated in the outer interstices of the assembled multiconductor cable. All multiconductor power cables 8 AWG and smaller shall contain an integral insulated grounding conductor meeting the sizing requirements of UL 1277.

D. Provide cables as specified under the type number in this Specification Section (Type 1, Type 2, etc.).

1. Type 1 (600 V, Multiconductor Control Cable, a two-conductor cable with green ground can be provided as a power cable to bring power to instruments, Type TC UV-Resistant):

2. General: Multiconductor control circuit (or instrument power) interconnection cable with ground shall be suitable for installation in open air, in cable trays, conduit or other raceways accepted by the ENGINEER. Maximum cable temperature rating shall be 90 degrees C dry locations, 75 degrees C wet locations. Cable shall pass vertical tray flame test.

3. Individual Conductors: 14 AWG, Class B stranded coated or uncoated copper.

4. Insulation and Jackets: Provide conductors having 15-mil PVC insulation with 4mil nylon jacket, and UL-listed as Type THHN/THWN. Color code the conductor group in accordance with ICEA S-95-658, Method 1, Table E-2. Include one full size green equipment grounding conductor. Bind conductor group with a spiral wrap of barrier tape. Provide cable with overall outer PVC jacket which is flame-retardant, sunlight and oil-resistant.

5. Provide only 2, 3, 4, 5, 7, 9, 12, 19, 25, 30-, and 37-conductor cables plus the green grounding conductor. Manufacturers: Belden, General Cable, Okonite, Southwire, or equal.

6. 600V Twisted Pair Control/Instrument Cable: Multi twisted pair cable with over-all shield. Type TC, 16 AWG stranded copper conductors with outer PVC jacket.

7. Type 2 (600 V, Multiconductor Power Cable, Type TC):

8. General: 3 or 4-conductor, 12 AWG to 4/0 AWG with ground and overall jacket. Suitable for installation in open air, in cable trays, conduit, or other raceways accepted by the ENGINEER. Maximum cable temperature rating shall be 90 degrees C dry locations, 75 degrees C wet locations.

9. Individual Conductors: Class B stranded, coated, or uncoated copper.

10. Insulation and Jacket: Provide conductors insulated with cross-linked polyethylene or ethylene-propylene, UL rated VW-1. Provide sunlight-and oil-resistant PVC outer jacket. Provide phase conductors color-coded red, black, and blue. Provide neutral conductor color-coded white with black tracer.

11. Manufacturers: Belden, General Cable, Okonite, Southwire, or equal.

12. Type 3 (600 V, 16 AWG, Twisted, Shielded Pair Instrumentation Cable, Type TC) (UL 62 and UL 1277).

13. General: Single-pair instrumentation cable designed for process control, computer, or data log applications. Suitable for installation in cable trays, conduit, or other raceways accepted by the ENGINEER. Maximum cable temperature rating shall be 90 degrees C dry locations, 75 degrees C wet locations.

14. Individual Conductors: Bare soft annealed copper, 7 conductor, Class B stranded; 20 AWG, stranded, and tinned copper drain wire.

15. Insulation and Jacket: Each conductor shall have 15-mil nominal PVC and 4-mil nylon insulation. Pair conductors shall be pigmented as shown in the chart below. Jacket shall be flame-retardant and sunlight-and oil-resistant PVC with 45-mil nominal thickness. Shield shall be 1.35-mil aluminum/mylar overlapped to provide 100 percent coverage.

16. Manufacturers: Okonite, Alpha Wire Corporation, Belden, or equal.

17. Type 4 (600 V, 16 AWG, Twisted, Shielded Triad Instrumentation Cable, Type TC) (UL 62 and UL 1277):

18. General: Single-triad instrumentation cable designed for process control, computer, or data log applications. Suitable for installation in cable tray, conduit, or other raceways accepted by the ENGINEER. Maximum cable temperature rating shall be 90 degrees C dry locations, 75 degrees C wet locations.

19. Conductors: Bare soft annealed copper, Class B stranded; 20 AWG, stranded, and tinned copper drain wire.

20. Insulation and Jacket: Each conductor shall have 15-mil nominal PVC and 4-mil nylon insulation. Triad conductors shall be pigmented black, red and white. Jacket shall be flame-retardant and sunlight-and oil-resistant PVC with 45-mil nominal thickness. Shield shall be 1.35-mil aluminum/mylar, overlapped to provide 100 percent coverage.

21. Manufacturers: Okonite, Alpha Wire Corporation, Belden, or equal.

E. Signal Circuit Wiring:

1. Conductor inside control panels shall be flexible stranded copper machine tool wire, UL-listed Type MTW/TEW, rated 600 V. Wires for instrument signal circuits and alarm input circuits shall be 14 AWG. All other wires, including shielded cables, shall be 16 AWG minimum. The minimum wire size shall be 18 AWG when wire is used to connect terminal blocks to Modicon input and/or output modules.

2. All 50 V and less wiring shall be run separately from 50 V and above wiring. Control panel layout shall divide the panel into two sides with wiring and devices that operate above 50 V on one side and below 50 V on the other.

3. PLC Communications Coaxial Cable: Provide RG-6 PLC communications coaxial cable where required. The cable shall be flexible with bonded aluminum quad shield. Center conductor shall be 18 AWG copper-coated steel. Dielectric coating shall be foam polyethylene. Jacket shall be flame retardant PVC. Maximum attenuation at 1.544 MHz shall be 0.48 dB/100 feet. Impedance shall be 75 ohms and capacitance shall be 16.2 pF per foot. Maximum pulling tension shall be 45 pounds. All necessary taps and connectors shall be provided.

4. Control Panel Internal Wire Insulation Colors: Conductors shall be identified by Insulation. Conductors supplying 120 V ac power on the load side of a disconnecting switch shall have black insulation for the ungrounded conductor and white insulation for the neutral.

F. Control Panel Internal Wire Marking: Each signal, control, alarm, and indicating circuit conductor internal to the control panel that is electrically continuous shall be designated by a single unique number which shall be shown on all shop drawings. These numbers shall be shown on all conductors at every terminal using machine printed white heat-shrink sleeves shrunk loosely shrunk to allow sleeves to be rotated.

G. Conductor and Cable Tags.

H. Refer to Specification 16190, Electrical Identification. Equipment Grounding Conductors:

1. Provide soft-drawn copper conductors, minimum 12 AWG, and as indicated or as required by NEC, for equipment grounding.

2. Provide conductors with green insulation of the same type as all other circuit wires.

120 V ac Power		**120 V ac Control**	
Hot	Black	**PLC Output**	Red
Neutral	White	**PLC Input**	Orange
Ground	Green		

24 V dc Power		**24 V dc Control**	
Positive (+)	Blue, mark (+)	**PLC Output**	Pink
Negative (-)	Blue, mark (-)	**PLC Input**	Purple
0-5 V dc Control		**4-20 mA Control**	
Positive (+)	Brown, mark (+)	**Positive (+)**	Red, White, or Clear
Negative (-)	Brown, mark (-)	**Negative (-)**	Black
Pulse Control		**OTHER**	
Positive (+)	Tan, mark (+)	**Any service not listed above**	Yellow
Negative (-)	Tan, mark (-)		

2.03 GENERAL FABRICATION

A. For General Wiring: Use type THHN-THWN where operating temperature is 90 degrees F or less, or shall use type AVA-AWM where temperature exceeds 90 degrees F or where exceeding 140 degrees provide type FEPB, RHH or THHN.

B. For General Wiring: Use No. 10 A.W.G. size and smaller solid type where flexibility or regular movement is not required, or use No. 8 A.W.G. stranded type where flexibility or regular movement is required.

C. The minimum conductor size for general wiring shall be No. 12 A.W.G. except as indicated otherwise on the Drawings.

D. Connectors for #10 conductors and smaller UL listed for 600 volts, approved for use with copper and/or cone shaped, expandable coil spring insert, insulated with a nylon shell and two wings placed opposite to each other to service as a "built-in" wrench. Shell shall be molded one-piece as manufactured by Ideal Industries "Wing Nut" connectors.

E. Connectors for #8 AWG and larger shall be screw pressure lugs made of high strength structural aluminum alloy and UL approved for use with copper wire as manufactured by Ilsco, T & B Burndy or O.Z. Companies.

F. Conductor insulation type, size and UL approval shall be printed with permanent white paint on all conductor insulation continually repeating.

G. Provide all conductors used for power, lighting, signal, control, and communications systems (operating at 600 volts and below) with a minimum insulation rating of 600 volts.

H. Minimum Size of Conductors: #12 AWG copper for power and lighting, #14 AWG copper for controls and low voltage wiring (less than 120 volts) if adequate.

I. All conductors shall be new and shall have been manufactured within 12 months of the date of delivery to the job-site and continuously stored where protected from the sun, heat or weather.

J. Deliver all conductors to the site on their original cable reels or in their original unbroken packages.

K. Provide all conductor packages and cable reels plainly marked or tagged with UL labels, AWG size, voltage rating, insulation type, type of stranding, manufacturer's name, trade name, and month and year when manufactured.

PART 3 - EXECUTION

3.01 GENERAL

A. All conductors shall be insulated and installed in raceways, cable trays, boxes, fixture or equipment enclosures unless specifically indicated otherwise on the Drawings.

B. Do not install conductors until raceway runs are completed with terminating enclosures installed and plastering, drywall, masonry, concrete, or other work which may damage conductors is completed, except as otherwise approved by the City Engineer. Raceways shall be clean and dry prior to installation of conductors.

C. Mechanical devices or equipment for pulling conductors shall be identified and suitable for the purposes. Vehicles, cranes, etc., shall not be used.

D. Group, tie wrap, and suitably identify the conductors of each system, where conductors of circuits with different electrical characteristics are installed in the same enclosure.

E. Conform control wiring to the wiring diagrams on the Mechanical Drawing and on the manufacturer's wiring diagrams as necessary to control the equipment in the manner specified in the Mechanical Specifications.

F. Pull Conductors: Use manufacturer-approved pulling compound or lubricant where necessary; compound used must not deteriorate conductor or insulation. Do not exceed manufacturer's recommended maximum pulling tensions and sidewall pressure values.

G. Use pulling means; including fish tape, cable, rope, and basket-weave wire/cable grips, which will not damage cables or raceway.

H. Wiring at Outlets: Install conductor at each outlet, with at least 6-inches of slack.

3.02 COLOR CODING

A. Required: For all branch circuit wiring, feeders, bonding and grounding conductors as follows:

1. 480/277 Volt 3 Phase 4 Wire Systems:

Phase A	Phase B	Phase C	Neutral
brown	orange	yellow	white

2. 208/120 Volt 3 Phase 4 Wire Systems:

Phase A	Phase B	Phase C	Neutral
black	red	blue	white

3. 240/120 Volt 3 Phase 4 Wire Systems:

Phase A	Phase B	Phase C	Neutral
black	orange	blue	white

4. 120/240 Volt 1 Phase 3 Wire Systems:

Phase A	Phase B	Neutral
black	red	white

5. Bonding or Grounding Conductors: Green or green with yellow stripe(s).

6. Do not use light gray or natural gray colors.

7. When a color is established, it shall be maintained throughout the entire length of the circuit, except that switch loops between 3-way or 4-way switches may be different colors.

8. Color coding for conductors No. 6 A.W.G. or smaller shall be accomplished by inherent insulation color; tags, paint tape or other marking shall not be used for color identification.

9. Mark each phase of leg in each panelboard with identifying tape.

3.03 TAGGING

A. General: Install identification markers on ungrounded conductors of all circuits, in switchboards, panelboards, pull, junction and outlet boxes, lighting fixtures, switches, receptacles and other terminating enclosures. Grounded circuit conductors shall have identification markers in switchboards, panelboards, and all enclosures where more than one circuit grounded circuit conductor is installed. Identification shall include switchboard, panelboard, or other source and circuit number. Tags shall be 3M Co. "Scotchcode" write-on tape or shall be pre-marked with self-adhesive wraparound cloth type EZ Code, Brady.

B. Tagging: Conductors shall be tagged in each junction box, pullbox, wireway or auxiliary gutter and at each device, motor outlet, panelboard, switchboard or other conductor termination. Tag shall show feeder number, size, phase and origin.

3.04 SPLICES

A. Make splices for No. 10 A.W.G. and smaller conductors with twist-on type pressure connectors suitable for the number and size of conductors. Connectors shall be Ideal Industries Inc., "Wingnut" or equal.

B. Make splices for No. 8 A.W.G. and larger conductors with bronze split-bolt or solderless compression type connectors requiring the use of a pressure tool. Connectors shall be wrapped with varnished cambric prior to taping, where tape is used as the insulating medium.

C. Make "pigtail" type splices at multiple conductor terminations for lighting fixtures, switches, receptacles, and other devices or outlets, to provide for connection of a single set of circuit conductors to the device or load. This requirement shall not apply to line and load conductors connected to GFCI type receptacles.

D. Install each feeder conductor without splice or joint, from equipment terminal to equipment terminal, except as specifically indicated otherwise on the Drawings.

3.05 MISCELLANEOUS (AS APPLICABLE)

A. Make all branch circuit and fixture joints for #10 AWG and smaller wire with UL approved connectors, listed for 600 volts. Provide Minnesota Mining and Manufacturing Co. insulated "Scotch locks", Ideal Co. "Wing-Nut", or T&B Burndy Co. "Piggy" connectors.

B. Make all branch circuit joints of #8 AWG and larger with screw pressure lugs, and insulate with electrical tape to 150% of the insulating value of the conductor insulation.

C. Tape all connections made with non-insulated type connectors with half-lapped, rubber-type tape, to 1-1/2 times the thickness of the conductor insulation, then cover with Scotch #33 tape.

D. Each circuit must correspond to the branch circuit number indicated on the panel schedule shown on the drawings except where departures are approved by the Architect.

E. Neatly group or tape together wiring within equipment enclosures.

F. Where conductors in conduit pass through exterior walls, a sealing compound of moisture-resistant material shall be applied in the ends of the conduits to seal around the conductors.

G. Megger tests shall be taken on all feeder conductors and on all conductors for motors over 15 HP. Tests shall be made in presence of the City's representative and prior to connection of equipment. Written reports of results shall be submitted to the City Engineer. Conductors testing below manufacturer's standard shall be replaced.

END OF SECTION

THIS PAGE INTENTIONALLY LEFT BLANK

SECTION 16170
CABINETS AND RACKS

PART 1 - GENERAL

1.01 GENERAL CONDITIONS

A. See the Conditions of the Contract (General, Supplementary and Special Conditions) and the General Requirements (Division 1).

1.02 WORK INCLUDED

A. This section covers all equipment cabinets and racks as shown on the drawings or as required to house the specified devices and equipment. The work under this section consists of furnishing materials and equipment, performing labor and services necessary for the installation of the cabinets and racks required for a complete system.

B. This specification applies to the Automatic Transfer Switch and the Variable Frequency Drive enclosures.

1.03 RELATED WORK SPECIFIED ELSEWHERE

A. Refer to all other Division 16 specification sections and drawings, and to the specifications and drawings under the General Construction Contract to ascertain the extent of work included.

1.04 REFERENCED SPECIFICATIONS, MATERIALS AND/OR CODES

A. City of Los Angeles Electrical Code, latest adopted edition.

B. Electronic Industries Alliance (EIA) Standards. EIA/ECA-310-E.

C. National Electrical Code.

1.05 COOPERATION WITH OTHER TRADES

A. The Contractor shall coordinate the work of the section with that of other sections as required to ensure that the entire work of this Project will be carried out in an orderly, complete and coordinated fashion.

1.06 SUBMITTALS

A. General: Submittals shall be made in accordance with the General Provisions of these specifications.

PART 2 - PRODUCTS

2.01 MATERIALS

A. Cabinets - Wall Mounted:

1. All equipment cabinets installed indoors shall be NEMA 1 enclosures.
2. All equipment cabinets installed outside or exposed to weather shall be NEMA 3R enclosures.
3. Cabinets shall be constructed of 14 gauge rolled steel.
4. Cabinet doors shall be furnished with key lockable doors with all cabinets under Division 16 keyed alike. In addition to key lockable doors, provide heavy duty padlock hasps for all outdoor cabinets.
5. All cabinets shall be furnished with removable steel back panels for mounting equipment. Exterior cabinets shall be equipped with an overall sunshield. In addition, displays shall receive individual shade hoods.
6. Cabinets shall be furnished with appropriate size and quantity of knock-outs for conduit entry. Exterior knock outs shall utilize water tight Meyer hubs and avoid top locations.
7. Cabinets shall be grounded as specified in Section 16290.
8. Indoor cabinets shall be provided with adequate vents. Include filtered supply fans and exhaust vents where the interior temperature would be more than 15 degrees F higher than ambient without the fans. Outdoor cabinets heat load shall be calculated using an outdoor ambient temperature of 115 degrees F and a maximum internal temperature of 130 degrees F. Provide a closed loop heat exchanger where required to meet heat transfer requirements or an air conditioner where the heat exchanger cannot meet the internal temperature requirement.
9. All cabinets shall be furnished with black on white laminated plastic name plates identifying each cabinet. Lettering shall be minimum 3/16" high.
10. Cabinet finish shall be ANSI 61 gray inside and out.
11. Cabinets shall be sized in strict accordance with the EIA/ECA-310-E.
12. Cabinet back panels shall be furnished with a ground bus bar.
13. Door size shall be selected to allow a minimum door swing of 90 degrees within the dimensional constraints of the equipment room.
14. Cabinets shall be equipped with index card holders and cards mounted behind heavy plastic on inside of cabinet doors.
15. Affix nameplates to cabinet doors with a minimum of two stainless steel escutcheon pins or screws.

B. Vertical Cabinet - Floor Mounted:

1. All vertical cabinets shall be free-standing floor mounted type having features and/or characteristics as follows:

   a. Panel Width - 19".

   b. Panel Height - 78-3/4".

   c. Overall Height - 87" Nominal.

   d. Overall Depth - 25" Nominal.

   e. Rear Door - Vented, except as otherwise specified.

   f. Front door with vents at top and bottom, except as otherwise specified.

   g. Plain top panel.

   h. Frame-14 ga. Cold rolled sheet steel.

   i. Side panels - 18 ga.

   j. Styled frames with trim.

   k. 19" EIA adjustable mounting rails for front and rear equipment mounting.

   l. Locks - all cabinets to be keyed alike.

   m. Units shall be pre-assembled type.

   n. Color - to be selected by Architect.

2. Cabinets grouped side-by-side shall have side panels on each section.

3. Furnish and install blank 19" panels of color to match cabinet for all unused vertical mounting units on front mounting rails. Maximum height of each filler panel shall be 10.5".

C. Power Strips:

1. Furnish and install plug-in or hardwired outlet strips as required to support the installed equipment.

2. Power strips shall have a metallic case.

3. Plug-in power strips shall be equipped with a locking plug and shall only be used with a compatible locking-type receptacle.

D. Pedestals:

1. Pedestals shall be weather-tight, seam welded, constructed of Type 316 stainless steel.

2. Pedestals shall be furnished with gasketed panel for access to equipment contained within. Panel shall be secured with security screws as specified in the Security Hardware Division of these specifications.

3. Pedestal shall be painted to withstand environmental conditions and the final color shall be as specified by the Architect.

4. Pedestal shall be pre-drilled for mounting of intercom stations, loop detectors, and other equipment as specified herein.

PART 3 - EXECUTION

3.01 EXECUTION

A. Cabinets:

1. Provide cabinets as necessary for proper installation of the equipment specified and in compliance with all codes and regulations.

2. Secure all cabinets in place with lead shield anchors and lag bolts to ensure compliance with seismic requirements.

3. Unused openings in cabinets shall be closed to afford protection equivalent to that of the wall of the cabinet.

B. Ventilation:

1. Furnish and install ventilation fans, vents, and filters for all cabinets where forced air cooling is required to maintain interior cabinet temperature at or below 95 degrees F.

2. For cabinets with forced ventilation, doors and side panels shall be solid with no louvers.

3. Division 17 Subcontractor shall select vented vs. forced air cabinets based on the environment's conditions of the equipment room and equipment to be installed in each cabinet.

C. Pedestals:

1. Provide pedestals at all locations shown on the drawings.

2. Secure pedestals to concrete base with four(4) redhead type anchors to ensure compliance with seismic requirements. Anchors shall be located such that they are only accessible from inside the enclosure.

3. Coordinate installation of required conduit such that all conduit is stubbed up inside pedestal enclosure.

4. Cabinets shall be large enough and equipment spaced in cabinets to provide adequate spacing for airflow and maintenance.

5. Locate all heat producing equipment, such as power supplies and amplifiers, at top of equipment cabinets.

3.02 COMPLETION

A. General:

1. Upon completion of the work, remove excess debris, materials, equipment, apparatus, tools and the like and leave the premises clean, neat and orderly.

2. All cables shall be dressed neatly in each cabinet and rack. Excess cable shall be trimmed and disposed of. Any unused cables shall be identified with stainless steel tags showing the origination and marked as "spare".

END OF SECTION

THIS PAGE INTENTIONALLY LEFT BLANK

SECTION 16180
WIRING DEVICES

PART 1 - GENERAL

1.01 SCOPE

A. Required: Provide and install wiring devices as indicated on the Contract Drawing and herein specified.

B. Comply with the General Conditions, General Requirements and Section 16020 of this Division 16 concerning definitions, guarantees, submittals, as-builts, clean-up, etc. as applicable to work of this Section.

1.02 SUBMITTALS

A. Submit under the provision of Section 01330.

B. Product Data: For each product specified.

C. Maintenance Data: For materials and products to include in maintenance manuals specified in Division 1.

PART 2 - PRODUCTS

2.01 GENERAL

A. All wiring devices shall be specification grade, UL listed and labeled, conform to NEMA standards and meet the requirements of Federal specifications.

2.02 BOXES

A. Types:

1. Provide galvanized steel knockout type outlet boxes with suitable plaster rings of similar material, for interior concealed wiring in dry, non-hazardous (classified) locations.
2. Provide cast metal boxes for floor outlets, and where installed in walls direct contact with the earth. Floor outlet boxes shall be Walker box 880 series or equal.
3. Provide weatherproof cast metal outlet boxes for surface wiring, or in wet or damp locations, unless otherwise directed by the City Engineer. Boxes shall be Crouse-Hinds FS, FD, GRF, GS, or VXF series.
4. Provide sheet steel type with screw cover for pull and junction boxes over 100 cubic inches, in dry non-hazardous (classified) locations.
5. See also Section 16110 for other types of boxes as applicable.

B. Sizes: In accordance with Code for the number and size of conductors, but not less than indicated on the drawings nor less than 4 inch square trade size, except for cast metal type, or multigang masonry type embedded in concrete or masonry walls.

C. Accessories:

1. Plaster rings, fixture studs, covers, plates, dividers, etc., as required.

2. Weatherproof covers, plates, and other accessories in wet or damp locations.

2.03 SWITCHES

A. All switches shall be specification grade and meet Federal Spec. W-S-896E.

B. Provide screw type; push-in type connections not acceptable.

C. Switches shall be self-grounding, color coded, silent or quiet type, and rated 120-277 Volts AC, 20 ampere rating, totally enclosed, where installed in AC systems Bakelite or composition base with "T" rating for AC loads, standard toggle handle, side wired only and binding screw terminals with screwdriver slot.

D. Where pilot lights are specified for switches, they shall be the neon type 1/25 W. mounted under the same plate as the switch. Lighted toggles are not acceptable.

E. Momentary contact switches shall be three position toggle, 20 Ampere rating at 120 Volts AC.

F. Single pole switches shall be equal to Bryant 1121-I; two pole switches Bryant 1122-I; three way switches Bryant 1123-I; four way switches Bryant 1124-I.

G. Approved Manufacturers:

1. Hubbell/Bryant;

2. General Electric.

3. Or equal.

2.04 PLATES AND COVERS

A. Required: For all switches, receptacles, junction boxes, telephone and other outlets.

B. Finishes of Plates and Devices:

Location	Plate	Device
General interior finished areas	White	White
Interior finished areas over wood panels	Black	Black
On exterior with spring loaded cover	Corrosion resistant	Brown
In equipment rooms or other generally unfinished areas	Galvanized	Brown
Janitor and utility rooms	Stainless steel	Gray
Toilet rooms	Stainless steel	Ivory

C. Provide engraved or etched plates for all lock switches, pilot switches, switches from which the equipment or circuit controlled cannot be readily seen, three or more switches under a common plate and for switches as indicated.

D. Stainless steel plates, type 302 non-magnetic with beveled edges, 0.040" thick with satin finish. Leviton 84000-40 series or approved equal.

E. Galvanized steel plates shall be square or rectangular and hot dipped galvanized or sherardized beveled edges and 0.040" thick.

F. Provide weatherproof receptacles with spring-loaded, corrosion resistant covers with gasket for mounting on outdoor type or flush wall boxes. Leviton 6196-V or approved equal.

G. Provide plates equipped with close fitting openings for the exact device to be used. Provide plates for telephone outlets equipped with bushed openings. Synthetic plates shall be smooth finish as manufactured by Pass & Seymour, Sierra, Leviton, or approved equal.

H. Provide brass covers for floor receptacles with duplex flap opening flush with floor.

I. Provide brass covers for data and communications floor outlets with 2-1/8 x 1 inch combination threaded opening.

J. Engraved plates and covers for equipment and controls, motors, for switches out of sight of the equipment controlled, for receptacles rated other than 125 volts, and for ganged switches (except no more than two switches controlling lights in the same room). Engraving shall provide positive identification acceptable to the City Engineer.

2.05 RECEPTACLES

A. Types:

1. All receptacles shall be specification grade and meet Federal Spec. WC 596 E.
2. Provide screw terminal type receptacles. Push-in type connections are not acceptable.
3. Straight blade 125 volt, 15 and 20 ampere duplex type shall be equal to Bryant 5262-I or 5263-I; single type shall be Bryant 5661-I or 5461-I.
4. Straight blade 250 volt, 15 and 20 ampere duplex type shall be equal to Bryant 5662-I or 5462-I; single type shall be Bryant 5661-I or 5461-I.
5. Combination duplex receptacles, straight blade 125/250 volt, 15 and 20 amperes, shall be equal to Bryant 5292-I or 5492-I.
6. Clock hanger receptacles shall be Bryant 2828-GS or equal.
7. Special outlets of other types shall be as indicated on the Contract Drawings.

2.06 CONTROLS

A. Required: For all equipment furnished in this and other divisions, as required by Code, and as indicated on the Contract Drawings and in the specifications. All devices shall be listed by U.L. or another approved testing laboratory.

B. Types:

1. Circuit Breakers: Thermal-magnetic with interrupting and trip ratings as indicated on the drawings. Equip each breaker with a device for individual padlocking. Circuit breakers shall meet Federal Specifications W-C-375B.

2. Enclosed Safety Switches: Shall be externally operable, heavy duty "tease-proof", fusible and nonfusible with number of poles and ratings as indicated on the Contract Drawings. Provide suitable rejection type fuse holders for Class R fuses. Switches shall meet Federal Spec. W-S-865C. Switches shall be as manufactured by Square D Co. or equal.

3. Fuses: All fuses shall meet U.L. Standard 198. Provide a label within each fuse enclosure indicating fuse replacement type and ratings. Provide one complete set of each type and rating of fuses and limiters, as spares. Fuses shall be one of the following types:

   a. Current-limiting Class L; Bussman KRP-C or KTU.

   b. Current-limiting Class J; Bussman JKS or JHC.

   c. Dual element Class RK-1; Bussman KTS-R or KTN-R.

   d. Dual element Class RK-5; Bussman FRS-R or FRN-R.

   e. Low Peak dual element Class RK-5; Bussman LPS-R or LPN-R.

   f. For secondary protection of control transformers rated 500 V.A. and 50 volts, or less; Bussman FNQ fuses with HPS-D or HPL-B fuse holder or equal.

   g. Fuses for direct-current circuits shall be identified for the use.

   h. Other required fuses, if not specified, shall be standard nonrenewable type; Bussman FRN or FRS for circuits where available fault current is 10,000 amperes or less.

4. Terminal connection blocks shall be provided in switch and circuit breaker enclosures in which grounded (neutral) conductors are installed.

5. Magnetic Motor Starters: Shall be across-the-line start type with overload and low voltage protection; Square D. Co. Class 8536. Combination starters shall be fusible or nonfusible disconnect switch type; Square D. Co. Class 8538, or motor circuit protector type (instantaneous trip only); Square D. Co. Class 8539. Reversing starters shall be Square D. Co. Class 8736 or 8739 or equal. Ratings shall be as indicated on the Drawings. Equip each circuit breaker with a device for individual padlocking.

6. Manual Motor Starters: Pushbutton type with overloads; Square D. Co. Class 2510 Type M. Toggle type with overloads; Square D. Co. Class 2510 Type F. Toggle type without overloads; Square D. Co. Class 2510 Type K or equal. Each device shall have provision for padlocking.

7. General Purpose Contactors: Shall be ASCO 1000 Series or equal with number of poles and ratings as indicated on the drawings. Provide suitable hinged door enclosures.

8. Lighting Contactors: Electrically operated, mechanically held, with coil clearing contacts; ASCO Remote Control (RC) Switches or equal with number of poles and ratings. Provide suitable hinged door enclosures.

9. Pushbutton and Other Control Devices: Shall be Square D.Co. Class 9001 Type K or equal, in suitable enclosures with legend plates.

10. Pilot Lights: Shall be Square D. Co. Class 9001 Type K, transformer type or equal. Shall have push-to-test feature where installed in switchboards or motor control centers.

11. Control Relays: Shall be Square D. Co. Class 8501 Types D, H, or L. or equal. Install relays in suitable enclosures.

12. Time Switches: Provide types with minimum 10-hour spring driven automatic rewind reserve power. For control of mechanical systems or equipment provide 7 day dial type with features permitting daily control or omission; Paragon 7000 Series. For control of mechanically-held lighting contactors provide astronomic type with day omitting device and momentary contact single pole double-throw switching; Paragon 47216-OSZ or equal.

13. Emergency Control Switches: Shall be ASCO equal to #124 Series break-glass devices for mechanical or data processing rooms or similar applications.

14. Three-Position Selector Switches: Shall be equal to Bryant 4922-I for maintained contact type; Bryant 4921-I for momentary contact type.

15. Manual Timers: Spring-wound timers shall be equal to M.R. Rhoades Inc. "Mark-Time" 125 V. 20 A.

16. Identification: Identify all control and disconnecting devices by engraved laminated plastic nameplates designating the equipment controlled, except where device plates are engraved.

    a. Motors and other equipment shall be suitably and durably identified to correspond to the control or disconnecting device. Nameplate lettering shall be white on black finish and 1/8 inch high minimum.

    b. Marking shall be as indicated on the drawings or as approved by the City Engineer. Nameplates shall be affixed with a minimum of two escutcheon pins or screws.

PART 3 - EXECUTION

3.01 GENERAL

Each class of device shall be furnished by one manufacturer for the total project. Mixing of devices by different suppliers will not be permitted.

3.02 BOX INSTALLATION

A. Install boxes where indicated on the Contract Drawings and coordinate locations with structural and architectural features for proper installation. Boxes shall be accessible.

B. Install boxes for wall mounted local switches at 4 feet to center above floor or standing surface unless otherwise directed by the City Engineer. The maximum height in handicapped areas shall be 48 inches.

C. Install boxes for wall mounted receptacles, signal and communication outlets at 15 inches to center above floor or standing surface except where located above counter tops, or used for clock outlets, or as otherwise indicated on the Drawings or directed by the City Engineer.

D. Install boxes for wall mounted fixtures, speakers, cameras, etc., at 7 feet to center above floor or standing surface, or as otherwise indicated on the Contract Drawings or directed by the City Engineer.

E. Install boxes for wall mounted thermostats at 4 feet to center above floors or standing surface, or as otherwise indicated on the Contract Drawings or directed by the City Engineer.

F. Boxes shall be securely supported. Boxes for flush outlets shall be mounted on bar hangers or brackets with the front edge of the box or plaster ring flush with combustible finish surfaces and not more than 1/4 inch behind non-combustible finish surfaces. Do not use nails for direct support of boxes. Do not use extension boxes (rings) for installation of flush outlets. Flush boxes used for support lighting fixtures or other equipment shall be securely fastened to two structural support members unless embedded in masonry or concrete. Do not use powder-driven fastening devices unless specifically approved by the City Engineer.

3.03 RECEPTACLE AND SNAP SWITCH INSTALLATION

A. General:

1. Install receptacles and switches square, level, secure, and connected to a single set of circuit conductors at each outlet. Plaster ears of receptacles and switches installed in flush boxes shall be seated against the finish surface.
2. Install closely adjacent snap switches in a single multi-gang type box, unless otherwise directed by the City Engineer.
3. Install permanent barriers between switches where the voltage between switches exceed 300 volts.
4. Connect all devices by wrapping conductor around binding screw terminals.
5. Provide GFCI type receptacles in toilet, kitchen counters and for all outdoor locations where required by code.

3.04 OUTLET PLATES AND COVER INSTALLATIONS

A. General:

1. Install square, level and secure. Plates installed at flush outlets shall be seated against the finish.
2. Properly identify plates and covers as required and noted in Subsections 2. 5 D and K of this Section as applicable.
3. Provide jumbo size plates for outlets installed in masonry walls.
4. Properly align and plumb all devices and plates. Fit plates flat against walls and tights against surfaces of devices without strain on the plate.
5. Code sized (#12 minimum) bonding jumper shall connect grounded outlet box to receptacle grounding terminal on all flush mounted units.

3.05 MISCELLANEOUS

A. Install switches, convenience and telephone outlets vertically in all locations unless otherwise indicated.

B. Install convenience and telephone outlets horizontally where noted on Drawings, elevations, mill work, or notations. Locate grounding prong to the left when facing the outlets.

C. Where convenience outlets are mounted vertically, locate ground prong at bottom.

END OF SECTION

SECTION 16190
ELECTRICAL IDENTIFICATION

PART 1 - GENERAL

1.01 SCOPE

A. Required: Furnish and install nameplates and warning sign where indicated on the Contract Drawings or herein specified.

B. Comply with the General Conditions, General Requirements and Section 16020 - Municipal Facilities General Electrical Requirements of this Division 16 concerning definitions, guarantees, submittals, as-builts, clean-up, etc. as applicable to work of this Section.

C. Work includes but is not necessarily limited to the following:

1. Nameplates and warning signs permanently installed on all electrical equipment and devices including, but not limited to, the following items:
2. Transformers, switchboards, motor control centers, panelboards, variable frequency drives, pullboxes, cabinets and motors.
3. Enclosures for all separately enclosed devices including, but not limited to, disconnect switches, circuit breakers, contactors, time switches control stations and relays, fire alarm panels and lighting control panel.
4. Special systems such as, but not limited to, warning and signal systems. Identification shall be at each equipment rack, terminal cabinet, control panel, annunciator and pullbox.
5. Devices mounted within and part of equipment including circuit breakers, switches, control devices, control transformers, relays, indication devices and instruments.

1.02 REFERENCE SPECIFICATIONS, CODES AND STANDARDS

A. All Work specified herein shall conform to or exceed the applicable requirements of the referenced portions of the following publications to the extent that the provisions thereof are not in conflict with other provisions of these Specifications.

B. Comply with the applicable editions of the following codes, regulations, and standards:

1. Codes and Regulations:

29 CFR 1910	Code of Federal Regulations, Title 29, Part 1910, U.S. Occupational Safety and Health Standards (OSHA).
CCR	California Code of Regulations, Title 8, Div. 1, Chap. 4, Subchap. 5, Electrical Safety Orders.
CCR	California Code of Regulations, Title 8, Industrial Relations (Cal/OSHA), other applicable provisions.
NFPA 70	National Electrical Code (NEC).

2. Industry Standard:

IEEE C37.2	Electrical Power System Device Function Numbers, Acronyms, and Contact Designations.

C. Comply with the applicable reference Specifications as specified in the General Requirements and the Additional General Requirements.

PART 2 - PRODUCTS

2.01 NAMEPLATE DESIGNATIONS SHALL CLEARLY STATE

A. Manufacturer's nameplate including equipment design rating of current, voltage, KVA, HP, bus bracing rating or as applicable.

B. Equipment nameplates designating system usage and purpose, system nominal voltage, equipment rating in KVA, amperes, HP and RPM as applicable. Designation data per drawings shall be supplied with Shop Drawings approval.

C. Panelboard nameplates showing panel designation, voltage, phase and source.

2.02 MANUFACTURERS DEVICE NAMEPLATES

Device usage, purpose, or circuit number; manufacturer and electrical characteristic ratings including the following:

A. Circuit Breakers: Voltage, continuous current, maximum interrupting current and trip current.

B. Switches: Voltage, continuous current, horsepower or maximum current switching. If fused, include nameplate stating "Fuses must be replaced with current limiting type of identical characteristics".

C. Contactors: Voltage, continuous current, horsepower or interrupting current, and whether "mechanically held" or "electrically held".

D. Motors: Rated voltage, full load amperes, frequency, phases, speed, horsepower, code letter rating, time rating, type of winding, class and temperature.

E. Controllers: Voltage, current, horsepower and trip setting of motor running overcurrent protection.

F. Motor Control Centers: Horizontal and vertical bus ratings.

2.03 MATERIALS

A. For Nameplates: Three layer laminated plastic or Micarta with engraved black letters over white background.

B. For Emergency Equipment: Use engraved white letters over red background.

C. For Warning Signs: Minimum 18 gauge steel with red lettering on white porcelain enamel finish.

PART 3 - EXECUTION

3.01 MOUNTING

Nameplates shall be mounted by self-tapping, threaded stainless steel screws and bolts, or by rivets. adhesive types are not acceptable.

3.02 MINIMUM LETTER HEIGHTS ON NAMEPLATES (AS APPLICABLE)

A. Panelboards, Switchboards and Motor Control Centers and Special Systems Enclosures: 1/4 inch identifies equipment designation; 3/16 inch identifies voltage rating and source.

B. Individual Circuit Breakers, Switches, and Motor Starters in Panelboards, Switchboards, and Motor Control Centers: 1/4 inch identifies circuit and load served, including location.

C. Individual Circuit Breakers, Enclosed Switches, and Motor Starters: 1/4 inch identify load served.

D. Transformers: 1/4 inch identifies equipment designation; 3/16 inch identifies primary and secondary voltages, primary source and secondary load. Include location of primary source or secondary load if remote from transformer.

3.03 WARNING SIGNS

A. Warning signs shall be permanently mounted with stainless steel screws or nickel-plated brass bolts.

B. Warning signs to read "DANGER - HIGH VOLTAGE", with letters 1-1/2 inch high, 1/4 inch stroke minimum.

C. Provide warning sign on all doors or immediately next to door for equipment rooms or closets containing equipment energized above 150 volts to ground.

END OF SECTION

THIS PAGE INTENTIONALLY LEFT BLANK

SECTION 16200
MOTOR CONTROL CENTERS

PART 1 - GENERAL

1.01 RELATED DOCUMENTS

A. Drawings and general provisions of the Contract, including General and Supplementary Conditions and Division 1 Specification Sections, apply to this Section.

B. Related Sections: The following sections contain requirements that relate to this section:

1. Section 16560 "Municipal Facilities Electrical Commissioning Requirements" for commissioning requirements.
2. Section 16570 "Municipal Facilities Electrical Testing Requirements" for testing requirements.

1.02 SUMMARY

A. This Section includes motor-control centers for use on AC circuits rated 600 V and less.

B. Related Sections include the following:

1. Section 16190, "Electrical Identification" for labeling materials.
2. Section 16210, "Switches, Disconnect and Safety".

1.03 SUBMITTALS

A. Submit under the provisions of Section 01330.

B. Product Data: For products specified in this Section. Include dimensions, ratings, short-circuit rating, and data on features and components.

C. Shop Drawings: For each motor-control center specified in this Section. Include dimensioned plans, elevations, and component lists. Show ratings, including short-time and short-circuit ratings, and horizontal and vertical bus ampacities.

1. Schedule of features, characteristics, ratings, and factory settings of individual motor-control center units.
2. Wiring Diagrams: Interconnecting wiring diagrams pertinent to class and type specified for motor-control center. Schematic diagram of each type of controller unit indicated.

D. Field Test Reports: Indicate and interpret test results for compliance with performance requirements.

E. Maintenance Data: For products to include in the maintenance manuals specified in Division 1. Include operating instructions required per 3.4.B.

F. Load-Current and Overload-Relay Heater List: Compile after motors have been installed and arrange to demonstrate that selection of heaters suits actual motor nameplate full-load currents.

G. Qualification Data for Field Testing Agency: Certificates, signed by Contractor, certifying that agency complies with requirements specified in "Quality Assurance" Article below.

1.04 QUALITY ASSURANCE

A. Manufacturer Qualifications: Maintain, within 100 miles of Project site, a service center capable of providing training, parts, and emergency maintenance and repairs.

B. Field Testing Agency Qualifications: An independent testing agency with experience and capability to satisfactorily conduct testing indicated without delaying the Work. Evaluation criteria shall be according to ASTM E 699.

C. Source Limitations: Obtain similar motor-control devices through one source from a single manufacturer.

D. Comply with NFPA 70 NEMA, IEEE, UL & ANSI Standards.

E. Listing and Labeling: Provide motor-control centers and components specified in this Section that are listed and labeled.

1. The Terms "Listed" and "Labeled": As defined in the National Electrical Code, Article 100.
2. Listing and Labeling Agency Qualifications: A "Nationally Recognized Testing Laboratory" as defined in OSHA Regulation 1910.7.

F. Product Selection for Restricted Space: Drawings indicate maximum dimensions for motor-control centers, including clearances between motor-control centers and adjacent surfaces and items, and are based on types and models indicated. Other manufacturers' motor-control centers with equal performance characteristics and complying with indicated maximum dimensions may be considered. Refer to Section 01330, "Shop Drawings/Submittals."

1.05 DELIVERY, STORAGE, AND HANDLING

A. Deliver in shipping splits of lengths that can be moved past obstructions in delivery path as indicated.

B. Store so condensation will not occur on or in motor-control centers. Provide temporary heaters as required to prevent condensation.

C. Handle motor-control centers according to NEMA ICS 2.3, "Instructions for the Handling, Installation, Operation, and Maintenance of Motor Control Centers." Use factory-installed lifting provisions.

1.06 COORDINATION

A. Coordinate features of controllers and accessory devices with pilot devices and control circuits to which they connect.

B. Coordinate features, accessories, and functions of each motor controller with the ratings and characteristics of the supply circuit, the motor, the required control sequence, and the duty cycle of the motor and load.

1.07 EXTRA MATERIALS

A. Furnish extra materials described below that match products installed, are packaged with protective covering for storage, and are identified with labels describing contents.

1. Spare Indicating Lights: Furnish 6 of each type required.

PART 2 - PRODUCTS

2.01 MANUFACTURERS

A. Available Manufacturers: Subject to compliance with requirements, manufacturers offering products that may be incorporated into the Work include, but are not limited to, the following:

1. Eaton;
2. Siemens;
3. Schneider Electric;
4. Or equal.

2.02 MOTOR-CONTROL CENTERS

A. Wiring: NEMA ICS 3, Class I, Type B.

B. Enclosures: Free-standing structure as indicated. U.L. listed, NEMA 250, Type 2, unless otherwise indicated to meet environmental conditions at installed location.

1. Outdoor Locations: NEMA 250, Type 3R.
2. Compartments: Modular; individual doors have concealed hinges and quick-captive screw fasteners. Interlocks on combination controller units require disconnect means in off position before door can be opened or closed, except by consciously operating a permissive release device.
3. Interchangeability: Compartments are constructed to remove units without opening adjacent doors, disconnecting adjacent compartments, or disturbing the operation of other units in control center. Units requiring the same size compartment are interchangeable, and compartments are constructed to permit ready rearrangement of units, such as replacing 3 single units with one unit requiring 3 spaces, without cutting or welding.
4. Wiring Spaces: Each vertical section of structure with horizontal and vertical wiring has spaces for wiring to each unit compartment in each section, with supports holding wiring in place.
5. **Controls**: As specified elsewhere herein and as indicated on the Drawings. Each magnetic starter shall be provided with a hand-off-auto selector switch and a red "on" pilot light. Control power shall be 120 volts from integral transformer(s) unless indicated otherwise on the Drawings. Control transformer insulation shall be Class H. Provide suitable primary and secondary over current protection, and ground the secondary of control transformers. The secondary grounded conductor shall be identified with continuous white insulation.

   Where external control circuits are used a disconnecting means shall be provided in the control center and identified with a red laminated plastic nameplate marked "120 volt external control". Provide each motor control unit with a wiring diagram and overload

heater chart affixed to the inside of the unit door or cover. Overload heaters shall be installed only after verification of actual motor FLA ratings.

C. Short-Circuit Current Rating for Each Section: Minimum 42,000 amps symmetrical RMS or as specified on the drawings.

2.03 BUSES

A. Material: Plated copper.

B. Ampacity Ratings: As indicated for horizontal and vertical main buses.

C. Equipment Ground Bus: Noninsulated, horizontal copper bus 2 by 1/4 inch, minimum.

D. Horizontal Bus Arrangement: Main phase, and ground buses extended with same capacity the entire length of motor-control center, with provision for future extension at both ends by bolt holes and captive bus splice sections or approved equivalent.

E. Short-Circuit Withstand Rating: Minimum 42,000 amps symmetrical rms Or as specified on the drawings.

2.04 FUNCTIONAL FEATURES

A. Description: Modular arrangement of motor controllers, control devices, overcurrent protective devices, transformers, panelboards, instruments, indicating panels, blank panels, and other items mounted in compartments of motor-control center as indicated.

B. Motor-Controller Units: Combination controller units of types and with features, ratings, and circuit assignments indicated.

1. Units with full-voltage, across-the-line, magnetic controllers up to and including Size 3 are installed on drawout mountings with connectors that automatically line up and connect with vertical-section buses while being racked into their normal, energized positions.

2. Units have short-circuit current ratings equal to or greater than short-circuit current rating of motor-control center section.

3. Units in motor-control centers with Type B wiring shall be equipped with pull-apart terminal strips or drawout terminal boards for external control connections.

C. Overcurrent Protective Devices: Types of devices with features, ratings, and circuit assignments indicated. Individual feeder-tap units through 225-A rating shall be installed on drawout mountings with connectors that automatically line up and connect with vertical-section buses while being racked into their normal, energized positions.

D. Spaces and Blank Units: Compartments fully bused and equipped with guide rails or equivalent, ready for insertion of drawout units. Provide bus barrier and compartment door.

E. Spare Units: Type, sizes, and ratings as indicated, and installed in compartments indicated "spare."

PART 3 - EXECUTION

3.01 EXAMINATION

A. Examine surfaces to receive motor control centers for compliance with installation tolerances and other conditions affecting performance of motor control centers installation. Do not proceed with installation until unsatisfactory conditions have been corrected.

3.02 APPLICATIONS

A. Select features of each motor controller to coordinate with ratings and characteristics of supply circuit and motor; required control sequence; duty cycle of motor, drive, and load; and configuration of pilot device and control circuit affecting controller functions.

B. Select horsepower rating of controllers to suit motor controlled.

C. Push-Button Stations: In covers of magnetic controllers for manually started motors where indicated, start contact connected in parallel with sealing auxiliary contact for low-voltage protection.

D. Hand-Off-Automatic Selector Switches: In covers of manual and magnetic controllers of motors started and stopped by automatic controls or interlocks with other equipment.

3.03 INSTALLATION

A. Install motor-control centers according to NEMA ICS 2.3 and manufacturer's written instructions.

B. Anchor each motor-control center assembly to steel-channel sills arranged and sized according to manufacturer's written instructions. Attach by tack welding or bolting. Level and grout sills flush with motor-control center mounting surface.

C. Install motor-control centers on concrete housekeeping bases conforming to Section 03300, "Cast-in-Place Concrete."

D. Fuses: Install fuses in each fusible switch as indicated, oriented for label readability.

3.04 IDENTIFICATION

A. Identify field-installed wiring and components and provide warning signs according to Section 16190, "Electrical Identification."

B. Operating Instructions: Frame printed operating instructions for motor-control centers, including control sequences, and emergency procedures. Fabricate frame of finished wood or metal and cover instructions with clear acrylic plastic. Mount on front of motor-control centers.

3.05 CONTROL WIRING INSTALLATION

A. Install wiring between motor-control devices according to Section 16180 - Wiring Devices.

B. Bundle, train, and support wiring in enclosures.

C. Connect hand-off-automatic switch and other automatic control devices according to an indicated wiring diagram or one that is manufacturer approved, where available.

1. Connect selector switches to bypass only the manual and automatic control devices that have no safety functions when switch is in the hand position.

2. Connect selector switches with motor-control circuit in both hand and automatic positions for safety-type control devices such as low- and high-pressure cutouts, high-temperature cutouts, and motor-overload protectors.

3.06 CONNECTIONS

A. Tighten motor-control center bus joint, electrical connector, and terminal bolts according to manufacturer's published torque-tightening values. Where manufacturer's torque values are not indicated, use those specified in UL 486A and UL 486B.

3.07 FIELD QUALITY CONTROL

A. Testing Agency: Provide services of a qualified independent testing agency to perform specified testing.

B. Testing: After installing motor-control center and after electrical circuitry has been energized, demonstrate product capability and compliance with requirements.

1. Procedures: Perform each visual and mechanical inspection and electrical test stated in NETA ATS, Sections 7.5, 7.6, and 7.16. Certify compliance with test parameters.

2. Remove and replace malfunctioning units with new units, and retest.

3.08 COMMISSIONING

A. Spot check breaker settings against Short Circuit Study. Short Circuit Study to be performed by the contractor.

B. Test the operation of the starters in Hand and Off Automatic control will generally be tested with the functional testing of the device.

C. Spot check insulation resistance on the MCC bus and control circuits.

D. Spot check voltage levels and resistance to ground.

3.09 CLEANING

A. Inspect interior and exterior of motor-control centers. Remove paint splatters and other spots, dirt, and debris. Touch up scratches and mars of finish to match original finish. Clean devices internally, using methods and materials recommended by manufacturer.

3.10 DEMONSTRATION

A. Training:

1. Conduct a minimum of 4 hours of training in operation and maintenance as specified in Division 1 Section 01770, "Project Closeout." Include training relating to equipment operation and maintenance procedures.

2. Schedule training with at least 7 days' advance notice. Deliver maintenance manuals to Owner before training commences.

END OF SECTION

THIS PAGE INTENTIONALLY LEFT BLANK

SECTION 16210
SWITCHES, DISCONNECT AND SAFETY

PART 1 - GENERAL

1.1 SCOPE

A. Work Included: Not limited to the following:

1. Fabricate, provide and install disconnect and safety type switches where indicated on the Contract Drawing and hereinafter specified.

2. Comply with General Conditions, the General Requirements and the requirements of Section 16020 of this Division 16 concerning definitions, guarantees, submittals, as-builts, clean-up, etc. as applicable to the work of this Section.

3. Examine all other Sections for work related to those Sections which are required to be included as work under this Section.

1.2 QUALITY ASSURANCE

A. Conform to applicable provisions of Subsection 1.7 of Section 16020 - Municipal Facilities General Electrical Requirements.

B. Conform to applicable Codes and NEMA, ANSI, UL and IEEE Standards, Federal Specification W-S-865.

1.3 SUBMITTALS

Conform to applicable provisions of Section 01330 of Division 1 - General Requirements and Subsection 1.6 G of Section 16020.

PART 2 - PRODUCTS

2.1 GENERAL

A. Approved Manufacturers:

1. Appleton;

2. Eaton;

3. Schneider Electric;

4. Or equal.

B. Disconnect Switches: Provide with devices enabling the switch to be locked in the open or closed positions.

C. Manual Motor Switches: Tumbler type rated 3HP, 208 Volts three phase or single phase with or without overload heaters as required to protect equipment served.

D. Externally Operable Safety Switches: To have quick-make, quick-break mechanism, capable of switching 10 times switch rating, with cover interlock to prevent opening with switch in ON position and defeat mechanism for maintenance.

E. Switches: Shall be Heavy Duty (HD) type unless otherwise indicated. Provide NEMA 1 enclosures for interior locations, NEMA 3R enclosures for exterior or wet locations, NEMA 4X 316 SS for corrosive locations and NEMA 7 for hazardous locations. Provide with number of poles, ampacity, voltage and HP rating, fusible or nonfusible as indicated.

F. Fusible Switches: Equip them with rejection clips for UL Class R fuses. Switches having a dual rating when used with dual element fuses shall have a rating so indicated.

G. 600 Amperes or Less Fuses: UL Class RKI with a minimum interrupting rating of 200,000 Amperes, Bussmann "Low-Peak Type" or equal.

PART 3 - EXECUTION

3.1 GENERAL INSTALLATION

A. Locations: Install switches, disconnects and safety where indicated on the Contract Drawings.

B. Fastenings: Securely fasten switches to structural members or unistrut support as directed by the manufacturer.

C. Manual Motor Starters: Install flush mounted for switching motors 3HP and smaller in finished areas. Install surface mounted in equipment rooms and non-finished areas. Where installed above inaccessible ceilings provide access panels.

END OF SECTION

SECTION 16280
SHORT CIRCUIT AND COORDINATION REPORT

PART 1 - GENERAL

1.01 THE REQUIREMENT

A. The CONTRACTOR shall prepare a power system analysis of short circuit calculations, and a protective device coordination study in accordance with the requirements of these Specifications and as shown.

B. The studies shall include all portions of the electrical distribution system for normal and standby power sources down to and including the (208 V) distribution system.

C. The work to be provided by the CONTRACTOR shall include short circuit, protection, harmonic, and arc-flash studies for switchboards, panelboards, generators, VFDs, and motors supplied with solid state overload and overcurrent protection devices.

1.02 RELATED WORK SPECIFIED ELSEWHERE

A. The Work of the following Sections applies to the work of this Section. Other Sections of the Specifications, not referenced below, shall also apply to the extent required for proper performance of this work.

1. Section 16570 Municipal Facilities Electrical Testing Requirements.
2. Section 16020 Municipal Facilities General Electrical Requirements.

1.03 REFERENCE SPECIFICATIONS, CODES AND STANDARDS

A. Comply with the current provisions of the following codes and standards.

1. Codes:

   LAEC City of Los Angeles Electrical Code, latest adopted edition.

2. Commercial Standards:

   ANSI/IEEE 141 Recommended Practice for Electrical Power Distribution for Industrial Plants.

   ANSI/IEEE 242 Recommended Practice for Protection and Coordination of Industrial and Commercial Power Systems.

   ANSI C 37.010 Standard Application Guide for AC High-Voltage Circuit Breakers.

   ANSI C 37.5 Calculations of Fault Currents for Application of Power Circuit Breakers.

   ANSI C-37.13 Low-Voltage AC Power Circuit Breaker (600-Volt Insulation Class)

   IEEE 519 Recommended Practices and Requirements for Harmonic Control in Electrical Power Systems.

1.04 CONTRACTOR SUBMITTALS

A. Submittals shall be made in accordance with Section 16020 - Municipal Facilities General Electrical Requirements and as specified herein.

B. The power system analysis shall be submitted to the ENGINEER prior to receiving final approval of the distribution equipment shop drawings and/or release of equipment for manufacture; approval from the ENGINEER may be obtained for a preliminary submittal of sufficient detail to ensure that device selection will be adequate. Preliminary submittal shall indicate the computer program for use in performing the work of this Section.

C. Studies for harmonic current, voltage and line notching test results shall be forwarded to the ENGINEER prior to acceptance testing of the project and subsequent to the installation of all harmonic generating and harmonic-sensitive equipment.

D. Submittals for solid state motor protective devices shall be forwarded to the engineer prior to loading the motor.

E. Final settings of Protective device shall be approved by the ENGINEER prior to project acceptance and shall be based on the results of the power system analysis.

F. The CONTRACTOR shall indicate in the submittal, changes to the protection scheme or equipment selection that will result in improved system reliability and safety.

1.05 QUALITY ASSURANCE

A. Organization's Qualifications:

1. Short circuit studies, protective device evaluation studies, and protective device coordination studies shall be performed by the medium voltage switchgear manufacturer or by an electrical testing service regularly engaged in the short circuit and protective device coordination studies for a period of at least 15 years. The study shall utilize proven computer programs for power system analysis. The studies shall be signed by the professional electrical engineer, registered in the State of California, responsible for the studies.

PART 2 - PRODUCTS

2.01 GENERAL

A. The organization of the study shall include a single-line and an impedance diagram of the power system. This diagram shall identify all components considered in the study and the ratings of all power devices (this includes, but is not limited to: transformers, circuit breakers, relays, fuses, busses, and cables). The resistance and reactance of all cables shall be identified in the impedance diagram. The study shall contain, from the service utility company, all written data regarding maximum available short circuit current, voltage, and X/R ratio of the utilities' power system.

2.02 SHORT CIRCUIT STUDY

A. The short circuit study shall be performed with the aid of a digital computer program and shall be in accordance with ANSI C 37.5, IEEE Standard 242, and IEEE Standard 141.

2.03 PROTECTIVE DEVICE EVALUATION STUDY

A. A protective device evaluation study shall be performed to determine the adequacy of circuit breakers, molded case switches, automatic transfer switches, and fuses. Any problem areas or inadequacies in the equipment due to prospective short-circuit currents shall be promptly brought to the ENGINEER's attention.

2.04 PROTECTIVE DEVICE COORDINATION STUDY

A. A protective device coordination study shall be performed to provide the necessary calculations required to select or check the selection of power fuse ratings, protective relay characteristics and settings, ratios and characteristics of associated current transformers, and low-voltage breaker trip characteristics and settings. The results of the study shall govern the final selection of the protective devices.

2.05 TIME/CURRENT COORDINATION CURVES

A. As a minimum, the time/current coordination curves for the power distribution system shall include the following on 5-cycle log-log graph paper:

1. Time/current curves for each protective relay or fuse showing graphically that the settings will provide protection and selectivity within industry standards. Each curve shall be identified, and tap and time dial settings shall be specified.
2. Time/current curves for each device shall be positioned to provide the maximum selectivity to minimize system disturbances during fault clearing.
3. Time/current curves and points for cable and equipment damage.
4. Circuit interrupting device operating and interrupting times.
5. Indicate maximum fault values on the graph.
6. Sketch of bus and breaker arrangement.
7. Magnetizing inrush points of transformers.
8. All restrictions of the ANSI and LAEC shall be adhered to and proper coordination intervals and separation of characteristics curves shall be maintained.
9. Thermal limits of motors 250 hp and above.

2.06 MOTOR PROTECTION

A. Overload protection as phase overcurrent for medium voltage motors is specified in other Sections of these Specifications to be solid-state protective modules. The CONTRACTOR shall adjust these modules with respect to actual installed motor torque, current and thermal characteristics so that the best possible motor protection will result. Protective settings shall be submitted, and approved, before respective motors are run under load.

2.07 ARC FLASH STUDY REPORT

A. Report: A comprehensive report shall be provided, signed by a Professional Electrical Engineer, Registered in the State of California. The Report shall include as a minimum:

1. Report summary with analysis methodology, findings and recommendations.
2. Summary of input data for utility source, equipment and cables.

3. Available fault current at each equipment location with comparison to equipment rating.
4. Overcurrent device settings (e.g. pick-up, time delay, curve), "as found" and "as recommended".
5. Incident energy level (calories/cm²) for each equipment location and recommended PPE.
6. Overcurrent device coordination curves including related section of the single-line diagram.
7. Complete system single-line diagram for the system analyzed.

B. Labels: based on the results of the incident energy study, the supplier shall produce and install a warning label (orange <40 cal/cm²) or danger label (red >cal/cm²) for each piece of equipment as specified in "Section A" in accordance with ANSI Z535.4-2002. The label must be readable in both indoor and outdoor environments for at least 3 years and contain the following information:

1. Arc hazard boundary (inches).
2. Working distance (inches).
3. Arc Flash incident energy at the working distance (calories/cm²).
4. PPE category and description including the glove rating.
5. Voltage rating of the equipment.
6. Limited approach distance (inches).
7. Restricted approach distance (inches).
8. Prohibited approach distance (inches).
9. Equipment/bus name.
10. Date prepared.
11. Supplier name and address.

C. Equipment Verification/Operation: The validity of the arc-flash study and incident energy readings is in part based on proper setting of overcurrent device trip times and the proper operation of the overcurrent devices and breakers themselves. The CONTRACTOR shall verify proper operation of overcurrent devices and breakers using National Electrical Testing Association (NETA) qualified technicians.

The technician shall be capable of adjustment, maintenance, repair or replacement of overcurrent devices or breakers as required to support the performance of the electrical system in line with the expectations of the system study.

D. Safety Training: The CONTRACTOR shall provide the City with one day of arc-flash safety training that contains the requirements referenced in OSHA 1910.269, OSHA 1910 Subpart S and NFPA 70E. This shall include:

1. Proper use of the system analysis data.
2. Interpretation of hazard labels.
3. Selection and utilization of personal protective equipment (PPE).
4. Safe work practices and procedures.

The supplier shall provide the City an outline of the one day training course including training materials. The City at its discretion may require additional training customized to its specific needs.

The supplier shall be capable of developing and presenting customized training for approval as required.

The supplier shall provide a training certificate to record satisfactory completion by the city employees for continuing education credits and re-licensing requirements. Satisfactory completion is defined as the student obtaining a minimum of 70% on the post-training examination and the ability to work safely if a hands on performance evaluation is provided.

E. Safety Documentation/Policy: The CONTRACTOR shall integrate the results of the system study and design review into the safety manual of the City in compliance with OSHA CFR 29 1910.333. The CONTRACTOR shall assist the City to develop a safety policy with corresponding documentation and procedures including information gained in the system analysis. This includes electrical safety, procedures for mitigation of arc hazards, PPE selection based on specific equipment, task and training requirements.

PART 3 - EXECUTION

3.01 PROTECTIVE DEVICE TESTING, CALIBRATION AND ADJUSTMENT

A. The CONTRACTOR shall provide the services of a qualified field engineer and necessary tools and equipment to test, calibrate, and adjust the protective relays and circuit breaker trip devices as recommended in the power system analysis. The qualifications of the field engineer shall be subject to review and approval by the ENGINEER.

3.02 STUDY REPORTS

A. The results of the power system analysis shall be submitted summarized in a final report. The report shall include, but not limited to the following:

1. Single-line diagram.
2. Impedance diagram.
3. Tabulation of all protective devices, which shall be identified on the single-line diagram.
4. Time/current coordination curves.
5. Computerized fault current calculations.
6. Specific recommendations, if any.
7. Test instrumentation, condition and connections, as applicable, for each study.
8. Arc-Flash Study.

END OF SECTION

THIS PAGE INTENTIONALLY LEFT BLANK

SECTION 16290
MUNICIPAL FACILITIES GROUNDING SYSTEMS

PART 1 - GENERAL

1.1 SCOPE

A. Required: Provide and ground electrical systems completely and effectively as required by Code and herein specified.

B. Comply with the General Conditions, General Requirements and the requirements of Section 16020 of this Division 16 concerning definitions, guarantees, submittals, as-builts, clean-up, etc. as applicable to work of this Section.

1.2 SUBMITTALS

A. General: Submit each item in this article according to the conditions of the Contract and Division 1 Specifications 01330.

B. Product Data for grounding rods, connectors and connection materials, and grounding fittings.

C. Field tests and observation reports certified by the testing organization and indicating and interpreting the test reports for compliance with performance requirements.

1.3 RELATED WORK

A. Related Sections: The following sections contain requirements that relate to this section:

1. Section 16560 "Municipal Facilities Electrical Commissioning Requirements" for commissioning requirements.

2. Section 16570 "Municipal Facilities Electrical Testing Requirements" for testing requirements.

1.4 QUALITY ASSURANCE:

A. Testing Agency Qualifications: A "National Recognized Testing Laboratory" (NRTL) As defined in OSHA Regulation 1910.7.

B. Comply with NFPA 70.

C. Comply with UL 467.

D. Listing and Labeling: Provide products specified in this Section that are listed and labeled.

1. The Terms "Listed" and "Labeled": As defined in the National Electrical Code Article 100.

2. Listing and Labeling Agency Qualifications: A "Nationally Recognized Testing Laboratory" (NRTL) as defined in OSHA Regulation 1910.7.

1.5 REFERENCE STANDARDS

A. NFPA 70: National Electrical Code - Article 250.

B. Federal Information Processing Standard Publication #94 "Guideline on Electrical Power for ADP Installations".

C. IEE Std. 142-1982 "Grounding of Industrial and Commercial Power System (GREEN Book).

D. IEE Std. 1100-1992 "Powering and Grounding Sensitive Electronic Equipment" (Emerald Book).

1.6 SYSTEM DESCRIPTION

A. Ground the electrical service system neutral at service entrance equipment to metallic water service and to concrete encased grounding electrodes.

B. Ground each separately-derived system neutral to nearest effectively grounded metallic water pipe.

C. Provide telephone and data system grounding conductor at main terminals of respective system bonded to service entrance grounding electrode.

D. Bond together system neutrals, service equipment enclosures, exposed non-current carrying metal parts of electrical equipment, metal raceway systems, grounding conductor in raceways and cables, receptacle ground connectors, metallic plumbing systems and concrete encased electrode.

PART 2 - PRODUCTS

2.1 MATERIALS

A. Grounding and Bonding Conductors: Soft-drawn stranded copper.

B. Buried or Concealed Joints: Exothermic welded, inspected and approved the Los Angeles City Building Department before concealment.

C. System grounding conductors shall be a minimum of #3 AWG unless otherwise indicated, and shall be continuous without joints or splices.

D. Bolted Connections: Everdur hardware, bolts, and lock washers or equal.

E. Welded Connections: Either Erico Cadweld Process or Continental Industries Thermoweld Process or equal.

F. Compression Connections: Thomas & Betts Series 5300 fittings or equal. Use manufacturer's specific instructions and tools for each connection.

G. Ground Rods: Copperweld Steel Company or equal. Provide 3/4 inch copperclad steel driven ground rods, 10 feet long, UL listed, in each manhole and where indicated on Contract Drawings.

PART 3 - EXECUTION

3.1 GENERAL INSTALLATION

A. Grounding and Bonding: Provide in accordance with all requirements of NEC and other applicable codes, Contract Drawings and the following descriptions. Comply with the codes as a minimum requirement with specifications where they are more stringent. Ground each electrical service to cold water systems and provide supplemental grounding as follows:

1. Structural Steel Electrode: Bond the structural steel frame of the building or structure to the point of ground at service equipment with a continuous bonding conductor equal in size to the grounding electrode conductor, but not smaller than No. 4 AWG or:

2. Concrete-Encased Electrode: Provide three minimum No. 4 horizontal reinforcing bars in and near the bottom of the building or structure footing, each with a minimum continuous (no splices) length of 20 feet. Install a continuous bonding conductor equal in size to the grounding electrode conductors, but not smaller than No. 4 A.W.G., bonded to each reinforcing bar by means of corrosion-resistant clamps or welding, to the point of ground at service equipment. The bonding conductor shall be installed in schedule 40 rigid PVC conduit from a point within the footing continuous to the service equipment. A single size 3/0 bare copper conductor with a minimum continuous length of 20 feet may be used in lieu of the three No. 4 reinforcing bars.

B. Separate Buildings or Structures: When two or more buildings or structures are supplied from a common source or service, the grounding system in each building or structure shall have a grounding electrode connected to the metal enclosure of the building or structure disconnecting means and to the AC system grounded circuit conductor on the supply of the building or structure disconnecting means.

C. Separately Derived Systems: Shall be bonded and grounded in accordance with Code.

D. Customer-Station Transformer: Shall be bonded and grounded in accordance with the requirements of the serving electric utility.

E. Nonmetallic Raceways: A Code-sized green, or green with yellow stripe insulated conductor shall be installed with the circuit conductors, for equipment grounding. Ground conductor shall be installed in raceways with branch circuit wiring where indicated on the Contract Drawings.

F. Communication, Sound, and Signal Systems: Metal raceways and enclosures shall be grounded as directed by the City Engineer.

G. The interior metallic cold water pipe system shall be bonded to the main grounding electrode by a conductor sized in accordance with Code, but not smaller than No. 8 A.W.G.

H. Telephone service main backboard or cabinet shall be grounded in accordance with requirements of the telephone serving facility.

I. All grounding and bonding conductors shall be installed with sufficient slack to avoid breaking due to settlement and movement of conductors at attached points.

J. Flexible Conduit: Where equipment grounding or bonding conductors are required they shall be installed inside the conduit except bonding conductors may be installed exterior of the conduit if not over 3 feet maximum length, not smaller than No. 8 A.W.G., and if secured to

the conduit at 6 inch. Flexible conduit not to be used as a ground path. Include code size green conductors in all flexible conduit.

K. Transformers and other isolated neutrals shall be grounded from the neutral bushing or connector to grounding electrodes, building steel or metallic code water pipe system.

L. All conduit stub-ups shall be grounded and where multiple stub-ups are made within an equipment enclosure such as a switchboard, they shall be equipped with grounding bushings and bonded together to the enclosure, and the enclosure ground bus with code sized copper conductors.

M. Metallic conduits, wireways, metal enclosures of busways, electrical equipment housing and all non-current carrying metallic parts shall be grounded. The metallic conduit system shall be used for equipment and enclosure grounding but not as a system ground conductor.

3.2 MEASUREMENT OF RESISTANCE TO GROUND

A. All Systems**:** Measure by the "direct" method or the "Fall of Potential" method. The "direct" method, or two terminal test, includes a Megger Earth Tester with terminals connected to the electrode under test and to an all metallic water pipe system. The following limitations apply to this method:

1. The water pipe system must be extensive enough to have a negligible resistance.

2. The water pipe system must be metallic throughout, without any insulating couplings or flanges.

3. The earth electrode under test must be far enough away from the water pipe system to be outside its sphere of influence. Rule of thumb: Distance from the earth-electrode system to the water pipe system should be about 10 times the radius of the electrode or grid to obtain a measurement within an accuracy of p 10%.

4. Submit test report of the main building grounding electrode's resistance to ground to the City Engineer.

B. Test each receptacle or branch circuit breaker having ground-fault circuit protection to assure that the ground-fault circuit interrupter will not operate when subjected to a ground-fault current of less than 4 milliamperes and will operate when subjected to a ground-fault current exceeding 6 milliamperes. Perform testing using an instrument specifically designed and manufactured for testing ground-fault circuit interrupters. "TEST" button operation will not be acceptable as a substitute for this test. Replace receptacles that do not shutoff power with 5/1000 of an ampere within 1/40th of a second and retest. Submit test report signed by Test Engineer who performed this test.

END OF SECTION

SECTION 16310
VARIABLE FREQUENCY DRIVE UNITS

PART 1 - GENERAL

1.1 THE REQUIREMENT

A. General: The CONTRACTOR shall furnish and install all variable frequency drive (VFD) units shown and specified, complete with necessary accessories and controls, to provide a complete and workable system, in accordance with the requirements of the Contract Documents.

B. Scope of Work: The variable frequency drive units shall be integrated, all solid state systems, designed to operate at 460 volt ac, 3-phase, 60 hz, in an ambient temperature of 40 degrees C. The variable speed control system supplied shall match the torque requirements of the pump load and control the speed of the driven equipment motor with a 1.0 service factor, without derating and without requiring any motor modifications.

C. Refer to the drawings for control, monitoring and interlocking requirements.

D. Coordination: The equipment furnished under this Section shall be required to operate the electric motor with the driven equipment, as furnished under the equipment Specification. The CONTRACTOR'S attention is specifically directed to the need for proper coordination of the work under this Section, and the work under the equipment Section, with the work under Division 17 Instrumentation and Control, and Section 16490 Electric Motors. The CONTRACTOR shall investigate, field verify and confirm in the submittal drawings the existing PLC input and output signals, and shall fully identify the signals on the VFD schematics.

E. System Requirements:

1. The VFD system shall include filters to mitigate the current and voltage harmonics at the point of common connection. The harmonics not to exceed those specified in IEEE-519 "Recommended Practice and Requirements for Harmonic Control in Electrical Power Systems". The point of common connection is 480V MCC bus immediately upstream of the VFD.
2. Acceptable mitigation approaches include:

    a. 18 pulse VFD.

3. The Contractor to include a preliminary harmonic study at the time the VFD submittal is made, showing how the VFD system proposed meets the IEEE 519 harmonic requirements. See Section 16280 "Short Circuit and Coordination" for the study requirements. The study to include calculations.

1.2 RELATED WORK SPECIFIED ELSEWHERE

A. Section 16170 "Cabinets and Enclosures".

B. Section 16280 "Short Circuit and Coordination".

C. Section 16340 "Low Voltage Motor Control".

1.3 REFERENCE SPECIFICATIONS, CODES AND STANDARDS

A. IEEE 519, Recommended Practices and Requirements for Harmonic Control in Electrical Power Systems.

1.4 REFERENCE SPECIFICATIONS, CODES AND STANDARDS

A. Comply with the applicable reference specifications as specified in the GENERAL REQUIREMENTS.

1.5 CONTRACTOR SUBMITTALS

A. Submittals shall be made in accordance with the GENERAL REQUIREMENTS.

B. The CONTRACTOR shall submit complete information, drawings, and technical data for all the equipment as follows:

1. Manufacturer's statement accepting two years warranty responsibility.
2. Any exception to this Specification, along with justification for each exception. All items shall be in bold letters and underlined.
3. Catalog cuts and catalog data.
4. Written descriptions explaining ladder diagram operation, system operation, and analog signal processing.
5. System block diagram.
6. Enclosure outline.
7. Factory test data certifying compliance of similar equipment of this manufacturer with this Specification.
8. System schematic diagrams and Interconnection diagrams.
9. All equipment and work shall comply with the latest applicable standards of ANSI, NEMA, IEEE, and the National Electric Code.
10. Seismic Requirements: Design certifications and anchorage sketches, as required in Section 11000 Equipment General Provision.
11. The shop drawing submittal shall include the following specific information:

    a. Name of drive manufacturer.
    b. Type and model.
    c. Assembly drawing and nomenclature.
    d. Temperature rise and class of insulation.
    e. Maximum heat dissipation capacity in horsepower.
    f. Normal field excitation at full load.
    g. Percent slip of unit at maximum output speed when transmitting a load equal to nameplate rating of driving motor with normal field excitation applied to unit as well as guaranteed overall efficiency for same load condition.

12. Electrical harmonics study with calculations demonstrating conformance with IEEE-519 harmonic requirements. The Manufacturer shall be responsible for gathering the data for on-site components necessary for analysis. Study contents shall include computer printouts showing current and voltage harmonic content up to the fiftieth harmonic individually and the combined total.
13. Results of harmonic acceptance test showing the completed system complies with the harmonic requirements of IEEE-519.

14. Operations and maintenance manuals. Manuals shall be prepared specifically for this installation, and include "as-built" drawings, equipment list, drive configuration instructions, site configuration settings, operating and troubleshooting guides.

C. Spare Parts: The CONTRACTOR shall obtain and submit from the manufacturer a list of suggested spare parts for each piece of equipment according to the provisions of SPARE PARTS of the GENERAL REQUIREMENTS. After approval, CONTRACTOR shall furnish such spare parts suitably packaged, identified with the equipment number, and labeled. CONTRACTOR shall also furnish the name, address, and telephone number of the nearest distributor for each piece of equipment. All spare parts are intended for use by the CITY, only, after expiration of the guaranty period. Any spare parts which the ENGINEER permits the CONTRACTOR to use for startup activities shall be replaced by the CONTRACTOR prior to the CITY's partial acceptance of beneficial use of the equipment.

1. During the term of this Contract the CONTRACTOR shall notify the ENGINEER in writing about any manufacturer's modification of the approved spare parts, such as part number, interchangeability, model change or others. If the ENGINEER determines that the modified parts are no longer applicable to the supplied equipment, the CONTRACTOR at its expense shall provide applicable spare parts.
2. At a minimum, the following spare parts shall be furnished to the CITY at the job site:

    a. One set of 3 spare fuses of each size.
    b. Two spare lamp lenses of each color.
    c. Two dozen pilot lamps.
    d. One spare VFD.
    e. Set of tools required for maintenance of VFD units.

1.6 QUALITY ASSURANCE

A. Manufacturer's Qualifications: It is the intent of this Specification to provide a complete, reliable, fully tested, adjustable speed drive system suitable for manned or unmanned operation. The CONTRACTOR shall cause the equipment to be furnished under this Section to be the product of a firm regularly engaged in the design and manufacture of this type of item for a period of at least ten years, and possessing sufficient technical competence, skill, resources, and ability to complete the work specified under this Section with the requisite degree of quality in a timely and efficient manner. The CONTRACTOR shall cause the equipment specified herein to be designed and furnished by a single adjustable frequency drive manufacturer. This provision, however, shall not be construed as relieving the CONTRACTOR of its overall responsibility for this portion of the work.

1.7 PREQUALIFICATION REQUIREMENTS

A. All potential variable frequency drive (VFD) subcontractors shall qualify for bidding by applying in writing to the ENGINEER at least 21 days prior to the bid opening date. Each applicant for prequalification will be evaluated based on ability to meet the following minimum criteria:

1. Provide a list of at least five projects successfully completed in which the VFD subcontractor performed system engineering, including harmonic filter calculations, system fabrication and installation, documentation (including schematic, wiring and panel assembly drawings), field testing, calibration and startup, operator instruction, and maintenance training. In addition, list the following information for each project:

    a. Name of plant, owner, contact name, and telephone number.

b. Name of manufacturer for the speed controller furnished.
c. Type of equipment furnished (i.e., voltage source, current source, pulse width, diode rectifier, etc.).

2. Name the individual person who will be responsible for office engineering and management of this project, and the individual who will be responsible for field testing, calibration, start-up and operator training. Include references of recent projects of these individuals.
3. Provide a letter attesting that these persons in charge have read and studied the contract specifications and drawings and agreed that all features required in the contract specifications and drawings are workable and can be manufactured.
4. Document that the VFD subcontractor's company has been actively involved in the VFD system business (under the same corporate name) for a minimum of ten years.

B. Notification: Each application will be thoroughly examined, investigated, and then judged as to the competency and willingness to execute the scope of work required on this project. Each applicant will be notified within 10 days prior to the bid opening date, as to his approval or disapproval for qualification.

C. Certification by Variable Frequency Drive System Subcontractor: At the time of quoting to prospective contractors prior to bid opening, the prospective VFD subcontractor shall execute and submit a written certification of intent to assume full responsibility for the complete requirements of the Contract Documents. A signed copy thereof shall be supplied to each prospective contractor for inclusion with the bidding documents. Failure by a bidding VFD system supplier to provide this written certification shall be treated by the prospective contractor as NO BID and that VFD subcontractor will not be acceptable. Each prospective contractor shall include with its proposal the certification, required above, only for the VFD subcontractor for whom they have inserted a price in the bidding documents. The certification shall be on the named VFD subcontractor's letterhead, it shall be signed by his authorized responsible representative, and it shall include the following statements:

1. Corporate name of variable frequency drive system subcontractor) hereby certifies intent to assume and execute full responsibility to select, furnish, install, connect, test, calibrate, and place into operation all specified speed controllers, control boards, and all assemblies, components, and accessories needed to place into service complete operating VFD's, and control systems, all in full compliance with the requirements of the Contract Documents.
2. In addition, it is certified that drawings and data will be prepared and submitted, specified field service will be performed by qualified personnel, the CITY's operating and maintenance personnel will be instructed, and technical manuals will be prepared and submitted.
3. Finally, it is certified that the quotation offered provides for full and complete compliance with the requirements of the Contract Documents without exception.

PART 2 - PRODUCTS

2.1 GENERAL REQUIREMENTS

A. Components: The adjustable frequency drive system shall consist of a converter, inverter, programmable controller, and main breaker, as follows:

1. The molded case circuit breaker shall be sized to provide a minimum short circuit interrupting capacity of 42,000 symmetrical amps or above the available short circuit

current indicated on the CONTRACT DRAWINGS, whichever is greater. The input breaker shall be mechanically interlocked with the power unit enclosure door.

2. Converter section consisting of a three-phase full wave phase controlled rectifier to convert incoming ac power to variable voltage dc. Active front end architecture to reduce harmonic distortion is acceptable.
3. DC bus capacitors and/or inductors necessary to filter rectification ripple.
4. Three-phase full wave inverter to construct an ac wave form, with minimum harmonic content, at any frequency between zero and 60 Hz to control motor speed. Motor terminal voltage shall be controlled in proportion to output frequency such that the voltage to frequency ratio remains essentially constant.
5. All electrical components shall be sized for continuous operation of the driven equipment or pump motors specified herein at 15 percent above rated full load. The minimum VFD efficiency shall be 95 percent at 100 percent speed and 85 percent at 50 percent speed. The power factor of VFD unit shall be 92 percent minimum at100 percent speed without using any power factor correction capacitor. If capacitors are deemed absolutely necessary, tuning reactors shall be provided to eliminate surges which are harmful to the drive system.
6. Provide a line and load reactor for the Variable Frequency Drive (VFD) as required to reduce voltage spikes and protect the motor from high-frequency noise. The contractor must coordinate with the VFD manufacturer to select and install a load reactor that matches the motor current rating and distance requirements.
7. Short circuit rating: Meeting the requirements of the short circuit study required under Section 16280 "Short Circuit and Coordination", or as shown on the drawings, whichever is greater.

B. Performance: The VFD shall vary both the ac voltage and frequency simultaneously to provide the constant volt/Hz necessary to operate the ac motor at the desired variable speed. The VFD shall be specifically designed for use with variable torque equipment or pumping loads, fully capable of at least a 3:1 infinitely adjustable speed range. The control shall vary the output frequency between 20 and 60 Hz. Soft-start control circuitry shall limit inrush current, not to exceed 100 percent of motor full load current, under all manual and automatic operating conditions. When power outage occurs, the drive system shall shut down in an orderly manner. Upon restoration of ac power, the motor shall restart sequentially and run at a rate depending upon the reference requirements, by the sequencing logic controller.

C. Protection: The VFD controller shall be provided with integral circuitry capable of protecting itself and the connected motors against the following conditions. Amber lights are to be provided for each of the following faults:

1. Input line monitor to protect against single phasing, power outages, and reverse phase rotation.
2. Undervoltage - restart upon restoration of normal voltage. Motor overvoltage.
3. Instantaneous over-current trip to continuously monitor peak current at output and input. It shall provide instantaneous shutdown without fuse failure to protect the machine and drive during adverse starting and running conditions.
4. Inverter fault shutdown circuit. Short-circuit protection without isolation transformer.
5. Thermal overload protection for FVNR starter.
6. Logic power supply failure.
7. Over temperature: Thermal detectors mounted on semiconductor heat sinks shall detect high temperature caused by excessive current or loss of cooling air and cause controller shutdown.

8. Over frequency.
9. Phase-to-phase ground faults without the need for isolation transformer.

2.2 VFD INTERFACE

A. The variable speed drive shall include the following inputs/outputs and communication interfaces as a minimum:

1. Remote4 4-20 mA speed reference isolated input.
2. Motor start/stop remote dry contact inputs.
3. Motor winding over-temperature alarm inputs.
4. Pump speed 4-20 mA output.
5. Drive alarm and status dry contact outputs, as shown on drawings.
6. Door mounted English character, alphanumeric display indicating:

    a. Total RMS load current.
    b. Output voltage.
    c. Load harmonic current and voltages.
    d. Fault conditions.

7. Network: Ethernet/IP communications interface.
8. Other interface signals as shown on the Drawings.

2.3 ENCLOSURE

A. Provide NEMA 3R dead-front cabinets where located outside.

B. Provide NEMA 12 for cabinets located inside an electrical building. Front access only.

C. Enclosures integral with the MCC, as indicated on the drawings.

2.4 VFD MANUFACTURERS

A. Eaton.

B. Siemens.

C. Schneider.

D. Or equal.

2.5 COMMON ACTIVE HARMONIC FILTER

A. Where proposed by the VFD manufacturer, provide a common Active Harmonic Filter meeting the following requirements:

1. Inject harmonic currents such that the upstream harmonic currents and voltages are reduced 5% TDD and 5% TDH(V) respectively at the point of common coupling.
2. Rated 3 phase, 480 VAC, 60 Hz. AIC rating matching the associated MCC.
3. Reactive current compensation: Maintain a power factor setpoint of 0.95 lagging.

4. Operator alphanumeric display, indicating:

    a. Line voltage and total RMS current.
    b. Harmonic current and voltage.
    c. Reactive current and power factor.
    d. Fault indication.

PART 3 - EXECUTION

3.1 INSTALLATION

A. All equipment furnished hereunder shall be installed and aligned under the supervision of a factory-trained service engineer.

B. Conduit stub-ups for interconnected cables and remote cables shall be located and terminated in accordance with the drive manufacturer's recommendations.

C. The CONTRACTOR shall have the manufacturer examine/investigate the Contract Documents as to the operating environment that the adjustable frequency drive will be subjected to, and advise the ENGINEER prior to bidding of any potential problems, which could prevent the drive from functioning as intended, and its recommendations for correcting/preventing expected problems.

D. The CONTRACTOR shall include in the bid a minimum of three 8-hour days of a qualified manufacturer's service engineer's time. This time will be used to ensure proper connection and functioning of the equipment prior to startup and to train CITY personnel in the use of the equipment.

3.2 FIELD TESTING

A. The variable speed drive system test shall be completed at the manufacturer's plant under simulated conditions at the load range expected. All level points shall be programmed and the system runs with motors of similar characteristics.

B. Testing, checkout, and startup of the variable frequency drive and FVNR starter equipment in the field shall be performed under the technical direction of the manufacturer's service engineer. Under no circumstances are any portions of the drive system to be energized without authorization from the manufacturer's representative.

C. The CONTRACTOR shall instruct the manufacturer of the drive to provide the services of a competent engineer to assist in placing the equipment into operation and provide instruction as required to the equipment operating personnel.

D. The Contractor shall perform a witnessed harmonics acceptance with all VFDs operating, to verify compliance with IEEE-519 limits at the point of common connection (MCC). The results to be documented and submitted to the Engineer.

3.3 TRAINING

A. Provide two on-site training sessions, each a minimum of 2 hours, covering the VFDs operation and configuration. Session 1 for operations staff, and session 2 for maintenance staff. Training by Generator Manufacturer or his representative, and to include instructional documentation.

END OF SECTION

SECTION 16330
PANELBOARDS

PART 1 - GENERAL

1.1 SCOPE

A. Required: Provide and install complete equipment including circuit breakers and panelboards as indicated on the Contract Drawings and herein specified.

B. Comply with the General Conditions, General Requirements and the requirements of Section 16020 of this Division 16 concerning definitions, guarantees, submittals, as-builts, clean-up, etc. as applicable to work of this Section.

1.2 RELATED WORK

A. Related Sections: The following sections contain requirements that relate to this section:

1. Section 16560 " Municipal Facilities Electrical Commissioning Requirements " for commissioning requirements.

2. Section 16570 " Municipal Facilities Electrical Testing Requirements" for testing requirements.

1.3 QUALITY ASSURANCE

A. Comply with applicable provisions of Subsection 1.2 of Section 16020.

B. Conform to the applicable provisions of Subsection 1.6 of Section 16020 related to legal requirements and standards including NEMA, ANSI and IEEE Standards, NFPA 70, and Federal Specifications.

1.4 SUBMITTALS

A. Submit under the provisions of Section 01330.

B. Product Data: For each type of panelboard, overcurrent protective device, accessory, and component indicated. Include dimensions and manufacturers' technical data on features, performance, electrical characteristics, ratings, and finishes.

C. Maintenance Data: For panelboards and components to include in maintenance manuals specified in Division 1. In addition to requirements specified in Section 01770, "Closeout Procedures," include the following:

1. Manufacturer's written instructions for testing and adjusting overcurrent protective devices.

2. Time-current curves, including selectable ranges for each type of overcurrent protective device.

PART 2 - PRODUCTS

2.1 GENERAL REQUIREMENTS

A. Cabinets to House Panelboards: Cabinets shall be formed of galvanized metal, chemically cleaned, and all breaks in galvanizing shall be painted with metallic aluminum paint.

Minimum size: 20 inches wide by 5-3/4 inches deep. Trims and doors shall be chemically cleaned. Provide ANSI synthetic alkalyd factory enamel finish on the exterior and interior of panels. Provide for circuit directory behind door with glass or heavy plastic protection. Cabinets shall be flush or surface mounted type as indicated with screw cover, hinged doors with flush lock keyed to operate from one key. Cabinets greater than three feet shall have three trim bolts on each side.

B. Identification: Each panelboard shall have an exterior engraved laminated plastic nameplate identifying the panelboard and indicating voltage, phases, and number of system conductors. For example:

"Panel A 277/480V. 3ph, 4W". Lettering shall be white on black finish and 3/16 inch high minimum. Nameplates shall be affixed with a minimum of two escutcheon pins or screws. Each circuit breaker shall have a permanent metal or plastic number to identify each circuit. A circuit schedule card and holder shall be mounted on the inside of the door and covered with plastic.

C. Protective Devices:

1. Protective devices, main, branch or sub-feed shall be thermal-magnetic-molded-case circuit breakers, bolt-on type ampacities as scheduled on Drawings. Provide single handle, common trip for two and three-pole units. Handle ties are not acceptable.

2. Circuit Breakers, 250A and Larger: Adjustable magnetic trip setting.

3. Electronic Circuit Breakers, 400A and Larger: RMS sensing; field-replaceable rating plug; with the following field-adjustable settings:

   a. Instantaneous trip.

   b. Long- and short-time pickup levels.

   c. Long- and short-time time adjustments.

   d. Ground-fault pickup level, time delay, and I^2t response. Where indicated on the drawings.

4. GFCI Circuit Breakers: Single- and two-pole configurations with 5-mA trip sensitivity, where indicated on the lighting and appliance panelboards.

5. Molded-case circuit breakers shall be suitable for application; Rype SWD for switching fluorescent lighting loads; Type HACR for heating, air-conditioning, and refrigerating equipment.

D. Electrical Equipment Adjacent to Panelboards: Where scheduled provide a separate cabinet with screw cover and hinged door with flush lock keyed alike with panelboard. A single cabinet may be used when a compartment (with appropriate barriers) under separate lockable door and cover is provided.

2.2 DISTRIBUTION PANELBOARDS

A. Each distribution panelboard shall be a deadfront, deadrear, U.L. listed, circuit breaker type with copper buses and comply with Federal Specification W-P-115a. Construction shall be NEMA Class I. Electrical ratings shall be as indicated on the Drawings.

Series-connected or "integrated equipment" short circuit ratings shall not be applied in lieu of, or to comply with, short circuit and interrupting capacity ratings indicated on the Drawings unless specifically approved by the City Engineer. Provide fronts with flush cylinder tumbler locks, trim clamps, and concealed hinges.

Double doors or doors over 48 inches high shall have 3 point latching. Provide 2 keys for each panelboard. Furnish panelboards with main lugs or main circuit breakers and all other circuit breakers as indicated on the drawings. Each circuit breaker shall be provided with a means for individual padlocking. Distribution panelboards shall be Square D. Co. I-line type or equal.

2.3 LIGHTING AND APPLIANCE PANELBOARDS

A. Each lighting and appliance panelboard shall be a U.L. listed circuit breaker type with copper buses and meet Federal Spec. W-P115a. Electrical ratings shall be as indicated on the Drawings. Series connected or "integrated equipment" ratings shall not be applied in lieu of or to comply with short circuit and interrupting ratings indicated on the Drawings, unless specifically approved by the City Engineer. Provide fronts with flush cylinder tumbler locks, trim clamps, and concealed hinges. Provide two keys for each panelboard. Furnish panelboards with main lugs or main circuit breakers and all circuit breakers as indicated on the Drawings.

B. Each circuit breaker shall be provided with a means for individual padlocking. Lighting and appliance panelboards shall be Square D. Co. Type NQO for 120/240 or 208/120 volt systems, and Type NEHB for 480/277 volt systems.

2.4 FABRICATION AND FEATURES

A. Hinged Front Cover: Entire front trim hinged to box and with standard door within hinged trim cover.

B. Directory Card: With transparent protective cover, mounted inside metal frame, inside panelboard door.

C. Bus: Hard-drawn copper, 98 percent conductivity or Tin-plated aluminum.

D. Main and Neutral Lugs: Mechanical type suitable for use with conductor material.

E. Equipment Ground Bus: Adequate for feeder and branch-circuit equipment ground conductors; bonded to box.

F. Future Devices: Mounting brackets, bus connections, and necessary appurtenances required for future installation of devices.

G. Isolated Equipment Ground Bus: Adequate for branch-circuit equipment ground conductors; insulated from box.

H. Extra-Capacity Neutral Bus: Neutral bus rated 200 percent of phase bus and UL listed as suitable for nonlinear loads.

I. Skirt for Surface-Mounted Panelboards: Same gage and finish as panelboard front with flanges for attachment to panelboard, wall, and ceiling or floor. Provide back, sides and removable front.

J. Feed-through Lugs: Mechanical type suitable for use with conductor material. Locate at opposite end of bus from incoming lugs or main device.

PART 3 - EXECUTION

3.1 GENERAL INSTALLATION OF PANELBOARDS

A. Install equipment square, level and secure to the building structure by bolting.

B. Align top of adjacent panelboards unless specifically noted otherwise. Install panelboards over 29 inches high to mount highest protective device handle a maximum of 6'-6" or 5'-6" for panelboards up to 29 inches high, except where adjacent to taller panelboards.

C. Flush enclosures shall be installed with the front edge flush with combustible finish surfaces and not more than 1/4 inch behind noncombustible finish surfaces, and shall be secured to framing or blocking except where embedded in masonry or concrete.

D. Provide weather-proof gaskets on trims and doors of panelboards located in mechanical areas.

3.2 OTHER APPLICABLE REQUIREMENTS

A. Provide a typewritten circuit directory for each branch circuit. Obtain City facility room numbers and use in final directory.

B. Provide a schematic diagram and sequence of operation for control devices installed under separate door adjacent to panelboards.

C. Install nameplates in accordance with provisions noted in Section 16190 - Electrical Identification.

D. Equip each circuit breaker for electrical discharge lamps with a locking device unless circuit will be switched at panelboard. Equip each circuit breaker for night-light circuits, fire alarm, security and control circuits with a locking device.

E. Provide filler plates for all unused spaces.

F. Stub five 3/4-inch empty conduits from each flush mounted panelboard into accessible ceiling space and cap for future use. Stub four 1-inch empty conduits into raised floor space or below slab not on grade.

G. Wiring in Panelboard Gutters: Arrange conductors into groups and bundle and wrap with wire ties after completing load balancing.

3.3 COMMISSIONING

A. Spot check breaker settings against Short Circuit Study.

B. Spot check phase balance after system is under load. Ensure proper, thorough and accurate identification of load. Trip breakers and validate load identified. Test GFI breakers.

C. Receptacle Polarity Test: Spot check receptacles installed or reconnected under this contract with a receptacle circuit tester. Tester shall test for open ground, reverse polarity, open hot, open neutral, hot and ground reversed, hot or neutral and hot open.

D. Check circuit labeling by de-energizing circuits while circuit tester is in the receptacle. Labeling shall be checked on the load/receptacle and at the breaker.

3.4 CLEANING

A. On completion of installation, inspect interior and exterior of panelboards. Remove paint splatters and other spots. Vacuum dirt and debris; do not use compressed air to assist in cleaning. Repair exposed surfaces to match original finish.

END OF SECTION

THIS PAGE INTENTIONALLY LEFT BLANK

SECTION 16340
LOW VOLTAGE MOTOR CONTROL

PART 1 - GENERAL

1.01 THE REQUIREMENT

A. The CONTRACTOR shall furnish and install all group-mounted and unit motor control as required for each motor furnished for installation all in accordance with the requirements of the Contract Documents.

B. When motors furnished differ from the indicated, the CONTRACTOR shall, at no additional cost to the CITY, make the necessary adjustments to wiring, conduit, disconnect devices, motor starters, branch circuit protection, and other affected material or equipment to accommodate the motors actually installed.

C. Make like items of equipment provided hereunder the end products of one manufacturer in order to achieve standardization for appearance, operation, maintenance, spare parts, and manufacturer's service.

1.02 RELATED WORK SPECIFIED ELSEWHERE

A. The work of the following Divisions or Sections applies to the work of this Section. Other Sections of the Specifications, not referenced below, shall also apply to the extent required for proper performance of this work.

1. Section 16100 Basic Materials and Methods.
2. Section 16490 Electric Motors.
3. Section 16310 Variable Frequency Drive Units.

1.03 REFERENCE SPECIFICATIONS, CODES, AND STANDARDS

A. All work specified herein shall conform to or exceed the applicable requirements of the referenced portions of the following publications to the extent that the provisions thereof are not in conflict with other provisions of these specifications.

1. Codes and Standards:

LAEC	City of Los Angeles Electrical Code, latest adopted edition.
California Code of Regulations	Title 8, Industrial Relations, Subchapter 5, Electrical Safety Orders.

2. Commercial Standards:

UL 845	Standards for Safety Electric Motor Control Centers.
NEMA	ICS-1 General Standard for Industrial Control and Systems.
NEMS	ICS-2 Industrial Control Devices, Controllers and Assemblies.

1.04 CONTRACTOR SUBMITTALS

A. Shop drawing submittals shall comply with the "Contractor Submittals" paragraph of Section 16020, "Municipal Facilities General Electrical Requirements".

B. Final submittal shall include spare parts lists, catalog data for various motor control elements in addition to the submittals required by Section 16020 "Municipal Facilities General Electrical Requirements".

C. The following submittals and specific information shall be provided.

1. One-line diagrams,
2. Elementary diagrams,
3. Connection diagrams,
4. Interconnection diagrams,
5. Protective device time-current characteristics on conventional-sized transparencies,
6. Operational description,
7. Installation instructions,
8. Maintenance instructions,
9. Spare parts list,
10. Test reports, including procedures, test conditions, results, and graphs.

1.05 QUALITY ASSURANCE

A. Quality assurance shall be in accordance with Section 16020 Municipal Facilities General Electrical Requirements.

B. Electrical and Mechanical Testing: All components shall be factory tested in accordance with the applicable NEMA ICS requirements.

C. Field Testing: Field tests shall be performed in accordance with Electrical Testing Requirements.

PART 2 - PRODUCTS

2.01 MOTOR CONTROL, GENERAL

A. Provide each motor with a suitable controller and devices that will function as specified for the respective motors and meeting NEMA ICS 2, the NEC, and UL.

B. Provide each motor controller with thermal overload protection in all ungrounded phases. Use protection consisting of thermal overload relays meeting NEMA ICS 2 which are sensitive to motor current and mounted within the motor controller, or a combination of thermal protectors embedded within the motor windings and controller-mounted overload relays, as indicated. Use overload protection devices of the inverse-time current characteristic type.

C. Provide controller-mounted overload relays of the manual-reset type with externally operated reset button when used without motor thermal protectors; when used in conjunction with thermal protectors, provide the automatic reset type. Select and install overload relay heaters after the actual nameplate full-load current rating of the motor has been determined.

D. If power factor correction capacitors are connected on the load side of the overload relays, incorporate the resulting reduction in line current in the selection of overload relay heaters.

E. Install and connect any required thermal protector monitoring relay provided by motor manufacturer in motor-control circuit and provide manual reset function.

2.02 MANUALLY OPERATED STARTERS, FRACTIONAL HORSEPOWER

A. Provide starters meeting NEMA ICS 2 with the enclosures shown, rated 1 hp at single-phase, ac voltages of 115 and 230 volts, and with thermal overload protection, and toggle or pushbutton operation. Provide for locking in the OFF position.

2.03 MANUALLY OPERATED STARTERS, INTEGRAL HORSEPOWER

A. Provide starters meeting NEMA ICS 2 of the horsepower rating, voltage, number of phases, and enclosure shown and with thermal overload protection, and pushbutton or toggle switch operation. Provide for locking in the OFF position. Provide running overcurrent protection.

2.04 FULL VOLTAGE MAGNETIC STARTERS

A. Provide starters meeting NEMA ICS 2, Class A, with the rating and enclosure shown. Starters shall be full voltage, non-reversing horsepower rated, providing combined protection against running and stalled overloads. Thermal overload relays on all phases shall be temperature compensated bimetallic type with manual reset and inherent single phasing prevention.

2.05 REDUCED VOLTAGE STARTERS

A. Provide starters meeting NEMA ICS 2, Class A, with the rating and enclosure shown. Starters shall be single-step magnetic type, having closed circuit transition and an adjustable time interval between application of starting and running conditions to the motors. Provide autotransformers suitable for medium-duty service as specified in NEMA ICS 2, and with overtemperature protection. Provide taps giving approximately 50 percent, 65 percent, and 80 percent of line voltage at output terminals.

2.06 CONTROL POWER TRANSFORMERS

A. Supply individual control power transformers unless noted otherwise. The transformers shall have sufficient capacity to serve the connected load and limit voltage regulation to 10 percent during contact or pickup. Fuse one side of the secondary winding and ground the other side. Provide primary, current limiting fuses where fuses shown on Drawings, or where required by applicable codes and standards.

2.07 MOTOR CONTROL CENTERS

A. Provide motor control centers and components meeting the requirements of the latest revised NEMA and UL standards and the following requirements, unless otherwise indicated:

RATING

Voltage	As indicated on the Drawings.
Short Circuit Rating:	42,000 amps rms symmetrical, or as determined by electrical studies.
NEMA Class	Class 2, Type B with all remote control and signal circuits wired to a separate terminal board compartment in each motor control center lineup; all additions and revisions shall be included in the final as-built record drawings.

ENCLOSURE

Type	NEMA Type as shown.
Vertical Section	90-inches high, 20-inches wide, or as shown.
Dimensions	20-inches deep, Or depth as shown.
Finish	Exterior: manufacturer's standard gray over a primer and rust inhibitor or as per architectural standard; Interior: white lacquer or enamel.
Construction	Sheet steel reinforced with channel or angle irons, section constructed so they may be butted flush, end-to-end against a similar section without bolts, nuts, or cover plates causing interference; removable top cover plates and bottom cover plates.
Section Mounting	Removable formed steel channel sills and removable lifting angles.
Horizontal Wiring	Full width, top and bottom, accessible from front Compartments.
Vertical Wiring	Full height, isolated from unit Compartment starters with a separate door, accessible from front.
Unit Compartment	Individual compartments separated by steel barriers for each starter, feeder, or other unit capable of being wired from front without unit removal.
Compartment Doors	Separate hinged doors for each starter, feeder, or other unit.
Door Interlocking	Individual Starter and feeder doors mechanically interlocked so doors cannot be opened with unit energized; defeater mechanism to allow intentional access at any time; provisions for padlocking external disconnect handles in the OFF position.
Cable Entrance	Main circuits enter from top or bottom depending on arrangement, control and feeder circuits enter from top or bottom depending on arrangement.
Busway Entrance	Pull box with flanged connection for incoming busway, bus connection to motor control center main power bus and cable connection to ground bus and neutral bus; match dimensions of incoming busway.

BUS

Horizontal Power Bus	3-phase copper bus entire width of control center rated as indicated, constructed to allow future extension of additional sections; pressure type solderless lugs for each incoming line cable; Belleville washers on all bus connection bolts.
Vertical Power Bus	3-phase copper bus full height of section rated 300 amps minimum; "sandwich" type bus insulation that provides dead front construction with starter units removed except for bus stab openings; Belleville washers on all bus connection bolts.
Neutral Bus	Copper; Belleville washers on all bus connection bolts.
Ground Bus	Copper, 400A minimum capacity; Belleville washers on all bus connection bolts.
Bus Bracing	As indicated or determined based on electrical studies, 42,000 minimum amps rms symmetrical.

MOTOR STARTER UNITS

General	Individual components and control devices including pushbuttons, selector switches, indicating lights, control relays, time delay relays, and elapsed time meters as specified in Section 16100, "Basic Materials and Methods".
Construction	Drawout combination type with stab connections, except where size and weight of equipment make this impracticable; readily interchangeable with starters of similar size; provide pull-apart unit control wiring terminal boards on all units.
Starters	NEMA standard rating, NEMA Size 1; minimum meeting requirements specified under article 2.1, MOTOR CONTROL, GENERAL.
Disconnecting Device	Disconnecting device lockable in OPEN position.
Circuit Breakers	Molded case motor circuit protectors with manufacturer's recommended trip setting for maximum motor protection, tripping indicated by operating handle position; interrupting capacity required for connection to system with short circuit capacity indicated; shunt trip for ground fault protection; copies of circuit breaker time-current characteristics.
Fused Switches	Heavy-duty (HD), motor rated, load-break, quick-make, quick-break type meeting requirements of UL and NEMA KS 1; current- limiting fuses as specified with rejection clips.
Load Detector Relays	Manual reset with adjustable differential; Relays Cutler-Hammer Type D60LA, or equal.
Motor Overload	Temperature compensated, three-pole, Protection bimetallic thermal overload relay; manual-reset overload relays when used independently of other overload protection; automatic reset when used with integral motor thermal protector Motor ThermalManual-reset interposing Protection Interface relay for connection to motor-mounted thermal protector system.
Ground Fault	Same as under FEEDER UNITS AND MAIN PROTECTIVE DEVICE, except instantaneous operation device.
Capacitor Connection	Special terminals to allow easy connection of power factor correction capacitors on the source side of starter overload relays on all starters where capacitor connection is shown.

CONTROL UNITS

Disconnecting Device	Disconnecting device capable of de-energizing all circuits in the unit. Provide a warning sign giving location of disconnecting device if not located in the unit.
Control Devices	As indicated on the Drawings and as specified in Section 16100, "Basic Materials and Methods".
Wire Markers Control Wiring	Permanent sleeve type markers to be applied to all wires. Minimum wire size 14 AWG copper.

FEEDER UNITS AND MAIN PROTECTIVE DEVICE

Construction	Same as under MOTOR STARTER UNITS with UL service entrance label on main protective device.
Circuit Breakers	Unless otherwise indicated, molded case with thermal-magnetic trip and interrupting capacity required for connection to system with short circuit capacity indicated; tripping indicated by operating handle position; suitable for use with 75 degrees C wire at full NEC 75 degrees C ampacity; shunt trip for ground fault protection and phase monitoring relay; for main and feeder protective devices, use molded case circuit breakers with ambient insensitive solid state trips and having the current sensors and solid state logic circuits integral in the circuit breaker frame; use solid state current control providing adjustable ampere setting, adjustable long-time delay, adjustable short-time trip and delay band, fixed instantaneous trip set at 15 times the current sensor rating and adjustable ground fault trip and delay band; make settings behind a sealable tamper-proof transparent cover; locate a trip button on the front cover of the circuit breakers to permit mechanical simulation overcurrent tripping for test purposes and to trip the breaker quickly in an emergency situation; copies of circuit breaker time-current characteristics.
Fused Switches	Heavy-duty (HD) motor rated, load-break, quick-make, quick-break type meeting requirements of UL and NEMA KS 1; suitable for use with 75 degrees C wire at full NEC 75 degrees C ampacity; current-limiting fuses as specified with rejection clips.
Ground Fault	Suitable for 480-volt, 3-phase, Protection four-wire, solidly grounded wye system; consisting of ground sensors encircling all phase conductors and neutral conductor where used and connected to ground relays with adjustable pickup settings and time-current characteristics indicated; circuit breaker shunt trip and relay operating from a fused 120-volt ac control source within the control center; ground fault system ITE Ground Shield, General Electric Ground Break, or equal; copies of relay time-current characteristics.
Key Interlocking	Kirk key interlocking where indicated.
Phase Monitoring	3-phase monitoring relay to protect Motor against low Relay voltage, voltage unbalance, and phase reversal; Furnas Class 47, or equal.

INSTRUMENTS

Voltmeter	Scale indicated, switchboard class with 250-degree scale, GE AB-40, or equal, panel type, nominal 4-1/2-inch model with ON/OFF single-phase. 3-phase phase-to-phase, phase-to-ground, OFF, seven-position selector switch.
Ammeter	Scale indicated, switchboard class with 250-degree scale, GE AB-40, or equal, panel type, nominal 4-1/2-inch

	model with ON/OFF single-phase 3-phase OFF, four-position selector switch, C.T.'s with ratio indicated.
NAMEPLATES	Engraved with inscription as shown on the single-line diagram, laminated plastic nameplates for each motor control center and each unit, blank nameplates on spaces for future units. Nameplates that are white and engraved to a black core; attach nameplates with stainless steel panhead screws.
DIAGRAMS	Schematic (elementary) and outline diagrams, equipment schedules, wireless unit connection diagrams.

2.08 ACCEPTABLE MANUFACTURERS

A. Eaton;

B. Schneider;

C. Or equal.

PART 3 - EXECUTION

3.01 GENERAL

A. Perform work in a workmanlike manner with craftsmen skilled in the particular trade. Provide work presenting a neat and finished appearance.

3.02 INSTALLATION

A. Install equipment in strict accordance with submittal drawings and manufacturer's recommendations. Install motor control centers in accordance with NEMA ICS 2.3 as a minimum. Secure motor control centers using approved means as per latest standards and regulations. Grout mounting channels provided with motor control into the floor or mounting pads.

B. Provide a qualified, factory-trained representative to supervise installation, final adjustment, and initial energization of this equipment. Make this representative available for as long as his services are required, but in any case for a period of 5 days minimum. At the end of installation and adjustment, provide certification signed by this representative that the equipment has been properly installed and tested, and is ready for energization.

C. Retighten to NEMA standards all current-carrying bolted connections and all support framing and panels.

D. Field adjust the trip settings of all motor starter magnetic trip only circuit breakers. Adjust as per manufacturer's recommendations. Determine motor rated current from motor nameplate following installation. In the selection of overload relay heaters, allow for motor current reduction where power factor correction capacitors are installed on the load side of the overload heaters. Prepare a typed tabulation of motor name, motor horsepower, nameplate full load current, measured load current, heater catalog number, protective device, trip setting, and include copy in the Technical Manual. Attach to the tabulation a copy of the starter manufacturer's overload heater selection tables, including only the tables for the particular starters provided.

E. After the equipment is installed, touch up any scratches, marks, etc., incurred during shipment or installation of equipment. If required by the ENGINEER because of undue amount of scratches, repaint the entire assembly.

3.03 FIELD TESTS

A. Field tests shall be in accordance with Section 16570 Municipal Facilities Electrical Testing Requirements.

END OF SECTION

SECTION 16380
MUNICIPAL FACILITIES UNINTERRUPTIBLE POWER SYSTEM

PART 1 - GENERAL

1.1 SCOPE

A. Required**:** Furnish and install the single or three phase uninterruptible power system (UPS) and all accessories indicated on the Contract Drawings and herein specified.

B. Comply with the GENERAL CONDITIONS, GENERAL REQUIREMENTS and the requirements of Section 16020 of this DIVISION 16 concerning definitions, guarantees, submittals, as-builts, clean-up, etc. as applicable to work of this Section.

1.2 RELATED WORK

A. Related Sections: The following sections contain requirements that relate to this section:

1. Section 16560 "Municipal Facilities Electrical Commissioning Requirements" for commissioning requirements.
2. Section 16570 "Municipal Facilities Electrical Testing Requirements" for testing requirements.

1.3 LEGAL REQUIREMENTS AND STANDARDS

A. Comply with applicable Codes and Standards noted in Subsection 1.5 of Section 16020 and the following additional commercial standards:

1.	ANSI/IEEE 241	Electric Power Systems in Commercial Buildings, Recommended Practice for.
2.	ANSI/NEMA 250	Enclosures for Electrical Equipment.
3.	EIA	Electronic Industries Association Standards.
4.	IEEE-587	Standards for Surge Suppression.
5.	NEC	National Electrical Code; Article 700 Emergency Systems.
6.	NEMA PB2	Panelboard.
7.	UL 1012	Underwriter's Laboratory Listing.
8.	UL 1778	UL Standard for Safety - Uninterruptible Power Supply Equipment.
9.	IEEE 944	Recommended Practice for the Application and Testing of Uninterruptible Power Supply for power generating stations.
10.	NEMA PE1	Uninterruptible Power Systems.
11.	California Code of Regulations Commercial Standard:	Title 8, Industrial Relations Subchapter 5, Electrical Safety Orders.

1.4 SUBMITTALS

A**.** General: Conform to applicable provisions of Subsection 1. 6G in Section 16020 General Electrical Requirements.

B. Shop Drawings and Catalogue Data: Required to provide sufficient information to indicate scope and quality of the UPS System installation as follows:

1. Block diagram showing system relationships of major components and quantities and interconnecting cable requirements.
2. Control console and panel arrangements, equipment outlet devices, and special mounting details.
3. Wiring diagrams showing terminal identification for field-installed wiring.
4. One-line diagram showing input, output, DC, and bypass circuit breakers and their sizes.
5. Operating and services manuals, furnish **6** copies for the system. The manuals shall be bound in flexible binders and all data contained therein shall be printed or typewritten. Each manual shall include all instruction necessary for proper operation and receiving of the system, and shall include a complete block diagram of the system, a complete circuit diagnosis of the system, and a wiring designation schedule for each amplifier as well as other major components, and a replacement parts list.
6. Outline, plan, and elevation drawings, showing dimensions. Mechanical details shall include anchor bolt size and location requirements and net operating and shipping weights for the equipment.

C. The CONTRACTOR shall obtain and submit to the Engineer the test reports for all equipment and material subject to factory testing.

D. The CONTRACTOR shall obtain from the manufacturer all pass codes necessary to perform diagnostic testing and troubleshooting of the system. These pass codes shall be submitted to the ENGINEER and included in the operations and Maintenance manuals.

E. Test Reports: Contractor to provide to the City a bound report of all inspections and tests required in Section 3.

1.5 QUALITY ASSURANCE

A. General**:** Conform to applicable provisions noted in Subsection 1.7 of Section 16020 General Electrical Requirements.

B. Uninterruptible power system components shall be manufactured by firms that are regularly engaged in the production of UPS system including auxiliary equipment similar to that required for this project and that have been in satisfactory service for at least 10 years.

C. Operation of the uninterruptible power system shall be demonstrated to the City Engineer to prove that under normal conditions UPS will provide power to the designated load without interruptions of functions and loss of stored information.

D. The UPS system, when specified as a three-phase unit, shall be a three-phase system in one unit. Use of three single-phase units to comprise a three-phase system is not acceptable.

E. Fabrication and assembly: Unless otherwise specified, the UPS shall be shop assembled in a single enclosure and shall utilize interchangeable plug-in printed circuit boards and power conversion components wherever possible. Shop assembly shall be performed by the UPS manufacturer; systems fabricated or assembled in whole or in part by parties other than the UPS manufacturer will not be acceptable.

D. Printed circuit boards: All printed circuit board components shall be sprayed on both sides with corrosion inhabitant compound, Konform C416, or equal.

E. During the warranty period, the CONTRACTOR shall respond to trouble calls with a competent repair person at the project site within 24 hours; the CONTRACTOR shall also maintain a full inventory of replacement parts so that all routine repairs can be completed within 24 hours. The manufacturer shall have a local representative to provide technical services.

1.6 WARRANTY

A. General Warranty: Special project warranty specified in this Article shall not deprive the Owner of other rights the Owner may have under other provisions of the Contract Documents and shall be in addition to, and run concurrent with, other warranties made by the Contractor under requirements of the Contract Documents.

B. Special Project Warranty:

1. All materials and equipment furnished and installed here under shall be new and free from all defects.
2. The Contractor shall guarantee the uninterruptible power system (UPS) including equipment and labor for a period of two (2) years from the date of final acceptance.
3. Should any trouble develop within two (2) years from date of final acceptance of the work, due to faulty material and/or workmanship, the trouble shall be corrected by the Contractor without expense to the City.

1.7 MAINTENANCE

A. Required**:** The Contractor shall respond to trouble calls with a competent repair person at the project site within 24 hours; Contractor shall also maintain a full inventory of replacement parts so that all routine repairs can be completed within 24 hours.

PART 2 - PRODUCTS

2.1 THE SYSTEM

A. General Description**:** This Specification describes a continuous duty, single-phase on-line, solid-state uninterruptible power system (UPS). The UPS shall operate in conjunction with the plant electrical system to provide power conditioning, back-up, and distribution for electronic equipment loads.

B. The UPS shall consist of the following major equipment:

1. Inverter/charger.
2. Electro-mechanical bypass switch.
3. Enclosed, sealed, maintenance-free battery. Battery cabinets for longer protection times.
4. Input, battery, and output breakers.
5. Microprocessor controlled logic and control panel.
6. Six-pole output distribution panelboard.
7. System Metering.
8. Control Panel Display.

2.2 MODES OF OPERATION

A. Modes of This On-Line Fully Automatic System:

1. Normal: The critical load is continuously controlled by the inverter/charger. It derives power as needed from the commercial ac source and supplies filtered and regulated ac power to the critical load. In addition, simultaneous float-charging of the battery occurs.
2. Emergency: Upon failure of the commercial ac power, the critical load continues to be supplied by the inverter, which without any switching obtains its power from the storage battery. There is no interruption to the critical load upon failure or restoration of the commercial ac source.
3. Recharge: Upon restoration of the commercial ac source, the inverter/charger recharges the battery. This is an automatic function and causes no interruption to the critical load.
4. Bypass Mode: If the UPS must be taken out of service for overload, load fault, or internal failures, the bypass switch automatically transfers the load to the commercial ac power. Return from bypass mode to normal mode of operation is automatic, except for overload trip which requires manual reset. Transfer to bypass mode can also be initiated manually by operating a key controlled ON/OFF switch on the control panel.
5. Maintenance Mode: If the UPS must be taken out of service for maintenance or repair, the external manual bypass switch must be operated to transfer the load to the alternate source. This transfer shall occur without interruption.
6. Downgrade: If the batteries alone are taken out of service, they shall be disconnected from the by circuit breakers. The UPS shall continue to function and meet all of the performance criteria specified herein, except for the reserve time capability.
7. Non-Redundant.

2.3 UPS PERFORMANCE CHARACTERISTICS

A. Power Ratings**:** 1.5 kVA for load power factor range of 0.85 lagging to 0.95 leading.

B. Input:

1. Nominal Input Voltage and Frequency: 60 Hz models: 120 vac single-phase.
2. Operating Input Voltage Range: +13 percent to -20 percent of nominal without battery discharge.
3. Input Power Factor: 0.9 minimum at full load and nominal input voltage.
4. Input Current THD: 10 percent typical at full load (linear or non-linear).
5. Input Surge Suppression: Per IEEE-587 Standards.

C. Output:

1. Nominal Output Voltage: Same as input voltage.
2. Output Voltage Regulation: Within $\pm$2 percent from nominal output voltage for all operating conditions.
3. Manual Output Voltage Adjustment: Within $\pm$5 percent from nominal.
4. Transient Voltage Response: Within ±8 percent from nominal peak voltage for a 100 percent load step.
5. Transient Voltage Recovery: 100 msec to within ±2 percent of nominal.
6. Frequency Regulation: ±0.1 Hz.
7. Output Voltage Harmonic Distortion: 3 percent THD for 100 percent linear load, 5 percent THD for 100 percent non-linear loads at nominal input voltage.
8. Output fully isolated from input and battery.
9. Common mode noise attenuation (without static switch): 55 dB up to 500 kHz.

D. **Electro-Mechanical Bypass:** An electro-mechanical bypass switch includes transfer control logic which automatically transfers the load to bypass upon the following conditions:

1. Output overvoltage or undervoltage.
2. Overload condition of a duration longer than 10 minutes.
3. Overtemperature.
4. Inverter failure.

Return to UPS mode of operation upon restoration of normal operating conditions shall be automatic except for overload or inverter failure which shall require a manual restart. Electro-mechanical transfers are break before make.

E. Microprocessor Controlled Logic: Fully automatic operation of the UPS shall be provided through the use of microprocessor controlled logic. All operating and protection parameters shall be firmware controlled, to eliminate the need for manual adjustments to compensate for component tolerances. The logic includes system and battery test capability to facilitate maintenance and troubleshooting. Start-up, transfers, and battery recharge shall be all automatic functions.

F. Control Panel: The UPS shall be equipped with a control panel that provides the following metering, monitoring, and control functions:

ac input voltage	(LINE VOLT)
ac input current	(LINE AMP)
ac input frequency	(LINE HZ)
dc battery voltage	(BATT VOLT)
dc battery current	(BATT AMP)
ac inverter voltage	(LOAD VOLT)
ac inverter current	(LOAD AMP)
ac inverter frequency	(LOAD HZ)

The metering display shall automatically blank after five minutes.

1. Alarm Monitoring: The following alarm indicators shall be provided on the control panel display:

a. System Normal (Green): Line is supplying power to the UPS. The UPS is controlling the load voltage, and charging the battery.
b. Alarm (Red): This indicator flashes whenever an alarm condition exists.
c. Battery undervoltage (Yellow): The battery voltage has fallen below 128 v dc. Alarm condition ceases when the battery voltage reaches 132 v dc.
d. Battery discharge (Yellow): The battery is supplying power to the load.
e. Output Overload (Red): The output current exceeds the maximum rating of the system. If the output current exceeds 105 percent of system rating for 10 minutes, the system will respond by transferring to bypass.
f. Sync Loss (Red): The utility line frequency has exceeded safe operating tolerances (±1 Hz or ±3 Hz, switch selectable) and/or the UPS is not synchronized within 5 degrees phase angle of the desired operating point.
g. AC Input Failure (Red): The line voltage is not within normal operating range for the equipment (+13 percent to -20 percent of nominal). The load is being powered by the battery, if not in bypass mode of operation.
h. Over Temp (Red): The internal temperature of the UPS cabinet is above 65 degrees C. UPS will transfer to bypass.

i. Shutdown Imminent (Red): Inverter shutdown is imminent (triggered by the battery discharging below 110 v dc or output overload over eight minutes). The load will be dropped when the battery falls below 95 v dc or the overload exceeds 105 percent for 10 minutes unless the bypass reacts.
j. On Bypass (Red): The load is receiving power which is bypassing the power protection circuitry of the UPS.
k. Inverter not ready (Red): The inverter is not ready to support the critical load.

2. Controls: The following control functions shall be provided on the control panel:

ON/OFF: Key operated switch which activates and deactivates UPS operation.

Alarm Off: Pushbutton which silences the audible alarm. The alarm will sound again at the reoccurrence of an alarm condition.

Test: Pushbutton which initiates a system test routine by simulating a utility power outage. The critical load will be supplied by the battery. When the pushbutton is released, the control circuitry resynchronizes the inverter to the input line and resumes battery charging.

3. Other controls located behind the front door shall include:

Audible Alarm Volume Control: Loud, soft and off.

Manual Restart: Pushbutton used to restart UPS after an overload or inverter failure trip.

G. Alarm Contact: A dry type summary alarm contact shall be provided for remote indication of alarm conditions.

H. Built-In Distribution: A 6-pole distribution panelboard shall be provided on the output of the system.

I. Environmental Conditions:

1. Efficiency at full, unity power factor load and nominal input voltage: 85 percent for a 1.5 kVA model. Contractor to verify requirement for 2-hour duration.
2. Elevation: 5,000 feet (1,500 m) without derating.
3. Acoustical Noise: 50 dB at one meter. (Measured at +25 degrees C.)
4. EMI Suppression: Electromagnetic effects are minimized to ensure that computer systems or other similar electronic systems are neither adversely affecting to, nor are adversely affected by, the UPS. The UPS is certified to meet the requirements of Class A, Subpart J of Part 15 of the FCC Rules and Regulations.
5. Electrostatic Discharge (Commonly Encountered in Carpeted Offices) Immunity: Withstands up to ±25 kV with no disturbance or adverse effect to the load.
6. Ambient Temperature: 40 degrees C.

J. Battery Pack: The battery consists of battery tray(s) either fully enclosed within the UPS cabinet or enclosed in metal cabinet(s) which match the UPS module in appearance. Individual battery trays are modular and individually fused.

1. Battery Type: a sealed, maintenance-free, high-rate**,** lead-acid cells, high-rate type battery shall be used as a stored energy source for the UPS. The battery shall be sized to support the inverter at rated load or the kilowatt load specified for the protection time specified 2 hr. The battery shall consist of one or more banks of cells as required, and be a common source for each inverter.
2. Expected Life: 5 years or 200 full discharge cycles at full load.
3. Minimum Final Discharge Voltage: 1.66 volts per cell.

4. Nominal Float Voltage: 2.25 volts per cell.
5. Battery Circuit Breaker: A molded case breaker is provided for battery short circuit protection and as a means of manual disconnection for battery maintenance.

2.4 FUNCTIONAL DESCRIPTION

A. Inverter/Charger**:** The inverter/charger shall employ Pulse Width Modulation (PWM) technology utilizing transistor power blocks as switching elements. The inverter shall be capable of providing the specified quality output power while operating from the ac utility or dc source within the specified operating range. In addition, the inverter shall simultaneously float charge the battery.

B**.** Electrical Protection:

1. Input protection shall be provided by a thermal-magnetic molded case circuit breaker and transient suppression circuitry.
2. Battery protection shall be provided by individual fusing of each battery tray and a thermal-magnetic molded case circuit breaker.
3. Output protection shall be provided by thermal-magnetic circuit breaker(s), fuses in the inverter circuit, and current limit circuitry.

2.5 ENCLOSURES

A. The UPS shall be housed in a free standing, double dead front (safety shields behind front door) enclosure equipped with casters and leveling feet. Enclosures shall be designed for office or computer room applications. If system consists of more than one cabinet, the cabinets shall be shipped with joining hardware to be bolted together at time of installation.

B**.** Ventilation: Electronics cabinets shall be designed for natural conversion cooling aided by a thermostatically controlled fan. Air inlets shall be in the lower front and rear; air outlets shall be in the upper rear. Battery cabinets shall be convection cooled.

C. Cable Entry: Units equipped with input cord and plug and output receptacles shall not require any installation. Hard wired systems shall provide for conduit entry through knockouts located in the rear of the unit. Connection between UPS and battery cabinets shall be provided and shall consist of cables and power plugs.

D. Front Access: Major subassemblies shall be modular and shall be replaceable from the front of the unit.

2.6 WARRANTY:

A. The system warranty shall be no less than 12 months after initial startup, and must include all costs including repair, parts, labor, travel and living expenses for the manufacturer's service personnel, within the United States. The manufacturer shall guarantee, in writing, the stated system efficiency.

2.7 DOCUMENTATION AND TRAINING.

A. The UPS shall be supplied with sufficient documentation, including a concise operation and maintenance manual, also including proprietary troubleshooting information, to allow training personnel to troubleshoot and service the UPS. The UPS vendor shall make available a maintenance training school for customer personnel.

B. Operating and Maintenance Manual: The CONTRACTOR shall furnish 6 copies of the operating and maintenance manuals. The manuals shall possess sufficient detail and clarity to enable the owner's technicians to understand and operate the system equipment, and to identify replaceable parts.

PART 3 - EXECUTION

3.1 GENERAL

A. The uninterruptible power system shall be installed as shown, shall conform with Section 16020, Municipal Facilities General Electrical Requirements and in accordance with the equipment manufacturer's installation instructions.

B. Detailed Requirements:

1. The Contractor shall receive, store, and assemble all sections of the UPS to form complete units. The Contractor shall make all internal wiring interconnections as required for complete assembly of each UPS. Where wiring connectors are not supplied by the manufacturer, the Contractor shall furnish the connectors required to complete internal wiring terminations.
2. The Contractor shall take all necessary precautions to eliminate moisture and foreign material from the equipment at all times during storage and installation. Special care shall be taken to prevent corrosion of and damage to the UPS.
3. Each UPS shall be set level and plumb on its floor channels furnished, installed, and grouted in by the Contractor as shown. The Contractor shall furnish all shims necessary to accomplish these requirements.

3.1 INSTALLATION

A. The UPS system shall be set in place, wired and connected in accordance with the approved shop drawings and manufacturer's instructions.

B. Equipment shall be adequately anchored and braced per details on structural contract drawings to withstand the seismic forces at the location where installed.

3.2 ACCEPTANCE INSPECTION AND TESTS

A. Installation, adjustment and testing of the equipment shall be supervised by a manufacturer's representative.

B. All tests shall be witnessed by the ENGINEER and Commissioning Agent.

C. Field Tests: As a minimum, the startup and field test procedures shall include the following:

1. Compare equipment nameplate data with specifications and approved shop drawings.
2. Ensure that shipping members have been removed.
3. Inspect physical, electrical, and mechanical condition.
4. Clean the UPS.
5. Attach a phase rotation meter to the UPS input, output and bypass buses, and observe proper phase sequences.
6. Torque test bus and battery connections at shipping splits.
7. Check each electrical bus for proper phasing and identification.

8. Check and test selector switches and meters for proper operation.
9. Check doors for proper alignment and operation.
10. Check and test each protective device for proper mechanical and electrical operation.
11. Verify protective device overcurrent trip settings against approved coordination study.
12. Verify the correct operation of all sensing devices, alarms, and indicating devices.
13. Perform manufacturer's onsite field test procedures.
14. Demonstrate to the ENGINEER that the interlocks have been tested and agree with the interlocking scheme.

D. Load Test: The installed system shall be load tested for a continuous 24 hour period by means of resistive load banks, provided by equipment manufacturer. The system shall be continuously tested at 1/2 load for 8 hours, 3/4 load for 8 hours and full load for 8 hours. Instrument readings shall be recorded every half hour for the following:

1. Input voltage and current (all three phases, for each module).
2. Input and output frequency.
3. Battery voltage for each module.
4. Output voltage and current (all three phases, for each module).
5. Output kilowatts for each module.
6. Output voltage and current (all three phases).
7. Output kilowatts.

E. Full Load Burn In Test:

1. The installed system shall undergo an additional full load burn-in period of 24 continuous hours. If a failure occurs during the burn-in period, the tests shall be repeated. Instrument readings shall be recorded every half hour as above. During the burn-in period, the following tests shall be performed:

    a. With the UPS carrying maximum continuous design load and supplied from the normal source, switch 100 percent load on and off a minimum of five times within the burn-in period.
    b. With the UPS carrying maximum continuous design load and supplied from the emergency source, repeat the switching operations described. Also, verify that the UPS module rectifier charger unit(s) go into the second-step current limit mode.
    c. With the UPS carrying maximum continuous design load and operating on battery power, repeat the switching operations described above.
    d. Continue operation on battery power for 1 minute, and then restore normal power.

F. Battery Discharge Test:

1. With the battery fully charged, the system shall undergo a complete battery discharge test to full depletion and a recharge to nominal conditions. Instrument readings shall be recorded every minute during discharge for the following:

    a. Battery voltage and current for each module.
    b. Output voltage and current (all three phases) for each module.
    c. Output kilowatts for each module.
    d. Output voltage and current (all three phases - system output).
    e. Output kilowatts (system output).
    f. Output frequency.

3.3 POSTING FRAMED DATA AND INSTRUCTIONS

Wiring and control diagram instructions and data shall be framed and posted under acrylic glass in a location adjacent to the UPS system as directed by the ENGINEER. Condensed operating instructions, prepared in typed form, shall be framed as specified above and posted beside the diagrams. The framed instructions shall be posted before acceptance testing of the system.

3.4 FOLLOW-UP VERIFICATION

Upon completion of acceptance checks, settings, and tests, the Contractor shall show by demonstration in service that the central uninterruptible power supply is in good operating condition and properly performing the intended function.

3.5 TRAINING OF CITY PERSONNEL

A field training course shall be provided by a certified factory-trained technician for designated City personnel. Training shall be provided for a total period of 4 hours of normal working time and shall start after the system is functionally complete but prior to final acceptance test. Field training shall cover the items contained in the operating and maintenance manuals.

END OF SECTION

SECTION 16490
ELECTRIC MOTORS

PART 1 - GENERAL

1.01 THE REQUIREMENT

A. General: The CONTRACTOR shall furnish and install electric motors, accessories, and appurtenances as specified herein and in conformance with the individual specifications of driven equipment, to provide a complete and operable installation, all in accordance with the requirements of the Contract Documents.

1.02 RELATED WORK SPECIFIED ELSEWHERE

A. The work of the following Sections and Divisions applies to the work of this Section. Other Sections of the Specifications, not referenced below, shall also apply to the extent required for proper performance of this work.

1. Section 16020 Municipal Facilities General Electrical Requirements.
2. Division 16 as applicable, Electrical.
3. Section 11510 "Submersible Non-Clog Pumps"

1.03 REFERENCE SPECIFICATIONS, CODES, AND STANDARDS

A. All work specified herein shall conform to or exceed the applicable requirements of the referenced portions of the following publications to the extent that the provisions thereof are not in conflict with other provisions of these specifications.

1.	LAEC	City of Los Angeles Electrical Code, latest adopted edition.
2.	Commercial Standards	
	NEMA MG 1	Motors and Generators.
	NEMA MG 2	Safety Standard for Construction and Guide for Selection, Installation and Use of Electric Motors and Generators.
	NEMA MG 10	Energy Management Guide for Selection and Use of Polyphase Motors.
	I EEE 43	Recommended Practice for Testing Insulation Resistance of Rotating Machinery.
	IEEE 85	Standard Test Procedure for Airborne Sound Measurement on Rotating Electric Machinery.
	IEEE 112	Standard Test Procedure for Polyphase Induction Motors and Generators.
	IEEE 113	Guide on Test Procedures for DC Machines.
	IEEE 115	Test Procedure for Synchronous Machines.

1.04 CONTRACTOR SUBMITTALS

A. Submittals shall be made in accordance with the requirements of Section 16020 Municipal Facilities General Electrical Requirements.

B. Complete motor data shall be submitted with the driven machinery shop drawings. Motor data shall include:

1. Machine name and specification number of driven machine.
2. Motor manufacturer.
3. Motor type or model and dimension drawing.
4. Nominal horsepower.
5. NEMA design.
6. Frame size.
7. Enclosure.
8. Winding insulation class and treatment.
9. Rated ambient temperature.
10. Service factor.
11. Voltage, phase, and frequency rating.
12. Full load current at rated horsepower for application voltage.
13. Starting code letter, or locked rotor kVA, or current.
14. Special winding configuration such as part-winding, star-delta. Include winding diagram.
15. Rated full load speed.
16. Power Factor at full load.
17. Noise certification and data sheets.
18. Replica of motor nameplate.
19. Bearing types and catalog numbers.

C. If water cooling is required for motor thrust bearings, the shop drawing submittals shall indicate this requirement.

D. The following submittals and specific information shall be provided.

1. General Description:

    a. Motor dimensional drawings. Net motor weight shall be noted on the dimensional drawings. Shipping weight shall also be noted if motors are to be shipped separately from the driven equipment.
    b. Complete motor rating and enclosure type.
    c. Lists of special characteristics and features being provided as specified.
    d. Thrust bearing life.
    e. Type of thrust bearing lubrication.
    f. Type of guide bearing lubrication.
    g. Statement that carbon brushes are being provided that are suitable for the low speed, continuous operation specified.

2. Motor Characteristics:

    a. Guaranteed minimum efficiency at rated load at rated voltage.
    b. Guaranteed minimum power factor at rated load at rated voltage.
    c. Expected efficiency at 1/2, 3/4, and full load at rated voltage.
    d. Expected power factor at 1/2, 3/4, and full load at rated voltage.
    e. Motor no-load current at rated voltage.
    f. Full load current at rated voltage.
    g. Full load current at 110 percent voltage.
    h. Starting current at rated voltage.
    i. Full load speed.
    j. Certified copy of test report for identical motor tested in accordance with NEMA MG 1-12.53a and IEEE Standard 112, Test Method B, showing full load efficiency not less than specified value. Motors not as specified will be rejected.

k. Recommended maximum kVAR of power factor correction capacitors when capacitors are switched with motor.
l. Time in seconds motor can be subjected to locked rotor current at rated voltage without damage to motor with (1) motor initially at rated ambient temperature, and (2) with motor initially at rated temperature rise.

3. Motor Tests and Test Reports:

a. Certified copies of test reports on actual motors being provided.
b. Short commercial tests, including running light current at rated voltage, high potential, and locked rotor current.

1.05 QUALITY ASSURANCE

A. Quality assurance shall be in accordance with all applicable requirements of Section 16020 Municipal Facilities General Electrical Requirements.

B. Adjustable frequency driven motors shall be tested as an assembly with the drive and the driven equipment prior to delivery to the site.

1.06 SERVICES OF MANUFACTURER'S REPRESENTATIVE

A. Where motors are part of packaged equipment such as Bridge Crane and Air-Conditioning Unit, a qualified manufacturer's representative shall supervise the unpacking, installation and field testing.

PART 2 - PRODUCTS

2.01 MATERIALS

A. Materials and equipment shall be standard products of established manufacturers who have produced continuously the type of equipment specified. All equipment and material shall be new and of high quality ensuring long life and reliable operation.

2.02 SERVICE CONDITIONS

A. Motors shall be designed and manufactured for continuous severe duty service.

2.03 RATING AND APPLICATION

A. Unless indicated otherwise in Divisions 11 in which the design equipment is specified or on the motor data sheets, motor enclosures shall be of the following type(s) approved for its intended purpose:

1. Motors installed indoors and outdoors shall be totally enclosed fan cooled (TEFC) with a service factor of 1.15.
2. Motors to be installed in classified areas shall conform to the requirements of NEC Article 500.

B. Motor mechanical design shall be in accordance with this Specification and the detailed requirements indicated on the individual motor data sheet.

C. The design and construction of all motors shall be coordinated with the driven equipment requirements.

D. Motors shall be designed for full-voltage starting and rated for continuous operation as shown on the Contract Drawings.

E. Motors shall operate successfully under running conditions at rated load at plus or minus 10 percent of rated voltage or plus or minus 5 percent of rated frequency or a combination of the two.

F. In sizing motors, the horsepower rating of the motor, as stamped on the nameplate, shall not be exceeded during any operating conditions of the driven equipment.

G. Starting current at full voltage shall not exceed 650 percent of the motor full load current for all integral horsepower alternating current motors.

H. All motors shall have a safe stall (locked rotor) time equal to or greater than the maximum accelerating time under the worst voltage conditions specified.

I. Motor fans shall be suitable for rotation in either direction. They shall be nonsparking, corrosion resistant material, accurately balanced before assembly on the motor.

J. All motors shall be NEMA Design "B" unless otherwise specified on the motor data sheet, or required by the application.

K. Totally enclosed motors shall be "Severe Duty Chemical Service" type including shaft seals, internal surfaces coated with corrosion resistant paint or epoxy varnish, external surfaces coated with alkyd paint or epoxy enamel.

L. All motors shall be "high-efficiency" design, capable of operating at a higher normal efficiency than the standard industry design.

1. Motors built in NEMA Frames 143T through 445T shall have the guaranteed efficiency stamped on the nameplate. The basis for motor efficiency evaluation shall be IEEE test procedure 112, Method B, using accuracy improvement by segregated loss determination including stray load loss measurements.
2. Motors built in frames larger than 445T shall have the guaranteed efficiency stamped on the nameplate. The test method used in determining efficiency (e.g., Method B-Dynamometer, Method E-Input or Method F-Equivalent Circuit) shall be designated by the CONTRACTOR.

2.04 TERMINAL BOXES

A. Terminal boxes of the split type shall be furnished for each motor unless the base or housing of the motor is of a design which incorporates provisions for incoming cables.

B. Terminal boxes for medium-voltage motors shall have sufficient interior space to permit stress cones to be formed on the incoming cables and to permit the cable shields to be properly terminated and grounded. In addition, boxes shall be sized to contain surge protection equipment.

C. Separate terminal boxes shall be furnished for each accessory device, such as space heaters, temperature detectors, and other items.

D. All boxes shall be heavy duty class, weather tight and thoroughly coated internally and externally with corrosion-resistant paint.

2.05 INSULATION

A. The insulation system shall be Class H with temperature rise (based on maximum ambient temperature of 40 degrees C) of 80 degrees C measured by the resistance method.

B. Motors constructed in NEMA Frame 364 and larger, except totally enclosed motor, shall be vacuum pressure impregnated with 100 percent solids epoxy resins. The completed insulation shall have a minimum resistance of 10 mega-ohms after 168 hours of testing in a humidity chamber maintained at 100 percent relative humidity and 40 degrees C ambient. In addition, motors with form wound coils shall also meet NEMA MG1-20.48 Qualification Test.

C. Totally enclosed motors shall be dipped and baked in epoxy resin. The completed insulation shall have a minimum resistance of 1.5 mega-ohms after testing as in 2.5B above.

2.06 BEARINGS AND LUBRICATION - VERTICAL MOTORS

A. Vertical motors shall be solid shaft or hollow shaft and bearings shall be anti-friction type grease.

B. Motors for "Process" or "In-Line" service shall be "In-Line, Solid Shaft" type construction with a clamped and locked bearing arrangement. Mounting and shaft extension dimensions and tolerances shall be in accordance with NEMA MG1-18.620 or 18.625. The bearings shall be rated for a L10 minimum life of 2 years or 17,500 hours at the maximum expected up or down thrust the driven equipment may impose during startup or operation at any capacity including shutoff.

2.07 WINDINGS AND WINDING PROTECTION

A. Stator windings shall be copper.

2.08 BALANCE AND VIBRATION

A. Motors shall be dynamically balanced. Method of measuring dynamic balance shall be when measured in accordance with NEMA MG1-12.06 or MG1-20.52 and with the maximum amplitude values as shown in NEMA MG1-12.05.

B. Motors shall have a maximum peak-to peak amplitude of vibration in accordance with MG1-20.52 when measured in accordance with MG1-12.06 B or MG1-20.53.

2.09 NAMEPLATES

A. Each motor shall have a corrosive-resistant nameplate containing information in accordance with NEMA MG1. In addition the service factor and efficiency shall be included. For motors of 250 hp and larger, the nameplate shall also state any limitations on the number of starts per day, and conditions of restarting.

2.10 PUMP PROTECTION RELAY

A. Relay shall provide the following protections:

1. Temperature monitoring in motor windings.
2. Moisture (leak) detection in motor housing.
3. Auto-reset functionality.
4. Communication for integration into SCADA system.

PART 3 - EXECUTION

3.01 INSTALLATION

A. Motors shall be installed in accordance with manufacturer's requirements.

CONTRACTOR shall make provision to protect motors from moisture by connecting power to space heaters. The space heaters shall be connected while in storage and/or before commissioning.

END OF SECTION

SECTION 16560
MUNICIPAL FACILITIES ELECTRICAL SYSTEMS COMMISSIONING

PART 1 - GENERAL

1.01 DESCRIPTION

A. The purpose of this section is to specify Division 16 responsibilities in the commissioning process which are being directed by the CA. Other electrical systems testing are required under the direction of the CM.

B. The list of commissioned equipment and systems is found in Section 01810, Part 1.12.

C. Commissioning requires the participation of Division 16 to ensure that all systems are operating in a manner consistent with the Contract Documents. The general commissioning requirements and coordination are detailed in Division 01. Division 16 shall be familiar with all parts of Division 01 and the commissioning plan issued by the CA and shall execute all commissioning responsibilities assigned to them in the Contract Documents.

1.02 RESPONSIBILITIES

A. Electrical Contractors. The commissioning responsibilities applicable to the electrical contractor are as follows (all references apply to commissioned equipment only):

1. Construction and Acceptance Phases:

   a. Include the cost of commissioning in the contract price, if not yet let.
   b. In each purchase order or subcontract written, include requirements for submittal data, O&M data and training.
   c. Attend a commissioning kickoff meeting and other necessary meetings scheduled by the CA to facilitate the construction process.
   d. Contractors shall provide normal cut sheets and shop drawing submittals to the CA of commissioned equipment.
   e. Provide additional requested documentation, prior to normal O&M manual submittals, to the CA for development of start-up and functional testing procedures.
      (1) Typically this will include detailed manufacturer installation and start-up, operating, troubleshooting and maintenance procedures, full details of any owner-contracted tests, fan and pump curves, full factory testing reports, if any, and full warranty information, including all responsibilities of the Owner to keep the warranty in force clearly identified. In addition, the installation and checkout materials that are actually shipped inside the equipment and the actual field checkout sheet forms to be used by the factory or field technicians shall be submitted to the Commissioning Agent.
      (2) The Commissioning Agent may request further documentation necessary for the commissioning process.
      (3) This data request may be made prior to normal submittals.
   f. Provide a copy of the O&M manuals submittals of commissioned equipment, through normal channels, to the CA for review and approval.

g. Contractors shall assist (along with the design engineers) in clarifying the operation and control of commissioned equipment in areas where the specifications, control drawings or equipment documentation is not sufficient for writing detailed testing procedures.
h. Provide assistance to the CA in preparation of the specific functional performance test procedures specified in Section 16570. Subs shall review test procedures to ensure feasibility, safety and equipment protection and provide necessary written alarm limits to be used during the tests.
i. Develop a full start-up and initial checkout plan using manufacturer's start-up procedures and the prefunctional checklists from the CA. Submit manufacturer's detailed start-up procedures and the full start-up plan and procedures and other requested equipment documentation to CA for review.
j. During the startup and initial checkout process, execute and document the electrical-related portions of the prefunctional checklists provided by the CA for all commissioned equipment.
k. Perform and clearly document all completed startup and system operational checkout procedures, providing a copy to the CA.
l. Address current A/E punch list items before functional testing.
m. Provide skilled technicians to execute starting of equipment and to execute the functional performance tests. Ensure that they are available and present during the agreed upon schedules and for sufficient duration to complete the necessary tests, adjustments and problem-solving.
n. Perform functional performance testing under the direction of the CA for specified equipment in Section 16570 and 01810. Assist the CA in interpreting the monitoring data, as necessary.
o. Correct deficiencies (differences between specified and observed performance) as interpreted by the CA, CM and A/E and retest the equipment.
p. Prepare O&M manuals according to the Contract Documents, including clarifying and updating the original sequences of operation to as-built conditions.
q. During construction, maintain as-built red-line drawings for all drawings and final CAD as-builts for contractor-generated coordination drawings. Update after completion of commissioning (excluding deferred testing). Prepare red-line as-built drawings for all drawings and final as-builts for contractor-generated coordination drawings.
r. Provide training of the Owner's operating personnel as specified.
s. Coordinate with equipment manufacturers to determine specific requirements to maintain the validity of the warranty.

2. Warranty Period:

a. Execute seasonal or deferred functional performance testing, witnessed by the CA, according to the specifications.
b. Correct deficiencies and make necessary adjustments to O&M manuals and as-built drawings for applicable issues identified in any seasonal testing.

B. Electrical Designer/Engineer:

1. Refer to Section 01810 for the responsibilities of the Electrical Designer/Engineer.

1.03 RELATED WORK

A. Refer to Section 01810 for systems to be commissioned and Section 16570 for functional testing requirements.

PART 2 - PRODUCTS

2.01 TEST EQUIPMENT

A. Division 16 shall provide all test equipment necessary to fulfill the testing requirements of this Division (i.e. light meters).

PART 3 - EXECUTION

3.01 SUBMITTALS

A. Division 16 shall provide submittal documentation relative to commissioning to the CA as requested by the CA. Refer to Section 01810 Part 3.3 for additional Division 16 requirements.

3.02 STARTUP

A. The electrical contractors shall follow the start-up and initial checkout procedures listed in the Responsibilities list in this section and in 01810 Part 3.4. Division 16 has start-up responsibility and is required to complete systems and sub-systems so they are fully functional, meeting the design objectives of the Contract Documents. The commissioning procedures and functional testing do not relieve or lessen this responsibility or shift that responsibility partially to the commissioning agent or Owner.

B. Functional testing is intended to begin upon completion of a system. Functional testing may proceed prior to the completion of systems, or sub-systems at the discretion of the CA and CM. Beginning system testing before full completion does not relieve the Contractor from fully completing the system, including all prefunctional checklists as soon as possible.

3.03 FUNCTIONAL PERFORMANCE TESTS

A. Refer to Section 01810 Part 1.12 for a list of systems to be commissioned and to Part 3.5 for a description of the process and to Section 16570 for specific details on the required functional performance tests.

3.04 TESTING DOCUMENTATION, NON-CONFORMANCE AND APPROVALS

A. Refer to Section 01810 Part 3.6 for specific details on non-conformance issues relating to prefunctional checklists and tests.

B. Refer to Section 01810 Part 3.5 for issues relating to functional performance tests.

3.05 OPERATIONS AND MAINTENANCE (O&M) MANUALS

A. Division 16 shall compile and prepare documentation for all equipment and systems covered in Division 16 and deliver to the GC for inclusion in the O&M manuals, according to Section 01810.

B. The CA shall receive a copy of the O&M manuals for review.

3.06 TRAINING OF OWNER PERSONNEL

A. The GC shall be responsible for training coordination and scheduling and ultimately to ensure that training is completed. Refer to Section 01810 for additional details.

B. The CA shall be responsible for overseeing and approving the content and adequacy of the training of Owner personnel for commissioned equipment. Refer to Section 01810 for additional details.

C. Electrical Contractor. The electrical contractor shall have the following training responsibilities:

1. Provide the CA with a training plan two weeks before the planned training according to the outline described in Section 01810, Part 3.8.
2. Provide designated Owner personnel with comprehensive training in the understanding of the systems and the operation and maintenance of each major piece of commissioned electrical equipment or system.
3. Training shall start with classroom sessions, if necessary, followed by hands on training on each piece of equipment, which shall illustrate the various modes of operation, including startup, shutdown, fire/smoke alarm, power failure, etc.
4. During any demonstration, should the system fail to perform in accordance with the requirements of the O&M manual or sequence of operations, the system will be repaired or adjusted as necessary and the demonstration repeated.
5. The appropriate trade or manufacturer's representative shall provide the instructions on each major piece of equipment. This person may be the start-up technician for the piece of equipment, the installing contractor or manufacturer's representative. Practical building operating expertise as well as in-depth knowledge of all modes of operation of the specific piece of equipment is required. More than one party may be required to execute the training.
6. The training sessions shall follow the outline in the Table of Contents of the operation and maintenance manual and illustrate whenever possible the use of the O&M manuals for reference.
7. Training shall include:

    a. Use the printed installation, operation and maintenance instruction material included in the O&M manuals.
    b. Include a review of the written O&M instructions emphasizing safe and proper operating requirements, preventative maintenance, special tools needed and spare parts inventory suggestions. The training shall include start-up, operation in all modes possible, shut-down, seasonal changeover and any emergency procedures.
    c. Discuss relevant health and safety issues and concerns.
    d. Discuss warranties and guarantees.
    e. Cover common troubleshooting problems and solutions.
    f. Explain information included in the O&M manuals and the location of all plans and manuals in the facility.
    g. Discuss any peculiarities of equipment installation or operation.
    h. The format and training agenda in Guidelines for Commissioning HVAC Systems, ASHRAE, 1989R, 1996 is a recommended reference.
    i. Classroom sessions shall include the use of overhead projections, slides, video and audio taped material as might be appropriate.

8. Hands-on training shall include start-up, operation in all modes possible, including manual, shut-down and any emergency procedures and maintenance of all pieces of equipment.
9. The electrical contractor shall fully explain and demonstrate the operation, function and overrides of any local packaged controls, not controlled by the central control system.

    a. Training shall occur after functional testing is complete, unless approved otherwise by the Project Manager.
    b. Duration of Training. The electrical contractor shall provide training on each piece of equipment according to the following schedule.

Hours	System
2	Pump drives

3.07 DEFERRED TESTING

A. Refer to Section 01810, Part 3.9 for requirements of deferred testing.

3.08 WRITTEN WORK PRODUCTS

A. Written work products of Contractors will consist of the startup and initial checkout plan described in Section 01810 and the filled out startup, initial checkout and pre-functional checklists.

END OF SECTION

THIS PAGE INTENTIONALLY LEFT BLANK

SECTION 16570
MUNICIPAL FACILITIES ELECTRICAL TESTING REQUIREMENTS

PART 1- GENERAL

1.1 INCLUDED SYSTEMS AND EQUIPMENT

A. The following is a list of the equipment and system test requirements included in this section:

1. Lighting sweep controls (weekday, weekend, and holiday schedules).
2. Occupancy sensors.
3. Photo sensors (indoor and outdoor).
4. Lighting controllers (indoor and outdoor).

1.2 DESCRIPTION

A. This section specifies the functional testing requirements for Division 16 systems and equipment. From these requirements, the Commissioning Authority (CA) shall develop step-by-step procedures to be executed by the Subs. The general functional testing process, requirements and testing methods definitions are described in Section 01810. The test requirements for each piece of equipment or system contain the following:

1. The contractors responsible to execute the tests, under the direction of the CA.
2. A list of the integral components being tested.
3. Prefunctional checklists associated with the components.
4. Functions and modes to be tested.
5. Required conditions of the test for each mode.
6. Special procedures.
7. Required methods of testing.
8. Required monitoring.
9. Acceptance criteria.
10. Sampling strategies allowed.

1.3 PREREQUISITES

A. The following applicable generic prerequisite checklist items are required to be listed on each written functional test form and be completed prior to functional testing.

1. All related equipment has been started up and calibrated and start-up reports and prefunctional checklists submitted and approved ready for functional testing. Sample prefunctional checklists can be found in Section 01813. These are samples and for reference only. Final prefunctional checklists will be provided as part of the Construction Phase Commissioning Plan.
2. All A/E punchlist items for this equipment corrected.
3. These functional test procedures reviewed and approved by installing contractor.
4. Safeties and operating ranges reviewed by the CA.
5. Test requirements and sequences of operation attached.
6. Schedules and set points attached.
7. Record of all values for pre-test set points changed to accommodate testing has been made and a check box provided to verify return to original values (control parameters, limits, delays, lockouts, schedules, etc.).

PART 2 - PRODUCTS (NOT USED)

PART 3 - EXECUTION

3.1 LIGHTING SWEEP CONTROLS

A. Parties Responsible to Execute Functional Test:

1. Lighting Controls contractor: operate the controls.
2. Electrical contractor: assist in testing sequences.
3. CA: to witness, direct and document testing.

B. Prerequisites:

1. The applicable prerequisite checklist items listed in the beginning of Section 16570 shall be listed on each functional test form and checked off prior to functional testing.

C. Functions/Modes Required To Be Tested and Test Methods:

1. The following testing requirements are an addition to and do not replace any testing requirements elsewhere in this Division.

Function/Mode	Test Method Manual (demonstration), Monitoring, Either or Both
MISCELLANEOUS FUNCTIONS	
1. All specified functions and features are set up, debugged and fully operable.	Verbal discussion of features
2. Power failure and battery backup and power-up restart functions.	Demonstration
3. Security and access codes.	Demonstration
4. Verify override duration setting.	Demonstration
5. Scheduling features fully functional and setup, including weekdays, weekends, and holidays.	Observation in terminal screens or printouts
SWEEP FUNCTIONS	
1. 50% of the zones with a minimum of 2 zones per controller or relay must be verified by turning on at least 25% of the lights in the zone and witnessing an actual sweep.	Either
OVERRIDE FUNCTIONS	
1. Manual occupant overrides: 25% of the local override switches, with a minimum of 4 switches must be verified by turning the override switches ON after a sweep and seeing the lights turn back on. 100% of the remainder of the switches should be sight verified to be in place.	Either

D. Acceptance Criteria (referenced by function or mode ID):

1. For the conditions, sequences and modes tested, the sweep controls, integral components and related equipment respond to changing conditions and parameters appropriately as expected, as specified and according to acceptable operating practice.

E. Sampling Strategy for Identical Units:

1. Sample the units per the above table. If 10% of the units in the first sample fail the functional performance tests, test another 10% of the group (the 2nd sample). If 10% of the units in the 2nd sample fail, test all remaining units in the whole group, fully at the contractor's expense.

1.2 OCCUPANCY SENSORS

A. Parties Responsible to Execute Functional Test:

1. Electrical contractor: assist in testing sequences.
2. CA: to witness, direct and document testing.

B. Prerequisites:

1. All occupancy sensor calibration and set points shall be verified prior to functional testing.
2. The applicable prerequisite checklist items listed in the beginning of Section 16570 shall be listed on each functional test form and checked off prior to functional testing.

C. Functions/Modes Required To Be Tested and Test Methods:

1. The following testing requirements are an addition to and do not replace any testing requirements elsewhere in this Division.

Function/Mode	Test Method Manual (demonstration), Monitoring, Either or Both
MISCELLANEOUS FUNCTIONS	
1. All specified functions and features are set up, calibrated, debugged and fully operable.	Verbal discussion of features
2. Occupant over-ride functions and duration setting.	Demonstration
OCCUPANCY SENSOR FUNCTIONS	
1. Test the sequence of operation for all features and modes.	Manual
2. Verify that the controls and sensors are not easily overridden or disabled by occupants.	Visual inspection
3. Verify that the occupancy sensor is in an adequate location and is not being affected by obstructions.	Visual inspection

D. Acceptance Criteria (referenced by function or mode ID):

1. For the conditions, sequences and modes tested, the dimming controls, integral components and related equipment respond to changing conditions and parameters appropriately as expected, as specified and according to acceptable operating practice.

E. Sampling Strategy for Identical Units:

1. Each occupancy sensor and its controlled zone must be tested (no sampling).

1.3 PHOTO SENSORS

A. Parties Responsible to Execute Functional Test:

1. Electrical contractor: assist in testing sequences.
2. CA: to witness, direct and document testing.

B. Prerequisites:

1. All photo sensor calibration and set points shall be verified prior to functional testing.
2. The applicable prerequisite checklist items listed in the beginning of Section 16570 shall be listed on each functional test form and checked off prior to functional testing.

C. Functions/Modes Required To Be Tested and Test Methods:

1. The following testing requirements are an addition to and do not replace any testing requirements elsewhere in this Division.

Function/Mode	**Test Method Manual (demonstration), Monitoring, Either or Both**
MISCELLANEOUS FUNCTIONS	
1. All specified functions and features are set up, calibrated, debugged and fully operable (indoor and outdoor sensors).	Verbal discussion of features
PHOTO SENSOR FUNCTIONS	
1. Test the sequence of operation for all features and modes (weekday, weekend, and holiday schedules) and interlocks with time clocks, if any.	Manual
2. Verify that the controls and sensors are not easily overridden or disabled by occupants.	Visual inspection
3. Verify that the photo sensor is in an adequate location and is not being affected by obstructions.	Visual inspection
DIMMING FUNCTIONS	
1. Verify that dimming does not cause lower than specified light levels in adjacent "non-dimmed" spaces.	

D. Acceptance Criteria (referenced by function or mode ID):

1. For the conditions, sequences and modes tested, the dimming controls, integral components and related equipment respond to changing conditions and parameters appropriately as expected, as specified and according to acceptable operating practice.

E. Sampling Strategy for Identical Units:

1. Each photo sensor and its controlled zone must be tested (no sampling).

END OF SECTION

SECTION 17100
METERS, GENERAL

PART 1 - GENERAL

1.01 THE REQUIREMENT

A. The CONTRACTOR shall furnish and install all meters and flow measurement devices with associated instrumentation and controls as shown and specified herein, complete and operable, for functions including (but not limited to) flow measurement, density determination, and batch metering of water, wastewater, sludge, chemicals and gases in accordance with the requirements of the Contract Documents.

B. Furnish meters for functions in addition to those listed above wherever required by the Contract Documents and/or required by the specified process.

1.02 RELATED WORK SPECIFIED ELSEWHERE

A. Division 2 and 15, as applicable, Piping.

B. Section 09800 Protective Coating.

C. Section 11000 Equipment General Provisions (Mechanical).

D. Section 16100 Basic Materials and Methods (Electrical).

E. Section 17160 Magnetic Flow Meters.

F. Section 17240 Area-Velocity Ultrasonic Flow Meters.

G. Section 17400 Process Instrumentation and Control.

1.03 REFERENCE SPECIFICATIONS, CODES, AND STANDARDS

A. Comply with reference specifications of Section 17400 Process Instrumentation and Control.

B. Commercial Standards:

1. ANSI/ASME B16.1 Gray Iron Pipe Flanges and Flanged Fittings (Classes 25, 125, 250).
2. ANSI/AWWA C207 Steel Pipe Flanges for Waterworks Service - Sizes 4 In. Through 144 In. (100 mm Through 3,600 mm).
3. ANSI/AWWA C701 Cold-Water Meters - Turbine Type, for Customer Service.
4. ANSI/AWWA C702 Cold-Water Meters - Compound Type.
5. ANSI/AWWA C704 Propeller-Type Meters for Waterworks Applications.
6. ASME REPORT Fluid Meters, Sixth Edition, 1971.

1.04 CONTRACTOR SUBMITTALS

A. Comply with applicable subsections of Section 17400 Process Instrumentation and Control.

B. Shop Drawings: The CONTRACTOR shall submit complete shop drawings of all meters for review in accordance with Section 01330 Shop Drawings Submittals of the GENERAL REQUIREMENTS. Each meter shall be identified with its equipment number/tag number as shown or specified.

C. Manufacturer's Data: With the shop drawings, the CONTRACTOR shall also furnish certified calibration curves indicating flow versus differential pressure and any other information called for in the individual meter specifications.

D. O & M Manuals: The CONTRACTOR shall furnish to the ENGINEER eight (8) copies of complete operation and maintenance instructions for all of the metering systems provided to the project including instrumentation and controls, as specified under Section 01782 Technical Manuals of the GENERAL REQUIREMENTS.

E. Spare Parts: The CONTRACTOR shall obtain and submit from the manufacturer a list of suggested spare parts for each piece of equipment according to the provisions of Section 01781 Spare Parts of the GENERAL REQUIREMENTS. After approval, CONTRACTOR shall furnish such spare parts suitably packaged, identified with the equipment number, and labeled. CONTRACTOR shall also furnish the name, address, and telephone number of the nearest distributor for each piece of equipment. All spare parts are intended for use by the CITY, only, after expiration of the guaranty period. Any spare parts which the ENGINEER permits the CONTRACTOR to use for startup activities shall be replaced by the CONTRACTOR prior to the CITY's acceptance of beneficial use of the equipment.

F. During the term of this Contract the CONTRACTOR shall notify the ENGINEER in writing regarding any manufacturer's modification of the approved spare parts, such as part number, interchangeability, model change or others. If the ENGINEER determines that the modified parts are no longer applicable to the supplied equipment, the CONTRACTOR at its expense shall provide applicable spare parts.

G. Special Tools: A list of special tools required shall be submitted to the ENGINEER for approval. After approval the CONTRACTOR shall supply these tools suitably wrapped and identified for application. Special tools shall include substitute steel spools for each meter for maintenance purposes. Each spool shall be labeled to identify the meter for which temporary replacement is required. The label shall include the meter identification number, size and service.

1.05 QUALITY ASSURANCE

A. Inspection and Testing Requirements: The CONTRACTOR shall obtain the services of an experienced factory service representative to inspect and test all meters for proper performance and installation.

B. Accuracy Requirements: Unless otherwise specified herein, the flow meters shall be guaranteed to register flow to an accuracy of $\pm$2 percent of actual flow throughout the range specified. All density measuring equipment shall have a reference accuracy within $\pm$2 percent of actual solids content over the range specified for each density measurement system.

1.06 MANUFACTURER'S SERVICE REPRESENTATIVE

A. Erection and Startup Assistance: During erection and startup of the plant the CONTRACTOR shall obtain all necessary assistance from an experienced factory service representative to ensure a correct and high quality installation, in accordance with the Contract Documents and the manufacturer's instructions.

B. Instruction of CITY'S Personnel: After completion of the installation and during startup of the plant, the CONTRACTOR shall instruct the CITY'S personnel in the proper operation, maintenance and repair of all metering equipment. For this purpose, the CONTRACTOR shall obtain the services of an experienced factory service representative, who shall spend sufficient time on the site to fully instruct the CITY'S operating personnel on all phases of its equipment. The ENGINEER shall be the sole judge of what is appropriate and sufficient training.

1.07 CLEANUP

A. After completion and testing of its work, the CONTRACTOR shall remove all debris from the site, clean all meters, controls, cabinets, and other metering appurtenances, and deliver to the CITY each system in proper operating condition.

B. Purge all piping and capillary tubing before connection to the meter. Use water, high pressure air, and/or mechanical mandrel as applicable.

C. Purge all electrical and signal conduits before installation of wiring. Use high pressure air followed by mechanical mandrel passed through the conduits from end to end by pull rope.

1.08 GUARANTEES, WARRANTIES

A. After completion the CONTRACTOR shall furnish to the CITY the manufacturer's written guarantees that the metering systems will operate within the published accuracies and flow ranges and meet these Specifications. The CONTRACTOR shall also furnish the manufacturer's warranties as published in its literature and as specified.

B. Warranty period shall not be less than one (1) year beginning from the day of first beneficial use by the City. Contractor testing shall not be counted in this period. Where necessary the CONTRACTOR shall purchase extended warranty coverage from the manufacturer to meet this requirement. All costs shall be included in the CONTRACTOR'S Bid price for the project.

PART 2 - PRODUCTS (NOT USED)

PART 3 - EXECUTION

3.01 INSTALLATION

A. The CONTRACTOR shall assemble and install all equipment specified herein, in strict accordance with the manufacturer's published instructions, under the supervision of the manufacturer's representative, and under the general review of the ENGINEER. All installations shall be accomplished by competent craftsmen of the appropriate trades and in keeping with the highest industrial standards for workmanship.

B. The meters shall be installed in easily accessible locations for ease of reading and maintenance. Where indicated, meters may be used for balancing of flow in several lines in conjunction with throttling and shut-off valves. Wherever possible, all meter installations shall provide the manufacturer's recommended straight run of piping upstream and downstream of the meters. All meters, shut-off and balancing valves shall be firmly supported from the structure or from the floor with approved supports. In-line meters shall be installed to provide full-line flow and not less than the manufacturer's recommended head at all times.

3.02 TESTING

A. Equipment shall be prepared for operational use in accordance with manufacturer's instructions, including bench test and calibration, where required.

B. Each item shall be subjected to an operating test over the total range of capability of the equipment. Where applicable, tests shall be conducted in accordance with the Test Code of the Standards of the Hydraulic Institute. The CONTRACTOR shall obtain copies of factory test certifications and shall notify the ENGINEER 1 week in advance of all tests to be conducted on site.

3.03 ACCEPTANCE BY CITY

A. Final acceptance of the equipment is contingent on satisfactory operation after installation.

3.04 INSTALLATION, CALIBRATION, TESTING, PRECOMMISSIONING, START-UP AND INSTRUCTION

A. Comply with the applicable subsections of Section 17400 Process Instrumentation and Control, Part 3 - EXECUTION.

B. CONTRACTOR questions regarding conduct of any part of the work shall be submitted in writing to the ENGINEER for resolution.

END OF SECTION

SECTION 17160
MAGNETIC FLOW METERS

PART 1 - GENERAL

1.01 THE REQUIREMENT

A. The CONTRACTOR shall furnish and install magnetic flow meters and all appurtenant work suitable for raw sewage, at ambient temperatures, complete and operable, and capable of continuous operation with minimum error due to pipe deposits, in accordance with the requirements of the Contract Documents.

1.02 RELATED WORK SPECIFIED ELSEWHERE

A. Section 17100 Meters, General.

B. Section 17400 Process Instrumentation and Control.

1.03 REFERENCE SPECIFICATIONS, CODES AND STANDARDS

A. Comply with the reference specifications of Section 17400 Process Instrumentation and Control.

1.04 CONTRACTOR SUBMITTALS

A. Submittals shall be made in accordance with Section 01330 Shop Drawings/Submittals of the, Section 17100 Meters, and Section 17400 Process Instrumentation and Control.

1.05 QUALITY ASSURANCE

A. Comply with Section 17400 Process Instrumentation and Control.

PART 2 - PRODUCTS

2.01 METERS

A. General: The magnetic flow meter shall utilize characterized electromagnetic induction to produce a voltage linearly proportional to the average flow rate. The metering system shall consist of a sensor with field coils, transmitter, and interconnecting cables to make a complete operating flow metering system. The meter shall be of the bi-polar pulsed DC type with continuous automatic zeroing.

B. Schedule of Magnetic Flow Meters: The CONTRACTOR shall furnish the following magnetic flow meters of the 4-20 mA at 24VDC and scaled pulse + HART type:

I.D. No.	Service	Size (in.)	Flow Range (gpm)	Transmitter Location	Pressure Rating (psi)	Liner Material	Electrode Material	Sensor Rating
FE101	Storm-Water	18"	600-6000		0-2250 psi	PTFE or hard rubber	Stainless Steel	Class 1, Div 2
FIT101				Remote				

2.02 BASIC MATERIALS

A. Construction: The sensor shall be a flanged tube with non-conductive liner. The tube shall be constructed of Type 304 stainless steel with carbon steel flanges AWWA Class D if the coils are external to the tube. If the coils are encapsulated inside the tube, the tube and flanges may be of carbon steel. The sensor rating shall be NEMA4X and capable of accidental submergence in water to a depth of 30 feet for 48 hours. The meter shall include a positive zero feature for periods when flow is known to be stopped as when a pump shuts down or a valve closes. The power supply shall be 120-VAC ±10 percent, 60-Hz ±5 percent. Accuracy of the flow meter system shall be ±0.5 percent of rate from 10 to 100 percent of scale. Below 1 foot per second fps flow velocity, accuracy shall be ±0.1 percent of full scale. Repeatability shall be 0.1 percent of rate. The liner material shall be PTFE or hard rubber. External surfaces shall be factory-finished with a corrosion resistant coating, two-part epoxy paint plus corrosion inhibiting primer. The specific conductivity of the liquid shall not preclude meter operation. Meter electrodes shall be bullet-nosed type for scouring.

B. Grounding: Grounding rings or electrodes of the same material as the sensing electrodes shall be furnished mounted in each end of all meters. Provide grounding strap between adjacent pipe, grounding rings and flow tube, unless adjacent pipe is either non-conductive or lined with non-conductive materials, in which case provide grounding strap between the rings and tube only. Grounding electrodes in the meter tube shall not supersede the requirement for grounding rings.

C. Transmitter: The transmitter shall be mounted remotely as shown or specified in the Contract Documents. When the transmitter is remote mounted, the interconnecting cable shall be furnished by the manufacturer of the metering system. Remote transmitters shall be housed in NEMA 4X rated and suitable for wall mounting. The transmitter shall produce a 4-20 mA + HART, galvanically isolated output signal linear to flow into a minimum load of 800 ohms, and a scaled pulse for totalization.

2.03 MANUFACTURERS:

A. Khrone Optiflux 2000 Ex series with IFC remote transmitter.

B. ABB Watermaster FEW 32 series with FET100 remote transmitter.

C. Sparling Tigermag FM656 series with TigermagEP remote transmitter.

D. Or equal.

PART 3 - EXECUTION

3.01 INSTALLATION

A. All magnetic flow meters and all appurtenant work shall be installed in strict accordance with the manufacturer's printed instructions and as shown/required in the Contract Documents.

B. Where requirements appear to differ, submit the matter in writing to the Engineer for a decision. For bidding purposes, the Contractor shall assume the most stringent (and costly) method will be used.

3.02 INSTALLATION, CALIBRATION, TESTING, PRECOMMISSIONING, START-UP AND INSTRUCTION

A. Comply with the applicable subsections of Section 17400 Process Instrumentation and Control, Part 3 - EXECUTION.

B. Refer any questions regarding Contract requirements to the Engineer in writing for a decision.

END OF SECTION

THIS PAGE INTENTIONALLY LEFT BLANK

SECTION 17240
AREA-VELOCITY FLOW METERS

PART 1 - GENERAL

1.1 THE REQUIREMENT

A. The CONTRACTOR shall furnish and install field-mounted ultrasonic flow meters and all appurtenant work, complete and operable, in accordance with the requirements of the Contract Documents.

1.2 RELATED WORK SPECIFIED ELSEWHERE

A. Section 17100 Meters, General.

B. Section 17400 Process Instrumentation and Controls.

1.3 REFERENCE SPECIFICATIONS, CODES AND STANDARDS

A. Comply with the reference specifications of: Section 17400 Process Instrumentation and Control.

1.4 CONTRACTOR SUBMITTALS

A. Submittals shall be made in accordance with Section 01330, Shop Drawings / Submittals, of the GENERAL REQUIREMENTS.

B. Comply with applicable subsections of Section 17400 Process Instrumentation and Control.

1.5 QUALITY ASSURANCE

A. The CONTRACTOR shall obtain the services of a factory-trained specialist to install, check, and calibrate all field-mounted ultrasonic flow meters.

B. All materials and equipment shall be of the highest available quality, new and unused.

PART 2 - PRODUCTS

2.1 GENERAL

A. Basic Design, Sensor: The Area-Velocity flow sensor shall be designed to measure open channel water flow by combining flow and depth measurements from a doppler radar velocity sensor and an ultrasonic depth sensor. Sensors designed to mount in a maintenance hole to accurately measure flow of surface run-off water in an underground pipe. Enclosure to be plastic, and waterproof to withstand temporary submergence.

B. Flow meter sensor performance:
   1. Flow accuracy: ±5 percent (of reading) ±1 percent of full scale.

   2. Range:
      a. Velocities 0 to 15 ft/sec.
      b. Depth 0 to 60 inches.

3. Surcharge: Meter to withstand temporary submergence (8 hours) without permanent damage. Meter to automatically resume flow measurement when water level drops below sensor face.

C. Flow transmitter: From same manufacturer as AV transducer and able to be remote mounted 600 feet or more from sensor. Transmitter to provide the following:

1. Display able to indicate flow, velocity and depth.

2. 120VAC, 60 Hz supply voltage input.

3. Operating temperature range: 15 deg F to 120 deg F.

4. Flow input matched to flow sensor.

5. Three 4-20mA isolated outputs for flow, velocity, and depth.

6. Alarm contact, programmable for alarms based on flow, level, velocity and bad sample.

D. Schedule of AV flow sensors and transmitters: The following AV sensors and transmitters shall be provided:

I.D. No.	Service	Pipe Size inches	Range – Velocity	Range - Depth
FIT/FE-505	Lake-Water	24"	0 to 15ft/s	0 to 24"
FIT/FE-303	Storm-Water	12"	0 to 15ft/s	0 to 12"

2.2 MANUFACTURERS

A. Hach FLO-DAR AV sensor with Flo-Station flow monitor.

B. Teledyne ISCO LaserFlow Ex sensor with Signature Flowmeter.

C. Or equal.

PART 3 - EXECUTION

3.1 INSTALLATION, CALIBRATION, TESTING, PRECOMMISSIONING, START-UP AND INSTRUCTION

A. Comply with the applicable subsections of Section 17400 Process Instrumentation and Control Part 3 - EXECUTION.

B. The sensors shall be positioned in accordance with the manufacturer's published specifications, using mounting templates provided by the manufacturer. The sensors shall be installed as shown on the drawings.

C. Installation shall be in strict accordance with the manufacturer's printed instructions.

END OF SECTION

SECTION 17400
PROCESS INSTRUMENTATION AND CONTROL

PART 1 - GENERAL

1.01 THE REQUIREMENT

A. This section sets forth the general specification and requirements for the instrumentation work for the construction of the MacArthur Lake Stormwater Capture Project.

B. A single Prime Contractor, through the use of qualified Instrumentation and Control System Subcontractor, shall furnish, install, and place into service the operating process instrumentation, all the control systems, and all the appurtenant work, being provided under this section of these Specifications and the integration of the Control and Instrumentation system and control devices provided under this project all in accordance with the requirements of the Contract Documents. The prime CONTRACTOR may act as an instrumentation and Control System Subcontractor provided the prime CONTRACTOR has been qualified to do the work as required in Paragraph 1.01 C herein for Instrumentation and Control System Subcontractors.

1. Supply and install complete instrumentation systems as indicated on the Contract Drawings and as specified herein. Complete all required engineering work such as installation details, As-built drawings, Shop submittals, test procedures, training syllabuses and materials, and similar work described in this Specification, to produce a complete, fully documented and properly operating process instrumentation and control system. It will be necessary to produce additional drawings and text records in order to complete this work.

2. Due to the complexities associated with the interfacing of numerous control system devices, it is the intent of these specifications to have the Instrumentation and Control System Subcontractor assume full responsibility for the integration and signal compatibility of the control and instrumentation system with existing devices and devices provided under other specification sections with the objective of providing a completely integrated control system free of signal incompatibilities.

3. As a minimum, the Instrumentation and Control System Subcontractor under the direction of the PRIME CONTRACTOR shall assume full responsibility for the following:

    a. Implementation of the control and instrumentation system;

        (1) Provide all engineering, labor and materials required to; prepare analog hardware submittals; design, develop, electronically draft and submit loop drawings and control panel designs; prepare test plan, training plan, and spare parts submittals; procure hardware; fabricate panels; factory test panels; supervise the installation of all instrumentation and control panel devices; perform and document all loop tests, system commissioning, and the performance of the Thirty (30) continuous day test for the entire control and instrumentation system. Prepare as-built drawings at completion of construction.

        (2) Provide all engineering, labor, and materials required to prepare Operations and Maintenance Manuals, conduct training classes, and to submit "as-built" or record drawings which reflect the installed state of the control and instrumentation system at the time of acceptance.

b. Provision of new PLC-01 Control Cabinets, LCP-01. Cabinets to be supplied under this Contract, with scope to include:

(1) Cabinet submittals including HMI graphics.

(2) Provision of the cabinet, PLC-01 and HMI hardware,

(3) Supply of all standard software. Configuration of the software including the HMI, Software configuration and graphics to be consistent with standards already developed by the City of LA Bureau of Sanitation (WINS project) for Honeywell controls already installed at other facilities.

(4) Documentation (hardcopy and AutoCAD), and witnessed factory testing of the systems.

(5) Coordination with the City for configuration of the Venice Pump Station SCADA system to accommodate remote monitoring and control.

(6) Assistance to the Prime Contractor with the installation and connection of field wiring to the cabinet.

(7) Assisting the Prime Contractor with on-site functional tests and testing of the communications link with the Venice Pump Station.

c. Integration of the control and instrumentation system with instrumentation and control devices being provided under other specification sections;

(1) Provide all engineering, labor, and materials required to review vendor drawings and to design, develop, electronically draft and submit all requisite loop drawings and "As-Built" loop drawings associated with;

(a) Equipment being provided under other divisions of these specifications.

(b) Owner furnished or existing equipment.

(2) Provide all engineering, documentation, labor, and materials required to resolve signal, power, or functional incompatibilities between the control and instrumentation system and interfacing devices.

(3) Provide all engineering, labor, and materials required to:

(a) Supervise and install all instrumentation and control panels (including City supplied equipment).

(b) Verify compliance with the manufacturer's installation recommendations.

(c) Conduct, document, supervise the performance, and documentation of loop testing.

d. The design, development, drafting and submission of all required loop drawings and as-built loop drawings associated with; (a) equipment provided under Division 17; (b) equipment provided under other divisions of these specifications; and (c) CITY furnished equipment. It is the intent of these specifications that all instrumentation loops associated with this project shall be drafted and documented in a CITY approved format as Loop Drawings and shall be submitted for CITY review and approval. All loop drawings shall be developed in an electronic format (AUTOCAD). The As-Built (final version) shall be submitted both in hard copy and electronic format.

e. All instruments shown on the loop drawings shall be itemized in an instrumentation summary generated by the Instrumentation and Control System Subcontractor. The instrument summary shall be on an electronic Excel or oracle

and hardcopy format and shall list all of the key attributes of each instrument provided under this contract. As a minimum, attributes shall include:

(1) Tag Number.

(2) Reference Drawing No.

(3) Loop Drawing Number.

(4) Service.

(5) Area Location.

(6) Associated LCP, PLC PCM, or RTU.

(7) Calibration Range.

(8) Manufacturer.

(9) Model Number.

(10) Manufacturer serial number.

4. The Instrumentation and Control System Subcontractor shall obtain from the Prime CONTRACTOR the required information on those primary elements, valve actuators, vendor packages, and other control equipment or devices which are furnished by others but are required to be interfaced under this Division.

5. The Instrumentation and Control System Subcontractor shall coordinate his work to ensure that:

   a. All components provided under this Section are properly installed.

   b. The proper type, size, and number of control wires and data communication cables with their conduits are provided, installed, and tested.

   c. The proper type, size, and number of flexible pneumatic tubes with their conduits are provided and installed.

   d. Proper electric power circuits are provided for all instrumentation components and systems.

C. Instrumentation and Control System Subcontractor Experience Requirements: Prime Contractor shall at bid, submit to the CITY documentation listed below for his proposed bid listed Instrumentation and Control System Subcontractor:

1. Documentation describing at least two projects of similar size and complexity that have been successfully completed in which the Instrumentation and Instrumentation and Control System Subcontractor performed system engineering, system fabrication and installation, documentation (including schematic, wiring and panel assembly drawings), field testing, calibration and start-up, operator instruction and maintenance training. In addition, list the following information for each project:

   a. Name of plant, owner, contact name and telephone number.

   b. Name of manufacturer for the majority of instrumentation furnished.

   c. Type of instruments/equipment furnished (i.e., transmitters, recorders, indicators, etc.).

   d. Approximate number of input functions to the system, analog and digital.

   e. Approximate number of output functions from the system, analog and digital.

   f. Contracted cost of the Instrumentation and Control System including change orders cost.

   g. Date of completion or acceptance.

2. Identify individual responsible for office engineering and management, and the individual who will be responsible for field testing, calibration, start-up and operator training for this project. Include references of recent projects for these persons.

3. Documentation showing that the Instrumentation and Control System Subcontractor has been in the instrumentation and control systems business for minimum of four years.

D. Instrumentation and Control System Subcontractors not having the experience requirements and/or failing to submit the above listed documentation will be considered not-qualified for the project. The Prime Contractor shall be responsible for substituting the bid listed Instrumentation and Control System Subcontractor with one having the required experience and documentation at no extra cost of the City.

E. The PRIME CONTRACTOR shall assign the Instrumentation and Control System Subcontractor full responsibility for the complete operation of all new and modified instrumentation and control systems. The PRIME CONTRACTOR shall have said Instrumentation and Control System Subcontractor perform all engineering and coordination necessary in order to select, furnish, install, connect, calibrate, and place into operation all sensors, instruments, alarm equipment, control boards, panels, computers, process control modules, human-machine interfaces, accessories, and all other equipment as specified herein. Furthermore, said Instrumentation and Control System Subcontractor must calibrate and demonstrate the operability of said systems in accordance with the Contract Documents. Demonstration of operability shall include re-testing of existing controls not provided by the Prime Contractor, where these controls have been modified as part of the Contract. Modifications include changes to sensors and other interfaces to the existing controls.

F. The Instrumentation and Control System Subcontractor shall provide all engineering work and installation drawings to produce a complete instrumentation system. If it is necessary to produce additional drawings (due to Instrumentation and Control System subcontractor selecting equivalent equipment/instruments in leu of the ones shown on Contract Documents) to complete and document the work, such drawings shall be made at no additional cost to the CITY.

G. The Instrumentation and Control System Subcontractor shall examine all drawings, specifications, and details to become fully acquainted with the method of construction and to evaluate the quantity of Work to be performed. In case of conflicting or incomplete technical information, the Instrumentation and Control System Subcontractor shall include costs in its lump sum bid to coordinate the resolution of these conflicts and deficiencies with the ENGINEER at no additional cost to the CITY. Resolution of these discrepancies shall be obtained from the ENGINEER by the Instrumentation and Control System Subcontractor prior to purchasing of the instrument item.

H. Instrumentation and Control System Subcontractor shall note that the equipment loop, logic and elementary diagrams are based on non-certified vendor information and indicate minimum scope of supply from the Equipment Manufacturer. The Instrumentation and Control System Subcontractor shall include all costs in this bid to add additional instruments, wiring, computer inputs/outputs, controls, conduit, interlocks, electrical hardware, drawing revisions and all related documents and drawings, into the design based on Equipment Manufacturer's final certified prints. Such changes to instrumentation and electrical work shall be incorporated into the scope of work at no additional cost to the CITY.

I. Provide all instrumentation and all related wiring as specified on any one of the following instrument or electrical documents: instrument location drawings, Instrument Index, I/O Tabulation, Loop Descriptions, one-line electrical diagrams, or as indicated on any other Contract Document. Indication of required instrumentation work on any one of these Contract

Documents shall require supply and installation of the instrument and related wiring, supports and appurtenances at no additional cost to the CITY.

J. Provide all equipment, all materials, all labor supervision, all consumables, and all scaffolding for the installation of the instrumentation systems, including the following:

1. Provide field engineering design, as required, for mounting and supporting details of all field mounted components.
2. Provide coordination, as required, between manufacturer's drawings and Contract Installation Drawings.
3. Provide any additional schematics and any additional interconnection diagrams that may be required to facilitate erection or completion of equipment installation.
4. Assemble and make interconnection of instruments disconnected for shipping purposes.
5. Remove all temporary supports, all bracing or other foreign objects that were installed in instrument control panels or other equipment to prevent damage during shipping, storage and/or erection.
6. Coordinate work with that of the different trades and disciplines so that interference between conduit, piping, equipment, architectural and structural work shall be avoided.
7. Install and support all instruments and all instrument piping not installed and supported by others. The Instrumentation and Control System Subcontractor shall furnish all hardware and all stands required to mount these items and provide modifications, as required, to meet actual site conditions.
8. All piping shall be field measured prior to fabrication/or erection. Any significant discrepancies between drawings and field measurements shall be reported to the ENGINEER. The CITY shall not be responsible for any costs for rework because of failure to field measure prior to initiating fabrication.

K. Prime Contractor shall be responsible for coordination with the City SCADA system for interface Hardware/Software, communication, loop tests, and performance of complete control system.

L. The modification shall consist of the demolition of some existing equipment and associated instrumentation and the installation of new and additional equipment and instrumentation including modifications and documentation of the existing system control panel. The work shall be performed in accordance with the requirements shown in the attached specifications, data sheets and drawings.

1.02 SUPPLY OF PLC-01 CABINETS AND SOFTWARE CONFIGURATION

A. After Contract Award, the Engineer may either:

1. Require the Prime Contractor to provide the PLC-01 cabinets and perform the software configuration of the PLC-01 and HMI. The task to include off-site and on-site testing of the cabinet and software, and coordination with the Bureau of Sanitation Operations staff to set up and test remote monitoring from Venice Pump Station.
2. Supply the PLC-01 cabinet with fully configured software for the Prime Contractor to install and connect the field wiring.

B. If the PLC-01 cabinets are supplied to the Prime Contractor, the Instrumentation and Control System Subcontractor will assist others with the site testing of the field device connections to PLC-01, PLC-01 functional pre-tests, operational pre-tests, and system startup.

1.03 RELATED WORK SPECIFIED ELSEWHERE

A. The WORK of the following Sections applies to the WORK of this Section. Other Sections of the Specifications, not referenced below, shall also apply to the extent required for proper performance of this WORK.

1. Section 09800 Protective Coating.
2. Section 11000 Equipment General Provisions.
3. Section 16020 Municipal Facilities General Electrical Provisions.
4. Section 16100 Basic Materials and Methods.

B. The monitoring and control system configurations indicated are diagrammatic. The locations of equipment are approximate unless dimensioned. The exact locations and routing of wiring and cables shall be governed by structural conditions and physical interferences and by the location of electrical terminations on equipment.

C. The PRIME CONTRACTOR shall arrange a meeting with the engineer, and PLANT at the site in order to identify equipment location prior to roughing in. All equipment shall be located and installed so that it will be readily accessible for operation and maintenance. The CITY reserves the right to require minor changes in location of equipment prior to roughing in without incurring any additional costs or charges.

D. Determine exact routing and final terminations for all signal, power, data communication wiring and cables. A site visit and review of the existing system control panel is mandatory.

1.04 REFERENCE SPECIFICATIONS, CODES AND STANDARDS

A. Comply with the reference specifications of the GENERAL REQUIREMENTS.

B. Prime Contractor shall procure all necessary permits, pay all associated costs, and shall furnish the ENGINEER with evidence of permit procurement prior to the commencement of the Work.

C. The equipment, materials and installation shall comply with the applicable standards, specifications and regulations of the following:

1. Instrument Society of America/International Society for Automation (ISA).
2. American Petroleum Institute (API).
3. National Electrical Manufacturers Association (NEMA).
4. Occupational Safety and Health Administration (OSHA).
5. American National Standards Institute (ANSI).
6. Military Standards (MIL Standards).
7. National Fire Protection Association (NFPA).
8. Scientific Apparatus Makers Association (SAMA).
9. Institute of Electrical and Electronic Engineers (IEEE).
10. National Electrical Code (NEC).
11. Insulated Cable Engineers Association (ICEA).
12. Local Power and Telephone Companies.

13. Local Authorities having jurisdiction over the work.

14. City of Los Angeles Electrical Code (CLAEC).

15. Underwriters Laboratories (UL).

16. City of Los Angeles, Department of Public Works, Bureau of Sanitation, "Operator Interface Graphic Display Standards".

17. National Institute of Standards and Technology (NIST).

18. Society of Automotive Engineers (S.A.E).

19. American Society for Testing and Materials (ASTM).

20. Steel Structures Painting Council (SSPC).

21. "GREEN BOOK" Standard Specifications for Public Works Construction – latest Edition Adopted by City of Los Angeles.

22. Federal Information Processing Standard (FIPS).

D. All electrical equipment, components, devices, etc. shall be Underwriters Laboratories APPROVED (have the UL label and/or be listed with reexamination in UL Publication Reference No.1). Alternatively, the equipment shall be APPROVED by a testing laboratory recognized by the City of Los Angeles and shall conform to all applicable requirements of the City of Los Angeles Department of Building and Safety.

1. Review and approval by the CITY Department of Building and Safety Electrical Test Laboratory (ETL) requires submittal of the equipment, components or devices and any current testing documents to the ETL. Where major equipment is submitted to ETL for approval, the Prime CONTRACTOR shall submit to the ENGINEER a detailed schedule showing the approval process and approximate equipment delivery dates to ensure that there will be no effect on the project completion date. No electrical equipment will be approved for delivery to the jobsite without ETL approval. All costs incurred in the approval process shall be included in the Bid.

2. Particular products being specified in the Contract Specifications does not express or imply approval by UL, the Department of Building and Safety or any other testing laboratory. Shop drawing approval by the ENGINEER shall not supersede the requirements of the Department of Building and Safety for listed equipment.

1.05 SUBMITTALS/SHOP DRAWINGS

A. Submittals shall be made in accordance with Section 01330 Shop Drawings and Submittals of the GENERAL REQUIREMENTS.

B. Shop Drawings: Coordinate the work required in these Specifications so that a complete instrumentation and control system for the facility will be provided and will be supported by accurate shop and as built drawings. The Instrumentation and Control System Subcontractor shall prepare and submit complete and organized shop drawings, as specified herein. Interface between instruments, motor bypass starters, control valves, variable speed drives, flowmeters, existing instruments, Piping and Instrumentation, Local Control panel, New Instruments, included but not limited to, and other equipment related to instrumentation and control shall be included in the shop drawing submittal.

C. A table of Contents shall be provided at the beginning of each binder or volume of the Submittal/Manual and shall list entries down to instrument and device level indexed by name, tag number and sequential page number. All pages of each binder/volume shall be sequentially

numbered for ease of reference and review. During the period of preparation of this submittal, the Prime CONTRACTOR shall authorize direct, informal liaison between the Instrumentation and Control System Subcontractor and the ENGINEER for exchange of technical information. As a result of this informal liaison, certain minor refinements and revisions in the Systems as specified may be authorized informally by the ENGINEER through oral communication, but these shall not alter the scope of work or cause increase or decrease in the Contract price. During this informal exchange, no oral statement by the ENGINEER shall be construed to give formal approval of any component or method, nor shall any statement be construed to grant formal exception to or variation from these Contract Documents.

D. The Instrumentation and Control System Subcontractor shall submit an analog/digital hardware submittal that utilizes detailed shop drawings and data prepared and organized for easy reference. Section Tabs, Sequential page numbering and Table of Contents / Index Tables shall be used throughout. All shop drawings shall include the letter head and/or title block of the Prime CONTRACTOR responsible for this project. The title block shall include, as a minimum, the Prime CONTRACTOR'S registered business name and address, project name, drawing name, revision level, and personnel responsible for the content of the drawing. The quantity of submittal sets required shall be as specified in Section entitled, "Contractor Submittals." The analog/digital hardware submittal shall be submitted as a complete bound package at one time within ninety (90) calendar days of receipt of Notice to Proceed, and shall include:

1. Drawings showing definitive diagrams for every instrumentation loop and system. These diagrams shall show and identify each component of each loop or system using legend and symbols from ANSI/ISA S5.4, extending the format as shown on Instrumentation Drawings and as defined by the most recent revision in ISA. Each System or Loop diagram shall be drawn on a separate drawing sheet with no more than four loops per drawing. Develop, submit, update and maintain in an as-built condition the loop drawings for all loops in this project including vendor supplied packages, equipment supplied under Division 17 and CITY supplied packages. The loop drawings shall also show all software modules and linkages. In addition to the expanded ISA S5.4 requirements the Loop Diagrams shall also contain the following details:

    a. ISA tag number.

    b. Functional name of each loop.

    c. Tag number of the loop.

    d. Reference name, drawing, and Loop diagram numbers for any signal continuing off loop diagram sheet.

    e. MCC Panel, circuit, and breaker numbers for all power feeds to the loops and instrumentation (i.e., 24VDC and 120VAC).

    f. Designation and if appropriate terminal assignments associated with every manhole, pull box, junction box, conduit, and panel the loop circuits pass through.

    g. Vendor panel, instrument panel, conduit, junction boxes, equipment and DCS terminations, termination identification wire numbers and colors, power circuits, and ground identifications.

    h. Calibration range.

    i. Manufacturer.

    j. Model Number.

2. Fully executed ISA-S20 data sheets for each component, together with a technical product brochure or bulletin. The technical product brochures must be complete enough

to verify conformance to all Contract Document requirements. The data sheets, as a minimum, shall show:

a. Component functional description used herein and on the Drawings.

b. Manufacturer's model number or other product designation.

c. Project tag number used herein and on the Drawings.

d. Project system or loop of which the component is a part.

e. Project location or assembly at which the component is to be installed.

f. Input and output characteristics.

g. Scale range and units (if any) and multiplier (if any).

h. Requirements for electric supply (if any).

i. Requirements for air supply (if any).

j. Materials of component parts to be in contact with, or otherwise exposed to, process media.

k. Optional/Special requirements or features.

3. A complete index shall appear in the front of each bound submittal volume. A separate technical brochure or bulletin shall be included with each instrument data sheet. The data sheets shall be indexed in the submittal by systems or loops, as a separate group for each system or loop. If, within a single system or loop, a single instrument is employed more than once, one data sheet with one brochure or bulletin may cover all identical uses of that instrument in that system. Each brochure or bulletin shall include a list of tag numbers for which it applies. System groups shall be separated by labeled tags.

4. Drawings showing both schematic and wiring diagrams for control circuits: Complete details on the circuit interrelationship of all devices within and outside each Control Board shall first be submitted using schematic control diagrams. Subsequent to return of this first submittal by the ENGINEER, piping and wiring diagrams shall be prepared and submitted for review by the ENGINEER; the diagrams shall consist of component layout drawings to scale, showing numbered terminals on components together with the unique number of the wire to be connected to each terminal. Piping and wiring diagrams shall show terminal assignments from all primary measurement devices, such as flowmeters, and to all final control devices, such as pumps, valves, and vendor panels. Should an error be found in a shop drawing at any time in the project, it shall be corrected including any field changes found and an "As Built" drawing shall be prepared and submitted for review and approval by the ENGINEER prior to the acceptance of the project. Furnish all necessary equipment suppliers' shop drawings to facilitate inclusion of this information. Respond to all comments on the shop drawing re-submittals made by the ENGINEER either by noted corrections or stating why it was not revised. Any resubmittals received by the ENGINEER which do not contain responses to the ENGINEER's previous comments shall be returned marked "Rejected." No further review by the ENGINEER shall be performed until responses are made to all comments.

5. Assembly and construction drawings for each alarm annunciator, local indicating panel and for other special enclosed assemblies for field installation: These drawings shall include dimensions, identification of all components, surface preparation and finish data, nameplates, and the like. These drawings also shall include enough other details, including prototype photographs, to define exactly the style and overall appearance of the assembly; a finish treatment sample shall be included.

6. Installation, mounting, and anchoring details for all components and assemblies to be field-mounted, including conduit connection or entry details shall be shown in the submittal drawings.

7. A Bill of Material shall be submitted for each field mounted device or assembly as well as cabinet assemblies and subassemblies. Bills of Material shall include all items within an enclosure. The submittal shall be a complete and detailed bill of materials. An incomplete submittal shall be rejected, and no further evaluation performed until a completed and detailed bill is submitted.

E. Organization and Binding of Shop Drawings: The organization of the initial shop drawings submittal shall be compatible to eventual inclusion with the technical manuals submittal and shall include final alterations reflecting "As Built" conditions. Accordingly, the final approved multiple-copy shop drawing submittal shall be separately bound in 3-ring binders of the type specified in Section 01782 Technical Manuals of the GENERAL REQUIREMENTS.

F. Technical Manuals: In addition to updated shop drawing information to reflect actual existing conditions, each set of technical manuals shall include installation, connection, operating, troubleshooting, maintenance and overhaul instructions in complete detail. This shall provide the CITY with comprehensive information on all systems and components to enable operation, service, maintenance and repair. Exploded or other detailed views of all instruments, assemblies and accessory components shall be included together with complete parts lists and ordering instructions. Technical Manuals shall be in accordance with and/or for additional requirement see Technical Manuals Section 01782, of the GENERAL REQUIREMENTS.

G. Control Panel Engineering Submittal: The Instrumentation and Control System Subcontractor shall submit a control panel engineering submittal (CPES) for each control panel being provided under this Specification Section. The CPES shall completely define and document the construction, finish, layout, power and UPS circuits, signal and safety grounding circuits, fuses, circuit breakers, signal circuits, switches, surge protectors, internally mounted instrumentation components, faceplate mounted instrumentation components, internal panel arrangements, and external panel arrangements. All panel drawings shall, as a minimum, be ANSI "B" size (11" X 17") with all data sheets and manufacturer specification sheets being ANSI "A" size (8 1/2" X 11"). The submittal shall be in conformance with latest, NEMA Standard ICS 1-1.01, and shall be submitted as a singular complete bound volume or multi-volume package within 120 calendar days after notice to Proceed and shall have the following contents:

1. A complete index shall appear in the front of each bound volume. All drawings and data sheets associated with a panel shall be grouped together with the panels being indexed by systems or process areas. All panel tagging and nameplate nomenclature shall be consistent with the requirements of the Contract Documents.

2. Construction drawings drawn to a 1-1/2-inch = 1-foot scale which define and quantify the type and gauge of fabrication steel to be used for panel fabrication, the ASTM grade to be used for structural shapes and straps, panel door locks and hinge mechanisms, type of bolts and bolt locations for section joining and anchoring, details on the utilization of "UNISTRUT" and proposed locations, stiffener materials and locations, electrical terminal box and outlet locations, electrical access locations, print pocket locations, writing board locations and lifting lug material and locations.

3. Physical arrangement drawings drawn to 1-1/2-inch = 1 foot scale which define and quantify the physical groupings comprising control panel sections, auxiliary panels, subpanels, and racks. Cutout locations with nameplate identifications shall be provided.

4. Schematic/Elementary diagrams shall depict all control devices and circuits and their functions.

5. Wiring/Connection diagrams shall locate and identify electrical devices, terminals, installed Components/Instruments and interconnecting wiring. These diagrams shall show interconnecting wiring by lines, designate terminal assignments, and show the physical location of all electrical and control devices.

6. Interconnection diagrams shall locate and identify all external connections between the control panel/control panel devices and associated equipment. These diagrams shall show interconnecting wiring by lines, designate terminal assignments, and show the physical location of all panel ingress and egress points.

7. Control sequence diagrams shall be submitted to portray the contact positions or connections required to be made for each successive step of the control action.

8. Completed ISA-S20 data sheets for all instrumentation devices associated with each control panel supplemented with manufacturer specification sheets which verify the products conformance to the requirements of the Contract Documents.

9. A bill of material which enumerates all devices associated with the control panel.

H. Test Procedure Submittal: The Instrumentation and Control System Subcontractor shall submit the Procedures proposed to be followed during the tests required under this project. Procedures shall include statement indicating test objectives, test descriptions, forms, and checklists to be used to control and document the required tests. Prior to the preparation of the detailed test procedures, submit outlines of the specific proposed tests. Submittals shall include examples of the proposed forms and checklists. Once the Preliminary Test Procedure Submittals have been reviewed by the ENGINEER and returned stamped either "no exceptions noted" or "make corrections noted", the Instrumentation and Control System Subcontractor shall submit the proposed detailed test procedures, forms, and checklists. Once the detailed Test Procedures Submittals have been reviewed by the ENGINEER and returned stamped either "no exceptions noted" or "make corrections noted", the tests shall be scheduled in coordination with ENGINEER. Upon completion of each required test, a copy of the signed-off test procedures shall be submitted as test documentation. These requirements shall apply to the factory testing of all panels, and all on-site tests.

I. The Instrumentation and Control System Subcontractor shall submit the integrated hardware/communication loop testing results from field to the PLC-01 at the end of project.

J. The organization of the initial shop drawing submittal required above shall be compatible to eventual inclusion with the Technical Manuals submittal and shall include final alterations reflecting "record" conditions. Submittals not organized as described above and incomplete submittals for a given Loop will not be accepted. Accordingly, the initial multiple-copy shop drawing submittal shall be separately bound in standard size, 3-ring, loose-leaf, vinyl plastic, hard cover binders suitable for bookshelf storage. Binder ring size shall not exceed 2-inches.

K. Control Valve Submittal: Submit the following data 90 days after Notice to Proceed:

1. Dimensional Outline and Mounting Details.

2. Diagrams (wiring, schematic, logic, etc.).

3. Certified Performance Data.

4. Calculations for Valve Sizing.

5. Welding procedures and Qualification Test.

6. Cross Sections with Parts List.

7. Non-destructive Testing Procedures.

8. Inspection and Test Plan.

L. Instrument Installation Detail and Submittal: Submit the following data 180 days after Notice to Proceed:

1. Detail and Instrument Installation drawings.

2. Bill of Materials.

3. Prior to acceptance, the control valve suppler shall submit function test verification certifications and hydrostatic leak test certifications.

1.06 QUALITY ASSURANCE

A. Accuracy: The accuracy of each instrumentation system or loop shall be determined as a probable maximum error; this shall be the square-root of the sum of the squares of certified "accuracies" of the designated components in each system, expressed as a percentage of the actual span or value of the measured variable. Each individual instrument shall have a minimum accuracy of ±0.5 percent of full scale and a minimum repeatability of ±0.25 percent of full scale unless otherwise specified. Instruments which do not conform to or improve upon these criteria are not acceptable.

B. Where materials and equipment are specified to conform to the standards of the Underwriter's Laboratories, the label of, or listing with reexamination in latest UL Publication Reference No. 1, shall be accepted as sufficient evidence that the items conform to Underwriter's Laboratories requirements. In lieu of such label, listing of the materials or equipment by a recognized approved testing laboratory as stated in the CITY of Los Angeles Electrical Code will be acceptable as interpreted by the CITY's Department of Building and Safety.

1.07 PRESUBMITTAL CONFERENCE

A. Arrange and conduct a Pre-submittal Conference on the instrumentation and control system work within 15 days after the notice to proceed. The Instrumentation and Control System Subcontractor shall allow one eight-hour working day for the conference. The purpose of the Pre-submittal Conference shall be to informally review with the CONTROL SYSTEM ENGINEER and approve the manner the Instrumentation and Control System Subcontractor intends to respond to the Contract requirements before any submittals are prepared. The Instrumentation and Control System Subcontractor shall prepare the following items for presentation at the Pre-submittal Conference:

1. A list of equipment and materials required for the control system and the manufacturer and model number which the Instrumentation and Control System Subcontractor proposes to use for each item.

2. A list of proposed exceptions to the Specifications and Drawings, along with a brief explanation of each. Approval shall be subject to formal submittal and review by the ENGINEER.

3. An exact one-to-one sample of each type of submittal specified herein.

4. A bar chart type schedule for all system related activities from the Pre-submittal Conference through startup and training, plant acceptance and project closeout. The schedule shall include the dates relative to submittals, design, fabrication, programming, factory testing, deliveries, installation, field testing, and training. The schedule shall be subdivided to show activities relative to each major item or group of items.

5. Provide 3 copies on paper, and 1 electronic copy compatible with City Standard software of Pre- submittal Conference data to the ENGINEER.

B. Keep formal meeting minutes. Prior to adjournment of the conference, all parties must concur in writing with the accuracy of the minutes.

C. Prime Contractor shall complete shop drawing submittals for any long-lead, schedule-critical items within 30 days of pre-submittal conference. Shop drawings shall not be submitted until after the Pre-submittal Conference. Submittals required for that conference are exempted.

1.08 GUARANTEE

A. The Instrumentation and Control System Subcontractor shall guarantee all equipment and installation, as specified herein, for a period of one year following the date of completion of the work. To fulfill this obligation, the Instrumentation and Control System Subcontractor shall utilize technical service personnel designated by the Instrumentation and Control System Subcontractor to which the Instrumentation and Control System Subcontractor originally assigned project responsibility for instrumentation. Services of a non-critical nature shall be performed within 5 calendar days after notification by the CITY, and critical services (as determined by the ENGINEER) within 24 hours after notification.

1. Equipment, software, and materials which do not achieve design requirements after installation shall be replaced or modified to attain compliance at no additional cost to the CITY. Following replacement or modification, retest the system and perform any additional procedures needed to return/restore complete system to satisfactory operation at no additional cost to the CITY and obtain design compliance approval from the ENGINEER.

2. All parts, materials (excluding consumables), labor, travel, subsistence, or other expenses incurred in providing all services and service visits during the one-year warranty period shall be included in the Bid.

1.09 MANUFACTURER'S REPRESENTATIVE SERVICES

A. Provide jobsite visits and services of a manufacturer's technical field representative for the following items of equipment for calibration, testing and start-up:

1. Flowmeter.

2. Programmable controller, HMI.

3. Any process sensing and indicating devices.

4. Valve and gate actuators.

B. Provide the following services of qualified technical representatives (see Installation, Calibration, Testing, Pre-commissioning, Start-up, and Instruction herein):

1. Install and connect all instruments, all elements, and all components of every system, including connection of instrument signals to primary measurement elements and to final control elements such as pumps, valves, and chemical feeders.

2. Make all necessary adjustments, calibrations hardware/software interfacing and tests, as called out in Part 3 of this Specification, and drawings. The results shall be logged and witnessed on test sheets supplied in this section or provided by the Contractor at the option of the ENGINEER.

3. Instruct Plant operating and maintenance personnel on the instrumentation. This time shall be in addition to whatever time is required for other facets of work at the site and shall be during the CITY's normal working days and hours.

1.10 SHOP INSPECTION

A. Shop Inspection and Performance Testing: Arrange for shop inspection and performance testing of the equipment according to Section 11000 Equipment General Provisions.

1. All equipment shall be subject to shop inspection in accordance with Section 01453 Sampling, Testing and Fabrication Inspection of the GENERAL REQUIREMENTS.

2. The equipment shall be performance tested and witnessed by the INSPECTOR and/or CITY Control Systems ENGINEER of Record in accordance with Section 01453 Sampling, Testing and Fabrication Inspection of the GENERAL REQUIREMENTS. The INSPECTOR and/or CITY Control Systems ENGINEER of Record shall inspect and participate in the factory testing of all panels fabrication shop/factory prior to shipment.

   a. Performance testing shall be conducted at the Manufacturer's shop or factory.

3. For all equipment, obtain and submit the following to the ENGINEER at least 6 weeks before test date for approval:

   a. The Manufacturer's factory test procedure, including report forms, and testing schedule prior to equipment testing.

   b. Obtain and submit to the ENGINEER for approval the final factory test reports prior to shipping of equipment.

   c. Shop testing of the equipment shall be defined as operation of all panels with simulated input/output. The purpose of the shop test shall be to test mechanical, electrical/control, and instrumentation systems. Verify compliance with the Contract Specifications and drawings and intended design function and make any necessary adjustments or repairs prior to shipment. Simulation of faults and trips from the control panel shall be included. If all panels are to be stored at the Prime Contractor's facility, the shop test shall be successfully completed prior to storage. All panels shall not be shipped until they have been successfully shop tested.

B. Field Performance Test and Reports: All equipment shall be performance tested after installation at the field operating site according to Section 11000 Equipment General Provisions.

1. Testing shall not start until all preliminary checks and calibrations have been completed, the installation has been certified ready for testing by the Manufacturer's representative, and the test forms and procedures have been approved by the ENGINEER.

2. All test information shall be recorded on forms provided by the CITY or approved by the ENGINEER. If forms are not available from the CITY, prepare test forms and submit for approval prior to the scheduled start of the test.

3. Submit the test procedure for approval prior to the scheduled start of the test.

4. Prepare a field performance test report, including all raw data, and submit the report within 14 calendar days after approved completion of the equipment field test.

1.11 PERSONNEL TRAINING; REFER TO GENERAL REQUIREMENTS, SECTION 01820 OPERATIONS AND MAINTENANCE TRAINING.

A. Provide a comprehensive manufacturer training program for CITY personnel in the operation and maintenance of the equipment covered by Section 17400.

1. The training program shall be divided into at least two (2) separate sessions, namely:

   a. Operations Training: To be conducted during the CITY's overall process training sessions.

   b. Maintenance Training: To be conducted during or after the start-up and commissioning phase of the project.

   c. Include training for programming and operation of installed PI & Cs.

2. The training program shall be composed of the following elements:

	Number of 8-Hour Sessions:	Number of CITY Personnel Attending each Session
OPERATIONS	2	10
MAINTENANCE	2	10

3. Two classes will need to begin after 3:00 pm to accommodate City's night shifts.

4. Submit the Manufacturer training program to the ENGINEER for approval.

5. The Manufacturer training program shall be in accordance with Section 01820 Operations and Maintenance Training of the GENERAL REQUIREMENTS and as specified herein.

PART 2 - PRODUCTS

2.01 GENERAL

A. Provide all instrumentation and related wiring as specified on any of the following instrumentations and electrical documents:

1. Instrument Location Drawings, Instrument Index, Instrument Data Sheets, Loop/Logic Diagrams, I/O Tabulation, Loop Description, One-Line Electrical Diagrams, and/or as indicated on any other Contract Document.

2. Indication of required instrumentation work on any of these Contract Documents shall require supply and installation of the instrument and related wiring, supports, accessories and appurtenances, etc., at no additional cost to the CITY.

3. Assume full responsibility to perform all engineering to select, furnish, install, program, test, calibrate, and place into operation all instrumentation, control panels, programmable controllers, and hardware/software interfacing with existing Plant DCS, for a complete and functional system.

B. The monitoring and control system configurations indicated are diagrammatic. The locations of equipment are approximate unless dimensioned. The exact locations and routing of wiring and cables shall be governed by structural conditions and physical interferences and by the location of electrical terminations on equipment. All equipment shall be located and installed so that it will be readily accessible for operation and maintenance. The CITY reserves the right to require minor changes in location/orientation of equipment prior to roughing in without incurring any

additional costs or charges. The Instrumentation and Control System Subcontractor shall review the existing site conditions and examine all shop drawings for the various items of equipment in order to determine terminations for all wiring and cables. All deviations from the Drawings or Specifications must be approved in writing by the ENGINEER.

C. All meters, instruments, and other components shall be new and un-used, and the most recent field- proven models marketed by their manufacturers at the time of submittal of the shop drawings unless otherwise specified to match existing equipment.

D. All panel mounted instruments shall have matching style and general appearance. Instruments performing similar functions shall be of the same type, model, or class, and shall be of one manufacturer.

E. All instrumentation shall be rated for operation in the ambient conditions at the equipment installation locations. 316 Stainless Steel NEMA 4X rated enclosures suitable for the environment shall be furnished in all general purpose areas.

F. All instrumentation in hazardous areas shall be approved for use in the particular hazardous classification in which it is to be installed, and shall at a minimum be NEMA 4X. Use intrinsic safe barriers as needed for switch contacts or analog instruments located in classified areas.

G. Analog measurements and control signals shall be electrical as indicated herein and shall vary in direct linear proportion to the measured variable, except as otherwise noted. Electrical signals outside control board(s) shall be 4 to 20 milliamperes dc except as noted. Signals within enclosures may be 1-5 volts dc. Dropping resistors shall be installed at all field side terminations in the control panels to ensure loop integrity.

H. All control panels shall be provided with redundant power supplies which are configured in a fault-tolerant manner to prevent:

1. Interruption of service upon failure.
2. Interruption of service necessitated by the replacement of a power supply.
3. All power supplies shall have an excess rated capacity of forty (40) percent.

I. Each signal and control loop shall be individually fused.

J. Equipment or methods requiring redesign of any project details are not acceptable without prior approval of the ENGINEER. Any changes inherent to a proposed alternative shall be at no additional cost to the CITY. The required approval shall be obtained in writing by the Instrumentation and Control System Subcontractor prior to submittal of shop drawings and data. Any proposal for approval of alternative equipment or methods shall include evidence of improved performance, operational advantage and maintenance enhancement over the equipment or method specified or shall include evidence that a specified component is not available. Otherwise, alternative equipment (other than direct, equivalent substitutions) and alternative methods shall not be proposed.

K. All field mounted instruments and control equipment/enclosures mounted outside of protective structures shall be equipped with suitable electrical surge protective/arresting devices to protect the equipment from damage due to electrical transients induced in the interconnecting lines from lightning discharges or nearby electrical devices. Protective devices used on 120V ac inputs to field mounted equipment shall be secondary surge protectors conforming to the requirements of latest IEEE Standard 28-1982 (latest ANSI C62.1), and UL 1449 latest edition.

L. Provide all equipment, material, labor supervision, consumables, scaffolding, etc., for the installation of the instrumentation systems in accordance with the Drawings and Specifications listed herein.

1. Provide field engineering design, as required, for mounting and supporting details of all field mounted components.

2. Provide coordination, as required, between manufacturer's drawings and contract installation drawings.

3. Provide any additional schematic and interconnection diagrams that may be required to facilitate erection or to complete the installation of equipment.

4. Assemble and make interconnection of instruments disconnected for shipping purposes.

5. Remove all temporary supports, bracing or other foreign objects that were installed in instruments, control panels or other equipment to prevent damage during shipping, storage and/or erection.

6. Prime Contractor shall coordinate his work with that of the different trades so that interference between conduit, piping, equipment, architectural and structural work shall be avoided.

7. Install and support all instruments and instrument piping related to this project not installed and supported by others. Furnish all hardware and stands required to mount these items and modify to meet actual site conditions.

8. All piping shall be field measured prior to fabrication/or erection. Any significant discrepancies between drawings and field measurements shall be reported to the ENGINEER. The CITY shall not be responsible for any costs for rework caused by failure to field measure prior to initiating fabrication.

9. Adequately support and protect capillary tubing. All extra tubing shall be carefully coiled, tied, and protected at the instrument.

M. The equipment loop, logic and elementary diagrams are based on non-certified vendor information and indicate minimum scope of supply from the equipment manufacturer. Include additional costs in the Bid to add additional instruments, wiring, computer inputs/outputs, controls, conduit, interlocks, electrical hardware and similar items, into the design based on equipment manufacturer's final certified vendor prints. Revise or produce new loop, logic, and elementary diagrams to meet the equipment manufacturer's wiring requirements. Such changes to instrumentation and electrical work shall be incorporated into the scope of work at no additional cost to the CITY.

N. Provide the following:

1. Installation, wiring, termination, and installation tests for all analog instruments, local control panels, Control System Interfaces (CSIs), panels and equipment furnished by the CITY.

2.02 SPARE PARTS

A. Obtain and submit from the manufacturer a list of suggested spare parts for each piece of equipment according to the provisions of Section 01781 Spare Parts of the GENERAL REQUIREMENTS.

B. Furnish the name, address, and telephone number of the nearest distributor for each piece of equipment.

C. During the term of this Contract, notify the ENGINEER in writing about any manufacturer's modification of the approved spare parts, such as part number, interchangeability, model change or others. If the ENGINEER determines that the modified parts are no longer applicable to the supplied equipment, provide applicable spare parts and/or replace the equipment to ensure compatibility of the items furnished.

2.03 CONTROL PANELS

A. General:

1. The Instrumentation and Control System Subcontractor shall furnish, supply and install all control panels PLC-01 and enclosures for this project needed for complete installation of instrumentation and control equipment as shown on the drawings and specified herein.
2. All panels PLC-01 and enclosures shall be rated NEMA 4X.
3. Front of panel layouts for all control panels PLC-01 shall be submitted to the ENGINEER for review and approval prior to start of fabrication.
4. Dimensions shall be in accordance with manufacturer's requirements. Elevations and horizontal spacing shall be subject to ENGINEER's approval.
5. Furnish, supply and install all control panels PLC-01 for this project in accordance with the below listed specifications. This also covers requirements for local control panels being supplied by the Equipment Manufacturers.
6. This Specification covers the requirements for the fabrication of instrument panel boards, mounting, finishing, piping and wiring of instrument equipment.
7. Front of panel layouts for all control panels PLC-01 shall be submitted to the ENGINEER for review and approval prior to start of fabrication. Refer to other requirements as outlined in Paragraph O-Drawings section below.
8. All conduit entries shall utilize Myers hubs or equivalent and shall be made watertight at the point of entry into the cabinet with O-ring or gasket seals. In runs of PVC coated conduits, the hubs shall also be PVC coated in accordance with the conduit manufacturers requirements for fittings and accessories (i.e., Rob Roy Plasti-Bond 2 Red Hot PVC coated Rigid galvanized steel (PVC RGS) or equal.
9. For panels and enclosures with NEMA ratings of 2, 3, 3S, 3R, 4, 4X, 6 and 12, all conduit entries shall be Myers hubs or equivalent.

B. Mounting of Instruments:

1. The panel vendor shall provide cut-outs, and shall mount all instrument items shown or specified to be panel mounted, including any instruments specified to be furnished by other vendors but installed in panel (if applicable).
2. The panel vendor shall also mount, behind the panels, other instrument accessory items as required and/or specified.
3. Enclosure for all the front panel mounted instruments shall be NEMA 4X rated. Instruments which are not rated NEMA 4X shall be covered with a windowed door to provide overall NEMA 4X rating.
4. Rear of panel mounted equipment shall be installed with due regard to accessibility, commissioning adjustments, servicing requirements and cover removal.
5. Spare space shall be kept clear of wiring, to give maximum space for future additions.

C. Electrical Requirements for Control Panels:

1. Furnish and install all the necessary conduit, wireways, switches, and electrical fittings with wire for all circuits to instruments and other panel electrical devices to assure a complete and acceptable installation.

2. Signal and low voltage wiring shall be run separately from power and 120-volt control wiring.

3. Conduit, wireways, junction boxes and fittings shall be installed for all signal/instrument wires, all thermocouple or resistance thermometer lead wire. Conduit and wireway runs shall include those required between sensors and temperate indicators and between the thermocouple wireway and junction boxes to instruments.

4. Each terminal connection shall have a plastic plate with a terminal and instrument tag number. All wiring shall be identified with permanent machine printed tubular wire markers.

5. Freestanding panels shall be provided with switched LED (9 WATT) back-of-panel lights with built-in diffuser to prevent bright spots and shadows. One light shall be provided for every 4-feet of panel width and shall be mounted inside and in the top of the back-of-panel area.

6. Freestanding panels shall be provided with a 15-amp, 120-volt, ground fault interrupted (GFI) service outlet circuit within the back-of-panel area. The circuit shall be provided with three-wire, 120-volt, 15-ampere, duplex receptacles, one for every 4-feet of panel width (two minimum per panel) and spaced evenly along the back-of-panel area.

7. Smaller panels shall be so sized as to adequately dissipate heat generated by equipment mounted in or on the panel.

8. Provide a hand switch controlled 100-watt incandescent light and a breaker protected 120 volt, 15-amp duplex receptacle within each smaller panel.

9. Thermostatically controlled refrigeration type air conditioning shall be provided where necessary to prevent overheating of the equipment enclosed.

10. For all control panels, provide heat-load calculations from the cabinet manufacturer for sizing heaters and air conditioners and for setting thermostats. In general, interior cabinet temperatures shall not exceed 80°F and shall not fall below 60°F unless otherwise recommended by the manufacturers of instrumentation and control equipment to be housed in the control panels.

D. Wiring Methods:

1. Wiring methods and materials for all panels shall be in accordance with the N.E.C. requirements for General Purpose (no open wiring), unless otherwise specified. Open wiring in closed cabinet type panels is allowed when specified in the material specifications. Unless otherwise specified by the material specification, design and installation of materials shall conform to the requirements of the latest edition of the following standards and codes as a minimum.

   a. The National Electrical Code.

   b. City of Los Angeles Electrical Code.

   c. All National Safety Codes.

   d. American Petroleum Institute Standard RP-550.

   e. Applicable Local Law and Regulations.

2. Unless otherwise specified by the material specifications, all instruments, alarm systems and motor controls shall operate on 120 VAC, 115-volt, 60-Hertz and/or 24 VDC circuits.

3. At a location on the top or bottom of the panel, the panel fabricator shall furnish and install terminal block connections for the main power supply entry.

4. Power Supply switches for alarm units shall be three-pole type, arranged to open both the power and alarm circuits. Each annunciator shall be equipped with a separate switch.

5. Instruments located on the same panel section and serving the same process unit may be connected to a common branch circuit from the power supply. The numbers of circuits that depend on the circuit load are as noted in the contract documents. A 15-amp, two-pole circuit breaker shall be provided in each branch circuit. The circuit load shall not exceed 10 amps. Different panel sections or different process units shall not use common branch circuits.

6. When instruments do not come equipped with integral fuses, the panel fabricator shall furnish and install fuses as required for the protection of individual instruments against fault currents. Fuses shall be mounted on the back of the panel, in DIN rail, fused terminal blocks with knife-blade disconnect switch, blown fuse indicator (LED) and screw terminals for connecting circuit wiring and each fuse identified by a service name tag. Fuses shall be as manufactured by:

   a. Eaton/Cooper Bussman;

   b. Schneider/Square D;

   c. Or equal.

7. Where alarm units are single unit types, one switch may be used to disconnect not more than six alarm units located on the same or adjacent panels.

E. Material:

1. Wire for all 120 volt signals shall be No. 14 AWG stranded with lugs with Type THWN or THHN insulation. All terminals for external wiring connections shall be suitable for wire size Nos. 16 through 12 AWG.

2. Flexible conduit shall not be allowed except when specifically approved by the ENGINEER in writing.

3. Conduit fittings shall be cast metal fittings as specified in the electrical specifications Section 16110**,** with PVC coating.

4. Splicing of wires in conduits shall not be permitted. All wire terminations/connections shall have crimped wire lugs and shall be landed terminated on strips or blocks in pull boxes or panels.

5. For case grounding, panels shall be furnished with a 1/4" x 1" copper ground bus complete with solderless connectors for one No. 4 AWG bare stranded copper cable. The copper cable shall be furnished and installed and connected to a system ground loop/ground rod.

F. Electrical Locations:

1. When Contract Drawings or Specifications call for thermocouple actuated instruments, the thermocouple lead wire shall be installed, without junction or splicing. The panel vendor shall furnish dedicated empty conduit or wireway running from the instrument(s) to the top or bottom of the panel as called for in the material specifications or as

otherwise required. Sizing of the conduit or wireway shall be in accordance with the capacity and number of instrument wires of the instrument(s).

2. Terminal boxes for incoming and outgoing signal leads shall be located at the top or bottom of the panel as specified in the material specification, or as otherwise required.

G. Panel Annunciation:

1. Unless otherwise noted, the following color code and inscriptions shall be followed for the lenses of all indicating lights:

STATUS	INSCRIPTION(S)	COLOR
ON	ON	RED
OFF	OFF	GREEN
OPEN	OPEN	RED
CLOSED	CLOSED	GREEN
LOW	LOW	RED
FAIL	FAIL	RED
HIGH	HIGH	RED

2. Lettering shall be black on white and amber lenses. Lettering shall be white on red and green lenses.

3. Unless otherwise noted, the following color codes and inscriptions shall be followed for all pushbuttons:

LABEL/ABBREV.	INSCRIPTION(S)	COLOR
OO	ON/OFF	RED/GREEN
OC	OPEN/CLOSE	GREEN/AMBER
OCA	OPEN/CLOSE/AUTO	GREEN/AMBER/BLUE
OOA	ON/OFF/AUTO	RED/GREEN/AMBER
MA	MANUAL/AUTO	AMBER/BLUE
SS	START/STOP	RED/GREEN
E-STOP	EMERGENCY STOP	RED
RESET	RESET	BLACK

4. All unused or non-inscribed other buttons shall be black. Lettering shall be white on black labels and nameplates. Lettering shall be white on black, red, and green buttons.

H. Construction Methods:

1. Materials: Type 316 Stainless Steel shall be standard. Other types may be proposed in writing for use in specific service locations but must be reviewed and approved in writing by the CITY and ENGINEER.

   a. Panel section faces shall be #10 gauge minimum thickness, 316 SS for free standing panels and #14 gauge minimum thickness 316 SS for smaller panels. All materials shall be selected for levelness and smoothness.

   b. Relay rack high density type panels shall utilize standard relay racks with 14 gauge 316 SS frame and supports.

   c. Structural Shapes and Strap 316 SS: ASTM A-283.

   d. Bolting Material: Commercial quality carbon steel bolts, nuts and washers, all 1/2-inch diameter with UNC threads. Carriage bolts shall be used for attaching end plates. All other bolts shall be hex head machine bolts. All nuts shall be hot pressed hex, American Standard, heavy. Standard wrought washers shall be used for foundation bolts and attachments to building structures. All other bolted joints shall have S.A.E. standard lock washers.

2. Construction:

   a. All dimensions shall be in accordance with Vendors' requirements and as required in the Contract Documents.

   b. The elevations and horizontal spacing shall be subject to the ENGINEER's approval.

I. Fabrication Requirements:

1. End plates, top plates and top closure panels (to hung ceiling) shall be furnished when required by the material requisition. End plates, top plates and top closure panels shall be removable with countersunk bolts to match panels. Top closure panels shall be furnished in lengths which match the widths of standard panels, except that one top closure panel may extend across two 4-feet 6-inches wide or five 2-feet 0-inches wide standard panels. The vertical joints of these panels shall align with the vertical joints of the standard panels.

2. End closure or rear closure doors shall be provided when specified. Such doors shall be flush fitting and gasketed and be of the hinged lift-off type with lockable door handles. A common key shall be provided for all doors on one panel assembly. Where removable access panels are specified they shall be furnished with dished handle fasteners. Screwdriver 1/4 turn or Dzus type fasteners are not acceptable. Handles of adequate size, strength and number (provide in pairs with 2 minimum), shall be furnished and installed on each lift-out section to give a lifting effort of not more than 25 pounds per handle based on the weight of the panel section. Handles shall have padded non-slip surfaces for secure gripping to avoid accidents, and shall be large enough size to enable use of workman's gloves and adequate strength that there will be no bending or deformation in use even when sustaining twice the maximum indicated load.

3. The flanged edges of all panels shall be straight and smooth. Corners shall be welded and ground smooth.

4. The face of the panel shall be true and level after flanging.

5. All panel cut-outs and holes shall be cut or drilled by a method that will not cause deformation, scarring or overheating of the surface. Burrs and sharp edges shall be ground smooth.

6. All seams shall be welded and ground smooth. There shall be no exposed sharp edges on the inside or outside of the enclosure.

7. The cabinet bottom flange for anchoring to the foundation pad shall be rolled (not welded) from the vertical walls of the cabinet and shall run around the entire inside perimeter of the enclosure at the manufacturer's standard width.

8. Adjacent panels shall assemble with faces flush. Gaps or cracks shall not be visible from the front of the assembled instrument board.

9. Stiffeners shall be welded to the back of panels as required to prevent panel deformation due to the weight of panel mounted instruments.

10. Data pocket shall be high impact thermoplastic.

11. Panel doors shall have Heavy duty 1/4 turn 3-point latching mechanism constructed of 316L stainless Steel, with nylon rollers at the end of latch rods.

12. Panels shall be self-supporting as defined below.

J. Frameworks and Supports:

1. The rear of each panel section shall have a 316 SS framework assembled to it for supporting conduit, tubing, wireways, switches, air piping and all instrument accessory items such as relay or terminal enclosures, transducers, pressure switches, valves and air relays. The main framework shall be constructed of standard structural shapes. Special shapes such as 316 SS "Unistrut" may be used for secondary supports. Framework must not interfere with instrument connections or access needed for maintenance or adjustments.

2. Steel framework shall extend 2-feet 8-inches back of the panel face, or as specified in the material requisition. Where specified, individual adjustable leg supports shall be provided at the back of the framework so that the entire panel shall be self-supporting.

3. Two removable lifting lugs shall be provided and shall be designed for moving the fully assembled control panel sections without causing distortion or bending.

K. Preparation of Panel Surface (following shall not apply to 316 stainless steel):

1. The surface of the panel shall be prepared for finishing in a manner equal to that described below. The entire surface shall comprise the front and rear face of the panel top and bottom, both sides and the edges of all flanges, and the periphery of all holes or cut-outs.

2. All high spots, burrs, and rough spots and sharp edges shall be ground smooth.

3. The surfaces shall be sanded or sandblasted to a smooth, clean bright finish.

4. All traces of oil shall be removed with solvent.

5. The first coat of primer shall be applied immediately.

L. Panel Finishing (does not apply to 316 Stainless Steel):

1. A thin coat of primer shall be applied over the entire panel surface. Minimum dry film thickness of primer coat shall be 1 mil.

2. A primer surface shall be applied on the front of the panel only. Minimum dry film thickness of primer coat shall be 1 mil.

3. Wet sand to smooth clear finish and then dry.

4. At least two coats of air-dry, epoxy paint shall be applied over the entire surface. Dry film thickness of lacquer enamel shall be 1 to 2.5 mil. Color to be as approved by the ENGINEER.

5. Supply two one-pint containers of air drying, matching paint for field touch-up of the panel face.

M. Instrument Finishing:

1. The final coats applied to painted surface of instrument cases, doors, or bezels which are visible from the front of panels shall be manufacturer's standard unless otherwise specified.

2. Black japan or "crinkle" finishes on instrument cases are not acceptable.

N. Preparation for Shipment and Shipping:

1. All panels shall be crated for shipment using a heavy framework and skids.

2. The panel sections shall further be cushioned satisfactorily to protect the finish of the instruments and panel during shipment.

3. All instruments which are shipped with the panel shall further have suitable shipping stops and cushioning material installed in a manner to protect instrument parts which could be damaged due to mechanical shock during shipment.

4. Each separate panel unit shall be provided with removable lifting lugs to facilitate handling.

5. All shipments shall be by air ride van, unless otherwise specified or approved.

O. Labor and Workmanship:

1. All panels shall be fabricated, piped and wired by fully qualified workers who are properly trained, experienced and supervised.

2. All personnel used on the project shall be subject to CITY approval.

P. Drawings:

1. Furnish copies of preliminary drawings for approval. These drawings shall include:

   a. Complete panel layouts showing all outside dimensions, locations and dimensions of panel cutouts, locations of back of panel stiffeners, and panel face drawings to exact scale.

   b. Terminal point locations with coded identification for wiring, and piping connections (includes all pneumatic transmission lines).

   c. Back of panel piping.

   d. Back of panel wiring, including dimensioned location of connections.

2. Fabrication of panels, piping and wiring shall not proceed without the CITY's written release for fabrication or approval of shop drawings by the ENGINEER.

3. The ENGINEER's requirements for final certified drawings include final approved copies of the above described shop drawings as well as certified drawings of instrument equipment furnished by the panel fabricator.

4. The number of copies of final certified drawings required by the ENGINEER and the required procedure for identification of these drawings are covered by Section 01330 Shop Drawings and Submittals, of the GENERAL REQUIREMENTS.

Q. Inspection and Approval:

1. Panel fabricator must carry out the following tests prior to arrival of the ENGINEER and the INSPECTOR for factory testing (FAT):

   a. All air lines shall be purged and adequately tested for leaks.

   b. All alarm circuits shall be rung out to determine their operability and proper function.

   c. All electrical circuits shall be checked for continuity and where applicable, proper function.

   d. All nameplates shall be checked for correct spelling and correct size of letters.

   e. Perform any/all other tests needed to place the control panel in proper operating condition.

2. Furnish all necessary testing devices and manpower to perform the tests required by the ENGINEER and the INSPECTOR.

3. If the above tests have not been performed and confirmed prior to the arrival of the ENGINEER and the INSPECTOR, the Prime CONTRACTOR shall be liable for back charges by the ENGINEER for the extra time required for the inspection services.

R. Photographs:

1. Fabricator shall furnish two (2) copies of 8 x 10 glossy photographs of the front, rear and all interior wiring and devices of the finished panel for the ENGINEER's record.

2. Additional photographs shall be provided at the ENGINEER's request where needed for proper documentation.

3. Photos shall be taken in digital format and shall be provided to the ENGINEER in both hard copy and digital form.

2.04 GENERAL ENCLOSURE COMPONENTS

A. Signal Isolators, Converters, and Power Supplies: Signal isolators shall be furnished and installed in each measurement and control loop, wherever required, to ensure adjacent component impedance match, or where feedback paths may be generated or to maintain loop integrity when the removal of a component of a loop is required. Signal converters shall be included where required to resolve any signal level incompatibilities. Signal power supplies shall be included, as required by the manufacturer's instrument load characteristics, to ensure enough power to each loop component.

1. Phoenix Contacts;

2. Eaton;

3. Schneider;

4. Or equal.

B. General Purpose Relays: General purpose relays in the Control Panel (s) shall be plug-in type with 2DPDT Form C contacts rated 10 amperes at 120 VAC. Each relay shall be enclosed in a clear plastic heat and shock resistant dust cover and equipped with retention hardware, relays

shall also include manual test button, LED status light and hold-down clip. Sockets for relays shall have screw type terminals. Relays shall be:

1. Phoenix Contacts;
2. Eaton;
3. Or equal.

C. Time Delay Relays: See Section 16100 Basic Electrical Materials and Methods. Time delay relays shall be electric on-delay or off-delay type, with Form C contacts rated 10 amperes at 120 VAC. Units shall include adjustable dial with graduated scale covering the time range in each case. Time delay relays shall be:

1. IDEC;
2. Or equal.

D. Interposing/Slave Relays: Additional relays (interposing/slave relays) shall be installed and wired when the number or type of contacts indicated exceed the contact capacity of the specified relays and timers or to isolate field voltages. These relays shall be like general purpose relays as indicated in Paragraph "B" above.

E. Circuit Breakers: Circuit breakers shall be single pole, 120 VAC, 15 ampere rating, or as required to protect wires and equipment and mounted inside the panels. Branch circuit breakers in control panels shall be miniature, DIN rail mounted.

F. Nameplates/tag numbers: Nameplates/tag numbers shall be provided for instruments, function titles for each group of instruments, and other components mounted inside cabinets and on the front panel(s) as shown.

1. A nameplate and tag number shall be provided for each signal transducer, signal converter, signal isolator, each electronic trip, and the like, mounted inside the panel(s).
2. They shall be descriptive, to define the function and system of such element.
3. These nameplates/tag numbers shall be of the same material as those on the front of the panel(s).
4. The nameplates/tag numbers shall be descriptive to define the equipment tag, function and system.
5. The nameplates/tag numbers shall be made from phenolic material 1/8-inch thick having a black exterior and white center.
6. Nameplates shall be fastened with stainless steel machine screws, or epoxy adhesive where penetrations to the panel are not permitted by the NEMA rating (i.e., NEMA 4/4X).
7. Tag numbers for instruments and equipment numbers for machinery shall be coded to CITY numbering system**.**
8. Nameplates/Tag numbers shall be fabricated from Laminated plastic, 316 stainless steel**.** Colors, lettering, styles, abbreviations and sizes shall be in conformance with latest ISA-RP-60.6(1984) standard with an intended viewing distance of three (3) to six (6) feet as shown or as selected by the ENGINEER.

9. Instrument tags made of 316 stainless steel shall be provided and installed for all field instruments located:

    a. Outdoors.

    b. In utility trenches or below-grade vaults.

10. The Tags shall be stamped or engraved with the instrument Tag Number shown on the Contract Drawings and shall be attached to the instrument with Type 316 stainless steel wire. Otherwise the Tags shall be made of engraved laminated plastic material (see Nameplates above) and shall be attached to the instrument with black zip ties guaranteed for sunlight exposure by the manufacturer.

11. Before being produced, submit a list indicating the wording and tag numbering of all equipment identification Nameplates/Tags along with a sample to the Engineer for approval.

G. Terminal Blocks: Terminal blocks shall be molded plastic with barriers and box lug/compression screw terminals and shall be rated 15 amperes at 600-volts. White marking strips, fastened securely to the molded sections, shall be provided and wire numbers or circuit identifications shall be marked thereon. Terminal blocks shall be:

1. Automation Direct;

2. Eaton;

3. Or equal.

H. Selector and Pushbutton Switches: Selector and pushbutton switches shall be 30 mm, rated 10-amperes at 600 volts, shall be heavy-duty, oil-tight, with metallic bezels, and shall have the number of positions and poles indicated. Operators shall be nickel or chrome plated. Switches shall be:

1. Eaton;

2. Schneider;

3. Or equal.

I. Indicating Lights: Indication lights shall be high-brightness LED, push-to-test type, and shall be NEMA 12 heavy-duty, oil tight. Each light shall have a screwed-on glass prismatic lens approximately one-inch in diameter. Each light shall have a factory-engraved legend plate, as shown on the Drawings. Indicating lights shall be:

1. Eaton;

2. Schneider;

3. Or equal.

J. Signal and Control Circuit Wiring:

1. Wire type and sizes: Conductor shall be flexible stranded copper machine tool wire; these shall be UL listed Type MTW and shall be rated 600-volts. Wires for instrument signal circuits and alarm input circuits shall be No. 14 AWG. All other wires, including shielded cables, shall be No. 16 AWG minimum.

2. All signal and low voltage wiring shall be run in separate conduits from power supply and 120V control wiring.

3. Analog signal, digital signals and power wiring shall each be run in separate conduits.

4. Intrinsically safe wiring internal to a cabinet shall be segregated from non-intrinsically safe as required by NEC Article 504.30. Intrinsically safe wiring conductor insulation shall be light-blue. This color shall be reserved for intrinsically safe circuits. Intrinsically safe circuit terminals shall be identified as required by NEC Article 504.80.

5. Wire Insulation Colors: Conductors supplying 120 VAC power on the line side of a disconnecting switch shall have a black insulation for the ungrounded conductor. Grounded circuit conductors shall have white insulation. Insulation for ungrounded 120 VAC control circuit conductors shall be red. All wires energized by a voltage source external to the Control Panel(s) shall have yellow insulation. Insulation for all DC conductors shall be blue, except light blue reserved for intrinsically safe wiring.

6. Wire Marking: Each signal, control, alarm, and indicating circuit conductor connected to a given electrical point shall be designated by a single unique number which shall be shown on all shop drawings. These numbers shall be marked on all conductors at every terminal using white numbered wire markers which shall be plastic-coated cloth or shall be permanently machine marked heat-shrink plastic and easily visible and readable. Instrumentation field wire numbers shall incorporate the instrument tag and loop number. Manufacturers shall be:

    a. Raychem/Kroy Cable Marking;

    b. Brady- Permasleeve White Polyolefin (B-342 with BMP21 labeler);

    c. Or equal.

K. Painting: Control Panel(s) shall be thoroughly cleaned and sand blasted per Steel Structures Painting Council Specification SSPC-SP-6 (Commercial Blast) after which surfaces shall receive a prime coat having a dry film thickness of 3-mils, for a total thickness of the complete system of 6 mils. The finished color of the outside surfaces will be selected by the CITY, unless otherwise specified. The inside surfaces shall have a white finish coat.

2.05 EQUIPMENT SPECIFICATIONS

A. Level sensor and transmitter - ultrasonic:

1. The system shall use ultrasonic ranging to measure the level of liquid and shall consist of a sensor with interconnecting cable and control transmitter unit which can be located up to 1,000 feet from the sensing unit. Sensor with integral cable and a transmitter/controller shall be provided. Level sensing shall be automatically compensated over the system temperature range of at least 0 to 50 degrees Celsius and shall incorporate non-linear digital filtering and moving average techniques to reduce noise and atmospheric interference. Transmitter shall be microprocessor based. Calibration shall require no reference targets. Accuracy shall be 1 percent or better. In the case of momentary signal loss, relays shall maintain their last state. Output shall be 4 - 20 mA plus HART proportional to the range of level sensing. Ultrasonic transmitter shall also have a minimum of five programmable contact rated at 10 amps and 115 VAC outputs (SPDT each) with adjustable set points and dead bands which can be used for pump control. The ultrasonic unit shall be powered by 120 VAC. One hundred (100) ft of transducer to transmitter interconnecting cable shall be provided or as specified in the Instrument Schedule.

2. Sensor:

    a. Encapsulated in a hermetically sealed chemical and corrosion resistant housing. Approved for a Class 1, Division 1 hazardous environment.

    b. Capable of being submerged without damage.

c. Level measurement shall be automatically compensated over the working temperature range from 0 degrees F to 150 degrees F.

d. Ultrasonic beam: 8 degree angle or less.

e. Range: As specified on the drawings.

f. Cable: Integral cable length as required by the application.

3. Transmitter:

a. Microprocessor based, surface mount unit with LCD operator display, and keypad for user configuration. Nonvolatile memory.

b. Output: 4-20 mA, into a 500 ohm load, linear with range.

c. False echo suppression.

d. Power supply: 120 VAC single phase, 60 hz.

e. System "fail": SPDT contact to indicate unit failure including "loss of echo" alarm.

f. Relay outputs: Unit to provide a minimum of three relay outputs (SPDT) with adjustable setpoints and deadbands, available for pump control.

4. Manufacturer: Siemens/ Miltronics Hydro-Ranger and model XPS10F sensor, or equal.

B. Level switch - tilt float type:

1. Liquid level switches shall be the side mounted float actuated type. The float displaces a shuttle which magnetically actuates hermetically sealed SPDT switch within the unit. The unit shall be NPT threaded to suit field requirements. Switch enclosure shall be the appropriate NEMA 7 rating. Process wetted materials shall be 316 Stainless Steel.

2. Float switch shall be designed for level control in liquids such as raw sewage. Switch to be hermetically sealed, and magnetically actuated by a change in liquid level causing the float to tilt. Unit to narrow-angle type and meet the following requirements:

a. Sensor encapsulated in a chemical and corrosion resistant material such as polypropylene. Maximum diameter of 4 inches.

b. Sensor shall be approved for Class 1, Division 1 hazardous environment.

c. Switch contact: SPDT, suitable for low voltage intrinsically safe switching circuit application.

d. Cable: Integral sealed cabled. Length as required for the application.

e. Mounting: Cable suitable for tethering/clamping to a vertical rod in sump or wet well or as shown otherwise on the drawings.

3. Manufacturer: Warrick controls Series "M", Flygt Series ENM-10, or equal.

C. Pressure Transmitters (Not Used).

D. Totalizer LED: Totalizers (counters) shall be electronic LED type with 7 (minimum) non-resettable digits. Output shall be analog/HART signals.

E. Signal Isolator: Signal isolators shall have complete isolation of the input, output and power circuits. Signal input shall be 4-20 mA into 50 ohms maximum; signal output shall be 4-20 mA into 1000 ohms minimum. Power input shall be 120 VAC 60 Hz. Span and zero shall be adjustable; accuracy shall be ±1 percent of span. Units shall be surface or rack mounted.

F. Selector and Pushbutton Switches: See specification 16100 Basic Materials and Methods.

G. Indicating Lights: Indication lights shall be high-brightness LED, push-to-test type, and shall be NEMA heavy-duty, oil tight. Each light shall have a screwed-on glass prismatic lens approximately one-inch in diameter. Each light shall have a factory-engraved legend plate, as shown on the Drawings.

2.06 PROGRAMMABLE LOGIC CONTROLLER AND HUMAN MACHINE INTERFACE

A. Programmable Logic Controller Hardware.

1. Control system components shall be an established manufacturer's latest version as listed below. The PLC-01 shall have the following functions and features as minimum:

   a. Ethernet Communication Module capable of handling variety of standard communication PROTOCOLs.

   b. Shall be able to be programmed based on latest version of IEEE standards.

   c. Analog input modules.

   d. Analog output modules.

   e. Digital input modules.

   f. Digital output modules.

   g. Thermocouple input modules.

   h. RTD input modules.

   i. Redundant power supplies.

2. PLC hardware shall be Honeywell - ControlEdge, no equal.

   a. All PLCs and PLC-01 components must be of the same series and version. Third-party modules shall not be allowed.

   b. All PLC components, including power supplies, racks, CPUs, memory, I/O modules and cables shall be standardized across the system to minimize the spare parts inventory and maximize interchangeability, and to conform to the LAWINS DCS Standards.

   c. All I/O modules shall be installed with appropriate type and length of Remote Termination Cables (RTP) and associated RTP module for field wiring terminations.

   d. All CPUs shall have 16MBIts non-volatile memory for retention of key programming.

   e. Each PLC shall have the ability to provide 4GBits of Dynamic memory capacity (RAM) and 2GBits of Program memory capacity (Flash).

   f. Each PLC shall have the ability to operate in redundant or non-redundant modes and shall have the capability of a maximum of thirty-one (31) I/O bases and 372 Slots.

   g. Each PLC shall be provided with redundant power supplies and shall be sized as required for I/O and field requirements. Power supplies shall provide a minimum of 5VDC @ 3.0A and 24VDC @ .6A. Power supply shall be Honeywell 900P01-0101.

   h. Input power: 120VAC, 60Hz.

3. PLC I/O Modules:

   a. PLC I/O modules shall be Honeywell Universal Input/Output Module (900U01-0100), no equal.

   b. Interposing relays shall be provided for all relay outputs.

   c. I/O densities greater than sixteen (16) points per module shall not be allowed.

4. Honeywell DCS Connection Requirements:

   a. For hard wired Signals:

      (1) Type and number of signals.

      (2) Location for each signal (LCP#, Rack#, Slot#, Channel#).

5. For Soft Signals:

   a. Type and number of signals.

   b. IP address for each device (PLC, HMI, Multilin and similar devices and equipment) 3). Location for each signal (PLC#, and Register Address or Tag#).

   c. Length (Bit, Byte, Word, DWord).

   d. Interpretation (Signal Integer, Unsigned integer, BCD integer, Real/Decimal/Floating Point).

   e. Communication Protocol shall be Modbus TCP.

B. Human Machine Interface Hardware:

1. Where required, Panel mounted HMI shall be Honeywell MasterLogic Series, Model HC 900 family, no equal.

   a. The panel mounted HMIs shall have a keypad and touch-screen, including dedicated membrane keyboard to access up to 80 preformatted graphic displays.

   b. The display screen shall be a minimum of 10.4" LCD screen.

   c. All panel mounted HMI and HMI components, including screens and memory, shall be standardized across the system to minimize the spare parts inventory and maximize interchangeability.

   d. The HMI shall be capable of communicating with the PLC via an Ethernet TCP/IP connection.

   e. Input power: 120VAC, 60Hz via 24VDC Power Supply.

2. HMI PANEL with LCD display and touch screen shall be furnished to allow the Operator to monitor and make changes in set point registers of internal timers and counters in the PLC-01, start/stop pumps, change valve positions. Program logic or sequence changes shall not be made from this panel. Interconnecting cables between the HMI Panel and the PLC-01 shall be furnished. The HMI Panel shall provide the following functions and features:

   a. Conformal coating for protection from dampness, corrosion, and contamination.

   b. NEMA 4X enclosure, High Brightness HMI with Marine Certification.

   c. UL listing and labeling.

   d. 12-inch, color active matrix flat panel, backlighted display.

   e. Memory: 128 MB.

f. Operating System: Windows - latest version.

g. Input Voltage AC: 120 VAC, 60 Hz.

h. HMI's graphics screens shall be programmed as per ISA 101, per City standards, and per requirements specified in this section and shall provide the following:

(1) Overall Facility Layout screens for pumping.

(2) Operating/Monitoring/Troubleshooting screens.

(3) Log - in screen.

(4) Status screen (s).

(5) Function screens.

(6) Alarm logs.

(7) Event log.

(8) Maintenance screen.

(9) Communication screen.

(10) Trend screen.

(11) All screens shall have top three lines to display latest alarms, with date and time stamp, with navigational buttons for navigating between screens.

C. PLC and HMI Programming Development Software:

1. The PLC-01 programming software shall be Honeywell ControlEdge Builder - Latest Revision:

a. The PLC-01 programming software version for the PLCs shall be certified to run on the latest version of Microsoft Windows.

b. The PLC-01 programming software shall comply with the International IEC 61131-3 standard and support Ladder Diagram, Sequential Function Chart and Structured Text programming language formats.

2. The HMI programming software shall be Honeywell MasterLogic "Station Designer" for HC 900 family, or equal - Latest Revision:

a. The HMI programming software version shall be certified to run on the latest Microsoft Windows platform.

b. The HMI programming software shall be capable of directly accessing tag information in the PLC-01 by using the tag name, and not the memory address.

3. The City will provide to the PRIME CONTRACTOR two different types of PLC and HMI programming standards (Match Flow & Fill and Draw) during the design phase. The PRIME CONTRACTOR will use these programs as a standard and modify, if necessary, on a case-by case basis. The final PLC and HMI programs at each facility will need to be submitted and approved by the ENGINEER.

D. PLC Application Software Design Criteria:

1. PLC Program Design:

a. PRIME CONTRACTOR shall organize the PLC application software into:

(1) Sections:

(a) Contains all sequential control logic for a specific unit of operation.

(b) Each section consists of a general logic subsections and, followed by unit operation subsections.

(2) Subsections: Contains all sequential control logic for specific equipment such as a pump, valve, or loop.

b. Program Documentation:

(1) Note and describe start of a new program section.

(2) Annotate the PLC program.

(3) Briefly describe the control objectives.

(4) Identify subsections.

(5) Subsection documentation includes brief description of control objective followed by a description and tag of the equipment being controlled.

c. PRIME CONTRACTOR shall provide an, internal or external, organizational index for PLC application software that can be used to quickly search and locate a specific section, such as:

(1) Flow, pressure and other process variable monitoring.

(2) Control valve or VFD PID control.

(3) Unit pump control.

(4) Unit blower control.

(5) Alarms.

(6) Data communications.

(7) System time-synchronization.

(8) PLC program initialization.

d. The PLC program shall be able to initialize and bring a PLC unit from an inactive condition (e.g., power failure or hardware reset) to a state of operational readiness. Initialization shall include determination of system status prior to start-up of the operating system software and application software. Initialization shall also include the loading of all memory resident software, operator-entered setpoints, timers, counters, queues, and all dynamic database values. For example, existing operator-entered setpoints shall not require operator re-entry after a power failure or after the downloading of a new PLC program.

e. Control Narratives are provided in Attachment "A" of this Section. Software functionality testing during the PLC/ HMI Factory Test shall be based on the Control Narrative Descriptions.

E. HMI Application Software Design Requirements:

1. General:

a. PRIME CONTRACTOR shall develop and submit HMI application software in accordance with ASM guidelines and in strict accordance with these requirements.

b. The following items outline the key objectives in designing the HMI graphic displays:

(1) Easily navigated menus.

(2) Provide no more than three (3) mouse actions to navigate to any graphic display.

(3) Maintain consistency in graphic display and controls design.

(4) Maintain consistent and predictable window operations.

(5) Accurate representation of the facility and its operation.

(6) Represent control options in an easily understood fashion.

(7) Wherever possible, design overview displays similar to the physical layout of the facility. The perspective to the physical layout should be from the local main control room.

(8) Provide operator access to process and alarm setpoints, including the following:

(a) Process alarms (High-High, High, Low, and Low-Low).

(b) Control setpoints.

(c) Process timer setpoints.

(d) Sequence setpoints for volume, level, time, etc.

(e) Set or correct the time and date of the Real Time Clock for both the PLC and HMI. The time and date of both the PLC and HMI shall be synchronized to the DCS clock once per day.

(9) Provide an alarm/event screen with listing of current and historical alarms and events, e.g., operator login/commands/set-point entry, change in pump/blower/equipment status, including descriptions, times of occurrence, operator acknowledgement and return to normal status.

c. Configure the HMI to provide three levels of user access security.

(1) Visitor: View screens only.

(2) Operator: View screens, enter process setpoints, and select equipment configuration.

(3) Supervisor: All access provided to an Operator, but in addition ability to change alarm setpoints and PID controller parameters.

d. Provide pre-configured local trend displays of the following historical data with a choice of time ranges of at least 1hr, 4 hrs, 24 hrs and 7 days.

(1) Plant flow together with wet well level.

(2) Pump on/off together with pump discharge pressure and pump kW.

(3) Combined four pump on/off and discharge flow.

(4) Facility kW 15 minute average) and kW 1,000 gallons of discharge flow.

F. PLC/HMI I/O Database:

1. PRIME CONTRACTOR shall segment all I/O and cards to increase the reliability of all systems and limit any single I/O card failure causing an outage.

2. PRIME CONTRACTOR shall provide, coordinate, manage and document a PLC Database in accordance with LAWINS tag naming conventions. The Database shall have the following functions:

a. The database shall contain all the fields necessary to configure the various points including the following per point type:

(1) Discrete Point configuration: PRIME CONTRACTOR shall provide a PLC/HMI Discrete I/O database of all the analog and discrete points. The I/O list includes the following fields:

(a) Loop Number.

(b) Tag Number.

(c) Type.

(d) Point description.

(e) Alarm description 1.

(f) Alarm description 2.

(g) Closed Condition Input: Description of the state of the input parameter of device when the field or internal PLC contacts are in the CLOSED position.

(h) Open Condition Input: Description of the state of the input parameter of device when the field or internal PLC contacts are in the OPEN position.

(i) Closed Condition Output: Description of the state of the output signal in the CLOSED condition.

(j) Open Condition Output: Description of the state of the output signal in the OPEN condition.

(k) Alarm.

(l) PLC name and/or number.

(m) PLC network address.

(2) Analog Point Configuration: PRIME CONTRACTOR shall provide a PLC/HMI I/O database of all analog points that are communicated to and from the DCS and the HMI. The analog I/O database shall include, but is not limited to, the following fields:

(a) Loop Number.

(b) Attributes that further defines the function of the points as listed below: Note that the attributes will be used for sorting and development of the I/O driver configuration. Additional attributes shall be developed to meet the software needs:
- (i) Setpoint read.
- (ii) Setpoint write.
- (iii) Process variable.
- (iv) Flow totalizer read.
- (v) Equipment run time.

(c) Point description.

(d) Alarm description 1.

(e) Alarm description 2.

(f) Engineering units.

(g) Scale range.

(h) Alarm ranges:
- (i) High-High.
- (ii) High.
- (iii) Low.
- (iv) Low-Low.
- (v) Signal fail.

(vi) Rate of Change.
(vii) Other.

(i) PLC number.

(j) PLC I/O hardware addresses.

(k) PLC I/O memory addresses.

G. System Growth:

1. Prime Contractor shall provide twenty (20) percent spare IO channels per type installed on the PLC backplane. Spare capacity shall be based on current 'equipped' I/O counts.

H. Shop Drawings: The shop drawings shall include a full description of the PLC system, including documentation of operation theory, programming methods, i.e., ladder logic diagram (All contacts, coils, timers, latches, and each section of the ladder shall be clearly annotated and defined. The annotation of each of the input contacts representing a field device shall clearly define the status of the device.), data codes and security features, maintenance and trouble-shooting information. Schematics of all cards or units within the system along with point-to-point wiring diagrams shall be furnished after award of contract.

1. The documentation shall, also, provide a sequential flow chart of the logic implemented. The format of the flow chart and the annotation shall be proposed for acceptance by the ENGINEER before implementation.

2. Two sets of the program and documentation shall be forwarded for review and comments at least 30 days before factory test.

I. Test: All control panels and other control system equipment shall be factory tested to verify all functions and features of the equipment; both the manufacturer's published specifications and compliance with all requirements of these Contract Specifications. All electrical equipment containing solid-state logic systems shall be tested for a minimum of 100 hours at an ambient temperature of 120 degrees F prior to shipment from the factory. For testing, the equipment shall be interconnected with devices which will cause it to repeatedly perform all operations and experience all loads on the various components that will be seen in actual service. The ENGINEER may witness testing of the units. Solid-state logic systems shall be tested as complete assemblies. Testing of individual components or modules will not be acceptable. All testing shall be witnessed by the representative of the City Engineer. All costs for travel, lodging, transportation, meals, per-diem and other related expense shall be paid by the Contractor as part of the Contract Bid price. See General Requirements, Section 01453: Sampling, Testing and Fabrication Inspection.

J. Training: A manufacturer's representative shall supply 40 hours of on-site training if required, for CITY personnel. The training shall include, but not be restricted to, operation of programming unit, trouble shooting of system hardware, software, and program development.

K. Seven Day Acceptance Test: After startup has been completed, the System shall undergo a seven (7) day acceptance test. The System must run continuously for seven (7) consecutive days. During this period, all System functions shall be exercised, and any System interruption and accompanying component, subsystem, or program failure shall be logged for cause of failure, as well as time of occurrence and duration of each failure. A failure shall cause termination of the seven (7) day acceptance test. When the cause of a failure has been corrected, a new seven (7) day acceptance test shall be started. Skilled technicians shall respond to all trouble calls by the CITY.

1. The technician responding to a System malfunction, must prepare a report which includes details concerning the nature of the complaint or malfunction and the resulting repair action required and taken, plus time and date of occurrence and correction.

2. The System Malfunction Report form shall be submitted to the ENGINEER for review and approval before the time of re-start of testing. Failure to obtain ENGINEER approval for the Report form shall cause postponement of testing.

L. Operations and Maintenance Manuals: Furnish to the ENGINEER 10 complete sets of Operation and Maintenance manuals. The manuals shall include data sheets, catalog cuts, approved shop drawings, manufacturer's technical manuals, information drawings, etc., for the system, subsystems, and all components, and shall include names, addresses and telephone numbers of equipment suppliers, representatives, and repair facilities.

1. This shall include a complete description of the recommended operating procedures, maintenance procedures, and spare/replacement parts list for equipment items with catalog data, diagrams, and drawings or cuts describing the equipment.

2. Each set shall include full size assembly and wiring diagrams; drawings showing "as built" conditions shall be furnished to the CITY.

2.07 NETWORK DEVICES

A. Ethernet Network Switch - Unmanaged:

1. Compact, unmanaged Ethernet network switch, 16 port, DIN rail mounted. "Plug and Play". Designed for industrial environments.

2. Ports: 16 RJ45, 10/100Base TX, full/ half duplex.

3. Speed and flow control: Auto-negotiation, auto-sensing, store-and-forward.

4. Compliance: Full IEEE 802.3 and 1613.

5. Power Supply: 10 to 30 VDC.

6. Manufacturer: Red Lion N-Tron series, model 316TX or equal.

2.08 PROXIMITY SWITCHES

A. Proximity switches in unclassified areas:

1. Rectangular, plastic housed, NEMA 4X, magnetic sensing proximity switch with voltage free output contacts. Designed for non-contact detection of a ferrous metal or magnet target.

a. Output contacts: Dry, single pole, double throw (SPDT) rated for 2A at 24VDC, 5A at 120VAC, minimum.

b. Sensing distance, ferrous metals: 10mm minimum, unless otherwise noted.

c. Operating temperature, -40 degrees F to 150 degrees F minimum.

d. Power supply: none.

e. Manufacturer: Emerson/TopWorx Series 11, "GO" switch, or equal.

B. Proximity switches approved for use in classified areas - Intrinsically safe.

1. Rectangular, plastic housed inductive proximity switch FM approved for use in a hazardous Class 1, Div1 classified area when used with intrinsically safe barrier relay (switching amplifier).

    a. Output: 2 wire NAMUR interface, Output de-energized when target not detected.

    b. Sensing distance: 20 mm unless otherwise noted.

    c. Operating temperature: 0 degrees F to 150 degrees F minimum.

    d. Manufacturer: Pepperl + Fuchs VariKont series (NAMUR) NBN40-U1K-NO, with Pepperl+ Fuchs intrinsically safe relay (switch amplifier) Type KFA5-SR2- Ex2.W, or equal.

2.09 INTRINSICALLY SAFE BARRIER RELAYS FOR HAZARDOUS LOCATIONS

A. Barrier relay, FM approved for intrinsically safe applications. Transfers a digital signal from a hazardous area to a safe area.

1. Dual channel, DIN mount compact relay, with inputs capable of accepting field sensors with dry output contact or NAMUR interface.

2. Form C, changeover relay contact output for each channel, rated 4A at 120 VAC, and 2A at 24 VDC.

3. Barrier relay power supply: 115 VAC.

4. Operating temperature range 0 degrees F to 140 degrees F.

5. Indication: LED indication for relay output energized and power On.

6. Switch to reverse the Normal relay output state.

7. Line fault detection.

8. Manufacturer: Pepperl + Fuchs Type KFA5-SR2-Ex2.W or equal.

PART 3 - EXECUTION

3.01 INSTALLATION

A. The Instrumentation and Control System Subcontractor shall utilize personnel provided by its assigned organization to accomplish, or oversee the physical installation of all elements, instruments, accessories, or assemblies which it furnishes. The Instrumentation and Control System Subcontractor shall employ installers who are skilled and experienced in the installation and connection of all elements, instruments, accessories, and assemblies being furnished under this Contract.

B. In summary, it is the general intent of this Contract that all field cabling, i.e., wiring external to the Local Control panels, shall be furnished and installed under provisions of Division 16 Electrical. Computer and PCM equipment cables, data highway and grounding shall be furnished by the manufacturer and installed by the Instrumentation Subcontractor. Further, it is the general intent that all field wiring, i.e., 4-20 mA signal circuits, process equipment control wiring, signal wiring to field instruments, LCPs and PCM input and output wiring, be furnished and installed under Division 16 and be terminated and identified under provisions of Division 17 Instrumentation and Control.

C. The Instrumentation and Control System Subcontractor's attention is directed to the electrical and mechanical schematics and details of this project. Referral to these portions of the contract documents shall be required in order to understand the full intent and scope of work required.

3.02 CONTROL PANEL SIGNAL AND CONTROL CIRCUIT WIRING

A. Wiring Installation: All wires shall be run in plastic wireways except (1) field wiring, (2) wiring run between mating blocks in adjacent sections, (3) wiring run from components on a swing-out panel to components on a part of the fixed structure, and (4) wiring run to panel-mounted components. Wiring run from components on a swing-out panel to other components on a fixed panel shall be made up in tied bundles. These bundles shall be tied with nylon wire ties and shall be secured to panels at both sides of the "hinge loop" so that conductors are not strained at the terminals.

B. Wiring run to control devices on the front panels shall be tied together at short intervals with nylon wire ties and secured to the inside face of the panel using adhesive mounts.

C. Wiring to rear terminals on panel-mount instruments shall be run in plastic wireways secured to horizontal brackets run above or below the instruments in about the same plane as the rear of the instruments.

D. Conformance to the above wiring installation requirements shall be reflected by details shown on the shop drawings for the ENGINEER'S review and approval.

E. Wire Marking: Each signal, control, alarm, network cable, and indicating circuit conductor connected to a given electrical point shall be designated by a single unique number which shall be shown on all shop drawings. These numbers shall be marked on all conductors at every terminal using white numbered wire markers which shall be plastic-coated cloth, or permanently machine marked heat-shrink plastic and easily visible and readable.

3.03 INSTRUMENT CABLE TESTS

A. General: The following tests shall be performed on each instrumentation and control system cable which is installed under this Contract. All tests shall be end-to-end tests of installed cables with the ends supported in free air, not adjacent to any grounded object. Complete records of all tests shall be made and delivered to the ENGINEER for review and approval.

B. Continuity tests shall be performed by measuring wire/shield loop resistance of each signal cable as the wires, taken one at a time, are shorted to the channel shield. No loop resistance measurement shall vary by more than ±2 ohms from the calculated average loop resistance value.

C. Insulation resistance tests shall be performed by using a 1,000 volt Megger for insulations rated 600V or higher and 500 volts Megger for insulations rated 500V or lower. Megohmmeter shall be used to measure the insulation resistance between each conductor, between each conductor and the conductor shield, between individual conductor shields in a multi-channel cable, between each individual conductor shield and the overall cable shield in a multi conductor cable, between each conductor and ground, and between each shield and ground. Values of resistance less than 1 megohms will be unacceptable.

3.04 INSTALLATION, CALIBRATION, TESTING, PRECOMMISSIONING, START-UP

A. General: All systems specified in the applicable Sections of Division 17, shall be installed, connected/terminated, calibrated and tested, and in coordination with the ENGINEER, shall be

started to place the plant processes in operation. This shall include final calibration in concert with equipment specified elsewhere in these Contract Documents, including pumps, samplers, valves and chemical feeders. The installation personnel shall have a final reviewed copy of the shop drawings and data.

B. Installation and Connection: Install and connect all field-mounted components and assemblies under the criteria imposed in this Section under "Manufacturer's Representative Services." The installation personnel shall have a final reviewed copy of the shop drawings and data.

1. All instruments and connecting lines shall have allowance made for movement of equipment caused by seismic loading, vibration, or expansion or contraction caused by temperature changes. This shall be demonstrated to the ENGINEER during witnessing of field installation work prior to startup.

2. All accessory items required for installation and proper operation of the equipment shall be provided. Such items may include instrument valves, seal pots pigtails.

3. Lines or connections open to atmosphere shall be protected against ingress of foreign matter. Unprotected openings shall have a goose neck, or equivalent, attached to protect against falling particles. Bird screen and insect screens shall be installed.

4. Comply with installation detail in the specifications for mounting of the instrument.

5. Verify that all Differential Pressure elements have three valve 316 SS manifolds.

6. All flexible cables and capillary tubing shall be installed in flexible conduits. The lengths shall be enough to withdraw the element for periodic maintenance.

7. All power and signal wires shall be terminated with spade type lugs.

8. All connectors shall be, as a minimum, watertight.

9. All wires shall be mounted clearly with identification tags at both ends that is of a permanent and reusable nature.

10. All wire and cable shall be connected from terminal to terminal without splices unless specifically approved by the ENGINEER and arranged in a neat manner and securely supported in cable groups. All wiring shall be protected from sharp edges and corners.

11. Verify that all mounting stand and bracket materials and workmanship comply with requirements set forth in the specifications and drawings.

12. Provide a technical field representative to instruct the installation personnel on any and all installation requirements; thereafter, the technical field representative shall be readily available by telephone to answer questions and supply clarification when needed by the installation personnel.

13. Finally, after all installation and connection work has been completed, the technical field representative shall check for correctness, verifying polarity of electric power and signal connections, making sure all liquid or pneumatic process connections are free of leaks, and all other similar details. The technical field representative shall certify in writing that for each loop or system checked out, all discrepancies have been corrected by the installation personnel.

14. Bear all costs and provide all personnel, equipment, and materials necessary to implement all activities specified herein.

C. Process Connections: Process Connections and root valves shall be located so that they are accessible. Root valves stem and handle shall be installed clear of mainline insulation.

1. Consistent with measuring needs, process connections shall be located to have minimum movement. Therefore, they shall be as close to the system anchor points as possible.

2. For instruments mounted on a local board, the process connection shall be located as close as practical to the board.

3. Process connections in pipelines shall be oriented to avoid gas pockets in the sensing lines for liquid and vapor, and to avoid liquid pockets in the sensing lines for gas.

D. Valves: Root valves shall conform in design to the main-line class. If a globe-pattern root valve is used for pressure ranges of 0-15 psig, or differential pressure ranges of 0-100 inches H_2O, or vacuum service, its stem shall be installed horizontally. All other globe-pattern root valves shall have the stem vertical. All valves shall be full port ball where available.

1. Relief valves shall be installed without isolation valves.

2. To allow isolation of instruments, each instrument, EXCEPT FOR RELIEF VALVES, shall have a shutoff valve that is close to the instrument and is readily accessible. Where the root valve serves this purpose, instrument valves are not required.

3. If the root valve for a test point is not accessible, pipe or tubing shall be added and an instrument valve installed at convenient location.

E. Instruments: Locate locally mounted instruments near the most convenient point of use consistent with good measuring practice and accessibility. Sensing lines shall be as short as practical.

1. When consistent with good measuring practice, local boards or racks may be used to mount instruments that are grouped together because of common locations or related function.

2. Instruments and local boards shall not block walkways. For use, calibration, and repair, they shall be accessible without requiring instrument disassembly or the removal of piping, grating, or other structure.

3. Instruments shall be 4' - 6" above the floor unless shown otherwise on the drawings. Exceptions may be made for seismic supports, for instruments accessibility, or for other factors, but must be approved by the ENGINEER prior to the work being done. Sufficient lighting shall be provided for night-time use.

4. Instruments shall be protected against shock and vibration. Because of vibration, electro-pneumatic signal converters, in particular, shall not be mounted on control valves.

5. High temperature, high humidity and other ambient factors must be considered when locating instruments that require access for service.

6. Fluid-filled sensing systems, or "capillary tubes", are sealed to the instrument by the instrument manufacturer and are not repairable in the field. Such systems shall not be opened or cut during or after installation and shall be routed and protected as required to guard against damage. Avoid sharp bends in capillary tubing (i.e. bend radius shall not be less than 10 times the diameter of the capillary tubing). Excess lengths of capillary tubing shall be neatly coiled in a protected area or enclosure, e.g., coiled inside a protective shipping cap for 12-inch pipe.

7. Manufacturer's installation requirements, including those relating to unsupported span and minimum bend-radius of capillary tubing, must be submitted for review and approval by the ENGINEER.

8. All instruments shall have nameplates and tag numbers engraved on tags made of 316 stainless steel and attached with 316 stainless steel wire.

F. Fittings: Fittings shall not be used between the process connection and the root valve nor for pipe on the process side of condensate or seal pots, except that displacement and float-type level instruments are normally installed using pipe fittings.

1. So far as practical, bends rather than fittings shall be used to change the direction of a run of tubing or pipe. The minimum bending radius for cold-bending of tubing shall be three times the outside diameter of tubing and is covered by ANSI B31.1.

2. The ferrule of a flareless tube fitting shall be harder than the tube on which it is used.

3. Lubricant and sealant compounds shall be used as required by the city and equipment suppliers.

4. Where a detail specifies a size and type of fitting, a combination of fittings of other sizes but of the same or equivalent type giving the same or better overall effect may be substituted for convenience or if the desired part is not available. Flareless or threaded connections may not be used where weld connections are required. Where a 1/2" socket-weld fitting is required, a pipe 1/2" tube socket-weld fitting plus a 1/2" x 3/8" tube socket-weld fitting may be substituted. A flareless-end valve may be substituted for a threaded valve with flareless connectors, or vice versa. A weld fitting may replace a threaded or flareless fitting unless maintenance access will require the ability to make and break the connection. Each substitution shall require written approval of the ENGINEER.

5. Welding shall conform to project requirements.

G. Calibration: Analog instrumentation and control system equipment shall be calibrated and tested after installation to verify that control system requirements are satisfied.

1. The Instrumentation and Control System Subcontractor shall provide all necessary labor, tools, and equipment to calibrate and test each instrument in accordance with the manufacturer's specifications and instructions.

2. Each instrument shall be calibrated at a minimum of three points using test equipment to simulate inputs and read outputs. A fewer number of calibration steps may be used for selected instruments if prior written approval has been obtained from the ENGINEER.

3. All test equipment and instruments used to simulate inputs and read outputs shall be suitable for the purpose intended and shall have a current calibration record certified to an accuracy greater than that required for the instrument under test. Such test equipment shall have accuracy traceable to the National Bureau of Standards as applicable. All analog instruments shall be calibrated and tested in place without removal.

4. A report shall be delivered to the ENGINEER for each instrument, certifying that the instrument has been calibrated, in the presence of the ENGINEER or the ENGINEER's designated representative and meets contract and system requirements. The report shall include but not be limited to pertinent manufacturers name plate data, units span setting, any error in percent at each test point, switch and alarm set points, valve stroking and controller balancing information, etc.

H. Analog/Digital Loop Tests: The Instrumentation and Control System Subcontractor shall provide all necessary labor, tools, and equipment to field test, inspect and adjust each instrument installed under this contract to its specified performance requirement in accordance with manufacturer's specifications and instructions. Any instrument furnished by the Instrumentation and Control System Subcontractor which fails to meet any Contract requirement, or any published manufacturer performance specification for functional and operational parameters, shall be repaired or replaced, by Instrumentation and Control System Subcontractor at no cost to the CITY. The Instrumentation and Control System Subcontractor shall bear all costs and provide

all personnel, equipment and materials necessary to implement all installation tests and inspection activities specified herein.

1. At least 15 days before the anticipated initiation of installation testing, the Instrumentation and Control System Subcontractor shall submit to the ENGINEER a detailed description, in duplicate, of the installation tests to be conducted to demonstrate the correct installation of the instrumentation and control system and the anticipated dates the testing will occur.

2. Elements such as controllers, electronic function modules, shall be tested and exercised by the Instrumentation and Control System Subcontractor to demonstrate correct operation, first individually and then collectively as functional analog networks. Each hardwired analog control network shall be tested to verify proper performance within specified accuracy tolerances. Specified accuracy tolerances for each analog network shall be defined as the root-mean-square (RMS) summation of individual component accuracy requirements. Individual component accuracy requirements shall be as specified by contract requirements or by published manufacturer accuracy specifications, whenever contract accuracy requirements are not specified.

3. Each analog network shall be tested by applying simulated analog/digital and/or discrete inputs to the first element(s) of an analog/digital network (i.e., applying simulated analog and/or discrete signals to element(s) of the network; e.g., controllers, alarms, indicators, valve operators, etc.). For networks which incorporate analog elements, simulated sensor inputs corresponding to 10 percent, 50 percent, and 90 percent of span shall be applied, and the resulting element outputs read to verify compliance to calculated root-mean-square- summation accuracy tolerance requirements. Continuously variable analog inputs shall be applied to verify the proper operation and setting off discrete devices (i.e., alarms, etc.). Provisional settings shall be made on controllers, alarms, etc., during analog loop tests. All analog loop test data shall be recorded on test forms, which include calculated root-mean-square-summation system accuracy tolerance requirements for each output.

4. Air systems shall be tested for leaks in compliance with ISA RP7.1. When installation tests have been successfully completed for all individual instruments and all separate analog control networks, a certified copy of all test forms signed by the ENGINEER or the ENGINEER's representative as a witness, with test data entered, shall be furnished to the CITY together with an unequivocal statement that all instrumentation has been successfully calibrated, inspected, and tested.

5. Digital loops shall be tested for loop integrity and on/off function.

I. System Pre-commissioning: System pre-commissioning shall comply with the requirements specified herein. Pre-commissioning shall commence after acceptance of all wire, calibrating and loop tests, and all inspections have demonstrated that the instrumentation and control system complies with all contract requirements. Pre-commissioning shall demonstrate proper operation of all systems under this Contract with process equipment operating over full operating ranges under actual operating conditions.

1. All pre-commissioning and test activities shall follow detailed test procedures, check lists, etc., previously developed by the Instrumentation and Control System Subcontractor and reviewed and accepted by the ENGINEER. All test data shall be acquired using equipment as specified and recorded on test forms, previously reviewed by the ENGINEER, which include calculated tolerance limits for each step. Completion of all system pre-commissioning and test activities shall be documented by a certified report, including all test forms with test data entered, delivered to the ENGINEER with a clear and unequivocal statement that all system pre-commissioning and test requirements have been satisfied.

2. The proper operation of all final control elements, control panels and instrumentation furnished under this Contract shall be verified by tests conducted in accordance with the requirements specified herein. Where feasible, system pre-commissioning activities shall include the use of water to establish service conditions that simulate, to the greatest extent possible, normal final control element operating conditions in terms of applied process loads, operating ranges and environmental conditions. Final control elements, control panels, and ancillary equipment shall be tested under start-up and steady-state operating conditions to verify that proper and stable control is achieved using motor control center and local field mounted control circuits. All hardwired and software control circuit interlocks and alarms shall be operational. The control of final control elements and ancillary equipment shall be tested using both manual and automatic (where provided) control circuits. The stable steady-state operation of final control elements running under the control of field mounted automatic analog controllers or software based controllers shall be assured by adjusting the controllers, as required, to eliminate oscillatory final control element operation. The transient stability of final control elements operating under the control of field mounted, and software based automatic analog controllers shall be verified by applying control signal disturbances, monitoring the amplitude and decay rate of control parameter oscillations (if any) and making necessary controller adjustments, as required, to eliminate excessive oscillatory amplitudes and decay rates.

3. All electronic control stations incorporating proportional, integral and/or differential control circuits shall be optimally tuned, experimentally, by applying control signal disturbances and adjusting the gain, reset and/or rate setting(s) as required to achieve a proper response. Measured final control element variable position/speed setpoint settings shall be compared to measured final control element position/speed values at 10 percent, 25 percent, 50 percent, 75 percent, 90 percent and 100 percent of span and the results checked against specified accuracy tolerances. Specified accuracy tolerances are defined as the root-mean-square-summation of individual component accuracy requirements. Individual component accuracy requirements shall be as specified in the Contract or as specified by published manufacturer accuracy specifications whenever Contract accuracy requirements are not specified.

4. The Instrumentation and Control System Subcontractor shall submit an instrumentation and control system Pre-commissioning Completion Report, which shall state that all Contract requirements have been met and shall include a listing of all instrumentation and control system maintenance/repair activities conducted during the pre-commissioning testing. Prior to the seven day operational test, acceptance of the instrumentation and control system pre-commissioning testing must be provided in writing by the engineer before the seven day operational testing may begin. Final acceptance of the control system shall be upon contract completion as stated in the GENERAL CONDITIONS, Section 01770: Project Closeout.

J. 30-Day Operational Testing: The Instrumentation and Control System Subcontractor shall provide start-up support to include the Instrumentation and Control System Subcontractor's personnel, electrical personnel, and any instrument manufacturers' representatives as required during the testing period to produce a fully operational system. This support shall be provided at no additional cost to the CITY.

K. Record Drawings: Keep current an approved set of complete loop and schematic diagrams which shall include all field and panel wiring, piping/tubing runs, routing, mounting details, point-to-point diagrams with cable, wire, tube and termination numbers. These drawings shall include all instruments and instrument elements for the complete instrument loop as furnished under Divisions 13, 15, 16 and 17 of this Contract. Drawings shall be a record of work as actually

constructed and shall be prepared and submitted as specified in the GENERAL REQUIREMENTS.

3.05 CONTROL NARRATIVES -- SEE ATTACHMENT "A"

A. Prime Contractor shall use the Control Narratives included in Attachment A to prepare loop descriptions to be used to program the PLC.

3.06 CALIBRATION FORMS

A. General: Prime Contractor shall prepare and submit proposed calibration forms for instruments to be furnished and tested for this project. Forms shall be submitted in advance of calibration and testing activities.

END OF SECTION

ATTACHMENTS TO SECTION 17400

Attachments to Technical Specifications Section 17400 consists of documents, as follows:

ATTACHMENT NUMBER	TITLE OF ATTACHMENT	NUMBER OF PAGES IN THIS ATTACHMENT
17400-A	Control Narratives and Sample Loop Description	9

PROCESS CONTROL DESCRIPTION
MACARTHUR LAKE STORMWATER CAPTURE PROJECT

ATTACHMENT 17400-A

SECTION 1 - GENERAL

The Project will install various new stormwater infrastructure improvements around MacArthur Lake Park, upgrade the surrounding neighborhood west of the park to improve stormwater management, and provide other park enhancements. Key project components to be controlled include:

- Stormwater Pump Station 1: Diversion of stormwater for treatment and pumping to either the lake, or to the storm drain. This system will include 2 x 60 HP pumps (3,000 gpm each) with VFDs, and one dry weather flow pump at 11 HP, constant speed (600 gpm). Two levels of treatment will be provided: a pretreatment unit or approved equal, followed by a secondary treatment units or approved equal. A motorized slide gate is present at the diversion structure so diversions can be disabled for maintenance.
- Lake Water Pump Station 2: Replace the existing 20 HP constant-speed vertical turbine pump currently used for lake water recirculation and treatment. Remove the existing treatment system that consists of sand filter and a UV treatment system. Install a new 5 HP constant-speed vertical turbine pump to provide recirculation of lake water to the cascading water feature, which flows back into the lake. The cascading water feature pump has been selected based on a target pumping rate of 350 gpm.
- In total, the new systems include 1 motorized slide gate in the diversion structure 1, 4 motorized valves, 3 flow meters, 1 ultra-sonic level device in the new pump station wet well, and 1 ultra-sonic level device in the existing Pump House wet well for lake level.
- There is an existing automated lake fill system with a control panel located in the pump house that supplements lake water losses due to evaporation with potable water. This automated lake filling system will be disabled during the wet season from November 1 to April 30, and activated during the period from May 1 to October 31. During the dry season starting May 1, the lake fill system will activate if the lake level falls to 256.6 feet (6 inches below 257.1 full setpoint) and will fill to 256.93 ft (to allow space for dry weather flows).

SECTION 2 – DRAWING REFERENCES

Drawing No.	Process and Instrumentation Drawing Description
IG001	INSTRUMENTATION SYMBOLS AND ABBREVIATIONS
IG002	INSTRUMENTATION SYMBOLS
IP101	OVERALL FLOW SCHEMATIC
IP102	INSTRUMENTATION PLAN I
IP103	INSTRUMENTATION PLAN II
IP104	INSTRUMENTATION PLAN III
IP105	INSTRUMENTATION PLAN IV
IP106	PLCS INPUT OUTPUT LIST

SECTION 3 - SYSTEM DESCRIPTION

Control strategy (refer to sheet IP101):

1. Stormwater Treatment Loop Scenario 1 – Dry Weather Flow (Urban Runoff)
    a. The dry weather flow scenario will be the default condition of the system and will likely be used for +/- 330-350 days out of the year (whenever storm mode is not in use). Dry weather flow diversion and pumping shall be controlled at the PLC or HMI. Flow diversion

will be continuously enabled, although a motorized slide gate is present at the diversion structure in case flow diversions need to be stopped. The existing lake fill system will be disabled as described above to allow lowering of the lake level and filling with diverted/treated water. The existing lake fill system will be enabled again when flow diversion and pumping is disabled, or if the diversion and pumping system is not functioning and in alarm condition.

b. Lower lake level up to 2 inches (adjustable) to 256.93 ft from the maximum lake level of 257.1 feet above mean sea level (ft msl) . This equates to approximately 1.33 AF available storage in the lake. The drained lake water will be conveyed to the existing 48-inch sanitary sewer and ultimately reach the Hyperion Water Reclamation Plant for further treatment and recycling. MOV-010 releases water from the existing lake low drain to the lake drain vault, and MOV-303 releases water from the lake drain vault to the 48-inch sanitary sewer.

c. Once the lake level reaches its preset minimum level (256.93 ft), the valve that allows drainage to the sewer (MOV-303) will be closed.

d. Dry weather flows will be diverted by gravity from the new Diversion Structure constructed on the existing 45-inch storm drainpipe to the new Pump Station No.1. The dry weather flow pump is a constant speed pump that will deliver 600 gpm to the lake via Pretreatment Unit and Secondary Treatment Units. MOV-220 needs to be open for water to flow to the lake, and flow will be monitored by FE-505.

e. If the lake level reaches its maximum level of 257.1 ft msl, the lake level will again be lowered by opening MOV-010 and MOV-303 to release lake water to the sewer and create storage space for treated urban runoff. MOV-330 must be closed when lake water is drained to the sewer.

f. Timing for lowering the lake level and pumping will be refined during commissioning in order to maximize water quality benefits. Ideally, pumping will be continuous, and cycles for lowering the lake will not normally need to disable pumping, and can instead overlap pumping for Scenario 1.

g. The existing lake potable water filling control panel needs to be disabled during stormwater diversion and pumping. This can be done by lowering the lake level that triggers potable water filling to a lake level below the operating range for which dry weather and stormwater flow will be directed to fill the lake. Alternatively, a hard-wired lock-out of the potable water filling system will be provided.

h. If the PS No.1 pump fails, an alarm will be sent to Venice PS via SCADA. No stormwater will be treated or routed to the lake.

i. If pump outage is for an extended period and the lake level drops to its minimum level, the lake potable fill valve must be opened. Manual override command will be provided for the potable water filling system.

j. If a rain event occurs during the dry weather flow scenario and the lake water reaches its maximum elevation of 257.1 ft msl, then MOV-220 will be closed and treated stormwater flow will be diverted back to the existing 54-inch storm drain on South Grand View Street.

k. If flow cannot be diverted to the 54-inch storm drain, then the existing lake overflow drainpipe will convey the flow to the existing 30-inch storm drain that connects to the 54-inch storm drainpipe. This emergency operation requires that valve MOV-330 must remain open when MOV-303 is closed.

2. Stormwater Treatment Loop Scenario 2 – Wet Weather Flows (Stormwater Capture)

a. If a rain event is in the 10-day forecast, LASAN operations will put the facility into Stormwater Capture Mode, the lake will be lowered by up to 8 inches from its normal level to the minimum lake level (256.433 ft) by opening MOV-010, and the lake water will be conveyed to the existing 48-inch sanitary sewer by opening MOV-303. This allows approximately 5 AF of storage to be available for treated stormwater. Once lake level reaches the preset minimum, MOV-303 will be closed.

b. Lead/lag pumping will be enabled on reaching the low lake level setpoint. One of the new 60 HP VFD driven pumps will send treated stormwater to the lake to raise the lake level. Pumps will be operated based on level to maintain a set level in the wet well by varying motor speed and number of pumps in operation. The maximum flow capacity of each 60 HP pump is 3,000 gpm.

c. If the rain event is greater than 3,000 gpm, then the second 60 HP pump will turn on. Both pumps will operate up to a maximum combined flowrate of 6,000 gpm.

d. When the water level in the lake reaches the maximum level of 257.1 ft msl, MOV-220 will close, and the treated stormwater will be reverse direction in the 24" pipe and be diverted to the existing 54-inch storm drainpipe.

e. Once the lake level reaches its maximum level of 257 ft msl, the lake level can again be lowered by opening MOV-010 to release lake water to the storm drain (via MOV-330) and create storage space for treated urban runoff and stormwater. In order to reduce peak sewer flows during storms, releasing lake water to the sewer (via MOV-303) will not be allowed within 48 hours of a storm.

f. In the event where all 3 pumps in PS No.1 fail, no stormwater will be treated or routed to the lake.

g. LASAN will have the option of diverting lake water to flow through the overflow drainpipe by gravity to the existing 30-inch storm drainpipe via opening MOV-330,and closing MOV-303.

h. One of the two valves (MOV-303 or MOV-330) must be open to drain water from the Lake, and both valves should not be open at the same time.

3. Lake Water Recirculation Loop

a. The lake water Pump Station No. 2 (P-104) will have the capability to operate year-around on a 365/24 basis, and will be provided with a time clock to allow scheduled nighttime off time if desired by the City. Generally the water feature pump will be on-line unless unforeseen circumstances or scheduled maintenance needs to occur for the pump station, and/or the water feature.

b. The lake water Pump Station No. 2 (P-104) can be turned off during maintenance activities. The water feature flow-through planters will stop flowing and water levels will remain constant at each corresponding weir level.

Stormwater vaults and pump vaults will be classified per NEC – Class 1, Div 2.

Stormwater Pump Station 1 Data	
Type	Stormwater Diversion Pump Station
Number of Pumps	Two 60 HP pumps with VFDs for wet weather – one operating and one standby One 11 HP pump for dry weather flow
Pump Station Capacity	3,000 gpm for 60 HP pump 600 gpm for 11 HP pump
Pump Controls	2 x 60 HP pumps with VFDs

Lake Water Pump Station 2 Data	
Type	Lake Recirculation Pump Station
Number of Pumps	One 5 HP pump
Pump Station Capacity	350 gpm
Pump Controls	Constant speed

Both pump stations will be powered from the existing electrical service: 1,200A, 3-Phase, 480 V electric power service, supplied by Los Angeles Department of Water and Power (LADWP).

The pump stations will be linked by cellular communication to Venice Pump Station for SCADA controls, monitoring and alarms.

SECTION 4 - MODES OF OPERATION

Control of process equipment may be performed from one (1) or more of the following locations:

A. In the field (FIELD Control), such as a switch located on or next to the device.

B. From Local Control Panels and/or Motor Control Centers (LOCAL Control).

C. From the PLC HMI.

SECTION 5 – PROCESS CONTROL DESCRIPTIONS

Index of Loop Descriptions

Loop Description Number	Description
5.1	Stormwater Diversion and Pumping
5.2	Pump Protection and Condition Monitoring
5.3	Variable Frequency Drives (VFDs)
5.4	Pump Station Discharge Flow Monitoring
5.5	Motorized Diversion Valves
5.6	Energy Monitoring
5.7	PLC Health

5.1 Stormwater Diversion and Pumping

A. Diversion to Stormwater Pump Station 1

1. Flow from the existing 54-inch storm drain will enter into the diversion structure, pass through a manhole with a motorized slide gate valve SLG-01, through Pretreatment Unit, and into Pump Station 1 wet well. The default position of SLG-01 will be open, and the gate can be remotely operated via SCADA or manually closed for maintenance purposes.

B. Lake Recirculation Lake Water Pump Station 2

1. This pump will be on a timer and programmed to run per RAP scheduling. The pump will either run continuously, or programmed to shut down at night if desired by RAP.

C. Pump Station 1 General Requirements

1. Two 60 HP pumps are controlled by VFDs, and can be operated in either PLC/Auto mode, PLC/Manual mode, or Local/Manual mode (from the VFD).

2. Each pump can be placed into PLC-MANUAL Mode at the HMI by selecting MANUAL at the VFD-Auto-Manual station. In this mode the pumps can be individually started and stopped, and speed controlled.

3. Each Pump can be placed into PLC-AUTO Mode at the HMI by selecting AUTO at the VFD-Auto-Manual station. In this mode the PLC will control starting and stopping of pumps, and speed control.

4. Each Pump can be placed into LOCAL-MANUAL Mode at the VFD by selecting MANUAL at the Auto-Manual selection. In this mode the pumps can be individually started and stopped,

and speed controlled from the VFD. A signal will be sent to the PLC that the VFD is in LOCAL.

D. Stormwater Pump Station 1 Control Overview: 3 total pumps - two duty pumps (lead, lag, and one standby larger diversion pump).

1. In PLC/Auto Level Control Mode, the smaller 11 HP pump is Lead and one of the larger 60 HP pumps is designated as Lag duty pump. Pumps are sequenced On and OFF automatically based on wet well level. During dry weather, as the wet well level rises and falls to pump start and pump stop setpoints, the smaller in-service pump starts and stops. As wet well level rises further to the larger duty pump setpoint (during wet weather), the lead duty pump starts at preset 100% speed (adjustable). Larger duty pump VFD speed will be adjusted to maintain a desired wet well level setpoint (adjustable) as measured by LIT-101. Similarly, when the wet well level drops, low level initiates the stopping of both duty pumps. The following initial/adjustable settings apply, in order from lower to higher levels:

    - 238.50 – Small Pump Off
    - 239.50 – Small Pump On
    - 240.50 – Both Large Pumps Off
    - 242.00 – Lead Large Pump On
    - 243.50 – Lag Large Pump On
    - 248.00 LSHH – Hi-Hi Level Alarm

2. An EMERGENCY MODE is initiated to start lag pump if duty pump fails to start when called.

3. The duty pumps deliver flow at a rate of 3,000 gallons per minute (maximum) to the lake, or to the storm drain. Flow is measured with a magnetic flow meter installed in-line with the duty pump force main (FE-101). Delivery of flow will be varied.

    - To deliver treated stormwater water to the lake, the MOV-220 must be open.
    - If the lake level is at the maximum water level setpoint 257.1 ft, MOV-220 will close, and flow will reverse in the 24-inch pipeline and flow to the 54-inch storm drain line on Grandview.
    - If the lake level is lowered by at least 2 inches (to 256.93 ft), MOV-220 will open again to continue to deliver treated stormwater to lake.

4. Duty pump starts in PLC/AUTO and PLC/MANUAL modes will be subject to permissives:

    - Pump discharge valve to the lake (MOV-220) must be open for intended lake discharge.
    - Water level in Pump Station 1 wet well must be above the duty pump stop elevation PLC/Manual mode.

E. Lake Water Pump Station 2 Control Overview: The pump station operation will be either on a timer, or continuous 365 days per year and 24 hours per day, unless interruptions are required for maintenance.

1. The lake water recirculation pump is sequenced On and OFF automatically based on a timeclock set to turn on at 5 a.m. till 9p.m. the timer can be adjusted and modified.

F. Process Equipment

Equipment ID	Description	Sensor/Switch Activation Level (feet)
LE-101	Pump Station 1 Ultrasonic	Refer to 5.1(D)(1)
LIT-101	Pump Station 1 Ultrasonic	
LE-102	Lake Level Ultrasonic	Loop #1 - Dry Weather OPEN- MOV-10 - 257.1 OPEN- MOV-303 - 257.1 CLOSE- MOV-330 - 257.1 OPEN- MOV-10 – 256.93 OPEN- MOV-303 – 256.93 CLOSE- MOV-330 – 256.93 Loop #2 - Wet Weather CLOSE-MOV-220 – 257.1
LIT-102	Lake Level Ultrasonic	

Notes:

1. These levels are adjustable based on operations staff input.

G. Alarms and Monitoring

1. PLC/ HMI

   a. Generate an alarm if a level transmitter “Fail” signal is received from either of the wet well level transmitters, or the analog level value is outside the acceptable 4-20 mA limits.

   b. Generate Hi-Hi Level alarm for initiation of Pump Station 1 Emergency Mode (initiated at elevation 248 ft msl (adjustable) based on either the ultrasonic level device or the backup float switch.

5.2 Pump Protection and Condition Monitoring

A. Process Equipment

Equipment ID	Description
P-101	Diversion Pump 1 at PS-1
P-102	Diversion Pump 2 at PS-1
P-103	Diversion Pump 3 at PS-1
P-104	Recirculation Pump

B. Control Overview

1. Pumps 102 and 103 have winding temperature and moisture leakage monitoring, wired to a monitoring relay in the associated VFD. The pump is shut down if any of the alarms is

detected. Monitoring relays must match the pump and be provided by pump manufacturer to electrical contractor for installation at VFD cabinets.

C. Hardwired Interlocks
   1. The motor winding has thermal switches to detect an over-temperature condition. The pump has a moisture leakage probe wired back to a controller in the VFD. The VFD incorporates a thermal motor overload protection relay. Any alarm condition causes the pump/ VFD to shut down to prevent damage to the motor.

D. Alarms and Monitoring
   1. PLC/ HMI
      a. Generate an HMI alarm and indicate status on the process graphic for each of the pump protection alarms.

5.3 Variable Frequency Drives (VFDs) Monitoring

A. Process Equipment

Equipment ID	Description
VFD-102	60 HP, 18 pulse with Modbus TCP communications
VFD-103	60 HP, 18 pulse with Modbus TCP communications

B. Control Overview
   1. Each VFD has a Local Hand-Off-Auto switch and Start/ Stop pushbuttons that are enabled in the HAND mode. In VFD HAND mode the pump speed can be set on the VFD front panel. In AUTO mode, the PLC starts and stops the pump, and sets the pump speed.

C. Hardwired interlocks
   1. The motor winding over-temperature, moisture leakage alarm, and motor overload are included in the VFD drive. Detection of any of the alarms will initiate a drive shut-down.

D. Alarms and Monitoring
   1. PLC/ HMI - An alarm is generated and indicate on the HMI process graphic for the following VFD signals:
      a. VFD failure
      b. VFD High temperature
      c. Pump motor overload
   2. Monitor and display the following VFD signals
      a. Pump speed
      b. Pump amps (network)
      c. Pump kW (network)
      d. Pump in HAND mode
      e. Pump in VFD mode
      f. Pump running

E. Control Modes
   1. The pumps can be controlled in the following Modes:
      a. LOCAL- MANUAL, VFD and EMERGENCY MODE
      b. Placing the VFD- Manual switch on the VFD in MANUAL allows the pump to be started and stopped from push buttons on the VFD. The speed can be manually set at the VFD.

c. Pumps will be forced to EMERGENCY MODE by float switches above the normal wet well levels. Pumps will be stopped by float switches, and can also be stopped from pushbuttons on the VFD.

2. LOCAL- AUTO
   a. None
3. PLC - MANUAL
   a. See paragraph 5.4 for PLC Manual and Auto modes.
4. PLC - AUTO
   a. See paragraph 5.4 for PLC Manual and Auto modes.

5.4 Pump Station 1 Discharge Flow Monitoring

A. Process Equipment

Equipment ID	Description
FE	Pump Station 1 Flow

B. Control Overview
- VFD speed will be adjusted to control wet well level, and to limit total pump station flow to 3,000 gpm.

C. Hardwired interlocks
- None

D. Alarms and Monitoring
1. Monitor flow value and display on HMI
2. A “Flow Error” alarm is generated if no pumps are running and flow is above 100 gpm (adjustable) for three minutes.
3. A "Low Flow" alarm is generated if smaller pump is running and flow is below 100 gpm (adjustable) for three minutes.
4. A "Low Flow" alarm is generated if larger diversion pump is running and diversion flow is below 1,000 gpm (adjustable) for three minutes.

E. Control Modes
- None

5.5 Motorized Diversion Valves

A. Process Equipment

Equipment ID	Description
MOV-220	Diversion Valve to Lake 24-inch Actuated Gate Valve Fail-Closed (FC)
MOV-303	Lake Drain Valve to Sewer 12-inch Actuated Plug Valve
MOV-010	Lake Drain Valve to Sewer and SD 16-inch Actuated Plug Valve Fail-Closed (FC)
MOV-330	Lake Drain Valve to Storm Drain 24-inch Actuated Plug Gate Valve

B. Control Overview

- Diversion valves will be opened and closed based on water levels in diversion structure wet well and MacArthur Lake. Refer to Section 3 for opening and closing valves.

C. Hardwired interlocks

- None

D. Alarms and Monitoring

1. Monitor valve status (open and closed) and display on HMI.
2. A "common trouble" alarm is generated for high torque, or motor over-temperature.
3. An “In Remote” signal is sent to PLC to indicate valve is available for PLC control.

E. Control Modes

- In REMOTE, valves will be controlled by PLC, either automatically or manually. In LOCAL valves will be controlled by the local valve operator control stations.

5.6 Motorized Slide Gate

A. Process Equipment

Equipment ID	Description
SLG-1	Motorized Slide Gate at Diversion Structure 1

B. Control Overview

- Slide Gate will remain open.

C. Hardwired interlocks

- None

D. Alarms and Monitoring

1. Monitor Gate status (open and closed) and display on HMI.
2. A "common trouble" alarm is generated for fail to move, or motor over-temperature.
3. An “In Remote” signal is sent to PLC to indicate valve is available for PLC control.

E. Control Modes

- In REMOTE, gate will be controlled by PLC, either automatically or manually. In LOCAL gate will be controlled by the local gate operator control stations.

5.7 Energy Monitoring

A. Process Equipment

Equipment ID	Description
MCC-01 Power Monitor	An energy monitoring relay is located in each of the MCC-01 Cabinet. Power to the Motor Control Center is continuously monitored.

B. Control Overview

- 1. No control

C. Hardwired interlocks

- 1. No interlocks

D. Alarms and Monitoring

1. The measured electrical parameters are available at the energy monitoring front panel display and at the PLC via an Ethernet Modbus network connection. The following parameters are monitored:
   a. Phase volts (3) **
   b. Phase currents (3)
   c. Frequency
   d. Facility real and apparent power, KW **, KVA, KVAR
   e. Facility real and reactive energy, KWhr **, KVAHr
   f. Under voltage alarm**
   g. Over voltage alarm **
   h. Phase reversal**

   ** signals networked to PLC

2. The power monitor shall internally accumulate total kWh and expose this value to the PLC and to SCADA.

3. Historical data shall be retained and accessible from Venice Pump Station Control Center; reporting tools shall consist of daily/weekly/monthly/annual energy usage summaries; the historian control system shall trend the following:

   a. kW (real-time)

   b. kWh (cumulative)

5.8 PLC Health

A. Process Equipment

Equipment ID	Description
Honeywell PLC	Relay in Cabinet LCP1 monitors the health of the PLC

B. Control Overview

1. PLC failure interlocked with VFD "Drive" contactor. Pumps will automatically revert to Emergency Mode, and Pumps will operate controlled by the wet well float switches.

C. Hardwired interlocks

1. PLC "Fail" is interlocked with each VFD.

D. Alarms and Monitoring

1. None.

(END OF ATTACHMENT)

SECTION 17450
SCADA NETWORK AND COMMUNICATIONS

PART 1 - GENERAL

1.01 THE REQUIREMENT

A. This section specifies requirements for PLCs, SCADA, networks, firewalls and data communications shown on the drawings.

B. The Contractor shall furnish, install, configure, test, and document, all copper communications network systems, including cables, switches, firewalls, software, and software licenses. The work includes accessories and appurtenances needed to provide reliable PLC and communications systems, as specified.

C. Operator HMIs:

1. The System Integrator shall create an overview display for the stormwater diversion system at new Honeywell HMIs (in PLC-01) attached to the new Honeywell Control Edge PLCs. Display screens to include alarms, trending, and provide equipment control.
2. Venice pump station will monitor the PLCs, via new cellular connections. As part of the scope of this project, the PLC-01 HMI displays will be replicated on the Venice station's new Honeywell DCS. The Contractor will provide an Allowance for Honeywell to perform Venice configuration and testing.

D. AT&T Firstnet Cellular communications will be provided between PLC-01 and Venice Pump Station. The Contractor to coordinate with the City to arrange installation and testing of the cellular communications and mounting of the Service Provider's cellular modem/routers and antennas.

E. SCADA configuration at Venice Pump Station:

1. Contractor and System Integrator shall coordinate with City and Honeywell control system staff for implementation of control strategies, graphic user interface screens, alarming, reports, and communication connectivity.
2. Contractor and System Integrator shall lead a minimum of two (2) workshops with City to coordinate PLC and HMI approaches and interface requirements.
3. Contractor and System Integrator shall lead a minimum of two (2) field testing sessions to verify stormwater diversion controls and displays at Venice Pump Station.

1.02 RELATED WORK SPECIFIED ELSEWHERE

A. Other Sections of the Specifications, not referenced below, shall also apply to the extent required for proper performance of the WORK of this Section.

1. All Division 16000 Sections.
2. Section 17400 Process Instrumentation and Controls.

1.03 REFERENCE SPECIFICATIONS, CODES AND STANDARDS

A. The following documents referenced shall mean:

1. EIA Electronics Industry Alliance.

2. TIA Telecommunications Industry Association.

3. NEC National Electric Code. NFPA 70.

4. NECA National Electrical Contractors Association.

B. Comply with the applicable provisions of the latest edition of the following standards for design, materials, installation, and testing:

1.	TIA/EIA-568-B	Telecommunications Cabling Standard.
2.	ANSI/ICEA S-83-596	Optical Fiber Premise Distribution Cable.
3.	ANSI/ICEA S-87-640	Optical Fiber Outside Plant Communications Cable.
4.	ANSI/NECA 301	Standard for Installing and Testing Fiber Optic Cable.
5.	TIA/EIA-526-7	Measurement of Optical Power Loss of Installed Single Mode Fiber.
6.	Bellcore GR-20-Core	Generic Requirements for Optical Fiber and Optical Fiber Cable.
7.	TIA/EIA 568-B	Telecommunications Cabling Standard.

1.04 SUBMITTALS

A. See submittal requirements of Section 17400 "Process Instrumentation and Control".

B. Furnish submittals including shop drawings, product literature and datasheets,

C. Network and communications test plans: Submit a detailed test plan including the following:

1. Media to be verified and test methodology.

2. Test equipment to be used with calibration certificate.

3. Testing procedures.

4. Network diagrams.

D. Control Systems testing procedure. See Section 17400.

E. Shop Drawings: The shop drawings shall include a full description of the PLC system, including documentation of operation theory, programming methods, i.e., ladder logic diagram (All contacts, coils, timers, latches and each section of the ladder shall be clearly annotated and defined. The annotation of each of the input contacts representing a field device shall clearly define the status of the device.), data codes and security features, maintenance and trouble-shooting information. Schematics of all cards or units within the system along with point-to-point wiring diagrams shall be furnished after award of contract.

1. The documentation shall, also, provide a sequential flow chart of the logic implemented. The format of the flow chart and the annotation shall be proposed for acceptance by the ENGINEER before implementation.

2. Two sets of the program and documentation shall be forwarded for review and comments at least 30 days before factory test.

3. Control system architecture and interconnection cabling diagrams for the complete system. Include each cable fiber and copper network cable connection.

F. Product data:

1. Manufacturers brochures with proposed materials and options clearly marked.
2. Data sheets, including catalog numbers with code for determining catalog number code. Include data sheets for all cabinet components, instruments, cables, Ethernet switches, firewalls, and cable management.
3. Manufacturer's installation instructions for equipment proposed.
4. Submit results of an un-witnessed test performed prior to the witnessed test. Any deficiencies found are to be noted and corrected before the witnessed test. Unwitnessed Test Results together with any re-testing, to be signed by Contractor as being correct.

G. Test Report results: Submit a hardcopy report for approval by the Engineer:

H. O&M Manual: Include in the submitted O&M Manual the following as a minimum:

1. Manufacturers network device data sheets and installation instructions.
2. System Network Diagram showing device model numbers and network addresses.
3. Documentation of all final device configuration settings, IP addresses and passwords.

1.05 QUALITY ASSURANCE

A. Training: A manufacturer's representative shall supply 40 hours of on-site training if required, for CITY personnel. The training shall include, but not be restricted to, operation of programming unit, trouble shooting of system hardware, software, and program development.

B. Communications system installer qualifications: The communications system installer shall:

1. Demonstrate direct experience with installation and testing of communications systems on at least two similar recent projects in the last three years.
2. Utilize qualified, experienced personnel, familiar with the design, installation, and configuration of communications systems.
3. Provide special tools and equipment needed for the installation and testing of the communications system, including but not limited to tools for terminating and testing copper/fiber-optic cables, jack stands for cable reels or cable winches, and OTDR testing.

1.06 COMMUNICATIONS WITH VENICE PUMP STATION

A. The Contractor to coordinate with the City of LA and the selected Service Provider, to install and test the communications link to Venice Pump Station.

B. The Contractor shall install the Service Providers modems and fiber-optic patch panels in the Local Control Panels (PLC-01).

C. The Contractor to coordinate with Honeywell and the Engineer/City to provide PLC register data to allow proper configuration of the SCADA screens at Venice Pump Station and testing of the communications link to the station.

D. The City's Information Technology Agency (ITA) is responsible for selecting and contract with the EPL (Ethernet Private Line) Service provider to establish the communications link.

PART 2 - PRODUCTS

2.01 PROGRAMMABLE LOGIC CONTROLLER HARDWARE

A. PLC hardware shall be Honeywell - Control Edge with Unit Operations Controller system software, no equal, and provide the following features:

1. All PLC components, including power supplies, racks, CPUs, memory, I/O modules and cables shall be standardized to minimize the spare parts inventory and maximize interchangeability, and to conform to the City's LAWINS Standards.
2. All I/O modules shall be installed with appropriate type and size of Remote Termination Cables (RTP) and associated RTP module for field wiring terminations.
3. All CPUs shall have 16MBIts non-volatile memory for retention of key programming.
4. Each PLC shall have the ability to provide 4GBits of Dynamic memory capacity (RAM) and 2GBits of Program memory capacity (Flash).
5. Each PLC shall have the ability to operate in redundant or non-redundant modes and shall have the capability of a maximum of thirty-one (31) I/O bases and 372 Slots.
6. Each PLC shall be provided with redundant power supplies and shall be sized as required for I/O and field requirements. Power supplies shall provide a minimum of 5VDC @ 3.0A and 24VDC @ 0.6A. Power supply shall be Honeywell 900P01-0101.
7. Input power: 120VAC, 60Hz.

B. PLC hardware shall be:

Honeywell ControlEdge PLC Hardware

Part Number	Manufacturer	Description
900CP1 - 0200	Honeywell	Control Processor Module (CPM), ControlEdge with Unit Operations Controller (UOC) systems software.
900SP1 - 0200	Honeywell	Expansion Processor Module (EPM), ControlEdge 900
900R12 - 0200	Honeywell	12 I/0 Slot Rack
900P01 - 0301	Honeywell	120/240 VAC. 60W Rack Power Supply
900G32 - 0101	Honeywell	Digital Input, 24 VDC, 32 Channel
900H32 - 0102	Honeywell	Digital Output, 24 VDC 32 Channel
900A16 - 0103	Honeywell	Analog Input High Level, 16 Channel
900B01 - 0301	Honeywell	Analog Output, 0 to 20 mA, 4 Channel
900TCK - 0200	Honeywell	Digital I/0 - A/I - Terminal Block
900TEK - 0200	Honeywell	Analog Output - Terminal Block
900TNF - 0200	Honeywell	Filler Block Cover, Spare I/0 Slot

1. PLC I/O modules shall be Honeywell Universal Input/Output Module (900U01-0100), no equal.
2. Interposing relays shall be provided for all relay outputs.

2.02 HUMAN MACHINE INTERFACE HARDWARE

A. Where required, panel mounted HMIs shall be Honeywell, Model HC 900 family, no equal.

B. The panel mounted HMIs shall have a keypad and touch-screen, including dedicated membrane keyboard to access up to 80 preformatted graphic displays.

C. The display screen shall be a minimum of 10.4" LCD color screen.

D. The HMI shall be capable of communicating with the PLC via an Ethernet TCP/IP or Modbus TCP connection.

E. Input power: 120VAC, 60Hz via 24VDC Power Supply.

2.03 PLC AND HMI PROGRAMMING DEVELOPMENT SOFTWARE

A. The PLC programming software shall be UOC compatible Honeywell ControlEdge - Latest Revision.

1. The PLC programming software version for the PLCs shall be certified to run on the latest version of Microsoft Windows.
2. The PLC programming software shall comply with the International IEC 61131-3 standard and support Ladder Diagram, Sequential Function Chart and Structured Text programming language formats.

B. The HMI programming software shall be Honeywell MasterLogic "Station Designer" for HC 900 family, or equal - Latest Revision:

1. The HMI programming software version shall be certified to run on the latest Microsoft Windows platform.
2. The HMI programming software shall be capable of directly accessing tag information in the PLC by using the tag name, and not the memory address.

2.04 PLC APPLICATION SOFTWARE DESIGN CRITERIA

A. PLC Program Design:

1. CONTRACTOR shall organize PLC application software into:
    a. Sections:
        (1) Contains all sequential control logic for a specific unit of operation.
        (2) Each section consists of a general logic subsections, followed by unit operation subsections.
    b. Subsections: Contains all sequential control logic for specific equipment such as a pump, valve or loop.
2. Program Documentation:
    a. Note and describe start of a new program section.
    b. Annotate the PLC program.
    c. Briefly describe the control objectives.
    d. Identify subsections.

e. Subsection documentation includes brief description of control objective followed by a description and tag of the equipment being controlled.

f. CONTRACTOR shall provide an, internal or external, organizational index for PLC application software that can be used to quickly search and locate a specific section, such as:

(1) Flow, pressure and other process variable monitoring.

(2) Control valve or VFD PID control.

(3) Unit pump control.

(4) Unit blower control.

(5) Alarms.

(6) Data communications.

(7) System time-synchronization.

(8) PLC program initialization.

g. The PLC program shall be able to initialize and bring a PLC unit from an inactive condition (e.g., power failure or hardware reset) to a state of operational readiness. Initialization shall include determination of system status prior to start-up of the operating system software and application software. Initialization shall also include the loading of all memory resident software, operator-entered setpoints, timers, counters, queues and all dynamic database values. For example, existing operator-entered setpoints shall not require operator re-entry after a power failure or after the downloading of a new PLC program.

2.05 HMI APPLICATION SOFTWARE DESIGN

A. General:

1. CONTRACTOR shall develop and submit HMI application software in accordance with ASM guidelines and the utility wide HMI standards developed by the City of LA Bureau of Sanitation.

2. The following items outline the key objectives in designing the HMI graphic displays:

a. Easily navigated menus.

b. Provide no more than three (3) mouse actions to navigate to any graphic display.

c. Maintain consistency in graphic display and controls design.

d. Maintain consistent and predictable window operations.

e. Accurate representation of the facility and its operation.

f. Represent control options in an easily understood fashion.

g. Wherever possible, design overview displays similar to the physical layout of the facility. The perspective to the physical layout should be from the local main control room.

h. Provide operator access to process and alarm setpoints, including the following:

(1) Process alarms (High-High, High, Low, and Low-Low)

(2) Control setpoints.

(3) Process timer setpoints.

(4) Sequence setpoints for volume, level, time, etc.

(5) Set or correct the time and date of the Real Time Clock for both the PLC and HMI. The time and date of both the PLC and HMI shall be synchronized to the DCS clock once per day.

i. Provide an alarm/event screen with listing of current and historical alarms and events, e.g., operator login/commands/set-point entry, change in pump/blower/equipment status, including descriptions, times of occurrence, operator acknowledgement and return to normal status.

j. Configure the HMI to provide four levels of user access security.

(1) Visitor: View screens only.

(2) Operator: View screens, enter process setpoints, and select equipment configuration.

(3) Supervisor: All access provided to an Operator, but in addition ability to change alarm setpoints and PID controller parameters.

(4) Administrator: Access to all functions.

B. HMI's graphics screens shall be programmed to comply with City (WINS) latest HMI standards including symbols, colors, layout, navigation. Provide the following:

1. Overall Facility Layout Operating/Monitoring/Troubleshooting screens.
2. Log - in screen.
3. Process status screen (s).
4. Plant configuration screens.
5. Setpoint entry screens.
6. Alarm logs.
7. Event log.
8. Maintenance screen.
9. Communication screen.
10. Trend screen.
11. Report screens.
12. All screens shall have top three lines to display latest alarms, with date and time stamp, with navigational buttons for navigating between screens.
13. Screen graphics presentation to follow the recommendations of ISA-101, and the existing plant SCADA screens symbols, color scheme, and alarming.
14. Provide pop-up windows for mini-trends.
15. Provide active page connectors for navigation.

C. Provide pre-configured local trend displays of the following historical data with a choice of time ranges of at least 1 hr, 4 hrs, 24 hrs and 7 days.

1. Stormwater diversion flow together wet well and/or basin level.
2. Pump on/off together with pump discharge flow and pump kW.
3. Facility kW (15 minute average) and kW/1,000 gallons of pump discharge flow.

D. PLC/HMI I/O DATABASE:

1. CONTRACTOR shall segment all I/O and cards to increase the reliability of all systems and limit any single I/O card failure causing an outage.

2. CONTRACTOR shall provide, coordinate, manage and document a PLC Database in accordance with LAWINS tag naming conventions. The Database shall have the following functions:

   a. The database shall contain all the fields necessary to configure the various points including the following per point type:

      (1) Discrete Point configuration: CONTRACTOR shall provide a PLC/HMI Discrete I/O database of all the analog and discrete points. The I/O list includes the following fields:
         (a) Loop Number.
         (b) Tag Number.
         (c) Type.
         (d) Point description.
         (e) Alarm description 1.
         (f) Alarm description 2.
         (g) Closed Condition Input: Description of the state of the input parameter of device when the field or internal PLC contacts are in the CLOSED position.
         (h) Open Condition Input: Description of the state of the input parameter of device when the field or internal PLC contacts are in the OPEN position.
         (i) Closed Condition Output: Description of the state of the output signal in the CLOSED condition.
         (j) Open Condition Output: Description of the state of the output signal in the OPEN condition.
         (k) PLC name and/or number.
         (l) PLC network address.

      (2) Analog Point Configuration: CONTRACTOR shall provide a PLC/HMI I/O database of all analog points that are communicated to and from the DCS and the HMI. The analog I/O database shall include, but is not limited to, the following fields:
         (a) Attributes that further define the function of the points as listed below: Note that the attributes will be used for sorting and development of the I/O driver configuration. Additional attributes shall be developed to meet the software needs:
            (i) Setpoint read.
            (ii) Setpoint write.
            (iii) Process variable.
            (iv) Flow totalizer read.
            (v) Equipment run time.
         (b) Point description.
         (c) Alarm description 1.
         (d) Alarm description 2.
         (e) Engineering units.
         (f) Scale range.
         (g) Alarm ranges:
            (i) High-High.
            (ii) High.
            (iii) Low.
            (iv) Low-Low.

(v) Signal fail.
(vi) Rate of Change.
(vii) Other.

(h) PLC number.
(i) PLC I/O hardware address.
(j) PLC I/O memory addresses.

E. System Growth:

1. Contractor shall provide twenty (20) percent spare capacity. Spare capacity shall be based on current 'equipped' I/O counts.

F. Operations and Maintenance Manuals: Furnish to the ENGINEER 10 complete sets of Operation and Maintenance manuals. The manuals shall include data sheets, catalog cuts, approved shop drawings, manufacturer's technical manuals, information drawings, etc., for the system, subsystems, and all components, and shall include names, addresses and telephone numbers of equipment suppliers, representatives and repair facilities.

1. This shall include a complete description of the recommended operating procedures, maintenance procedures, and spare/replacement parts list for equipment items with catalog data, diagrams, and drawings or cuts describing the equipment.

2. Each set shall include full size assembly and wiring diagrams; drawings showing "as built" conditions shall be furnished to the CITY.

2.06 PLC PANEL

A. Refer to Section 17400 "Process Instrumentation and Control".

B. Provide 316 stainless steel NEMA 4X PLC cabinet with air conditioner. Size conditioner for a maximum ambient of 110 deg F. Provide cabinet thermal calculations with shop drawing submittal.

C. PLC cabinet to exclude motor starters, VFDs and any 480V devices.

2.07 SPARES

A. The following spare parts shall be provided:

1. One of each type of PLC controller module.

2. One of each type of communications and remote I/O module.

3. One I/O module for each ten of each type installed, with a minimum of 2 per type.

4. One spare PLC power supply.

5. One field termination module of each type for every ten installed, with a minimum of 2 per type.

6. One of each type of preformed interconnection cable.

2.08 MANAGED INDUSTRIAL ETHERNET SWITCH WITH INTEGRAL FIREWALL.

A. Furnish industrial managed Ethernet switches with firewalls as shown on the drawings and complying with the requirements of this Section, to provide network connectivity between network components.

B. The Ethernet switch manufacturer shall be CISCO, Industrial Security Appliance 3000, no exceptions.

C. Provide the switch with the following minimum features:

1. Fan-less metal enclosure. DIN rail or rack mounting. Built for harsh environments.
2. Ports: As required. Minimum of 8 shielded RJ45 10/100 Mbps Ethernet ports with auto negotiation. One Ethernet RJ console port.
3. Support Small Form-factor Pluggable (SFP) transceivers, selectable for copper and single/multi- mode fiber networks. Provide a minimum of 2 SFP ports.
4. SFP fiber transceivers as required.
5. Ethernet/IP support. Port security and access control.
6. Rapid Spanning Tree Protocol, and bandwidth control.
7. Power supply: 120 VAC.
8. Minimum operating temperature range: -40 to 70 deg C (-40 to 158 deg F).

D. Provide threat defense/malware application and 5-year update subscription. License in the name of the City of LA.

2.09 COPPER NETWORK CABLE

A. Category 5, 6 network cable:

1. Cable: CAT 5, 6 UTP, rated indoor/outdoor as required by NEC Article 800.
2. Jacket: FEP/PVC.
3. Conductors: 4 pair, 23 AWG minimum.
4. Manufacturer: Belden, Berk-Tek, General Cable or equal.

PART 3 - EXECUTION

3.01 INSTALLATION

A. Install communications equipment and cables as recommended by the manufacturer and in accordance with TIA-568-C.0/C.1, C.2, C.3.

B. Ensure maximum pulling tensions of communications cables are not exceeded, and cable bends maintain proper radius.

C. Prior to installation, physically inspect cable for damage to the jacket as it is taken from the reel. Do not install damaged cable.

D. Install equipment and cables as recommended by the Manufacturer and in accordance with TIA-568-C.0/C.1, C.2, C.3.

E. Provide all device configuration required to implement the full functionality of the networks/communication system. Document the final configuration parameters, IP addresses, and passwords. Include a copy in the submitted Operations and Maintenance Manuals.

F. Category 5, 6 Ethernet network cable testing.

1. Test Ethernet cables with cable network test set (Fluke LinkIQ or similar) and record results.

2. Measure values and determine pass/fail result for each parameter. Include:

   a. Continuity and attenuation.

   b. Shorts between conductors.

   c. Crossed and reversed pairs.

   d. Cable length.

   e. Bandwidth.

3.02 TESTING - GENERAL

A. All control panels and other control system equipment shall be factory tested to verify all functions and features of the equipment; both the manufacturer's published specifications and compliance with all requirements of these Contract Specifications.

B. The ENGINEER may witness testing of the units.

C. Solid-state logic systems shall be tested as complete assemblies. Testing of individual components or modules will not be acceptable. All testing shall be witnessed by the representative of the City Engineer. All costs for travel, lodging, transportation, meals, per-diem and other related expense shall be paid by the Contractor as part of the Contract Bid price. See General Requirements, Section 01453: Sampling, Testing and Fabrication Inspection.

D. Seven Day Acceptance Test:

1. After startup has been completed, the System shall undergo a seven (7) day acceptance test. The System must run continuously for seven (7) consecutive days. During this period, all System functions shall be exercised, and any System interruption and accompanying component, subsystem, or program failure shall be logged for cause of failure, as well as time of occurrence and duration of each failure. A failure shall cause termination of the seven (7) day acceptance test. When the cause of a failure has been corrected, a new seven (7) day acceptance test shall be started. Skilled technicians shall respond to all trouble calls by the CITY.

2. The technician responding to a System malfunction, must prepare a report which includes details concerning the nature of the complaint or malfunction and the resulting repair action required and taken, plus time and date of occurrence and correction.

3. The System Malfunction Report form shall be submitted to the ENGINEER for review and approval before the time of re-start of testing. Failure to obtain ENGINEER approval for the Report form shall cause postponement of testing.

END OF SECTION

THIS PAGE INTENTIONALLY LEFT BLANK

BUREAU OF ENGINEERING

MACARTHUR LAKE
STORMWATER CAPTURE PROJECT
PROJECT NO. S33WMLRP, S343MSWC, S043MSWC

ATTACHMENTS

JANUARY 2026

City of Los Angeles
California

Department of Public Works
Bureau of Engineering

ENGINEERING
CITY OF LOS ANGELES

THIS PAGE INTENTIONALLY LEFT BLANK

BUREAU OF ENGINEERING

MACARTHUR LAKE
STORMWATER CAPTURE PROJECT
PROJECT NO. S33WMLRP, S343MSWC, S043MSWC

ATTACHMENT 1
PHASING PLAN

JANUARY 2026

City of Los Angeles
California

Department of Public Works
Bureau of Engineering

ENGINEERING
CITY OF LOS ANGELES

THIS PAGE INTENTIONALLY LEFT BLANK

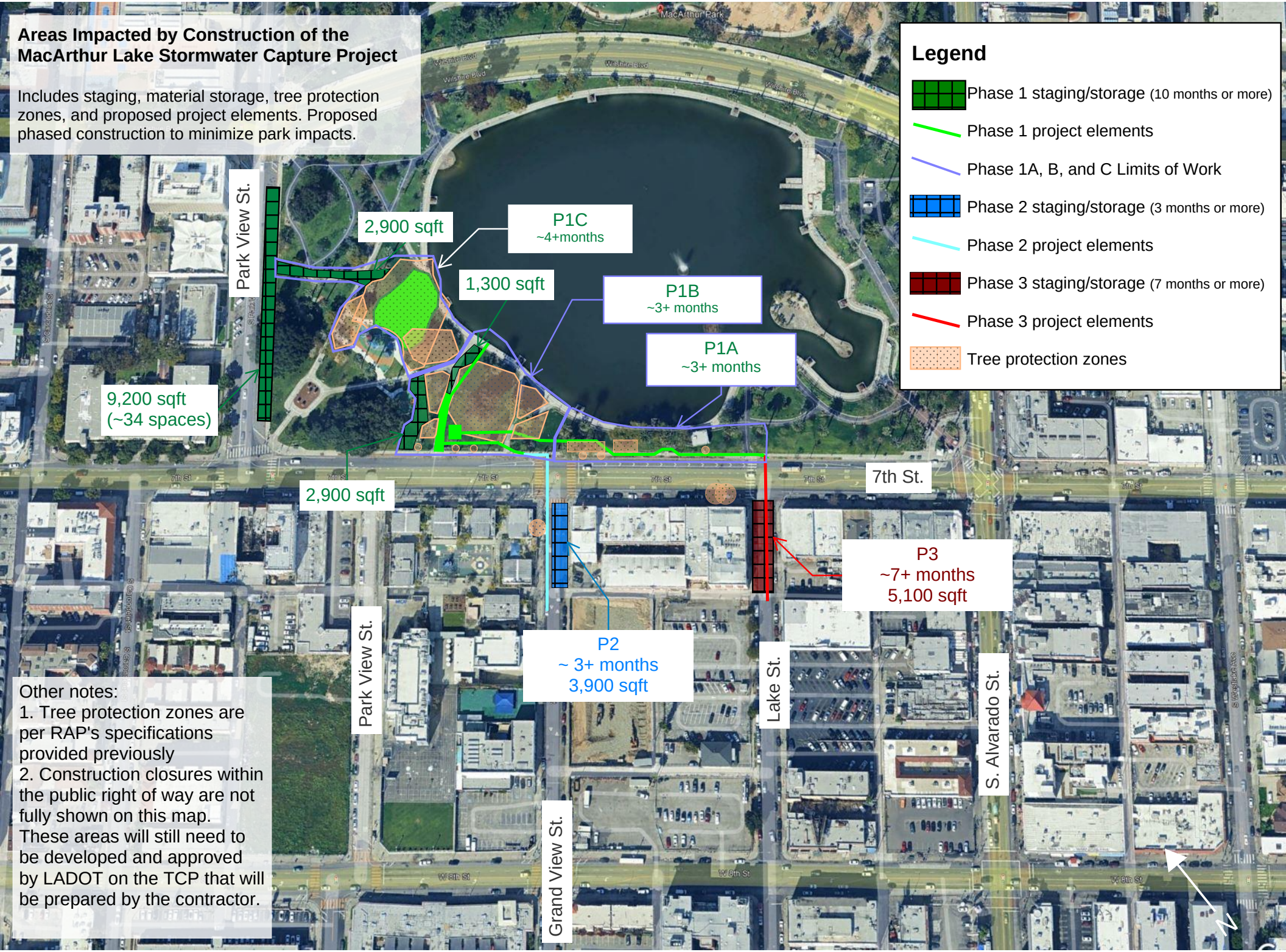
Areas Impacted by Construction of the MacArthur Lake Stormwater Capture Project
Includes staging, material storage, tree protection zones, and proposed project elements. Proposed phased construction to minimize park impacts.
Legend
Phase 1 staging/storage (10 months or more)
Phase 1 project elements
Phase 1A, B, and C Limits of Work
Phase 2 staging/storage (3 months or more)
Phase 2 project elements
Phase 3 staging/storage (7 months or more)
Phase 3 project elements
Tree protection zones
Park View St.
2,900 sqft
P1C
~4+months
1,300 sqft
P1B
~3+ months
P1A
~3+ months
9,200 sqft
(~34 spaces)
2,900 sqft
7th St.
P3
~7+ months
5,100 sqft
P2
~ 3+ months
3,900 sqft
Park View St.
Lake St.
S. Alvarado St.
Grand View St.
Other notes:
1. Tree protection zones are per RAP's specifications provided previously
2. Construction closures within the public right of way are not fully shown on this map. These areas will still need to be developed and approved by LADOT on the TCP that will be prepared by the contractor.

BUREAU OF ENGINEERING

MACARTHUR LAKE
STORMWATER CAPTURE PROJECT
PROJECT NO. S33WMLRP, S343MSWC, S043MSWC

ATTACHMENT 2
SOIL INVESTIGATION: NINYO & MOORE
GEOTECHNICAL EVALUATION REPORT

JANUARY 2026

City of Los Angeles
California

Department of Public Works
Bureau of Engineering

ENGINEERING
CITY OF LOS ANGELES

THIS PAGE INTENTIONALLY LEFT BLANK

Geotechnical Evaluation

MacArthur Lake Rehabilitation Project
Safe Clean Water Program – Measure W
City of Los Angeles, Department of Public Works, Bureau of Sanitation

Los Angeles, California

Carollo Engineers, Inc.

707 Wilshire Boulevard, Suite 3920 | Los Angeles, California 90017

July 1, 2022 | Project No. 211019003



Geotechnical | Environmental | Construction Inspection & Testing | Forensic Engineering & Expert Witness

Geophysics | Engineering Geology | Laboratory Testing | Industrial Hygiene | Occupational Safety | Air Quality | GIS

Ninyo & Moore

Geotechnical & Environmental Sciences Consultants

Ninyo & Moore
Geotechnical & Environmental Sciences Consultants

CELEBRATING 35 YEARS

Geotechnical Evaluation
MacArthur Lake Rehabilitation Project
Safe Clean Water Program – Measure W
City of Los Angeles, Department of Public Works, Bureau of Sanitation
Los Angeles, California

Ms. Inge Wiersema
Carollo Engineers, Inc.
707 Wilshire Boulevard, Suite 3920 | Los Angeles, California 90017

July 1, 2022 | Project No. 211019003

CERTIFIED ENGINEERING GEOLOGIST
JENNIFER R. SCHMIDT
No. 2649
STATE OF CALIFORNIA

Jennifer R. Schmidt, PG, CEG
Senior Geologist

REGISTERED PROFESSIONAL ENGINEER
MADAN CHIRUMALLA
No. 3047
GEOTECHNICAL
STATE OF CALIFORNIA

Madan Chirumalla, PE, GE
Principal Engineer

CERTIFIED ENGINEERING GEOLOGIST
MICHAEL LEWIS PUTT
No. 2341
STATE OF CALIFORNIA

Michael L. Putt, PG, CEG
Principal Geologist

AES/JRS/MLP/MAC/mlc

cc: Ms. Mary Vorissis, Cordoba Corporation

CONTENTS

1	INTRODUCTION	1
2	SCOPE OF SERVICES	1
3	SITE DESCRIPTION	2
4	PROPOSED CONSTRUCTION	3
5	SUBSURFACE EVALUATION AND LABORATORY TESTING	3
6	GEOLOGY AND SUBSURFACE CONDITIONS	4
6.1	Regional Geologic Setting	4
6.2	Site Geology	4
6.2.1	Additional Borings	5
7	GROUNDWATER	6
8	FAULTING AND SEISMICITY	8
8.1	Ground Rupture	8
8.2	Ground Motion	8
8.3	Liquefaction and Seismically Induced Settlement	9
9	ADDITIONAL GEOTECHNICAL CONSIDERATIONS	9
9.1	Methane Hazard	9
9.2	Flood Hazard	10
10	CONCLUSIONS	10
11	RECOMMENDATIONS	11
11.1	Earthwork	11
11.1.1	Pre-Construction Conference	11
11.1.2	Site Preparation	11
11.1.3	Structure Foundation Subgrade Preparation	12
11.1.4	Temporary Excavations and Shoring	12
11.1.5	Construction Dewatering	14
11.1.6	Excavation Bottom Stability	14
11.1.7	Fill Material	15
11.1.8	Fill Placement and Compaction	15
11.1.9	Pipe Bedding	15
11.1.10	Modulus of Soil Reaction	16
11.2	Seismic Design Considerations	16
11.3	Foundations	16

11.3.1 Mat Foundations 17
11.3.2 Spread Footings 17
11.4 Lateral Earth Pressures for Retaining Walls 18
11.5 Uplift Considerations 18
11.6 Corrosivity 18
11.7 Concrete 19
11.8 Drainage 20
11.9 Instrumentation and Documentation of Conditions of Adjacent Properties 20
11.9.1 Documentation of Existing Conditions 20
11.9.2 Construction Vibrations 20
11.9.3 Ground Surface Settlement 21
12 CONSTRUCTION OBSERVATION 21
13 ADDITIONAL EVALUATION 22
14 LIMITATIONS 22
15 REFERENCES 24

TABLES

1 – Groundwater Data in Site Vicinity 6
2 – Groundwater Observations During Our 2019 Subsurface Evaluation 7
3 – Monitoring Well Groundwater Measurements in 2019 7
4 – 2019 California Building Code Seismic Design Criteria 16

FIGURES

1 – Site Location
2 – Site Plan
3 – Boring Locations
4 – Regional Geology
5 – Fault Locations
6 – Earthquake Fault and Seismic Hazard Zones
7 – Flood Hazard Zones
8 – Lateral Earth Pressures for Temporary Cantilevered Shoring
9 – Lateral Earth Pressures for Temporary Cantilevered Shoring Below Groundwater
10 – Lateral Earth Pressures for Braced Excavation (Stiff Clay)
11 – Lateral Earth Pressures for Braced Excavation Below Groundwater (Stiff Clay)

12 – Lateral Earth Pressures for Yielding Retaining Walls
13 – Lateral Earth Pressures for Restrained Retaining Walls
14 – Retaining Wall Drainage Detail
15 – Lateral Earth Pressures for Underground Structures
16 – Uplift Resistance Diagram for Underground Structures

APPENDICES

A – Boring Logs
B – Laboratory Test Results
C – Previous Boring Logs, Monitoring Well Logs, and Laboratory Test Results by Ninyo & Moore, 2019
D – Previous Boring Logs by Southern California Rapid Transit District, 1991

1 INTRODUCTION

In accordance with your request and authorization, we have performed a geotechnical evaluation for the MacArthur Lake Rehabilitation Project located in the City of Los Angeles, California (Figure 1). The purpose of our study was to evaluate the soil and geologic conditions at the site and to prepare geotechnical recommendations regarding the design and construction of the proposed improvements. This report presents our findings, conclusions, and recommendations for the project.

Ninyo & Moore previously performed a preliminary geotechnical evaluation for the project, the results of which are presented in our referenced report dated August 6, 2019 (Ninyo & Moore, 2019b). Our services during our preliminary geotechnical evaluation included drilling, logging, and sampling of six small-diameter, hollow-stem auger borings to depths ranging from approximately 19 to 81½ feet below the ground surface, construction of four monitoring wells in four of the 30-foot-deep borings, and excavation of two hand-auger borings to depths of approximately 8 and 10 feet below the ground surface.

Our services for this phase of the project included performing three additional borings to evaluate the subsurface conditions in the areas within the park where new underground structures and retaining walls are planned. An additional boring is planned on Lake Street where a new meter and valve vault structures, pump station, pre-treatment unit, and diversion structure are proposed. An addendum letter will be prepared to present this additional information, including updated conclusions and recommendations, as appropriate.

2 SCOPE OF SERVICES

Our scope of services performed for this evaluation included the following:

- Project coordination, planning, and scheduling of the subsurface exploration.
- Review of readily available background materials, including published geologic maps and literature, in-house information, and stereoscopic aerial photographs. We also reviewed pertinent geotechnical information and plans provided to us by the Client.
- A field reconnaissance to observe and document the existing site conditions, meet with project and park personnel, and to mark-out the new boring locations for utility clearance by Underground Service Alert.
- Acquisition of a County of Los Angeles Department of Public Health, Environmental Health Drinking Water Program permit for borings deeper than 10 feet.
- Acquisition of a Recreation and Parks right-of-entry permit for working within the park.
- Subsurface exploration consisting of drilling, logging, and sampling of three small-diameter, hollow-stem auger borings to depths ranging from approximately 16½ to 35½ feet below the

ground surface. The borings were logged by a representative from Ninyo & Moore and soil samples were collected for laboratory testing. The borings were backfilled with cement-bentonite grout and the excavated soils were drummed for removal from the site.

- Geotechnical laboratory testing on representative soil samples, including evaluation of in-situ moisture content and dry density, gradation analysis, percentage of particles finer than the No. 200 sieve, Atterberg limits, consolidation potential, direct shear strength, expansion index, and soil corrosivity.

- Analytical laboratory testing on representative soil samples for disposal of the soil drums generated during the subsurface exploration.

- Data compilation and engineering analysis of the information obtained from our background review, subsurface evaluation, and laboratory testing.

- Preparation of this report presenting our findings, conclusions, and recommendations for the design and construction of the proposed improvements.

3 SITE DESCRIPTION

MacArthur Park, formerly known as Westlake Park, is a 30-acre public recreation facility owned by the Department of Recreation and Parks in the city of Los Angeles, California (Figure 1). The park is located southwest of 6th Street, northeast of 7th Street, northwest of Alvarado Street, and southeast of Park View Street. The park is divided into two sections by Wilshire Boulevard, which was constructed across the site in the 1930s. The proposed improvements for this evaluation are located in the southern portion of the park (Figures 2 and 3). The two sections of the park are connected by two concrete tunnels under Wilshire Boulevard, called pedestrian subways (Figure 3) (City of Los Angeles, 1932).

The southern side of the park includes a lake, landscaping, grassy slopes that ascend gently toward the adjacent roadways, and concrete and asphalt concrete paved walkways. The lake covers a large portion of the southern section of the park and several weirs are positioned around the exterior of the lake that are used to adjust the lake levels.

The Los Angeles County Metropolitan Transportation Authority's (Metro) Red and Purple subway lines extend under the southern portion of MacArthur Park and under the lake (Figure 3). We understand that installation of the Metro subway tunnel under the park included cut and cover construction and reconstruction of the lake area that included installation of a lake liner in the 1990s. Based on plans for the Metro Red Line, the lake liner consists of approximately 3 inches of asphalt concrete underlain by approximately 4 inches of crushed aggregate base and an unknown depth of compacted fill (Rail Construction Corporation, 1994a).

The topography on the southern side of the park where the proposed improvements are located is generally sloping from 7th Street down toward the lake with elevations ranging from

approximately 275 feet above mean sea level (MSL) near the intersection of 7th Street and Park View Street and approximately 265 feet above MSL near the intersection of 7th Street and Lake Street to approximately 260 feet above MSL around the lake edge (Cordoba, 2022).

4 PROPOSED CONSTRUCTION

We understand that the proposed improvements for the southern portion of the park consist of several underground structures, including stormwater treatment units near 7th Street between the intersections of Park View Street and Grand View Street and subsurface pump station wet wells, a pretreatment unit, and a diversion structure that will be located on Lake Street. Based on the plans, the underground structures will range in depths from approximately 9 to 26 feet below the ground surface (Cordoba, 2022). A tiered wetlands area constructed with retaining walls will also be located on the western side of the lake. Several meter vault and valve vault structures will be included in the project and will be connected to the other subsurface improvements with 18- to 24-inch-diameter ductile iron and reinforced concrete pipes (Figure 2). We anticipate that the proposed new underground utilities will be constructed using open cut-and-cover construction methods.

Due to the limited space at the location of some of the proposed improvements and the proposed depths of the new underground structures, earthwork for the project will include relatively deep vertical excavations up to approximately 28 feet deep in close proximity to other existing improvements, property lines, and utilities. Shoring is anticipated around the perimeter of the excavations to facilitate construction of the project.

5 SUBSURFACE EVALUATION AND LABORATORY TESTING

Our recent subsurface exploration at the site was performed on April 8, 2022, and consisted of the drilling, logging, and sampling of three small-diameter, hollow-stem auger borings to depths ranging from approximately 16½ to 35½ feet below the ground surface. The borings were drilled using truck-mounted drilling equipment with 8-inch-diameter, hollow-stem augers. The borings were logged by a representative from our firm. The approximate locations of the exploratory borings are presented on Figures 2 and 3. The logs of the exploratory borings are presented in Appendix A.

Laboratory testing of representative samples was performed to evaluate in-situ moisture content and dry density, gradation, percentage of particles finer than the No. 200 sieve, Atterberg limits, consolidation potential, direct shear strength, expansion index, and soil corrosivity. The results of our in-situ moisture content and dry density tests are presented on the boring logs in Appendix A. The remaining laboratory test results are presented in Appendix B.

As discussed, Ninyo & Moore has performed a previous preliminary geotechnical evaluation in the project area involving hollow-stem auger borings, hand auger borings, and monitoring well installations within the northern and southern portions of the park (Ninyo & Moore, 2019b). For reference, Figure 3 also shows the locations of previous borings performed at the site by Ninyo & Moore and others (Southern California Rapid Transit District [RTD], 1991). The boring logs for the previous borings and laboratory test results for Ninyo & Moore's previous evaluation are included in Appendix C. The RTD boring logs are included in Appendix D.

6 GEOLOGY AND SUBSURFACE CONDITIONS

6.1 Regional Geologic Setting

MacArthur Park is located in the northwestern portion of the Los Angeles Basin, which is situated at the northwest end of the Peninsular Ranges geomorphic province of southern California. The Los Angeles Basin has been divided into four structural blocks, bounded by prominent northwest trending fault systems: The Northwestern Block, the Southwestern Block, the Central Block, and the Northeastern Block (Norris and Webb, 1990). The site is located in the Central Block, which is bounded by the Newport-Inglewood fault to the southwest and the Whittier fault and Elysian Hills to the northeast. The central block is characterized by a broad low-lying area (the Downey Plain) located between the Beverly Hills, Coyote Hills Uplift, San Joaquin Hills, and Newport and Huntington Beach Mesas. The site is located near the northern end of the Downey Plain, which is a broad syncline infilled with as much as 35,000 feet of Cretaceous to Pleistocene sedimentary rock (Norris and Webb, 1990). The sedimentary rock is overlain by relatively thick sequences of alluvial deposits.

6.2 Site Geology

Regional geologic mapping (Campbell, et al., 2014) indicates that MacArthur Park is underlain by Holocene to late Pleistocene-age young alluvial deposits, late to middle Pleistocene-age old fan deposits, and early Pliocene-age Puente Formation bedrock. The young alluvial deposits are described as unconsolidated, generally friable, stream-deposited silt, sand, and gravel on flood plains. The old fan deposits are described as slightly to moderately consolidated silt, sand, and gravel deposits. The Puente Formation is described as well-bedded, light gray, siltstone. The regional geologic conditions are shown on Figure 4.

Materials encountered during our subsurface exploration consisted of fill underlain by alluvium and bedrock. The fill was encountered at the ground surface in each boring to depths of approximately 2 to 3 feet. The fill material generally consisted of moist, loose to medium dense, silty sand and clayey sand. The fill soils in borings B-1 and B-3 were underlain by alluvium to a

depth of approximately 8 feet. The alluvium generally consisted of moist, loose silty sand and very stiff lean clay and sandy lean clay. Bedrock materials of the Puente Formation was encountered below the fill in boring B-2 and below the alluvium in borings B-1 and B-3 to the total depths explored of approximately 31½ feet. The bedrock generally consisted of moist, weakly to moderately indurated, soft to moderately soft, clayey siltstone with interbeds of sand. A weak to moderate hydrogen sulfide odor was also observed in the soils at approximately 25 feet below the ground surface in boring B-3. More detailed descriptions of the subsurface materials encountered during our subsurface exploration are presented on the boring logs in Appendix A.

Our observations are generally consistent with our previous borings (Ninyo & Moore, 2019b) and the borings performed by others (RTD, 1991) at the project site. More detailed descriptions of the soils and bedrock encountered in the previous subsurface explorations are presented below and boring logs from these evaluations are presented in Appendices C and D.

6.2.1 Additional Borings

Previous subsurface exploration by Converse Consultants, Inc., performed for Southern California RTD for the Metro Rail Project included geotechnical borings for the Design Unit A170 Metro subway line that crosses below the park (RTD, 1986). Several borings were drilled along the Metro subway alignment from Alvarado Street to Parkview Street. Materials encountered during the subsurface exploration in the park vicinity generally consisted of artificial fill and/or alluvium underlain by bedrock from the Puente formation (RTD, 1986). The fill was encountered to depths of approximately 3 to 7 feet and generally consisted of silty clay, silt, sand, gravel, boulders, and debris. The alluvium was encountered at the ground surface and below the fill to depths of approximately 7 to 25 feet and generally consisted of firm to stiff silty clay, clay, sandy clay, clayey silt, with lesser amounts of medium dense to dense sand and gravel. Bedrock was encountered below the alluvium to the total depths explored of approximately 201 feet. The bedrock generally consisted of siltstone and clayey siltstone with interbedded sandstone (RTD, 1986).

The materials encountered during Ninyo & Moore's previous subsurface exploration (Ninyo & Moore, 2019b) generally consisted of undocumented fill soils, alluvial deposits, and bedrock materials of the Puente Formation. Our previous boring B-2 was located in an asphalt concrete (AC) paved area and the remaining borings were located in unpaved areas. The pavement section at boring B-2 consisted of approximately 4 inches of AC over approximately 3 inches of sandy base.

Undocumented fill soils were encountered under the pavement section in B-2 and at the ground surface in previous borings B-1, B-3 through B-5, MW-1 through MW-4, and HA-1

and HA-2 to depths ranging from approximately 1 to 10 feet below the ground surface. The undocumented fill generally consisted of moist, loose to medium dense silty sand, clayey sand, and sandy silt, and firm to stiff sandy lean clay, with scattered miscellaneous trash and construction debris (Ninyo & Moore, 2019b).

Alluvium was encountered at the ground surface in previous boring B-6 and below the fill in borings B-1 through B-5 and MW-1 through MW-4 to depths ranging from of approximately 4 to 25 feet below the ground surface. The majority of the alluvium consisted of moist to wet, soft to very stiff, silt and lean to fat clay with lesser amounts of very loose to dense silty sand and clayey sand with scattered gravel. In some borings, the clayey alluvial materials became sandy and contained gravel and cobbles near the contact with the underlying bedrock. (Ninyo & Moore, 2019b)

Puente Formation bedrock materials were encountered below the alluvium in the previous borings and monitoring wells to the total depths explored of up to approximately 81½ feet below the ground surface. These materials generally consisted of moist to wet, weakly to strongly indurated, soft to moderately hard, weathered to fresh siltstone and clayey siltstone with thin interbeds of claystone and sand. The bedrock materials were observed to be thinly bedded to laminated (Ninyo & Moore, 2019b).

7 GROUNDWATER

The California Division of Mines and Geology (CDMG, 1998) records indicate that the historic high groundwater at the site is at approximately 20 feet, or more, below the existing ground surface. Additional groundwater data in the park vicinity is presented in Table 1 below.

Table 1 – Groundwater Data in Site Vicinity

Depth to Groundwater (feet)	Distance from Site (feet)	Direction from Site	Data Source	Reference
18½ to 30	100	West	Borings	Converse, 1959
16 and 20*	200	North	Borings	LeRoy Crandall, 1982
6 to 14	100	East	Borings	Foundation Engineering, 1989
28**	0	On Site	Boring	RTD, 1991
29**	100	East	Boring	RTD, 1991
11 to 55	620	South	Monitoring Wells	GeoTracker, 2019
23 to 25	1,120	West	Monitoring Wells	GeoTracker, 2019
7 to 28	1,420	Northeast	Monitoring Wells	GeoTracker, 2019

Notes:
* Seepage
** Depth groundwater first encountered. Artesian conditions also noted on boring logs.

During our previous subsurface evaluation, groundwater was encountered during drilling in borings B-3, B-3A, MW-2, MW-3, at depths of approximately 10, 12, 10, and 5 feet below the ground surface, respectively (Ninyo & Moore, 2019b). Seepage was also encountered in some of

the borings and several of the borings filled with groundwater and/or the groundwater levels encountered during drilling rose to shallower elevations. Table 2 presents more detailed groundwater information as observed during our previous subsurface evaluation in 2019.

Table 2 – Groundwater Observations During Our 2019 Subsurface Evaluation

Location	Groundwater During Drilling (feet)	Groundwater After Completion of Drilling	
		Depth (feet)	Time
B-1	Not Encountered	21	40 Minutes
B-2*	Not Encountered	6	0 Minutes
B-3	10	8	20 Minutes
B-3A	12	8	0 Minutes
B-4	Not Encountered	78	0 Minutes
B-5	Not Encountered	--	--
B-6	Not Encountered	--	--
MW-1	Not Encountered	--	--
MW-2	Not Encountered	--	--
MW-3	5	2.7	30 Minutes
MW-4*	Not Encountered	1.5	30 Minutes
HA-1	Not Encountered	--	--
HA-2	Not Encountered	--	--

Note:
*Seepage zones observed during drilling

It should be noted that the groundwater depths included in Table 2 observed at the time of drilling, or shortly after drilling was finished, are not stabilized. Therefore, the depths to groundwater were recorded several times from the monitoring wells that were installed during our previous evaluation (Ninyo & Moore, 2019b). Table 3 presents our groundwater measurements taken from the monitoring wells after they were installed.

Table 3 – Monitoring Well Groundwater Measurements in 2019

Date	MW-1		MW-2		MW-3		MW-4	
	Depth (feet)	Time	Depth (feet)	Time	Depth (feet)	Time	Depth (feet)	Time
May 30, 2019	--	--	--	--	1.7	1420	1.3	1430
May 31, 2019	21.9	0640	4.2	0650	--	--	--	--
	19.0	1400	4.3	1350	1.5	1315	1.1	1230
June 3, 2019	8.3	0630	4.4	0638	1.8	0654	1.2	0648
	8.3	1436	4.4	1432	1.9	1420	1.2	1413
June 4, 2019	8.3	0632	4.5	0637	1.9	0649	1.2	0645
	8.3	1715	4.4	1720	1.9	1700	1.3	1647
June 6, 2019	8.3	1430	4.5	1440	2.0	1404	1.4	1358
June 7, 2019	8.3	1430	4.5	1435	2.0	1347	1.4	1354

Groundwater was not encountered in our borings during this evaluation. Fluctuations in the level of groundwater at the park may occur due to variations in ground surface topography, subsurface stratification, rainfall, irrigation practices, groundwater pumping, and other factors, which may not have been evident at the time of our evaluation.

8 FAULTING AND SEISMICITY

The site is not located within a State of California Earthquake Fault Zone (formerly known as Alquist-Priolo Special Studies Zone). However, the site is located in a seismically active area, as is the majority of southern California, and the potential for strong ground motion in the project area is considered significant during the design life of the proposed structure. The numerous faults in southern California include active, potentially active, and inactive faults. As defined by the California Geological Survey, active faults are faults that have ruptured within Holocene time, or within approximately the last 11,000 years. Potentially active faults are those that show evidence of movement during Quaternary time (approximately the last 1.6 million years) but for which evidence of Holocene movement has not been established. Inactive faults have not ruptured in the last approximately 1.6 million years. The approximate locations of major faults in the site vicinity and their geographic relationship to the site are shown on Figure 5.

The principal seismic hazards at the subject site are surface fault rupture, ground motion, and liquefaction. A brief description of these hazards and the potential for their occurrences on site are discussed below.

8.1 Ground Rupture

Surface fault rupture is the offset or rupturing of the ground surface by relative displacement across a fault during an earthquake. Based on our review of referenced geologic and fault hazard data, the project site is not transected by known active or potentially active faults. Therefore, the potential for surface rupture is relatively low. However, lurching or cracking of the ground surface as a result of nearby seismic events is possible.

8.2 Ground Motion

Considering the proximity of the site to active faults capable of producing a M_{max} of 6.0 or more, the project area has a high potential for experiencing strong ground motion. The 2019 California Building Code (CBC) specifies that the risk-targeted maximum considered earthquake (MCE_R) ground motion response accelerations be used to evaluate seismic loads for design of buildings and other structures. The MCE_R ground motion response accelerations are based on the spectral response accelerations for 5 percent damping in the direction of maximum horizontal response and incorporate a target risk for structural collapse equivalent to 1 percent in 50 years with deterministic limits for near-source effects. The horizontal peak ground acceleration (PGA) that corresponds to the MCE_R for the project area was calculated as 0.792 g using the 2021 Structural Engineers Association of California [SEAOC]/Office of Statewide Health Planning and Development [OSHPD] seismic design tool (web-based). Spectral response acceleration

parameters, consistent with the 2019 CBC, are also provided in Section 11.2 for the evaluation of seismic loads for the proposed improvements.

Per the 2019 CBC, a site-specific ground motion hazard analysis shall be performed for structures on Site Class D with a mapped MCE_R, 5 percent damped, spectral response acceleration parameter at a period of 1 second (S_1) greater than or equal to 0.2g in accordance with Sections 21.2 and 21.3 of the American Society of Civil Engineers Publication 7-16 (2016) for the Minimum Design Loads and Associated Criteria for Building and Other Structures. A site-specific ground motion hazard analysis was beyond the scope of this evaluation. Furthermore, the planned improvements do not include buildings or structures for human occupancy.

8.3 Liquefaction and Seismically Induced Settlement

Liquefaction is the phenomenon in which loosely deposited granular soils and non-plastic silts located below the water table undergo rapid loss of shear strength when subjected to strong earthquake-induced ground shaking. Ground shaking of sufficient duration results in the loss of grain-to-grain contact due to a rapid rise in pore water pressure, and causes the soil to behave as a fluid for a short period of time. Liquefaction is known generally to occur in saturated or near-saturated cohesionless soils at depths shallower than 50 feet below the ground surface. Factors known to influence liquefaction potential include composition and thickness of soil layers, grain size, relative density, groundwater level, degree of saturation, and both intensity and duration of ground shaking. The potential damaging effects of liquefaction include differential settlement, loss of ground support for foundations, ground cracking, heaving and cracking of slabs due to sand boiling, and/or buckling of deep foundations due to liquefaction-induced ground settlement.

Based on the State of California Seismic Hazard Map for the Hollywood Quadrangle (California Department of Conservation, 1999), the site is not located in an area mapped as being susceptible to seismically induced liquefaction (Figure 6). Based on our subsurface evaluation at the site, the park area is predominantly underlain by clayey fill and alluvium that are underlain by relatively shallow bedrock materials, both of which are not susceptible to liquefaction.

9 ADDITIONAL GEOTECHNICAL CONSIDERATIONS

9.1 Methane Hazard

According to Dibblee (1991), MacArthur Park is located approximately 0.1-mile south of the Los Angeles City Oil Field and 1.1-mile northwest of the Los Angeles Downtown Oil Field. Additionally, the park is located in a mapped City of Los Angeles Methane Buffer Zone (City of Los Angeles, 2004). According to City of Los Angeles Ordinance No. 175790 (City of Los Angeles, Department of Building and Safety [LADBS], 2004), methane gas surveys are needed for proposed buildings

located within City of Los Angeles mapped methane zones. A methane survey may be needed for proposed structures. However, a methane survey was not part of our scope of work for the project.

9.2 Flood Hazard

Based on our review of flood insurance rate maps for the project area (Federal Emergency Management Agency [FEMA], 2009), a portion of MacArthur Park is located within the 100-year Flood Hazard Zone, Zone A (Figure 7). Zone A includes areas to be protected from a 100-year flood by the Federal Flood Protection System under construction at the time of publication of the FEMA map. Risks associated with flooding hazards should be evaluated by the project civil engineer.

10 CONCLUSIONS

Based on the results of our evaluation, it is our opinion that construction of the proposed project improvements is feasible from a geotechnical perspective, provided that the following recommendations are incorporated into the design and construction of the project. In general, the following conclusions were made:

- The project area is generally underlain by variable depths of artificial fill consisting of moist, loose to medium dense, silty sand and clayey sand. Native alluvial deposits underlie the artificial fill and typically consist of moist, loose, silty sand and very stiff lean clay and sandy lean clay. The Puente Formation underlies the fill and native alluvial deposits and generally consisted of moist, weakly to moderately indurated, soft to moderately soft, clayey siltstone.

- Excavations on site are anticipated in undocumented fill, alluvium, and Puente Formation. Excavation of the on-site material should be achievable with heavy earthmoving equipment in good working order. Excavations in bedrock are anticipated to involve increased effort as compared to excavations in the fill and alluvium.

- The on-site undocumented fill, alluvium, and any weathered bedrock materials should be considered as Type C soils and unweathered bedrock materials should be considered Type B soil in accordance with Occupational Safety and Health Administration (OSHA) regulations.

- Based on our review of borings performed by others (RTD, 1986 and 1991), difficult excavating conditions may be encountered during construction where hard, cemented, and/or siliceous bedrock materials are encountered.

- Although groundwater was not encountered in our recent borings, groundwater was encountered at variable depths during our previous evaluation. Shored excavations and construction dewatering should be anticipated where excavations exceed the depth to groundwater. Materials excavated from below groundwater will be in a wet condition.

- The subject site is not located within a State of California Earthquake Fault Zone. The probability of surface fault rupture at the site is considered to be low.

- The site is not susceptible to seismically induced liquefaction.

- The park is located within a mapped City of Los Angeles methane buffer zone. According to the City of Los Angeles Ordinance No. 175790, buildings within a methane zone or a methane buffer zone need to be evaluated for methane concentration and pressure by an approved testing agency.
- The park is located within a FEMA designated 100-year Flood Hazard Zone. Risks associated with flooding hazards should be evaluated by the project civil engineer.
- Our limited laboratory corrosion testing indicates that the site can be classified as corrosive based on California Department of Transportation (Caltrans, 2021) corrosion guidelines.

11 RECOMMENDATIONS

The recommendations presented in the following sections provide geotechnical criteria regarding the design and construction of the proposed site improvements. The recommendations are based on the results of our subsurface evaluation, geotechnical analysis, and our project understanding. The proposed work should be performed in conformance with the recommendations presented in this report, project specifications, and appropriate agency standards.

11.1 Earthwork

Based on our understanding of the project, earthwork at the site is anticipated to consist of site clearing, excavation and recompaction of existing fill, alluvial soils, and bedrock for site preparation, excavations up to approximately 28 feet deep for construction of the subsurface structures vault, trenching and backfilling associated with underground utility installation, and finished grading for establishment of site drainage. Earthwork operations at the site should be performed in accordance with the recommendations provided in the following sections of this report and applicable governing agencies.

11.1.1 Pre-Construction Conference

We recommend that a pre-construction conference be held. The owner and/or their representative, the governing agencies' representatives, the civil engineer, the geotechnical engineer, and the contractor should be in attendance to discuss the work plan, project schedule, and earthwork requirements.

11.1.2 Site Preparation

Prior to performing excavations or other earthwork operations, the area should be cleared of pavements, rubble and debris, surface obstructions, abandoned utilities, vegetation, and other deleterious materials. Existing utilities within the project limits should be re-routed or protected from damage by construction activities. Obstructions that extend below finished grade should be removed and replaced with compacted fill. Materials generated from the

clearing operations should be removed from the project site and disposed of at a legal dumpsite.

11.1.3 Structure Foundation Subgrade Preparation

Based on our review of the preliminary construction drawings (Cordoba, 2022), we anticipate that the majority of the new structures that will involve deeper excavations will expose competent bedrock at the foundation subgrade. Where competent bedrock is encountered, additional remedial grading is not anticipated to be needed unless the foundation subgrade becomes disturbed during excavation or the bedrock materials are expansive. If the foundation subgrade is disturbed, we recommend that the exposed bottom be scarified, moisture-conditioned, and recompacted to a depth of approximately 8 inches, or to the depth that it was disturbed, whichever is deeper. If the foundation subgrade materials are expansive, the materials should be overexcavated to a depth of 24 inches and replaced with non-expansive (i.e., expansion index of 20 or less) granular soils that are processed and compacted as recommended in this report,

Where shallow structures are planned, such as valve vaults, meter vaults, and retaining walls associated with the tiered wetlands area, the foundation subgrade may not extend into bedrock and may expose existing undocumented fill or soft/compressible alluvial soils. In these areas, remedial grading should be performed to remove existing undocumented fill, as well as soft and/or compressible alluvial soils and formational materials, to expose competent alluvium or bedrock. The remedial grading should extend to a depth of 3 feet below the bottom of the foundation, or to competent bedrock, whichever is shallower. The limits of the excavation should extend laterally approximately 3 feet beyond the outside edge of the structure footprint, or a distance equal to the depth of the overexcavation, whichever is farther.

The excavation bottom should be evaluated by our representative during the excavation work. Additional overexcavation of loose, soft, and/or wet areas may be appropriate, depending on our observations during construction. Prior to placing new compacted fill, the exposed bottom should be scarified, moisture-conditioned, and recompacted to a depth of approximately 8 inches.

11.1.4 Temporary Excavations and Shoring

Based on our field exploration, we anticipate that excavations within existing fill, alluvial, and bedrock materials at the site may be accomplished with conventional earthmoving equipment in good working condition. We anticipate that the materials encountered will be comprised

predominantly of moist to wet, clayey materials. Excavations that are close to parallel utilities may encounter loose trench zone materials, which are potentially unstable. In general, fill, alluvium, and weathered bedrock should be treated as “Type C” soils in accordance with the OSHA guidelines. Temporary slopes above the water table for Type C soils should be stable at inclinations of 1:1 (horizontal to vertical) up to a depth of about 4 feet below the existing grade and 1½:1 (horizontal to vertical) for excavations deeper than 4 feet. Unweathered bedrock may be treated as “Type B” soils in accordance with OSHA guidelines. Temporary near-vertical excavations for Type B soils not exceeding a depth of approximately 4 feet should be feasible. Excavations that are unstable or deeper than 4 feet should be laid back to slope inclinations of approximately 1:1 (horizontal to vertical) or flatter. Temporary slopes should be evaluated in the field by the project geotechnical consultant in accordance with OSHA criteria.

Shoring systems should be designed for the anticipated soil conditions using the lateral earth pressure values shown on Figures 8 through 11. The recommended design pressures are based on the assumption that the shoring system is constructed without raising the ground surface elevation behind the shored sidewalls of the excavation, that there are no surcharge loads, such as soil stockpiles and construction materials, and that no loads act above a 1:1 (horizontal to vertical) plane ascending from the base of the shoring system. For a shoring system subjected to the above-mentioned surcharge loads, the contractor should include the effect of these loads on the lateral earth pressures acting on the shored walls.

We anticipate that settlement of the ground surface will occur behind the shored excavation. The amount of settlement depends heavily on the type of shoring system, the contractor’s workmanship, and soil conditions. To reduce the potential for distress to adjacent improvements, we recommend that the shoring system be designed to limit the ground settlement behind the shoring system to ½ inch or less. Possible causes of settlement that should be addressed include settlement during installation of the shoring elements, excavation for structure construction, construction vibrations, and removal of the support system. We recommend that shoring installation be evaluated carefully by the contractor prior to construction and that ground vibration and settlement monitoring be performed during construction.

The contractor should retain a qualified and experienced engineer to design the shoring system. The shoring parameters presented in this report are minimum requirements, and the contractor should evaluate the adequacy of these parameters and make the appropriate modifications for their design. We recommend that the contractor take appropriate measures to protect workers. OSHA requirements pertaining to worker safety should be observed.

11.1.5 Construction Dewatering

Groundwater was not observed in our recent exploratory borings performed for this evaluation. However, groundwater and seepage was observed in our exploratory borings and monitoring wells at relatively shallow depths during our previous subsurface evaluation (Ninyo & Moore, 2019b). As described in our previous report, the shallow groundwater that was observed at the site is probably related to landscape irrigation water that percolates through the more granular surficial fill soils and becomes perched on the less permeable, clayey alluvial soils and siltstone bedrock materials. Based on this condition, consideration should be given to reducing or ceasing irrigation near the planned excavations prior to the start of construction to reduce the potential for encountering seepage or groundwater during earthwork. Even with curtailing of irrigation, fluctuations in the depth to groundwater will occur and shallow groundwater depths should be anticipated during construction. Accordingly, dewatering may be needed and should be anticipated by the contractor for excavations in order to perform work in a dry condition. Where light seepage is encountered, we anticipate that the work area can be dewatered with sump pumps. Where sump pumps are insufficient, a dewatering system may be needed. The dewatering system design should be performed by a specialty dewatering contractor. The dewatering scheme may include pumping of groundwater from well points within or outside of the shoring. Disposal of groundwater should be performed in accordance with guidelines of the Regional Water Quality Control Board.

11.1.6 Excavation Bottom Stability

Excavations that extend close to or below groundwater (before or after dewatering, if needed) are anticipated to encounter wet, loose, or soft ground conditions that will be unstable or unsuitable to support the proposed improvements. In general, unstable bottom conditions for structure foundations as well as pipeline subgrades may be mitigated by overexcavating the excavation bottom approximately 2 feet or more, and replacing the excavated soil with crushed aggregate base or gravel wrapped by filter fabric, such as Mirafi 140N, or equivalent. If aggregate base is used, it should consist of either Caltrans Class II aggregate base or crushed miscellaneous base. Caltrans Class II aggregate base should conform to the State of California Standard Specifications, Section 26 1.02A. Crushed miscellaneous base should conform to the Standard Specifications for Public Works Construction, Section 200 2.4. Aggregate base should be compacted to a relative compaction of 95 percent as evaluated by ASTM International (ASTM) test method D 1557. Field tests to evaluate compaction should be performed during construction. Recommendations for stabilizing excavation bottoms should be based on evaluation in the field by the geotechnical consultant at the time of construction.

11.1.7 Fill Material

We recommend that structure backfill consist of clean, granular, non-expansive soil that meets Greenbook Section 300-3.5 criteria for structure backfill. “Non-expansive” is defined as soil having an expansion index of 20 or less in accordance with ASTM D 4829 (CBC, 2016). In general, the on-site granular soils should be suitable for reuse as fill provided they are free of trash, debris, or other deleterious materials. Clay and silt materials are not suitable for use as structure backfill but may be used as general fill. Wet soils, if encountered, should be allowed to dry to a moisture content slightly above optimum prior to their placement as backfill. Fill should generally be free of rocks or lumps of material in excess of 4 inches in diameter. Excavations within bedrock may generate oversize materials. Rocks or hard lumps larger than approximately 4 inches in diameter should be broken into smaller pieces or should be removed from the site.

Imported soil, if used, should consist of clean, granular material with a very low expansion potential, corresponding to an expansion index of 20 or less. The soil should also be tested for corrosive properties prior to importing. We recommend that the imported materials satisfy the Caltrans (2021) criteria for non-corrosive soils (i.e., soils having a chloride concentration of 500 ppm or less, a soluble sulfate content of approximately 0.15 percent (1,500 ppm) or less, a pH value of 5.5 or higher, and an electrical resistivity of 1,500 ohm-centimeters [ohm-cm] or more). Materials for use as fill should be evaluated by Ninyo & Moore prior to importing. The contractor should be responsible for the uniformity of import material brought to the site.

11.1.8 Fill Placement and Compaction

Fill and trench backfill should be placed and compacted in accordance with project specifications and sound construction practices. Fill materials should be moisture-conditioned to slightly above the optimum laboratory moisture content. The lift thickness for fill soils will vary depending on the type of compaction equipment used, but should generally be placed in horizontal lifts not exceeding 8 inches in loose thickness. Fill materials should be compacted to a relative compaction of 90 percent as evaluated by ASTM D 1557. Special care should be taken to avoid pipe damage when compacting trench backfill above pipes. Fill should be tested for specified compaction level by Ninyo & Moore.

11.1.9 Pipe Bedding

Pipe bedding should be constructed in general accordance with the City of Los Angeles Public Works and “Greenbook” Standard Specifications. Pipelines should be supported on 6 inches or more of granular bedding material such as sand with a sand equivalent value of 30 or more. Bedding material should be placed around the pipe and 12 inches or more above

the top of the pipe. We do not recommend the use of crushed rock for bedding material. It has been our experience that the voids within a crushed rock material are sufficiently large enough to allow fines to migrate into the voids, thereby creating the potential for sinkholes and depressions to develop at the ground surface. Special care should be taken not to allow voids beneath and around the pipe. Bedding material and compaction requirements should be in accordance with the recommendations of this report, the project specifications, and applicable requirements of the appropriate agencies.

11.1.10 Modulus of Soil Reaction

The modulus of soil reaction is used to characterize the stiffness of soil backfill placed on the sides of buried flexible pipelines for evaluating lateral deflection caused by the weight of the backfill above the pipe. We recommend that a modulus of soil reaction of 1,000 pounds per square inch be used for design, provided that granular bedding material is placed adjacent to the pipe, as recommended in this report.

11.2 Seismic Design Considerations

Design of the proposed improvements should be performed in accordance with the requirements of governing jurisdictions and applicable building codes. Table 4 presents the seismic design parameters for the site in accordance with the CBC (2019) guidelines and adjusted MCE_R spectral response acceleration parameters (SEAOC and OSHPD, 2022).

Table 4 – 2019 California Building Code Seismic Design Criteria

Site Coefficients and Spectral Response Acceleration Parameters	Value
Site Class	D
Site Coefficient, F_a	1.0
Site Coefficient, F_v	1.7
Mapped Spectral Response Acceleration at 0.2-second Period, S_s	1.979 g
Mapped Spectral Response Acceleration at 1.0-second Period, S_1	0.704 g
Spectral Response Acceleration at 0.2-second Period Adjusted for Site Class, S_{MS}	1.979 g
Spectral Response Acceleration at 1.0-second Period Adjusted for Site Class, S_{M1}	1.197 g
Design Spectral Response Acceleration at 0.2-second Period, S_{DS}	1.319 g
Design Spectral Response Acceleration at 1.0-second Period, S_{D1}	0.798 g
Maximum Considered Earthquake Geometric Mean (MCE_G) Peak Ground Acceleration, PGA_M	0.931 g

11.3 Foundations

Based our understanding of the proposed construction, new structures may be supported by mat foundations or spread footings bearing on compacted fill. Foundations should be designed in accordance with structural considerations and our geotechnical recommendations. In addition, requirements of the governing jurisdictions, practices of the Structural Engineers Association of California, and applicable building codes should be considered in the design of the structures.

11.3.1 Mat Foundations

Mat foundations should be embedded at a depth of 12 inches below the lowest adjacent ground surface. The mat foundation may be designed using a net allowable bearing capacity of 1,000 pounds per square foot (psf). The allowable bearing capacity may be increased by one-third when considering loads of short duration such as wind or seismic forces. The total and differential settlement corresponding to this allowable bearing load are estimated to be less than approximately 1 inch and ½ inch over a horizontal span of 40 feet, respectively.

Mat foundations bearing on granular compacted fill may be designed using a coefficient of friction of 0.30, where the total frictional resistance equals the coefficient of friction times the dead load. Mat foundations typically experience some deflection due to loads placed on the mat and the reaction of the soils directly underlying the mat. The appropriate contact pressure(s) beneath the bases of mat foundations will vary with their size, shape, and other factors. A design modulus of subgrade reaction (K_v) of 150 kips per cubic foot (kcf) may be used for the subgrade soils in evaluating such deflections. This value is based on a unit square foot area and should be adjusted for the planned mat size. The coefficient of subgrade reaction, K_b, for a mat of a specific width may be evaluated using the following equation:

$$K_b = K_v[(b+1)/2b]^2$$

Where, b is the width of the foundation in feet.

11.3.2 Spread Footings

Spread footings should extend 24 inches below the lowest adjacent finished grade and bear on low-expansion, granular compacted structural fill. Continuous footings should have a width of 18 inches or more. Isolated pad footings should have a width of 24 inches or more. Spread footings should be reinforced in accordance with the recommendations of the structural engineer.

A net allowable bearing capacity of 2,000 psf may be used in the design for spread footings bearing on compacted fill. The bearing capacity may be increased by 200 and 400 psf for each additional foot of width or depth, respectively, up to a value of 3,000 psf. Total and differential static settlements for footings designed and constructed in accordance with these recommendations are estimated to be on the order of 1 inch and ½ inch over a horizontal span of 40 feet, respectively.

Footings bearing on compacted fill may be designed using a coefficient of friction of 0.30, where the total frictional resistance equals the coefficient of friction times the dead load. Footings may be designed using a passive resistance value of 300 psf per foot of depth up

to a value of 3,000 psf. The allowable lateral resistance can be taken as the sum of the frictional resistance and passive resistance provided the passive resistance does not exceed one-half of the total allowable resistance. The passive resistance may be increased by one-third when considering loads of short duration such as wind or seismic forces.

Trenches should not be excavated adjacent to spread footings. If trenches are to be excavated near a continuous footing, the bottom of the trench should be located above a 1:1 (horizontal to vertical) plane projected downward from the bottom of the footing. Utility lines that cross beneath footings should be encased in concrete below the footing.

11.4 Lateral Earth Pressures for Retaining Walls

Lateral earth pressures recommended for design of yielding and restrained retaining walls are provided on Figures 12 and 13, respectively. Passive pressures may be increased by one-third when considering loads of short duration, including wind and seismic loads. Retaining walls should be backfilled with free-draining, granular soil (structure backfill material) with a low-expansion potential. Measures should be taken to reduce the potential for build-up of hydrostatic pressure behind the retaining walls. Drainage design should include free-draining backfill materials and perforated drains as depicted on Figure 14. Solid outlet pipes should be connected to the perforated drains and then routed to a suitable area for discharge. Lateral earth pressures recommended for underground structures are provided in Figure 15.

11.5 Uplift Considerations

For structures that will extend below the water table, uplift forces will need to be considered. Due to previously observed groundwater seepage conditions and low propensity for groundwater to percolate back into the clayey soils and bedrock at the site, hydrostatic uplift forces should be evaluated for relatively shallow groundwater conditions. Specific groundwater elevations to be used during design should be evaluated on the location of the improvement and further geotechnical evaluation as the project design progresses. The resistance to uplift may then be taken as the weight of the structure. Additional uplift resistance may be considered including: 1) installation of tie-down anchors, or 2) extending the footing a selected distance outside the exterior walls of the structure (flanges) as shown on Figure 16.

11.6 Corrosivity

Laboratory testing was performed on selected representative soil samples to evaluate pH, electrical resistivity, water-soluble chloride content, and water-soluble sulfate content. The soil pH and electrical resistivity tests were performed in general accordance with California Test Method (CT) 643. Chloride content test was performed in general accordance with CT 422.

Sulfate testing was performed in general accordance with CT 417. The laboratory test results from this evaluation are presented in Appendix B. The laboratory test results from our 2019 evaluation are presented in Appendix C (Ninyo & Moore, 2019b).

The soil pH ranged from approximately 6.8 to 8.1. The electrical resistivity ranged from approximately 500 to 775 ohm-cm. The chloride content of the samples ranged from approximately 50 to 1,680 ppm. The sulfate content of the tested samples ranged from approximately 0.013 to 0.720 percent (130 to 7,200 ppm). Based on the laboratory test results and Caltrans (2021) corrosion criteria, the project site can be classified as corrosive, which is defined as having earth materials with a chloride concentration of more than 500 ppm, a soluble sulfate concentration of more than 1,500 ppm, a pH of 5.5 or less, or an electrical resistivity of less than 1,100 ohm-cm. If corrosion susceptible improvements are planned on site, we recommend that a corrosion engineer be consulted for further evaluation and recommendations.

11.7 Concrete

Concrete in contact with soil or water that contains high concentrations of water-soluble sulfates can be subject to premature chemical and/or physical deterioration. Based on the American Concrete Institute criteria (2016), the potential for sulfate attack is negligible for water-soluble sulfate contents in soil ranging from 0.00 to 0.10 percent by weight and moderate for water-soluble sulfate contents ranging from 0.10 to 0.20 percent by weight. The potential for sulfate attack is severe for water-soluble sulfate contents ranging from 0.20 to 2.00 percent by weight and very severe for water-soluble sulfate contents over 2.00 percent by weight. The soil samples tested for this evaluation and our previous evaluation (Ninyo & Moore, 2019b) indicate water-soluble sulfate contents ranging from approximately 0.013 to 0.720 percent by weight. Accordingly, the on-site soils are considered to have a negligible to severe potential for sulfate attack. Based on our laboratory testing results and the potential variability in soil conditions at the sites, we recommend that Type V cement, 0.45 water to cement ratio, and 28 days concrete compressive strength of 4,500 psi be considered for the project.

In order to reduce the potential for shrinkage cracks in the concrete during curing, we recommend that the concrete for the proposed improvements be placed with a slump of 4 inches based on ASTM C 143. The slump should be checked periodically at the site prior to concrete placement. We further recommend that concrete cover over reinforcing steel for foundations be provided in accordance with CBC (2019). The structural engineer should be consulted for additional concrete specifications.

11.8 Drainage

Positive surface drainage is imperative for satisfactory site performance. Positive drainage should be provided and maintained to transport surface water away from foundations and other site improvements. Positive drainage is defined as a slope of 2 percent or more over a distance of 5 feet or more away from the foundations. Surface water should not be allowed to pond adjacent to foundation elements.

11.9 Instrumentation and Documentation of Conditions of Adjacent Properties

We recommend that consideration be given to implementing an instrumentation program for evaluating design assumptions, monitoring vibrations at adjacent structures, monitoring deformations of the excavations, and monitoring ground surface settlements. The monitoring program should include seismographs and an array of surface control points. The data obtained should be distributed to appropriate parties during the course of construction.

11.9.1 Documentation of Existing Conditions

We recommend pre-construction condition surveys be performed on structures within approximately 50 feet of the proposed excavations prior to construction. This survey should include locating existing cracks and measuring widths of cracks, in combination with videotape documentation of existing conditions. In addition, interviews should be conducted with utility owners so that existing knowledge about the age, type, and maintenance history of affected utilities is available prior to construction.

11.9.2 Construction Vibrations

People can perceive vibrations from construction activities at significantly lower levels than might cause cosmetic damage to structures. Jones & Stokes (2004) indicate that transient vibrations from construction activities may be noticeable. The vibrations may be disturbing and result in complaints and/or damage claims at peak particle velocities as low as 0.2 to 0.6 inch per second. However, these vibration levels are well below the level considered to cause cosmetic damage to residential construction.

Vibration caused by construction activities may be monitored in terms of peak particle velocity during construction. To monitor the peak particle velocity, seismographs could be positioned at the construction site and monitored at selected intervals during construction. Consideration should be given to locating one seismograph close to the construction activity, another at the nearest building, and a third at a building farther away. Additional seismographs should be located at various structures farther from the construction activities to monitor vibrations as a

function of distance from the site. After review of the data obtained, the number of seismographs may be reduced at the discretion of the client and the geotechnical consultant.

11.9.3 Ground Surface Settlement

We recommend that consideration be given to installing arrays of ground surface settlement points around shored excavations. The settlement points should be installed near the excavations at approximately 20-foot spacing. We recommend that the contractor be responsible for maintaining total settlement at any survey point to less than ½ inch. If the settlements reach this limit, we recommend that a further review of construction methodologies be performed and appropriate changes be made.

It is also advisable to install and monitor survey points on nearby structures. In this way, a record of the performance of the structure will be maintained. This information, in combination with pre-construction surveys, is helpful in reducing the potential for damage claims regarding pre-existing cracks and to facilitate settlement of legitimate damage claims.

12 CONSTRUCTION OBSERVATION

The recommendations provided in this report are based on our understanding of the proposed project and our evaluation of the data collected based on subsurface conditions disclosed by widely spaced exploratory borings. It is imperative that the geotechnical consultant checks the interpolated subsurface conditions during construction. We recommend that Ninyo & Moore review the project plans and specifications prior to construction. It should be noted that, upon review of these documents, some recommendations presented in this report may be revised or modified.

During construction, we recommend that the duties of the geotechnical consultant include, but not be limited to, the following:

- Observing site clearing, grubbing, and removal of existing improvements.
- Observing excavation bottoms and the placement and compaction of fill.
- Evaluating imported materials prior to their use as fill, if used.
- Performing field tests to evaluate fill compaction.
- Observing foundation excavations for bearing materials and cleaning prior to placement of reinforcing steel or concrete.
- Performing material testing services, including concrete compressive strength and steel tensile strength tests and inspections.

The recommendations provided in this report assume that Ninyo & Moore will be retained as the geotechnical consultant during the construction phase of this project. If another geotechnical consultant is selected, we request that the selected consultant indicate to the owner and to our firm in writing that our recommendations are understood and that they are in full agreement with our recommendations.

13 ADDITIONAL EVALUATION

An additional boring is planned for excavation on Lake Street in the vicinity of the proposed meter and valve vault structures, pump station, pre-treatment unit, and diversion structure (Figure 2). The encroachment permit for drilling in the City of Los Angeles right-of-way was recently issued and the boring is anticipated to be drilled, logged, and sampled by a representative of Ninyo & Moore on July 8, 2022. After laboratory testing and geotechnical analyses has been performed, an addendum letter will be issued for this report. The letter will include a boring location figure, boring logs, laboratory test results, and any revised or additional recommendations for the proposed improvements on Lake Street, as needed.

14 LIMITATIONS

The field evaluation, laboratory testing, and geotechnical analyses presented in this geotechnical report have been conducted in general accordance with current practice and the standard of care exercised by geotechnical consultants performing similar tasks in the project area. No warranty, expressed or implied, is made regarding the conclusions, recommendations, and opinions presented in this report. There is no evaluation detailed enough to reveal every subsurface condition. Variations may exist and conditions not observed or described in this report may be encountered during construction. Uncertainties relative to subsurface conditions can be reduced through additional subsurface exploration. Additional subsurface evaluation will be performed upon request. Please also note that our evaluation was limited to assessment of the geotechnical aspects of the project, and did not include evaluation of structural issues, environmental concerns, or the presence of hazardous materials.

This document is intended to be used only in its entirety. No portion of the document, by itself, is designed to completely represent any aspect of the project described herein. Ninyo & Moore should be contacted if the reader requires additional information or has questions regarding the content, interpretations presented, or completeness of this document.

This report is intended for design purposes only. It does not provide sufficient data to prepare an accurate bid by contractors. It is suggested that the bidders and their geotechnical consultant perform an independent evaluation of the subsurface conditions in the project areas. The

independent evaluations may include, but not be limited to, review of other geotechnical reports prepared for the adjacent areas, site reconnaissance, and additional exploration and laboratory testing.

Our conclusions, recommendations, and opinions are based on an analysis of the observed site conditions. If geotechnical conditions different from those described in this report are encountered, our office should be notified, and additional recommendations, if warranted, will be provided upon request. It should be understood that the conditions of a site could change with time as a result of natural processes or the activities of man at the subject site or nearby sites. In addition, changes to the applicable laws, regulations, codes, and standards of practice may occur due to government action or the broadening of knowledge. The findings of this report may, therefore, be invalidated over time, in part or in whole, by changes over which Ninyo & Moore has no control.

This report is intended exclusively for use by the client. Any use or reuse of the findings, conclusions, and/or recommendations of this report by parties other than the client is undertaken at said parties' sole risk.

15 REFERENCES

Abrahamson, N.A., Silva, W.J. and Kamai, R., 2014, Summary of the ASK14 Ground Motion Relation for Active Crustal Regions, Earthquake Spectra: Vol. 30, No. 3, pp. 1025-1055, dated August.

American Concrete Institute, 2016, ACI Manual of Concrete Practice.

American Concrete Institute, 2019, Building Code Requirements for Structural Concrete (ACI 318-19) and Commentary (ACI 318R-19).

American Concrete Institute (ACI), 2016, ACI Manual of Concrete Practice.

American Society of Civil Engineers (ASCE), 2016, Minimum Design Loads and Associated Criteria for Building and Other Structures, ASCE Standard 7-16.

Applied Technology Council (ATC), 2022, Hazards by Location, https://hazards.atcouncil.org/#/.

ASTM International (ASTM), 2016, Annual Book of ASTM Standards, West Conshohocken, Pennsylvania.

Atik, Linda L. and Sitar, N., 2010, Seismic Earth Pressures on Cantilever Retaining Structures, ASCE Journal of Geotechnical and Geoenvironmental Engineering, Vol. 136, No. 10, October 1.

Boore, D.M., Stewart, J.P., Seyhan, E., and Atkinson, G.M., 2014, NGA-West2 Equations for Predicting PGA, PGV, and 5% Damped PSA for Shallow Crustal Earthquakes, Earthquake Spectra, Vol. 30, No. 3, pp. 1057-1085, dated August.

Bowles, J.E., 1996, Foundation Analysis and Design, Fifth Edition, The McGraw-Hill Companies, Inc.

Bozorgnia, Y. and Campbell, K.W., 2004, The Vertical-to-Horizontal Response Spectral Ratio and Tentative Procedures for Developing Simplified V/H and Vertical Design Spectra, Journal of Earthquake Engineering, Vol. 8, No. 2, pp. 175-207.

Brandenberg, S.J., Bellana, N., and Shantz, T., 2009, Shear Wave Velocity as Function of SPT Penetration Resistance and Vertical Effective Stress at California Bridge Sites, Soil Dynamics and Earthquake Engineering, In Press, Corrected Proof, Available online 26 May 2010.

Building Seismic Safety Council, 2009, National Earthquake Hazards Reduction Program (NEHRP) Recommended Seismic Provisions for New Buildings and Other Structures (FEMA P-750).

California Building Standards Commission, 2019, California Building Code: California Code of Regulations, Title 24, Part 2, Volumes 1 and 2, based on the 2018 International Building Code.

California Department of Conservation, Division of Mines and Geology, State of California, 1998, Seismic Hazard Report for the Hollywood 7.5-Minute Quadrangle, Los Angeles County, California: Open-File Report 026.

California Department of Conservation, Division of Mines and Geology, State of California, 1999, Seismic Hazard Zones Official Map, Hollywood Quadrangle, 7.5-Minute Series: Scale 1:24,000, Open-File Report 98-17, dated March 25.

California Department of Conservation, Division of Mines and Geology, State of California, 2014, Earthquake Zones and Seismic Hazard Zones, Hollywood Quadrangle, 7.5-Minute Series: Scale 1:24,000.

California Department of Transportation, 2021, Corrosion Guidelines, Version 3.0, Division Engineering Services, Materials Engineering and Testing Services, Corrosion Technology Branch, Version 3.2, dated May.

California Geological Survey (CGS), 2008, Guidelines for Evaluating and Mitigating Seismic Hazards in California, Special Publication 117A, dated September 11.

California Geological Survey (CGS), 2018, Earthquake Fault Zones, A Guide for Government Agencies, Property Owners/Developers, and Geoscience Practitioners for Assessing Fault Rupture Hazards in California: Special Publication 42.

Campbell, R.H., Wills, C.J., Irvine, P.J., and Swanson, B.J., 2014, Preliminary Geologic Map of the Los Angeles 30 x 60 Quadrangle, California, Version 2.0.

City of Los Angeles, 1932, Pedestrian Subways Under Wilshire Boulevard Between Alvarado Street and Park View Street in General Douglas MacArthur Park, DL-1227 and DL-1228, Pages 1 and 2, dated August 3.

City of Los Angeles, Department of Building and Safety (LADBS), 2004, Ordinance No. 175790, Division 71, Methane Seepage Regulations, Section 91.7103, General Methane Mitigation Requirements, dated March 29.

City of Los Angeles, Department of Building and Safety (LADBS), 2014, Site Testing Standards for Methane, Bulletin P/BC 2014-101.

City of Los Angeles, Department of Building and Safety (LADBS), 2017, Guidelines for Storm Water Infiltration, Information Bulletin / Public – Building Code, Document No.: P/BC 2017-118, dated January 1.

City of Los Angeles, Department of Building and Safety, 2019, Parcel Profile Report, dated April 2.

City of Los Angeles, Department of City Planning, 2019, Zoning Information and Map Access System (ZIMAS), http://zimas.lacity.org/.

City of Los Angeles, Department of Public Works, 2004, Methane and Methane Buffer Zones, City of Los Angeles, dated March 31.

City of Los Angeles, Bureau of Engineering Department of Public Works, 2019, NavigateLA, https://navigatela.lacity.org/.

Converse Foundation Engineering Company, 1959, Foundation investigation, Proposed Gilbert-Rothschild Building, Wilshire Boulevard and Parkview Street, Los Angeles, California, Project No. 58-574-A, dated January 14.

Cordoba Corporation, 2022, Civil Site Plan for the MacArthur Park Lake Stormwater Capture Project, MacArthur Lake Park, 2230 6th Street, Los Angeles, CA 90057, 30% Design Drawings, Sheet Nos. CS101 through CS110, dated May 6 and May 9.

Dibblee, T.W., Jr., 1991, Geologic Map of the Hollywood and Burbank (South 1/2) Quadrangles: Dibblee Foundation, DF-30, Scale 1:24,000.

Federal Emergency Management Agency (FEMA), 2018, Flood Insurance Rate Map, Los Angeles County, California and Incorporated Areas, dated December 21.

Foundation Engineering Co., Inc., 1989, Proposed Commercial Buildings at 600 S. Alvarado Street, Los Angeles, California, dated December 11.

Google Earth, 2022, http://earth.google.com.

Jennings, C.W., and Bryant, W.A., 2010, Fault Activity Map: California Geological Survey, California Geologic Data Map Series, Map No. 6, Scale 1:750,000.

Jones and Stokes, 2004, Transportation and Construction Induced Vibration Guidance Manual, California Department of Transportation, Environmental Program, Environmental Engineering, Noise, Vibrations, and Hazardous Waste Management Office, dated June.

LeRoy Crandall and Associates, 1982, Report of Foundation Investigation, Proposed Park View Plaza, 6th and Park View Streets, Los Angeles, California, for Park View Plaza Associates, Ltd., Job No. A-82115, dated June 11.

Los Angeles Department of Parks, 1934, Westlake Park, Proposed Drain and Overflow for the Lake, Plan No. DL2504, dated May 29.

Ninyo & Moore, 2019a, Technical Memorandum, MacArthur Park Lake Project, Safe Clean Water Program – Measure W, City of Los Angeles, Department of Public Works, Bureau of Sanitation, Los Angeles, California, Project No. 211019001, dated April 23.

Ninyo & Moore, 2019b, Preliminary Geotechnical Evaluation, MacArthur Park Lake Project, Safe Clean Water Program – Measure W, City of Los Angeles, Department of Public Works, Bureau of Sanitation, Project No. 211019002, dated August 6.

Ninyo & Moore, 2021, Proposal for Geotechnical Evaluation, MacArthur Park Lake Rehabilitation Project, Safe Clean Water Program – Measure W, City of Los Angeles, Department of Public Works, Bureau of Sanitation, Project No. 211019002, dated October 21.

Norris, R.M., and Webb, R.W., 1990, Geology of California, Second Edition: John Wiley & Sons.

Public Works Standard, Inc., 2018, The "Greenbook": Standard Specifications for Public Works Construction, with Errata No. 1, dated 2019: BNI Building News, Vista, California.

Rail Construction Corporation, Metro Red Line, 1994a, LA CBD to North Hollywood, Wilshire/Alvarado to Wilshire/Vermont, Lake Paving Profile & Details, Contract No. B-201, Drawing No. C-032, Revision 3, Sheet No. 55, dated May 12.

Rail Construction Corporation, Metro Red Line, 1994b, LA CBD to North Hollywood, Wilshire/Alvarado to Wilshire/Vermont, Pocket Track, General Plan and Profile, Contract No. B-201, Drawing No. S-001, Revision 1, Sheet No. 114, dated May 12.

State of California, State Water Resources Control Board, 2019, GeoTracker Database System, http://geotracker.swrcb.ca.gov/.

Structural Engineers Association of California/Office of Statewide Health Planning and Development (SEAOC/OSHPD), 2022, Seismic Design Maps, https://seismicmaps.org/.

Southern California Rapid Transit District (RTD), 1986, Design Unit A170, Location of Borings and Geologic Section, Project No. A-171 and 83-1101, Drawing No. S-002, Revision 4, Sheet No. 085, dated November 5.

Southern California Rapid Transit District (RTD), 1991, LA CBD to North Hollywood, Wilshire/Alvarado Line, Boring Logs II, Project No. A-171, Drawing No. S-010, Revision 1, Sheet Nos. 093, 094, 098, 099, 100 - 102, dated September 20.

United States Geological Survey, 1897, California, Los Angeles Quadrangle, Los Angeles Sheet, Scale 1:62,500.

United States Geological Survey, 1928, Los Angeles Quadrangle, California-Los Angeles County, 7.5 Minute Series: Scale 1:24,000.

United States Geological Survey, 2008, National Seismic Hazard Maps, http://geohazards.usgs.gov/cfusion/hazfaults_search/hf_search_main.cfm.

United States Geological Survey, 2018, Hollywood Quadrangle, California-Los Angeles County, 7.5 Minute Series: Scale 1:24,000.

USDA, Aerial Photograph Date 12-4-52, Flight AXJ-7K, Number 119 and 120, Scale 1:20,000.

USDA, Aerial Photograph Date 5-22-38, Flight AXJ-26, Number 29, Scale 1:20,000.

FIGURES

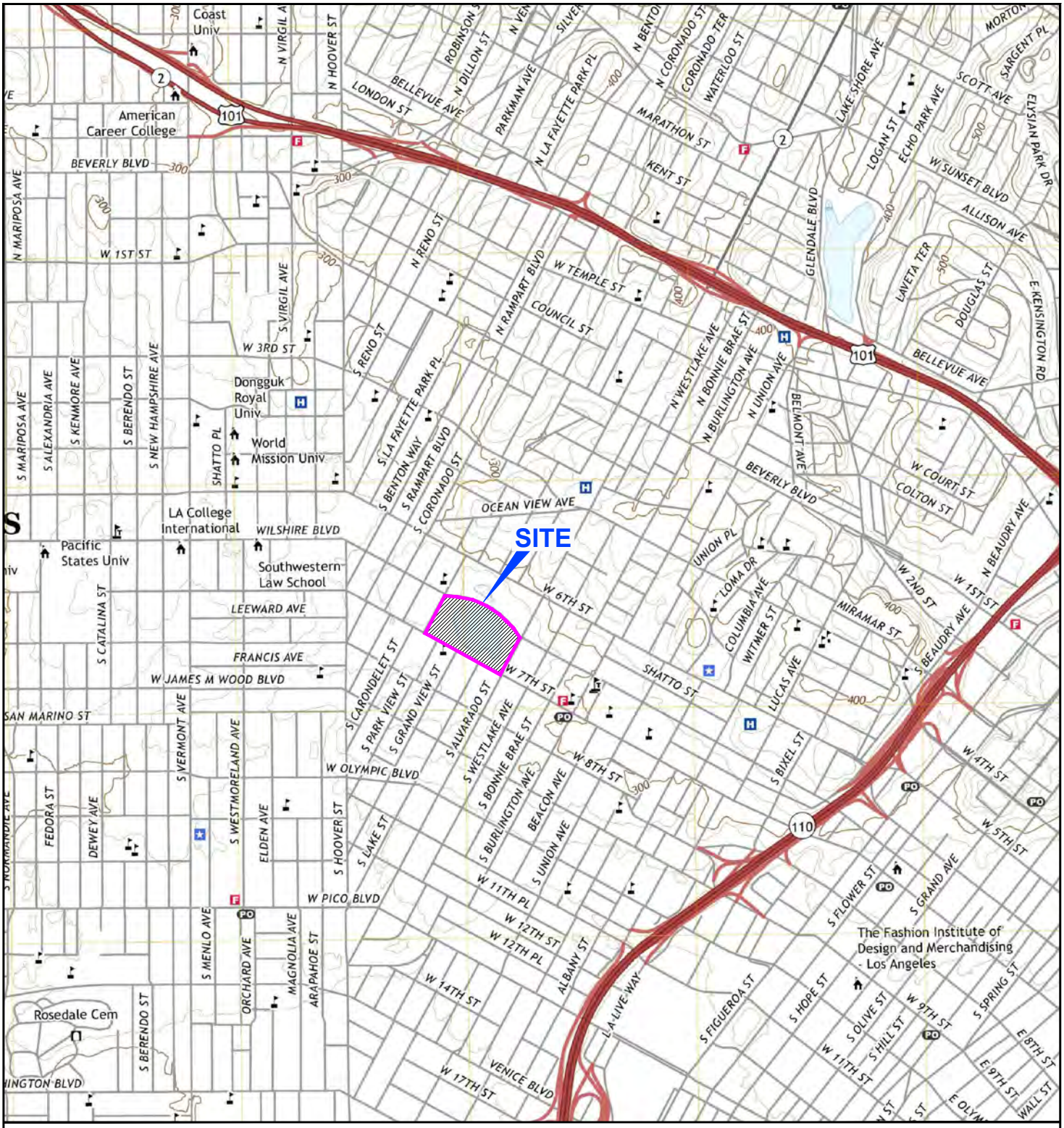

NOTE: DIMENSIONS, DIRECTIONS AND LOCATIONS ARE APPROXIMATE. I REFERENCE: USGS, 2018.

N

FEET

0 2,000 4,000

1_211019003_SL.dwg 06/09/2022 (June 2022) GK

FIGURE 1

SITE LOCATION

MACARTHUR LAKE REHABILITATION PROJECT
LOS ANGELES, CALIFORNIA

211019003 I 7/22

Ninyo & Moore
Geotechnical & Environmental Sciences Consultants

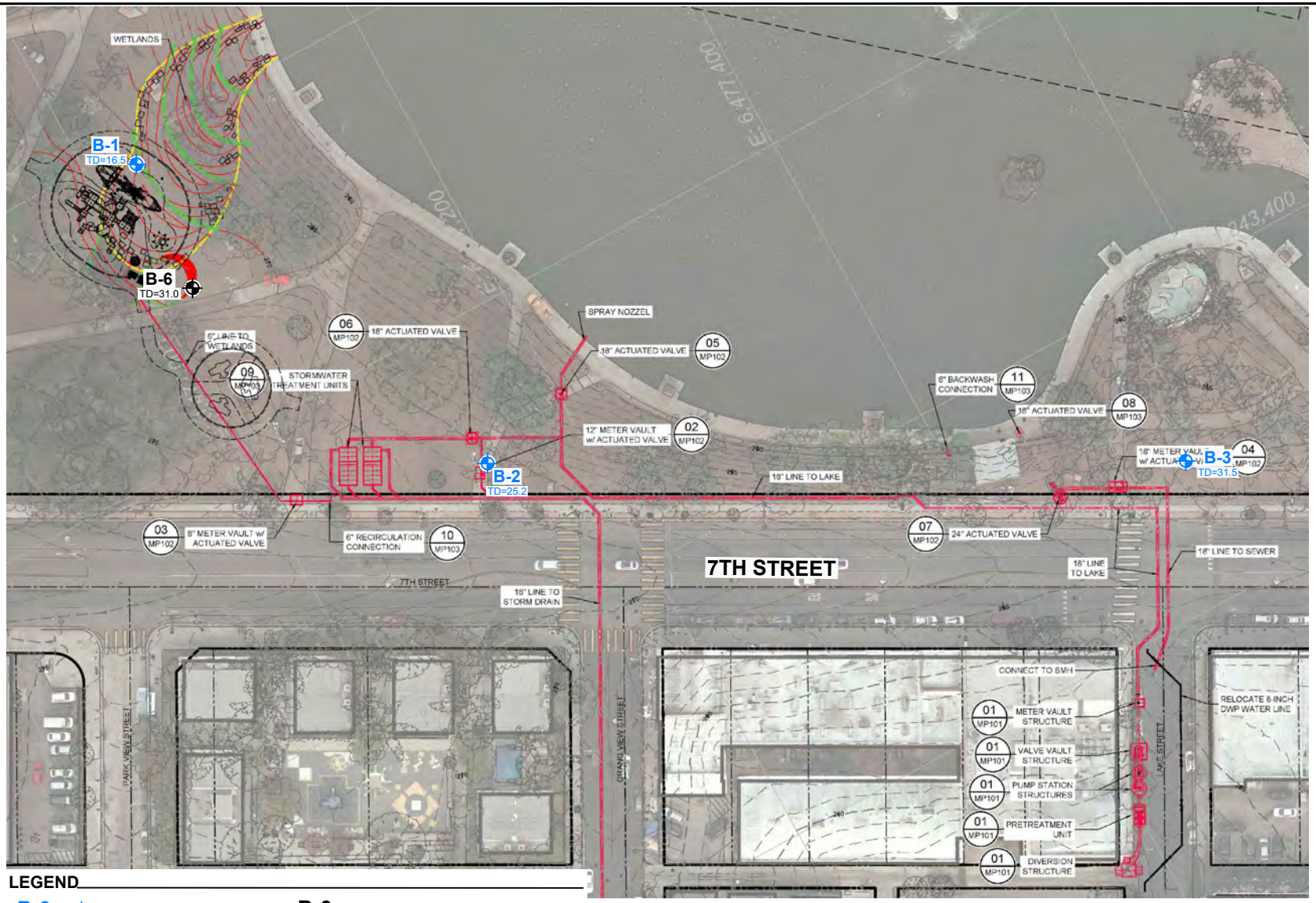

LEGEND

B-3 TD=31.5 — BORING; TD=TOTAL DEPTH IN FEET

B-6 TD=31.0 — BORING (NINYO & MOORE, 2019); TD=TOTAL DEPTH IN FEET

FEET

0 100 200

NOTE: DIMENSIONS, DIRECTIONS AND LOCATIONS ARE APPROXIMATE. I REFERENCE: CORDOBA CORPORATION, 2022.

3_211019003_SP.dwg 06/27/2022 (June 2022) GK

FIGURE 2

SITE PLAN

MACARTHUR LAKE REHABILITATION PROJECT
LOS ANGELES, CALIFORNIA

211019003 I 7/22

Ninyo & Moore
Geotechnical & Environmental Sciences Consultants



LEGEND

- B-3 TD=31.5 — BORING; TD=TOTAL DEPTH IN FEET
- B-6 TD=31.0 — BORING (NINYO & MOORE, 2019); TD=TOTAL DEPTH IN FEET
- MW-4 TD=32.0 — MONITORING WELL (NINYO & MOORE, 2019); TD=TOTAL DEPTH IN FEET
- HA-2 TD=10.0 — HAND AUGER (NINYO & MOORE, 2019); TD=TOTAL DEPTH IN FEET
- 11-11 TD=78.0 — BORING (SOUTHERN CALIFORNIA RAPID TRANSIT (RTD), 1991); TD=TOTAL DEPTH IN FEET
- PIPE 2 — POLYVINYL CHLORIDE DRAINAGE PIPE
- EXISTING METRO SUBWAY TUNNEL
- EXISTING PEDESTRIAN SUBWAY

FEET
0 200 400

NOTE: DIMENSIONS, DIRECTIONS AND LOCATIONS ARE APPROXIMATE. I REFERENCE: GOOGLE EARTH, 2022.

3_211019003_BMWL.dwg 06/27/2022 (June 2022) GK

FIGURE 3

Ninyo & Moore
Geotechnical & Environmental Sciences Consultants

BORING LOCATIONS

MACARTHUR LAKE REHABILITATION PROJECT
LOS ANGELES, CALIFORNIA

211019003 I 7/22

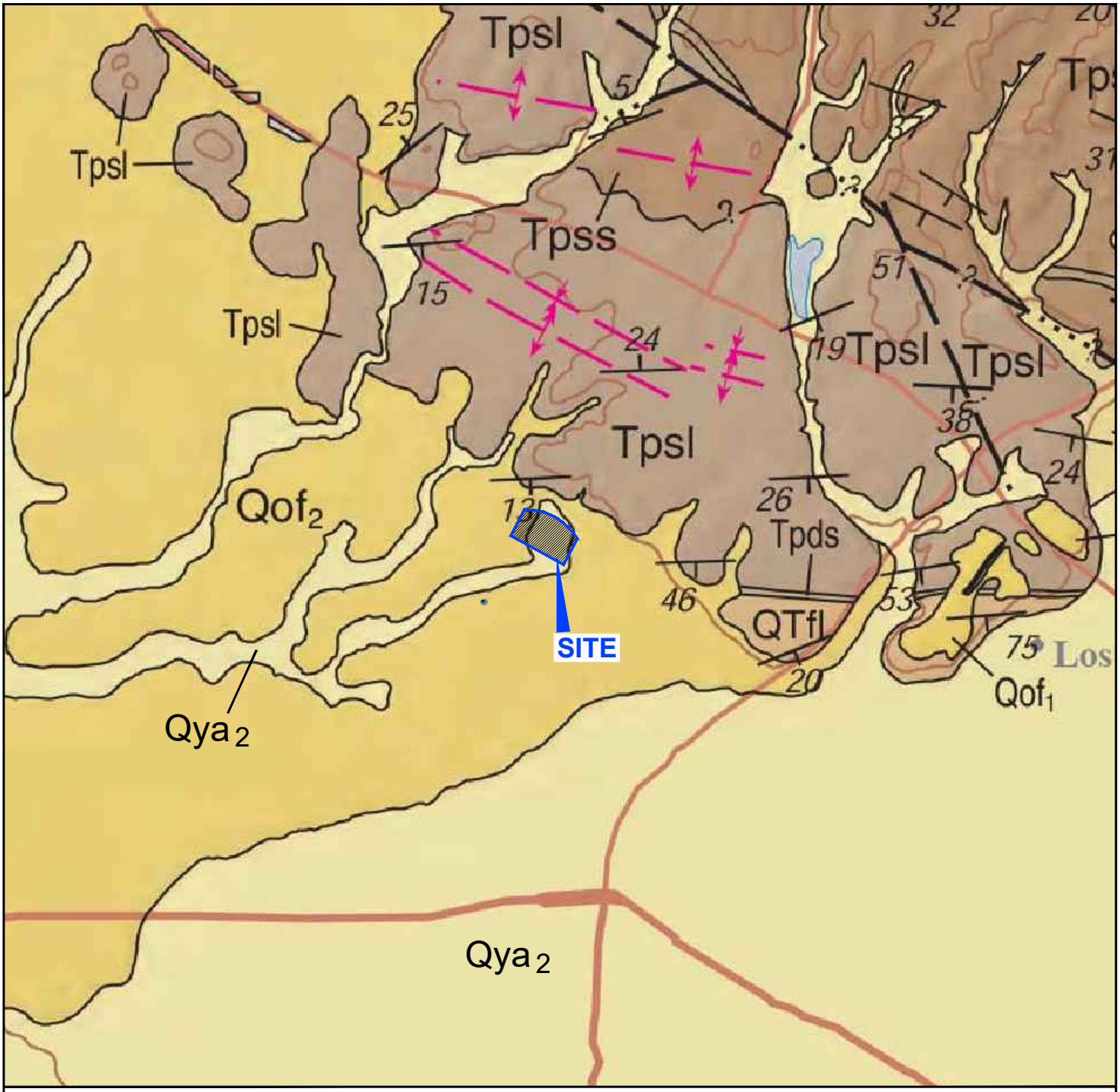

REFERENCE: CAMPBELL, R.H., WILLS, C.J., IRVINE, P.J., AND SWANSON, B.J., 2014.

LEGEND

- Qya_2 YOUNG ALLUVIUM
- Qof_2 OLD FAN DEPOSITS
- Tpsl PUENTE FORMATION
- FAULT; DASHED WHERE INFERRED, DOTTED WHERE BURIED
- GEOLOGIC CONTACT; DASHED WHERE INFERRED
- 46 STRIKE AND DIP OF BEDDING
- SYNCLINE; DASHED WHERE INFERRED, DOTTED WHERE BURIED
- ANTICLINE; DASHED WHERE INFERRED, DOTTED WHERE BURIED

N

FEET

0 3,000 6,000

NOTE: DIMENSIONS, DIRECTIONS AND LOCATIONS ARE APPROXIMATE.

4_21101003_RG.dwg 08/09/2022 (June 2022) GK

FIGURE 4

Ninyo & Moore
Geotechnical & Environmental Sciences Consultants

REGIONAL GEOLOGY

MACARTHUR LAKE REHABILITATION PROJECT
LOS ANGELES, CALIFORNIA

211019003 I 7/22

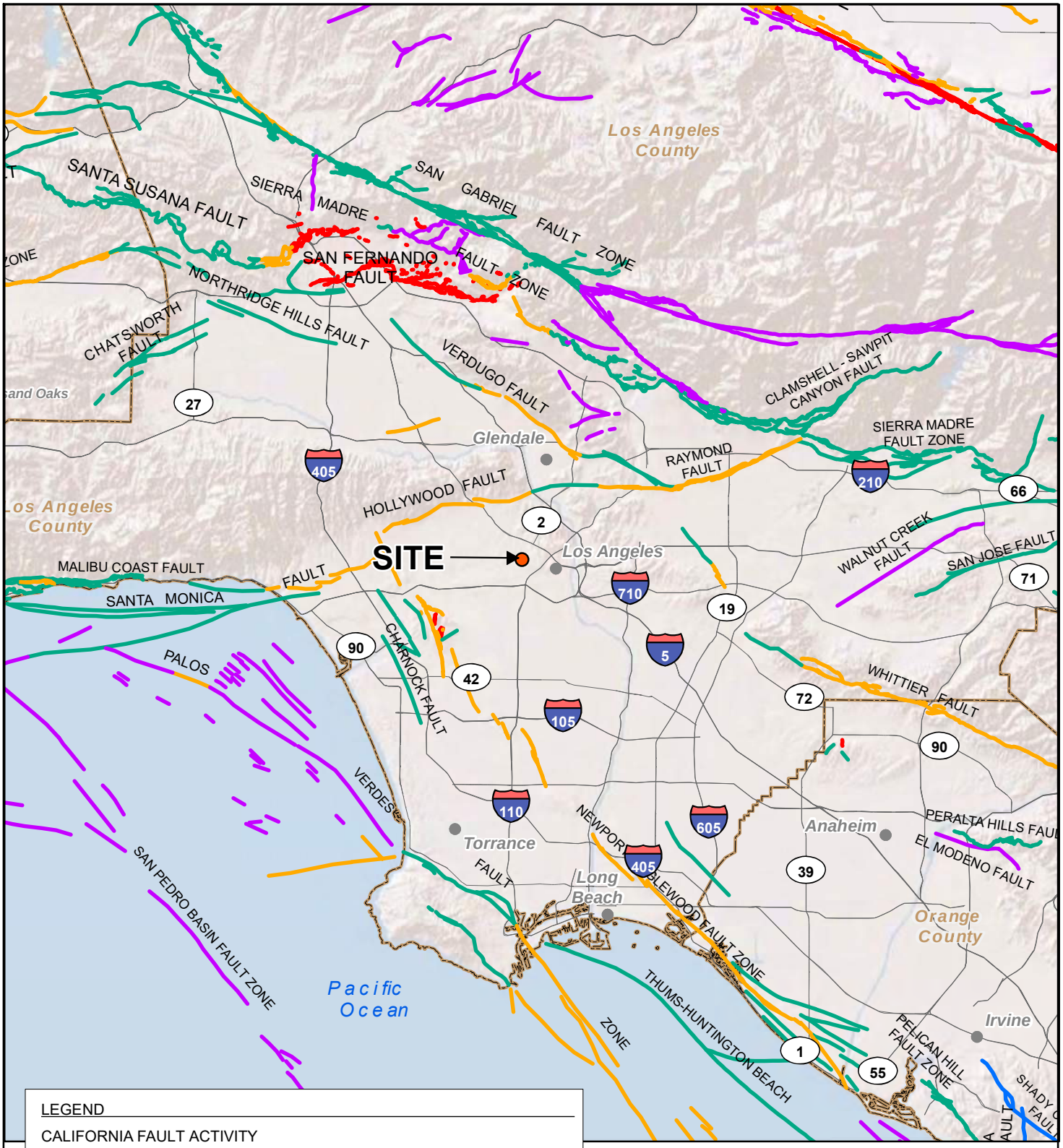

LEGEND

CALIFORNIA FAULT ACTIVITY

- HISTORICALLY ACTIVE
- HOLOCENE ACTIVE
- LATE QUATERNARY (POTENTIALLY ACTIVE)
- QUATERNARY (POTENTIALLY ACTIVE)
- QUATERNARY (INACTIVE)
- STATE/COUNTY BOUNDARY

SOURCES: CALIFORNIA DIVISION OF MINES AND GEOLOGY, 1976, ENVIRONMENTAL GEOLOGY OF ORANGE COUNTY, CALIFORNIA, OPEN FILE REPORT 79-8.; JENNINGS, C.W., AND BRYANT, 2010, FAULT ACTIVITY MAP OF CALIFORNIA; ESRI SHADED RELIEF, 2017

N

MILES 0 8 16

NOTE: DIRECTIONS, DIMENSIONS AND LOCATIONS ARE APPROXIMATE.

5_211019003_FL.mxd 06/09/20122 GK

FIGURE 5

FAULT LOCATIONS

MACARTHUR LAKE REHABILITATION PROJECT
LOS ANGELES, CALIFORNIA

211019003 | 7/22

Ninyo & Moore
Geotechnical & Environmental Sciences Consultants

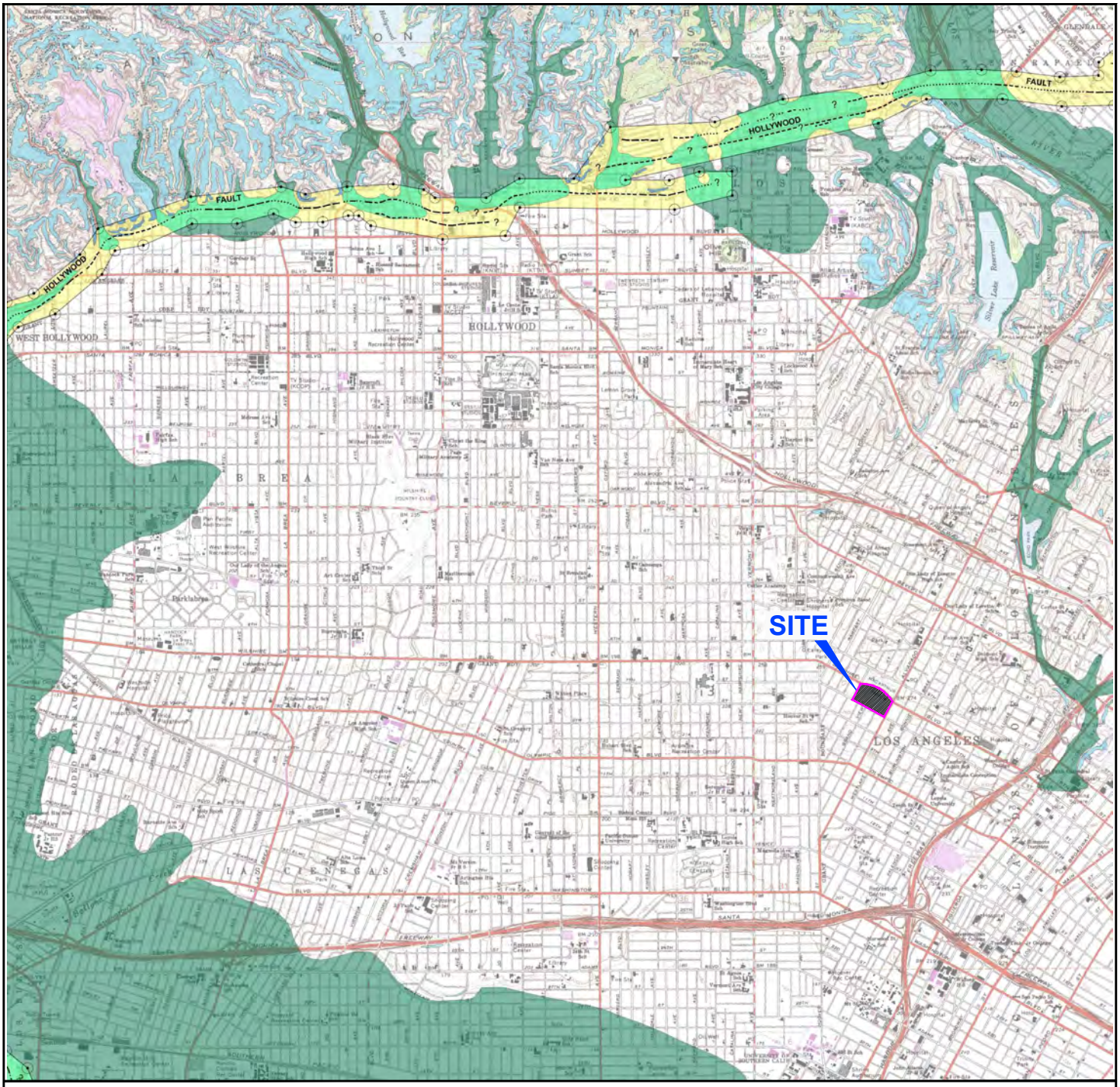

LEGEND

Earthquake Fault Zones
Zone boundaries are delineated by straight-line segments that connect encircled turning points; the boundaries define the zone encompassing active faults that constitute a potential hazard to structures from surface faulting or fault creep such that avoidance as described in Public Resources Code Section 2621.5(a) would be required.

Active Fault Traces
Faults considered to have been active during Holocene time and to have potential for surface rupture; solid line where accurately located; long dash where approximately located; short dash where inferred; dotted where concealed; query (?) indicates additional uncertainty. Evidence of historic offset indicated by year of earthquake-associated event or C for displacement caused by fault creep.

Earthquake-Induced Landslide Zones
Areas where previous occurrence of landslide movement, or local topographic, geological, geotechnical and subsurface water conditions indicate a potential for permanent ground displacements such that mitigation as defined in Public Resources Code Section 2693(c) would be required.

Liquefaction Zones
Areas where historical occurrence of liquefaction, or local geological, geotechnical and ground water conditions indicate a potential for permanent ground displacements such that mitigation as defined in Public Resources Code Section 2693(c) would be required.

Overlap of Earthquake Fault Zone and Liquefaction Zone
Areas that are covered by both Earthquake Fault Zone and Liquefaction Zone.

Overlap of Earthquake Fault Zone and Earthquake-Induced Landslide Zone
Areas that are covered by both Earthquake Fault Zone and Earthquake-Induced Landslide Zone.

N

FEET
0 5,000 10,000

NOTE: DIMENSIONS, DIRECTIONS AND LOCATIONS ARE APPROXIMATE. I REFERENCE: CGS, 2014.

6_211019003_SHZ.dwg 06/09/2022 (June 2022) GK

FIGURE 6

Ninyo & Moore
Geotechnical & Environmental Sciences Consultants

EARTHQUAKE FAULT AND SEISMIC HAZARD ZONES

MACARTHUR LAKE REHABILITATION PROJECT
LOS ANGELES, CALIFORNIA

211019003 I 7/22

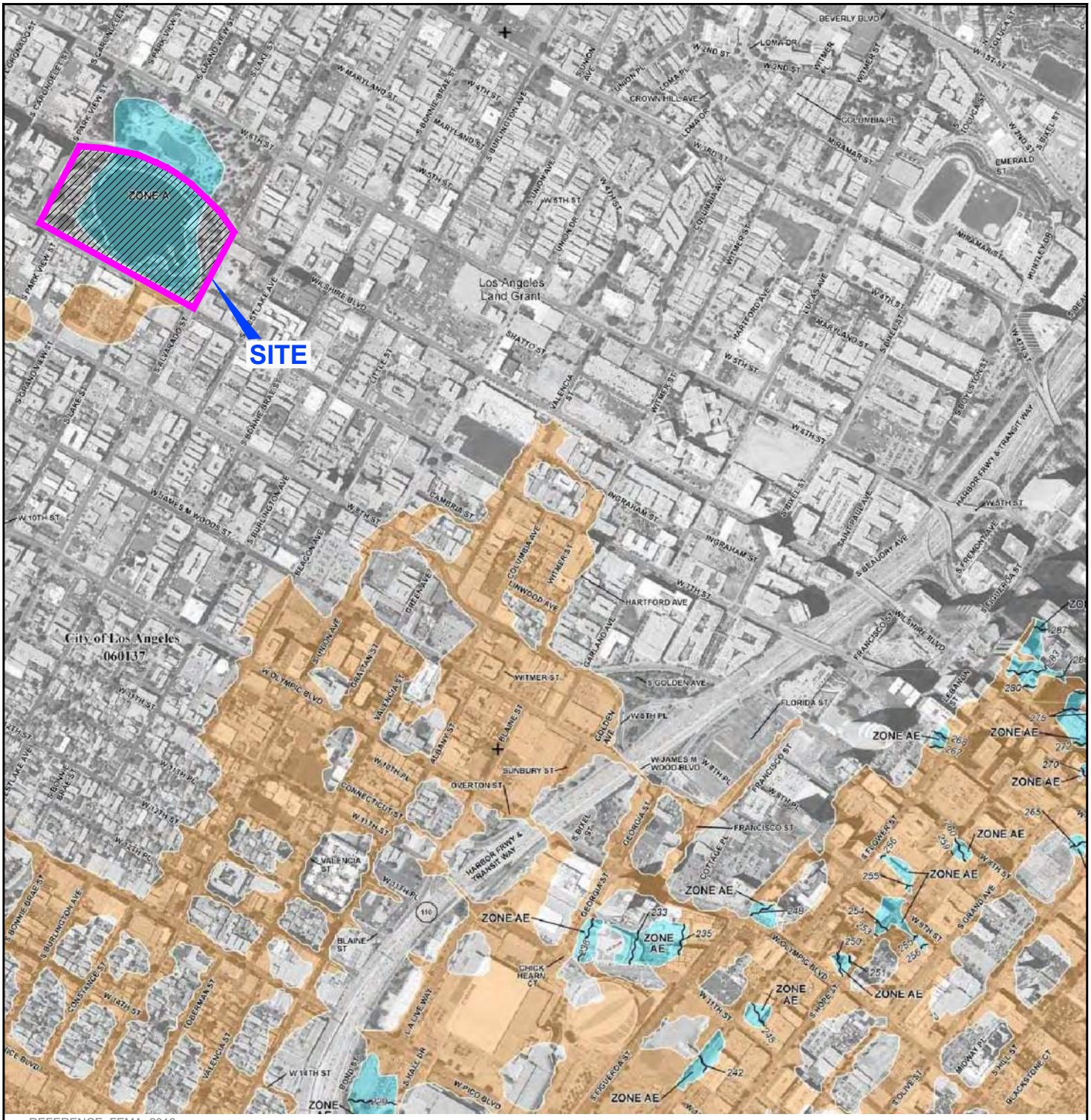

REFERENCE: FEMA, 2018.

LEGEND

ZONE A AND ZONE AE; 1% ANNUAL CHANCE FLOOD EVENT

ZONE X; 0.2 - 1% ANNUAL CHANCE FLOOD EVENT

238 BASE FLOOD ELEVATION LINE

NOTE: DIMENSIONS, DIRECTIONS AND LOCATIONS ARE APPROXIMATE.

N

FEET

0 1,000 2,000

7_211019002_FHZ.dwg 06/27/2022 (JUNE 2022) JDP, GK

FIGURE 7

Ninyo & Moore

Geotechnical & Environmental Sciences Consultants

FLOOD HAZARD ZONES

MACARTHUR LAKE REHABILITATION PROJECT
LOS ANGELES, CALIFORNIA

211019003 I 7/22

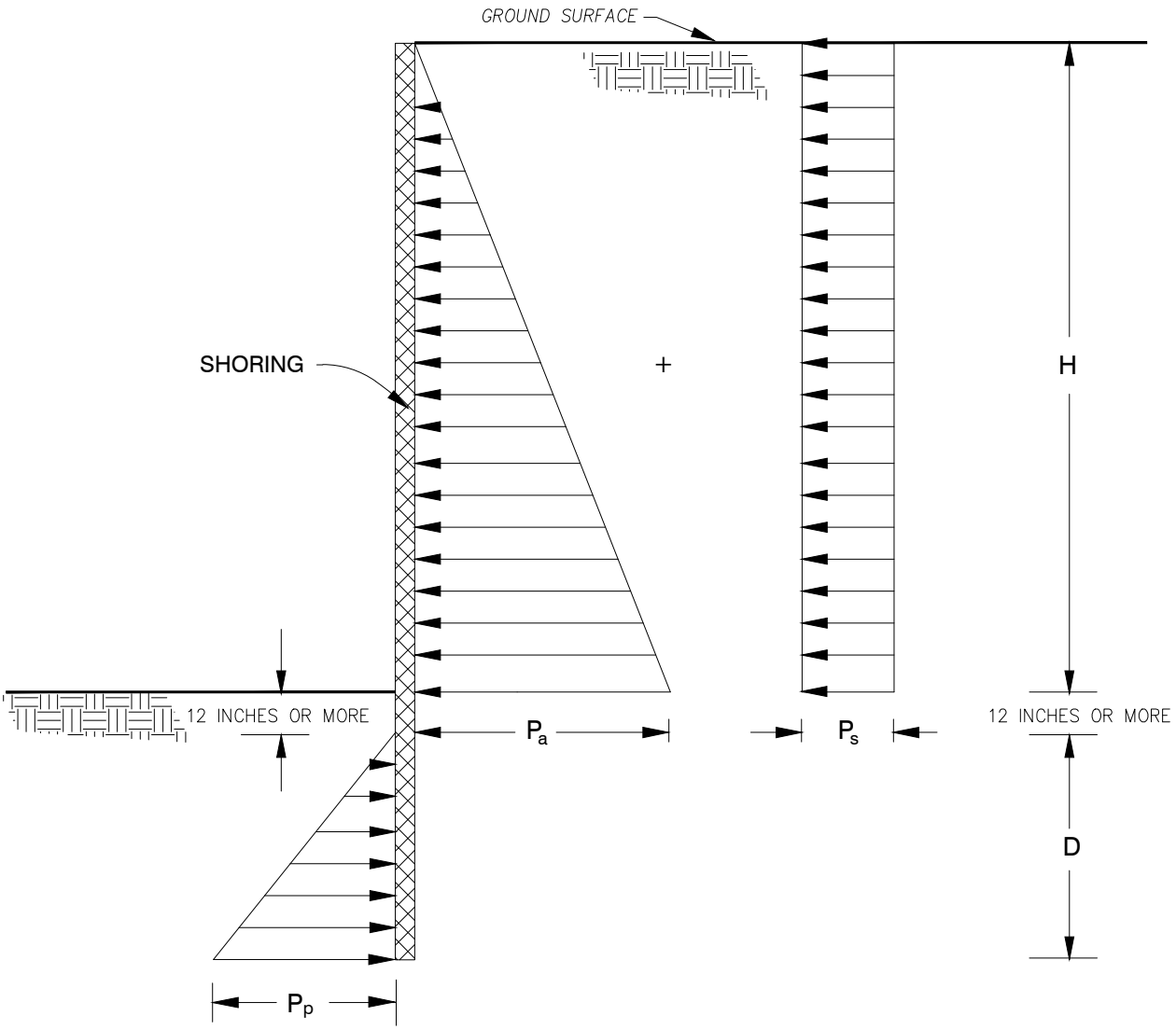

NOTES:

1. ACTIVE LATERAL EARTH PRESSURE, P_a
   P_a = 45 H psf
2. CONSTRUCTION TRAFFIC INDUCED SURCHARGE PRESSURE, P_s
   P_s = 120 psf
3. PASSIVE LATERAL EARTH PRESSURE, P_p
   P_p = 300 D psf
4. ASSUMES GROUNDWATER IS NOT PRESENT
5. H AND D ARE IN FEET

NOT TO SCALE

8_211019003_LEP-CS1.dwg 06/09/2022 (June 2022) GK

FIGURE 8

LATERAL EARTH PRESSURES FOR TEMPORARY CANTILEVERED SHORING
MACARTHUR LAKE REHABILITATION PROJECT
LOS ANGELES, CALIFORNIA

Ninyo & Moore
Geotechnical & Environmental Sciences Consultants

211019003 I 7/22

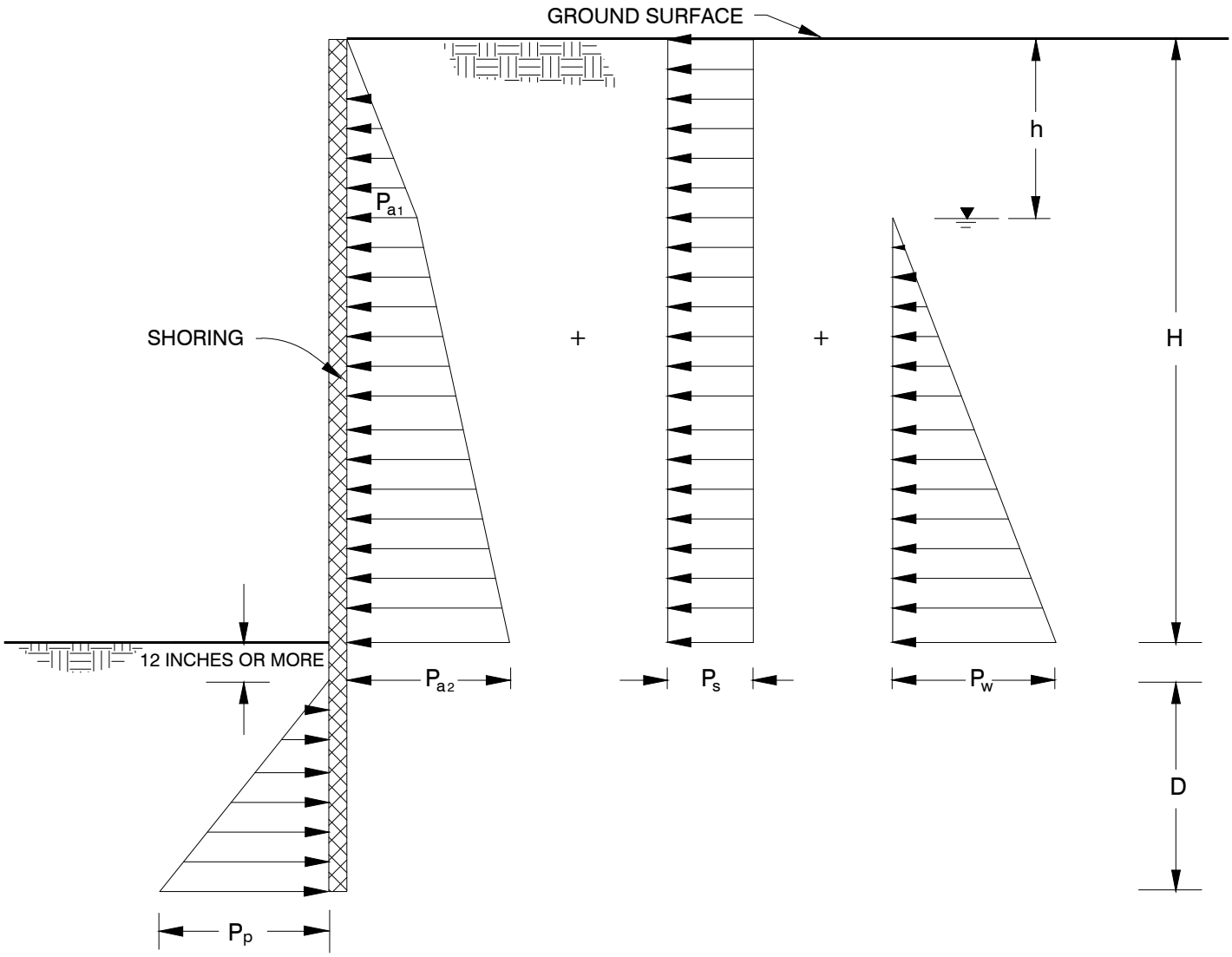

NOTES:

1. ACTIVE LATERAL EARTH PRESSURE, P_a
   $P_{a1} = 45\ h$ psf; $P_{a2} = P_{a1} + 22\ (H - h)$ psf
2. CONSTRUCTION TRAFFIC INDUCED SURCHARGE PRESSURE, P_s
   $P_s = 120$ psf
3. HYDROSTATIC PRESSURE, P_w
   $P_w = 62.4\ (H - h)$ psf
4. PASSIVE LATERAL EARTH PRESSURE, P_p
   $P_p = 150\ D$ psf
5. SURCHARGES FROM EXCAVATED SOIL OR CONSTRUCTION MATERIALS ARE NOT INCLUDED
6. H, h AND D ARE IN FEET
7. ▽ GROUNDWATER TABLE

NOT TO SCALE

9_211019003_LEP-CSBG.dwg 06/09/2022 (June 2022) GK

FIGURE 9

LATERAL EARTH PRESSURES FOR TEMPORARY CANTILEVERED SHORING BELOW GROUNDWATER

MACARTHUR LAKE REHABILITATION PROJECT
LOS ANGELES, CALIFORNIA

Ninyo & Moore
Geotechnical & Environmental Sciences Consultants

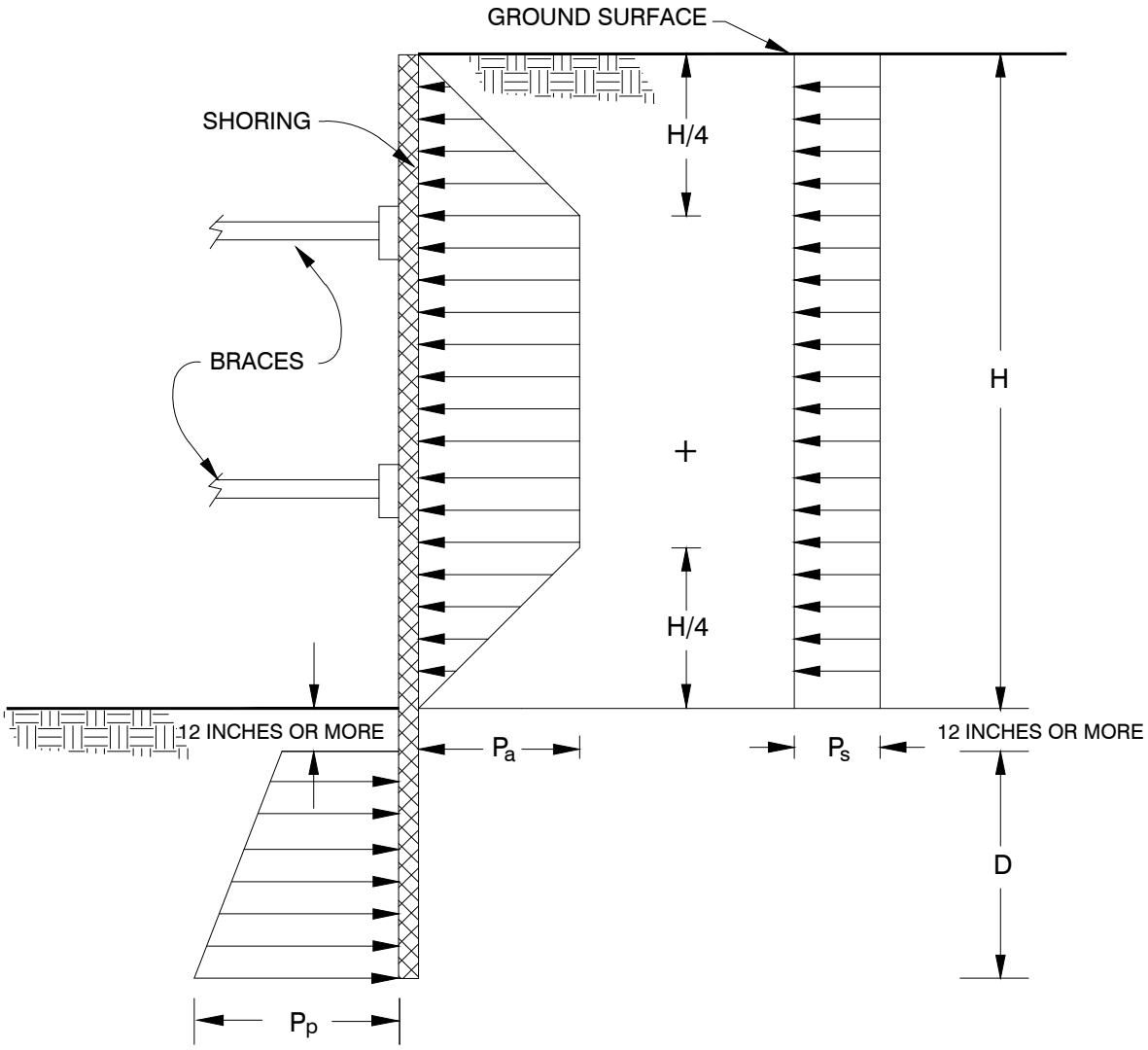

NOTES:

1. APPARENT LATERAL EARTH PRESSURE, P_a
   P_a = 48 H psf
2. CONSTRUCTION TRAFFIC INDUCED SURCHARGE PRESSURE, P_s
   P_s = 120 psf
3. PASSIVE LATERAL EARTH PRESSURE, P_p
   P_p = 120 D + 900 psf
4. ASSUMES GROUNDWATER IS NOT PRESENT
5. SURCHARGES FROM EXCAVATED SOIL OR CONSTRUCTION MATERIALS ARE NOT INCLUDED
6. H AND D ARE IN FEET

NOT TO SCALE

10_211019003_LEP-BE(SC).dwg 06/09/2022 (June 2022) GK

FIGURE 10

LATERAL EARTH PRESSURES FOR BRACED EXCAVATION (STIFF CLAY)
MACARTHUR LAKE REHABILITATION PROJECT
LOS ANGELES, CALIFORNIA

Ninyo & Moore
Geotechnical & Environmental Sciences Consultants

211019003 I 7/22

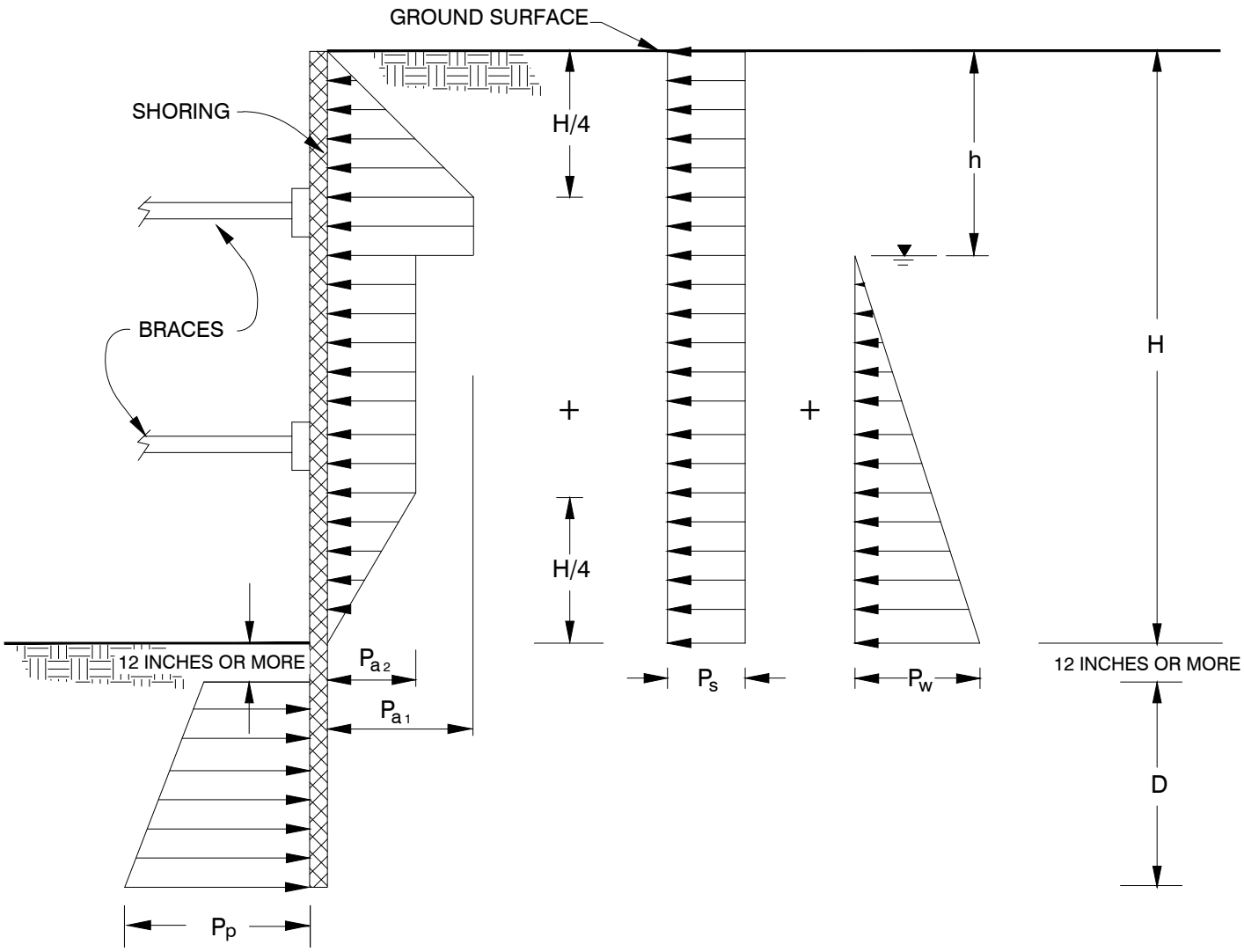

NOTES:

1. APPARENT LATERAL EARTH PRESSURE, P_a
   P_{a1} = 48 H psf; P_{a2} = 23 H psf
2. CONSTRUCTION TRAFFIC INDUCED SURCHARGE PRESSURE, P_s
   P_s = 120 psf
3. HYDROSTATIC PRESSURE, P_w
   P_w = 62.4 (H - h) psf
4. PASSIVE LATERAL EARTH PRESSURE, P_p
   P_p = 58 D + 900 psf
5. SURCHARGES FROM EXCAVATED SOIL OR CONSTRUCTION MATERIALS ARE NOT INCLUDED
6. H, h AND D ARE IN FEET
7. ▽ GROUNDWATER TABLE

NOT TO SCALE

11_211019003_LEP-BEBG(SC).dwg 06/09/2022 (June 2022) GK

FIGURE 11

LATERAL EARTH PRESSURES FOR BRACED EXCAVATION BELOW GROUNDWATER (STIFF CLAY)

MACARTHUR LAKE REHABILITATION PROJECT
LOS ANGELES, CALIFORNIA

Ninyo & Moore
Geotechnical & Environmental Sciences Consultants

211019003 I 7/22

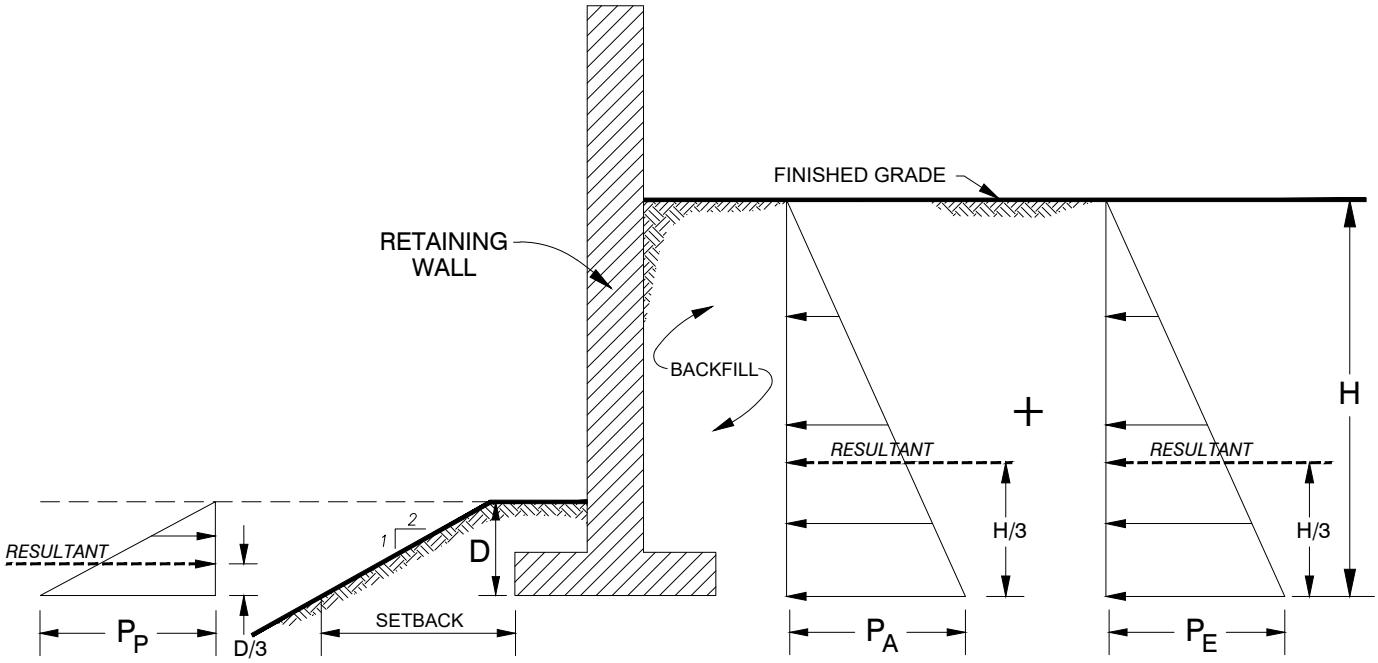

NOTES:

1. ASSUMES NO HYDROSTATIC PRESSURE BUILD-UP BEHIND THE RETAINING WALL
2. STRUCTURAL, GRANULAR BACKFILL MATERIALS AS SPECIFIED IN REPORT SHOULD BE USED FOR RETAINING WALL BACKFILL
3. DRAINS AS RECOMMENDED IN THE RETAINING WALL DRAINAGE DETAIL SHOULD BE INSTALLED BEHIND THE RETAINING WALL
4. DYNAMIC LATERAL EARTH PRESSURE IS BASED ON A DESIGN PEAK GROUND ACCELERATION OF 0.64g
5. P_E IS CALCULATED IN ACCORDANCE WITH THE RECOMMENDATIONS OF MONONOBE AND MATSUO (1929), AND ATIK AND SITAR (2010).
6. SURCHARGE PRESSURES CAUSED BY VEHICLES OR NEARBY STRUCTURES ARE NOT INCLUDED
7. H AND D ARE IN FEET
8. SETBACK SHOULD BE IN ACCORDANCE WITH FIGURE 1808.7.1 OF THE IBC (2015)

RECOMMENDED GEOTECHNICAL DESIGN PARAMETERS

Lateral Earth Pressure	Equivalent Fluid Pressure ($lb/ft^2/ft$)[1]	
P_A	Level Backfill with Granular Soils[2]	2H:1V Sloping Backfill with Granular Soils[2]
	37 H	57 H
P_E	29 H	25 H
P_P	Level Ground	2H:1V Descending Ground
	300 D	100 D

NOT TO SCALE

12_211019003_LEP-YRW2.dwg 06/09/2022 (June 2022) GK

FIGURE 12

LATERAL EARTH PRESSURES FOR YIELDING RETAINING WALLS

MACARTHUR LAKE REHABILITATION PROJECT
LOS ANGELES, CALIFORNIA

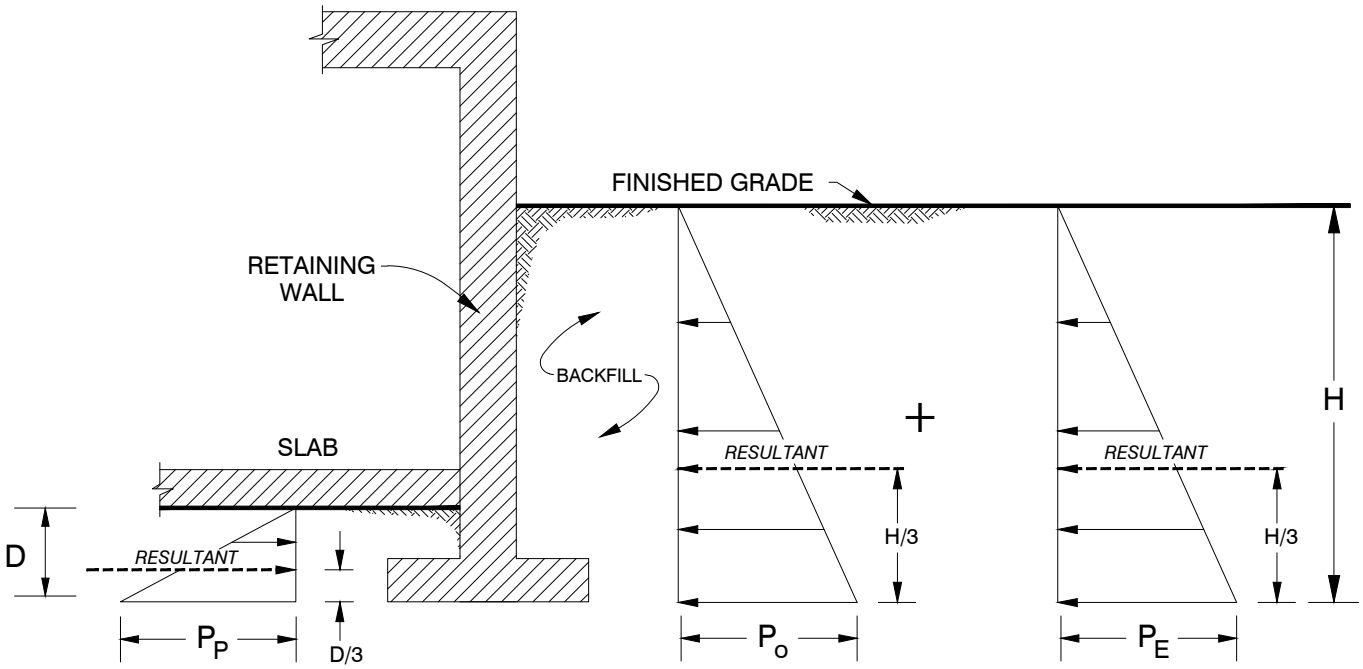

NOTES:

1. ASSUMES NO HYDROSTATIC PRESSURE BUILD-UP BEHIND THE RETAINING WALL
2. STRUCTURAL, GRANULAR BACKFILL MATERIALS AS SPECIFIED IN REPORT SHOULD BE USED FOR RETAINING WALL BACKFILL
3. DRAINS AS RECOMMENDED IN THE RETAINING WALL DRAINAGE DETAIL SHOULD BE INSTALLED BEHIND THE RETAINING WALL
4. DYNAMIC LATERAL EARTH PRESSURE IS BASE ON A DESIGN PEAK GROUND ACCELERATION OF 0.64g
5. P_E IS CALCULATED IN ACCORDANCE WITH THE RECOMMENDATIONS OF MONONOBE AND MATSUO (1929), AND ATIK AND SITAR (2010).
6. SURCHARGE PRESSURES CAUSED BY VEHICLES OR NEARBY STRUCTURES ARE NOT INCLUDED
7. H AND D ARE IN FEET

RECOMMENDED GEOTECHNICAL DESIGN PARAMETERS

Lateral Earth Pressure	Equivalent Fluid Pressure ($lb/ft^2/ft$)[1]	
P_O	Level Backfill with Granular Soils[2]	2H:1V Sloping Backfill with Granular Soils [2]
	56 H	82 H
P_E	29 H	25 H
P_P	Level Ground	2H:1V Descending Ground
	300 D	100 D

NOT TO SCALE

13_211019003_LEP-YRW4.dwg 06/09/2022 (June 2022) GK

FIGURE 13

LATERAL EARTH PRESSURES FOR RESTRAINED RETAINING WALLS

MACARTHUR LAKE REHABILITATION PROJECT
LOS ANGELES, CALIFORNIA

Ninyo & Moore
Geotechnical & Environmental Sciences Consultants

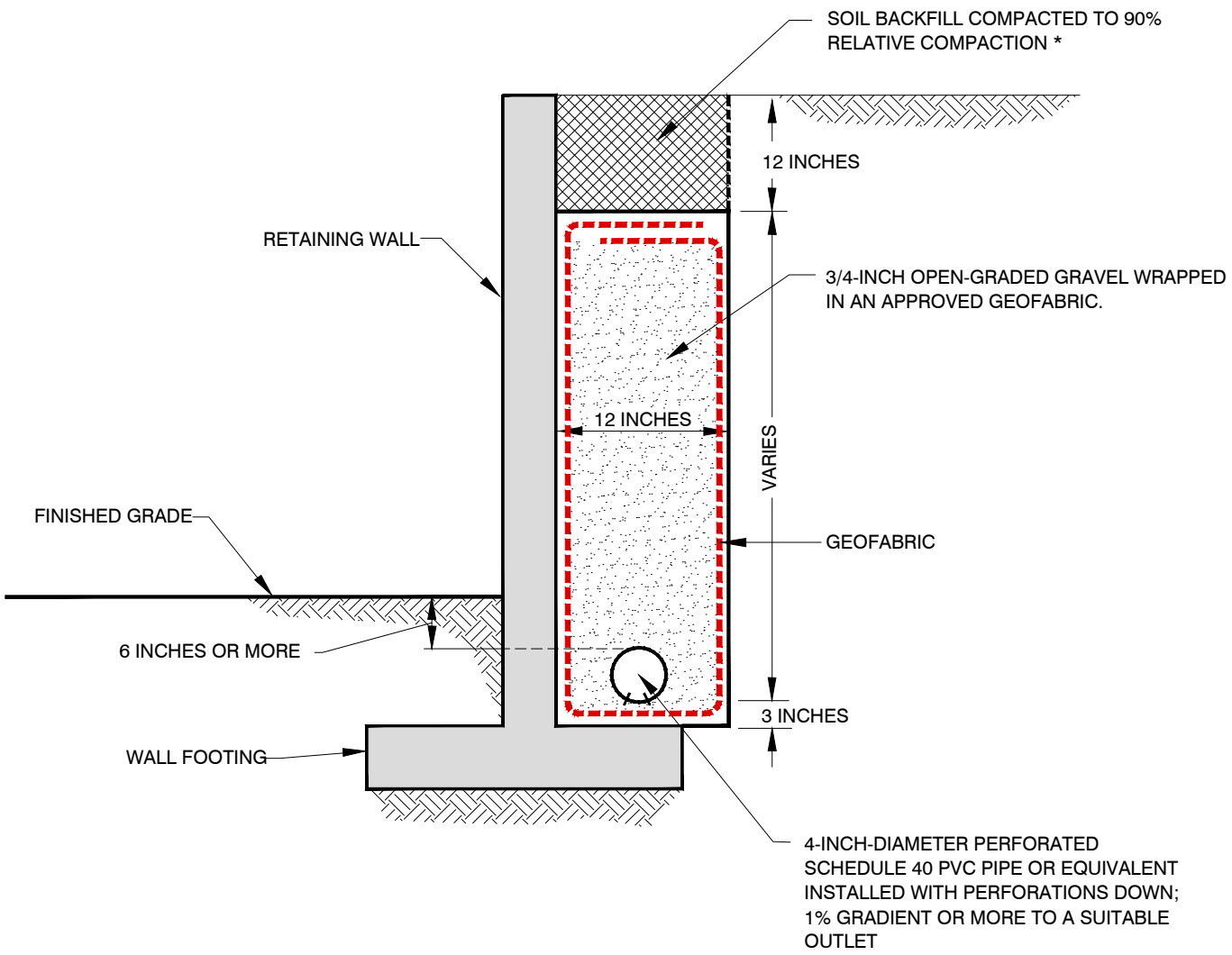

*BASED ON ASTM D1557

NOT TO SCALE

14_211019003_RWDD2.dwg 06/09/2022 (June 2022) GK

FIGURE 14

RETAINING WALL DRAINAGE DETAIL

MACARTHUR LAKE REHABILITATION PROJECT
LOS ANGELES, CALIFORNIA

211019003 I 7/22

Ninyo & Moore
Geotechnical & Environmental Sciences Consultants

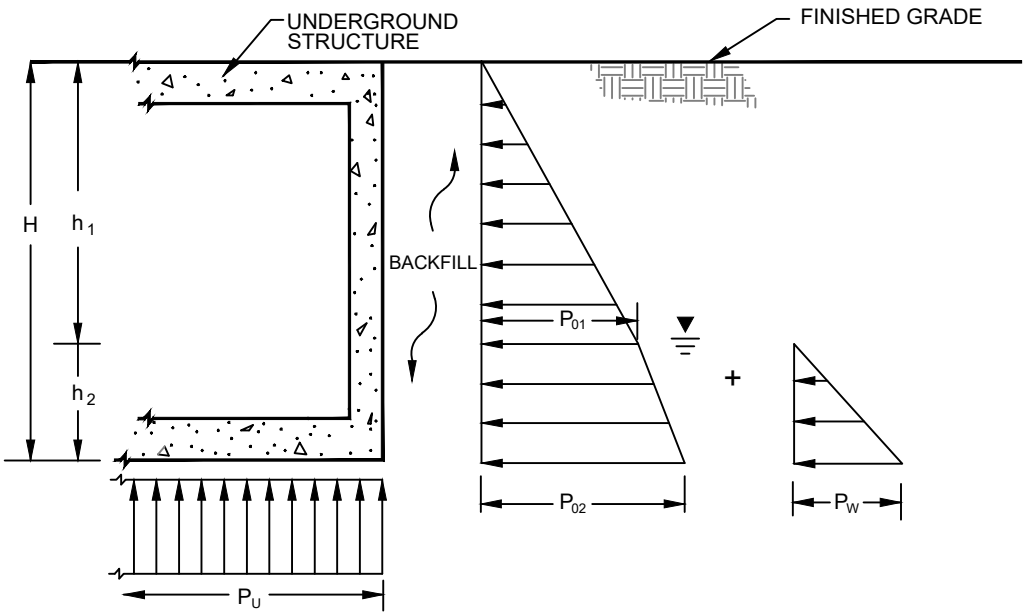

NOTES:

1. APPARENT LATERAL EARTH PRESSURES, P_{01} AND P_{02}
   $P_{01} = 66h_1$ psf
   $P_{02} = 66h_1 + 32h_2$ psf
2. HYDROSTATIC PRESSURE, P_w
   $P_w = 62.4h_2$ psf
3. UPLIFT PRESSURE, P_u
   $P_u = 62.4h_2$ psf
4. SURCHARGE PRESSURES CAUSED BY VEHICLES OR NEARBY STRUCTURES ARE NOT INCLUDED
5. H, h_1 AND h_2 ARE IN FEET
6. ▼ GROUNDWATER TABLE

NOT TO SCALE

FIGURE 15

LATERAL EARTH PRESSURES FOR UNDERGROUND STRUCTURES

MACARTHUR LAKE REHABILITATION PROJECT
LOS ANGELES, CALIFORNIA

211019003 I 7/22

Ninyo & Moore
Geotechnical & Environmental Sciences Consultants

15_211019003_LEP-US.dwg 07/01/2022 (JUNE 2022) GK

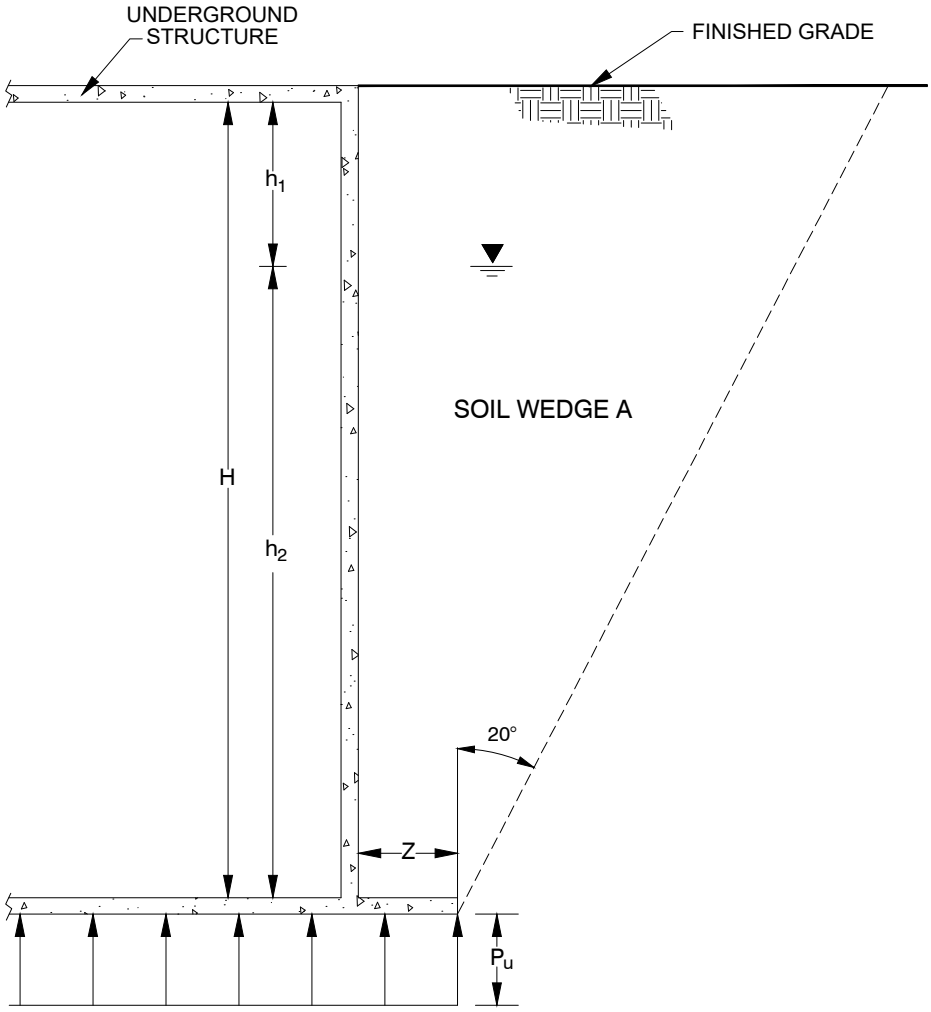

RESISTANCE TO UPLIFT = WEIGHT OF STRUCTURE + WEIGHT OF SOIL WEDGE A

NOTES:

1. UNIT WEIGHT OF SOILS, γ OR γ_b
   γ = 120 pcf ABOVE GROUNDWATER TABLE
   γ_b = 58 pcf BELOW GROUNDWATER TABLE
2. UPLIFT PRESSURE, P_u
   $P_u = 62.4\ h_2$ psf
3. H, Z, h_1 AND h_2 ARE IN FEET
4. ▼ GROUNDWATER TABLE

NOT TO SCALE

16_211019003_UR.dwg 06/09/2022 (June 2022) GK

FIGURE 16

UPLIFT RESISTANCE DIAGRAM FOR UNDERGROUND STRUCTURES
MACARTHUR LAKE REHABILITATION PROJECT
LOS ANGELES, CALIFORNIA

APPENDIX A

Boring Logs

APPENDIX A

BORING LOGS

Field Procedure for the Collection of Disturbed Samples

Disturbed soil samples were obtained in the field using the following methods.

Bulk Samples

Bulk samples of representative earth materials were obtained from the exploratory borings. The samples were bagged and transported to the laboratory for testing.

The Standard Penetration Test (SPT) Sampler

Disturbed drive samples of earth materials were obtained by means of a Standard Penetration Test sampler. The sampler is composed of a split barrel with an external diameter of 2 inches and an unlined internal diameter of 1-3/8 inches. The sampler was driven into the ground 12 to 18 inches with a 140-pound hammer falling freely from a height of 30 inches in general accordance with ASTM D 1586. The blow counts were recorded for every 6 inches of penetration; the blow counts reported on the logs are those for the last 12 inches of penetration. Soil samples were observed and removed from the sampler, bagged, sealed and transported to the laboratory for testing.

Field Procedure for the Collection of Relatively Undisturbed Samples

Relatively undisturbed soil samples were obtained in the field using the following method.

The Modified Split-Barrel Drive Sampler

The sampler, with an external diameter of 3.0 inches, was lined with 1-inch long, thin brass rings with inside diameters of approximately 2.4 inches. The sampler barrel was driven into the ground with the weight of a hammer in general accordance with ASTM D 3550. The driving weight was permitted to fall freely. The approximate length of the fall, the weight of the hammer, and the number of blows per foot of driving are presented on the boring logs as an index to the relative resistance of the materials sampled. The samples were removed from the sampler barrel in the brass rings, sealed, and transported to the laboratory for testing.

BORING LOG EXPLANATION SHEET

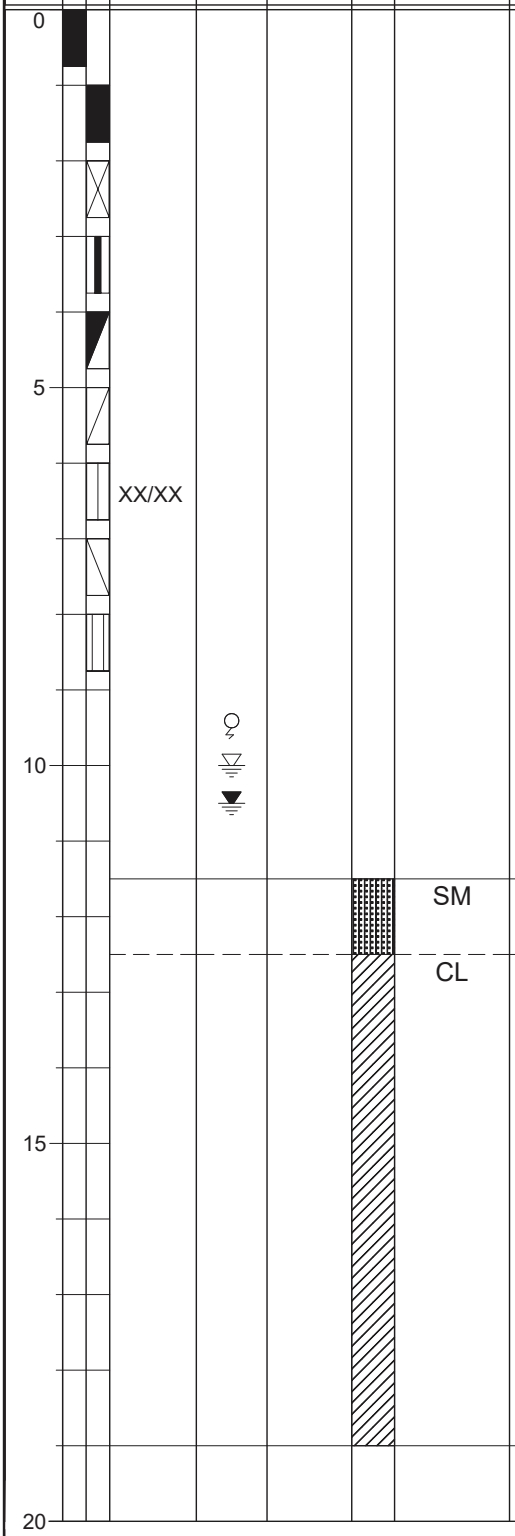

Bulk sample.

Modified split-barrel drive sampler.

No recovery with modified split-barrel drive sampler.

Sample retained by others.

Standard Penetration Test (SPT).

No recovery with a SPT.

Shelby tube sample. Distance pushed in inches/length of sample recovered in inches.

No recovery with Shelby tube sampler.

Continuous Push Sample.

Seepage.

Groundwater encountered during drilling.

Groundwater measured after drilling.

SM

MAJOR MATERIAL TYPE (SOIL):

Solid line denotes unit change.

CL

Dashed line denotes material change.

Attitudes: Strike/Dip
b: Bedding
c: Contact
j: Joint
f: Fracture
F: Fault
cs: Clay Seam
s: Shear
bss: Basal Slide Surface
sf: Shear Fracture
sz: Shear Zone
sbs: Shear Bedding Surface

The total depth line is a solid line that is drawn at the bottom of the boring.

Soil Classification Chart Per ASTM D 2488

Primary Divisions			Secondary Divisions	
			Group Symbol	Group Name
COARSE-GRAINED SOILS more than 50% retained on No. 200 sieve	**GRAVEL** more than 50% of coarse fraction retained on No. 4 sieve	CLEAN GRAVEL less than 5% fines	GW	well-graded GRAVEL
			GP	poorly graded GRAVEL
		GRAVEL with DUAL CLASSIFICATIONS 5% to 12% fines	GW-GM	well-graded GRAVEL with silt
			GP-GM	poorly graded GRAVEL with silt
			GW-GC	well-graded GRAVEL with clay
			GP-GC	poorly graded GRAVEL with clay
		GRAVEL with FINES more than 12% fines	GM	silty GRAVEL
			GC	clayey GRAVEL
			GC-GM	silty, clayey GRAVEL
	SAND 50% or more of coarse fraction passes No. 4 sieve	CLEAN SAND less than 5% fines	SW	well-graded SAND
			SP	poorly graded SAND
		SAND with DUAL CLASSIFICATIONS 5% to 12% fines	SW-SM	well-graded SAND with silt
			SP-SM	poorly graded SAND with silt
			SW-SC	well-graded SAND with clay
			SP-SC	poorly graded SAND with clay
		SAND with FINES more than 12% fines	SM	silty SAND
			SC	clayey SAND
			SC-SM	silty, clayey SAND
FINE-GRAINED SOILS 50% or more passes No. 200 sieve	**SILT and CLAY** liquid limit less than 50%	INORGANIC	CL	lean CLAY
			ML	SILT
			CL-ML	silty CLAY
		ORGANIC	OL (PI > 4)	organic CLAY
			OL (PI < 4)	organic SILT
	SILT and CLAY liquid limit 50% or more	INORGANIC	CH	fat CLAY
			MH	elastic SILT
		ORGANIC	OH (plots on or above "A"-line)	organic CLAY
			OH (plots below "A"-line)	organic SILT
	Highly Organic Soils		PT	Peat

Grain Size

Description		Sieve Size	Grain Size	Approximate Size
Boulders		> 12"	> 12"	Larger than basketball-sized
Cobbles		3 - 12"	3 - 12"	Fist-sized to basketball-sized
Gravel	Coarse	3/4 - 3"	3/4 - 3"	Thumb-sized to fist-sized
	Fine	#4 - 3/4"	0.19 - 0.75"	Pea-sized to thumb-sized
Sand	Coarse	#10 - #4	0.079 - 0.19"	Rock-salt-sized to pea-sized
	Medium	#40 - #10	0.017 - 0.079"	Sugar-sized to rock-salt-sized
	Fine	#200 - #40	0.0029 - 0.017"	Flour-sized to sugar-sized
Fines		Passing #200	< 0.0029"	Flour-sized and smaller

Plasticity Chart

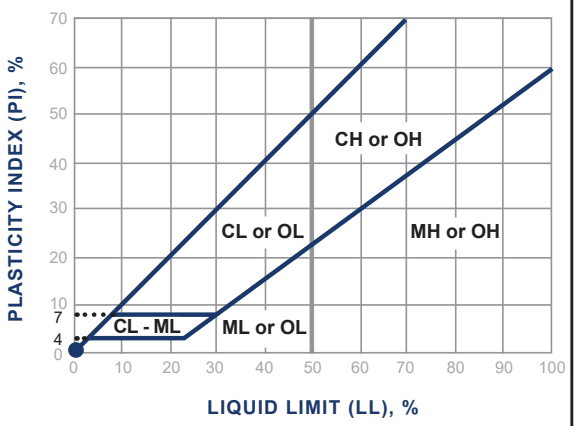

Apparent Density - Coarse-Grained Soil

Apparent Density	Spooling Cable or Cathead		Automatic Trip Hammer	
	SPT (blows/foot)	Modified Split Barrel (blows/foot)	SPT (blows/foot)	Modified Split Barrel (blows/foot)
Very Loose	≤ 4	≤ 8	≤ 3	≤ 5
Loose	5 - 10	9 - 21	4 - 7	6 - 14
Medium Dense	11 - 30	22 - 63	8 - 20	15 - 42
Dense	31 - 50	64 - 105	21 - 33	43 - 70
Very Dense	> 50	> 105	> 33	> 70

Consistency - Fine-Grained Soil

Consis-tency	Spooling Cable or Cathead		Automatic Trip Hammer	
	SPT (blows/foot)	Modified Split Barrel (blows/foot)	SPT (blows/foot)	Modified Split Barrel (blows/foot)
Very Soft	< 2	< 3	< 1	< 2
Soft	2 - 4	3 - 5	1 - 3	2 - 3
Firm	5 - 8	6 - 10	4 - 5	4 - 6
Stiff	9 - 15	11 - 20	6 - 10	7 - 13
Very Stiff	16 - 30	21 - 39	11 - 20	14 - 26
Hard	> 30	> 39	> 20	> 26

Ninyo & Moore
Geotechnical & Environmental Sciences Consultants

USCS METHOD OF SOIL CLASSIFICATION

DATE DRILLED 4/8/22 BORING NO. B-1

GROUND ELEVATION 271' ± (MSL) SHEET 1 OF 1

METHOD OF DRILLING 8" Hollow-Stem Auger (Martini Drilling)

DRIVE WEIGHT 140 lbs (Auto. Trip Hammer) DROP 30"

SAMPLED BY AES/PNV LOGGED BY AES/PNV REVIEWED BY MLP

DEPTH (feet)	SAMPLES (Bulk / Driven)	BLOWS/FOOT	MOISTURE (%)	DRY DENSITY (PCF)	SYMBOL	CLASSIFICATION U.S.C.S.	DESCRIPTION/INTERPRETATION
0						SM	FILL: Brown, moist, medium dense, silty SAND; trace rootlets.
						CL	ALLUVIUM: Light yellowish brown, moist, very stiff, lean CLAY; trace gravel-size siltstone fragments.
						SM	Yellow to reddish yellow, moist, loose, silty SAND; trace fine gravel.
		14	9.4	93.0		CL	Brown, moist, very stiff, sandy lean CLAY.
10		15					PUENTE FORMATION: Gray and yellowish brown, moist, weakly indurated, moderately soft, clayey SILTSTONE; iron oxidation staining. Very thin interbeds of dark brown claystone.
		11					Increase in moisture; laminated.
20							Total Depth = 16.5 feet. Groundwater was not encountered during drilling. Backfilled with cement-bentonite grout on 4/8/21. Notes: Groundwater, though not encountered at the time of drilling, may rise to a higher level due to seasonal variations in precipitation and several other factors as discussed in the report. The ground elevation shown above is an estimation only. It is based on our interpretations of published maps and other documents reviewed for the purposes of this evaluation. It is not sufficiently accurate for preparing construction bids and design documents.
30							
40							

FIGURE A- 1

Ninyo & Moore
Geotechnical & Environmental Sciences Consultants

MACARTHUR LAKE REHABILITATION PROJECT
LOS ANGELES, CALIFORNIA

DATE DRILLED 4/8/22 BORING NO. B-2

GROUND ELEVATION 270' ± (MSL) SHEET 1 OF 1

METHOD OF DRILLING 8" Hollow-Stem Auger (Martini Drilling)

DRIVE WEIGHT 140 lbs (Auto. Trip Hammer) DROP 30"

SAMPLED BY AES/PNV LOGGED BY AES/PNV REVIEWED BY MLP

DEPTH (feet)	SAMPLES (Bulk / Driven)	BLOWS/FOOT	MOISTURE (%)	DRY DENSITY (PCF)	SYMBOL	CLASSIFICATION U.S.C.S.	DESCRIPTION/INTERPRETATION
0						SC	FILL: Brown, moist, loose to medium dense, clayey SAND.
							PUENTE FORMATION: Light yellowish brown, moist, weakly indurated, soft, clayey SILTSTONE; oxidation staining.
		70	26.4	97.1			Light brown and reddish yellow.
10		75	25.1	99.1			Moderately soft.
		20					Dark grayish brown; very thinly bedded; interbedded with light gray sand.
20		23					Moderately indurated; continues very thinly bedded.
		50/2"					Gray; hard; sampler refusal.
							Total Depth = 25.2 feet. Groundwater was not encountered during drilling. Backfilled with cement-bentonite grout on 4/8/21.
30							Notes: Groundwater, though not encountered at the time of drilling, may rise to a higher level due to seasonal variations in precipitation and several other factors as discussed in the report. The ground elevation shown above is an estimation only. It is based on our interpretations of published maps and other documents reviewed for the purposes of this evaluation. It is not sufficiently accurate for preparing construction bids and design documents.
40							

DATE DRILLED 4/8/22 BORING NO. B-3

GROUND ELEVATION 263' ± (MSL) SHEET 1 OF 1

METHOD OF DRILLING 8" Hollow-Stem Auger (Martini Drilling)

DRIVE WEIGHT 140 lbs (Auto. Trip Hammer) DROP 30"

SAMPLED BY AES/PNV LOGGED BY AES/PNV REVIEWED BY MLP

DEPTH (feet)	SAMPLES (Bulk / Driven)	BLOWS/FOOT	MOISTURE (%)	DRY DENSITY (PCF)	SYMBOL	CLASSIFICATION U.S.C.S.	DESCRIPTION/INTERPRETATION
0						SC	FILL: Brown, moist, loose to medium dense, clayey SAND; trace gravel and concrete debris.
		14	31.5	89.9		CL	ALLUVIUM: Yellow to very light brown, moist, very stiff, lean CLAY; interbedded with sand.
10		19	38.2	82.0			PUENTE FORMATION: Light brown and gray, moist, weakly indurated, very soft, clayey SILTSTONE; few interbeds of light gray sand; trace roots; oxidation staining. Very thinly bedded.
		14	45.1	75.0			
20		11					Dark grayish brown; continues clayey siltstone with interbedded sands.
		27					Weak to moderate hydrogen sulfide odor.
30		39					
							Total Depth = 31.5 feet. Groundwater was not encountered during drilling. Backfilled with cement-bentonite grout on 4/8/21. Notes: Groundwater, though not encountered at the time of drilling, may rise to a higher level due to seasonal variations in precipitation and several other factors as discussed in the report. The ground elevation shown above is an estimation only. It is based on our interpretations of published maps and other documents reviewed for the purposes of this evaluation. It is not sufficiently accurate for preparing construction bids and design documents.
40							

APPENDIX B

Laboratory Test Results

APPENDIX B

LABORATORY TESTING

Classification
Soils were visually and texturally classified in accordance with the Unified Soil Classification System (USCS) in general accordance with ASTM D 2488. Soil classifications are indicated on the logs of the exploratory borings in Appendix A.

In-Place Moisture and Density Tests
The moisture content and dry density of relatively undisturbed samples obtained from the exploratory borings were evaluated in general accordance with ASTM D 2937. The test results are presented on the logs of the exploratory borings in Appendix A.

Gradation Analysis
Gradation analysis test was performed on a selected representative soil sample in general accordance with ASTM D 422. The grain-size distribution curve is shown on Figures B-1. The test results were utilized in evaluating the soil classifications in accordance with the USCS.

200 Wash
An evaluation of the percentage of particles finer than the No. 200 sieve in a selected soil sample was performed in general accordance with ASTM D 1140. The results of the tests are presented on Figure B-2.

Atterberg Limits
A test was performed on a selected representative fine-grained soil sample to evaluate the liquid limit, plastic limit, and plasticity index in general accordance with ASTM D 4318. The test results were utilized to evaluate the soil classification in accordance with the USCS. The test results and classification are shown on Figure B-3.

Consolidation Tests
A consolidation test was performed on a selected relatively undisturbed soil sample in general accordance with ASTM D 2435. The sample was inundated during testing to represent adverse field conditions. The percent of consolidation for each load cycle was recorded as a ratio of the amount of vertical compression to the original height of the sample. The results of the test are summarized on Figures B-4.

Direct Shear Tests
Direct shear tests were performed on relatively undisturbed samples in general accordance with ASTM D 3080 to evaluate the shear strength characteristics of selected materials. The samples were inundated during shearing to represent adverse field conditions. The results are shown on Figures B-5 and B-6.

Expansion Index Tests
The expansion index of a selected materials was evaluated in general accordance with Uniform Building Code (UBC) Standard No. 18-2 (ASTM D 4829). The specimen was molded under a specified compactive energy at approximately 50 percent saturation (plus or minus 1 percent). The prepared 1-inch thick by 4-inch diameter specimen was loaded with a surcharge of 144 pounds per square foot and was inundated with tap water. Readings of volumetric swell were made for a period of 24 hours. The results of this test are presented on Figure B-7.

Soil Corrosivity Tests

Soil pH and resistivity tests were performed on representative samples in general accordance with California Test (CT) 643. The soluble sulfate and chloride content of the selected samples were evaluated in general accordance with CT 417 and CT 422, respectively. The test results are presented on Figure B-8.

GRAVEL		SAND			FINES	
Coarse	Fine	Coarse	Medium	Fine	SILT	CLAY

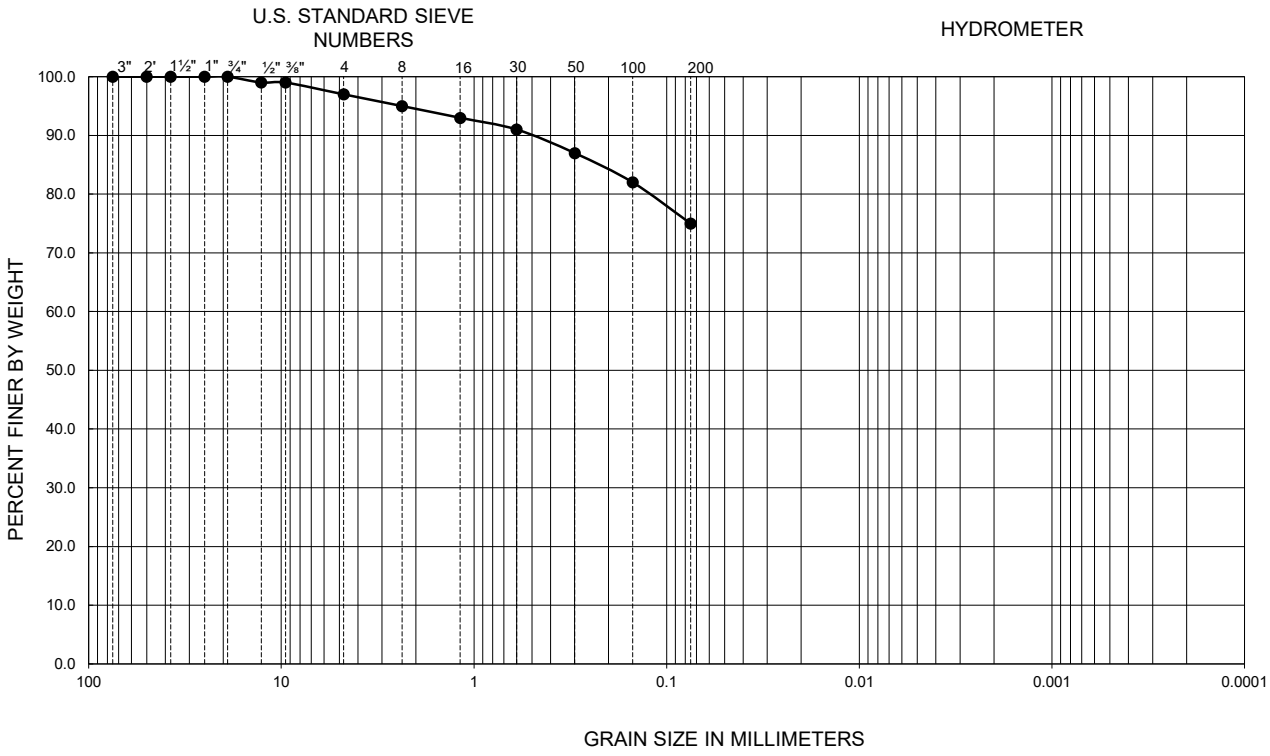

Symbol	Sample Location	Depth (ft)	Liquid Limit	Plastic Limit	Plasticity Index	D_{10}	D_{30}	D_{60}	C_u	C_c	Passing No. 200 (percent)	USCS or Equivalent
●	B-2	2.0-5.0	--	--	--	--	--	--	--	--	75	ML

PERFORMED IN GENERAL ACCORDANCE WITH ASTM D 6913

FIGURE B-1

GRADATION TEST RESULTS

MACARTHUR LAKE REHABILITATION PROJECT
LOS ANGELES, CALIFORNIA

Ninyo & Moore
Geotechnical & Environmental Sciences Consultants

211019003 Fig B-1_SIEVE w No 8 @ B-2 3.0-5.0

SAMPLE LOCATION	SAMPLE DEPTH (ft)	DESCRIPTION	PERCENT PASSING NO. 4	PERCENT PASSING NO. 200	USCS OR EQUIVALENT (TOTAL SAMPLE)
B-1	10.0-11.5	Clayey SILSTONE	97	64	ML

PERFORMED IN GENERAL ACCORDANCE WITH ASTM D 1140

FIGURE B-2

NO. 200 SIEVE ANALYSIS TEST RESULTS

MACARTHUR LAKE REHABILITATION PROJECT
LOS ANGELES, CALIFORNIA

211019003 | 7/22

Ninyo & Moore
Geotechnical & Environmental Sciences Consultants

SYMBOL	LOCATION	DEPTH (ft)	LIQUID LIMIT	PLASTIC LIMIT	PLASTICITY INDEX	USCS CLASSIFICATION (Fraction Finer Than No. 40 Sieve)	USCS
●	B-3	3.0-5.0	37	16	21	CL	CL

NP - INDICATES NON-PLASTIC

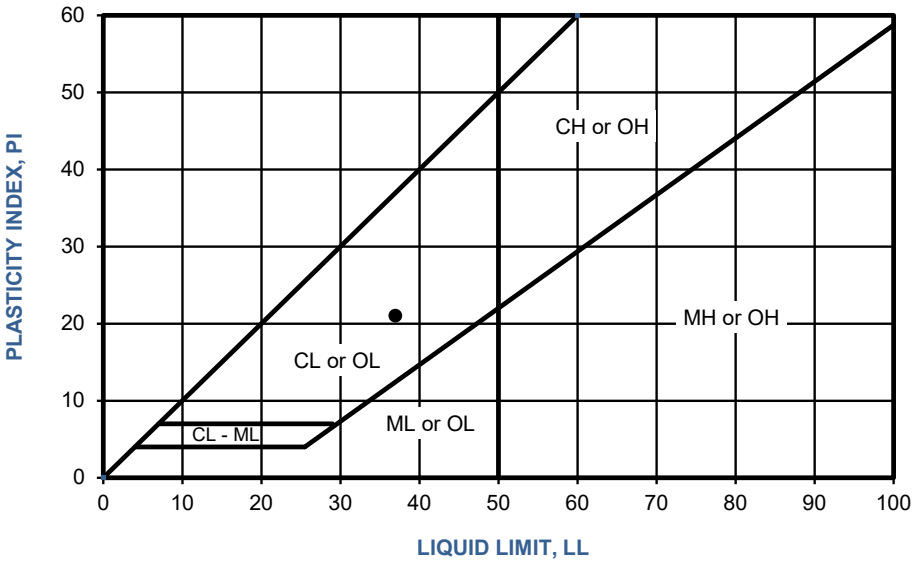

PERFORMED IN GENERAL ACCORDANCE WITH ASTM D 4318

FIGURE B-3

ATTERBERG LIMITS TEST RESULTS

MACARTHUR LAKE REHABILITATION PROJECT
LOS ANGELES, CALIFORNIA

211019003 | 7/22

Ninyo & Moore
Geotechnical & Environmental Sciences Consultants

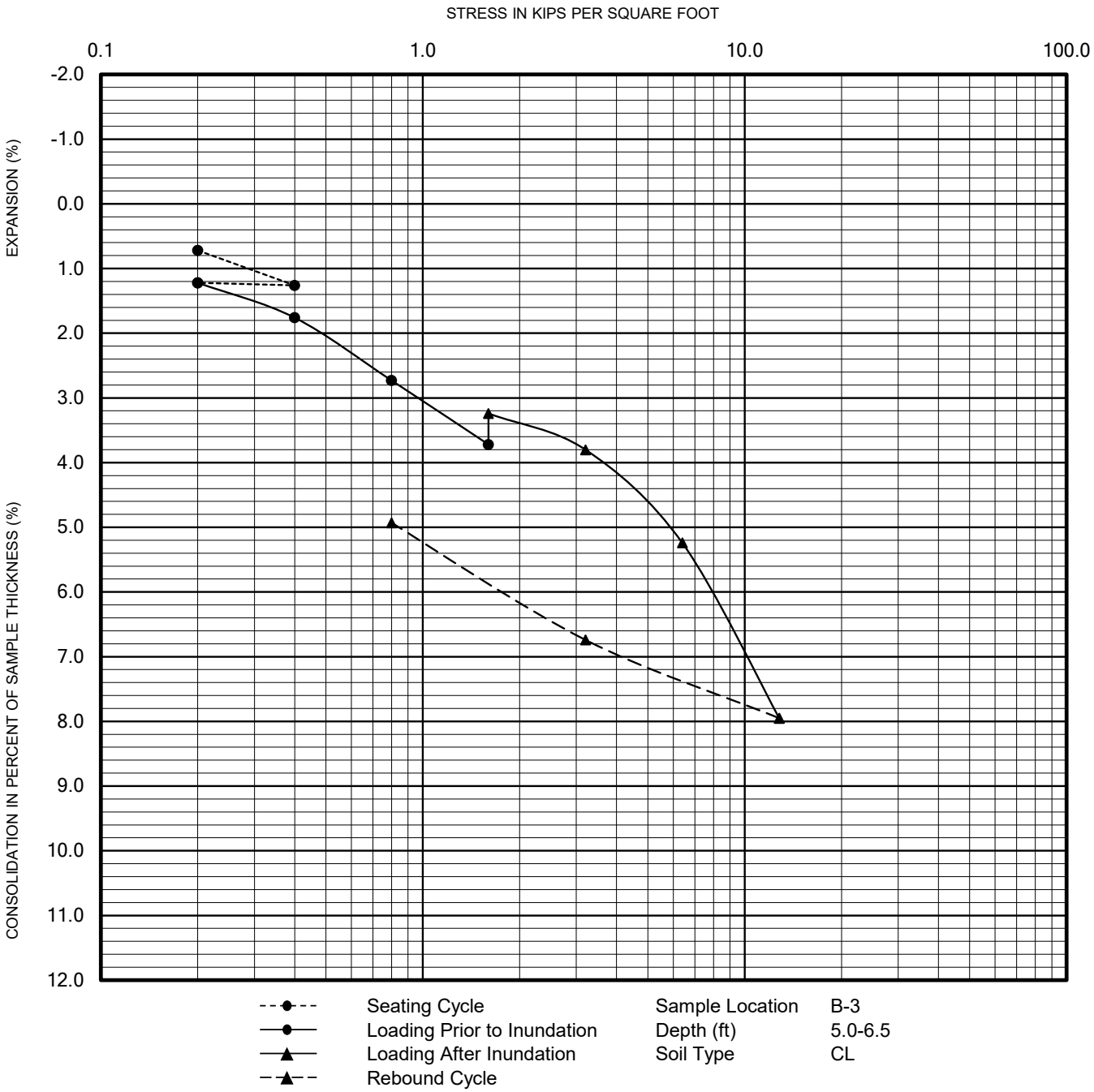

PERFORMED IN GENERAL ACCORDANCE WITH ASTM D 2435

FIGURE B-4

CONSOLIDATION TEST RESULTS

MACARTHUR LAKE REHABILITATION PROJECT
LOS ANGELES, CALIFORNIA

211019003 | 7/22

Ninyo & Moore
Geotechnical & Environmental Sciences Consultants

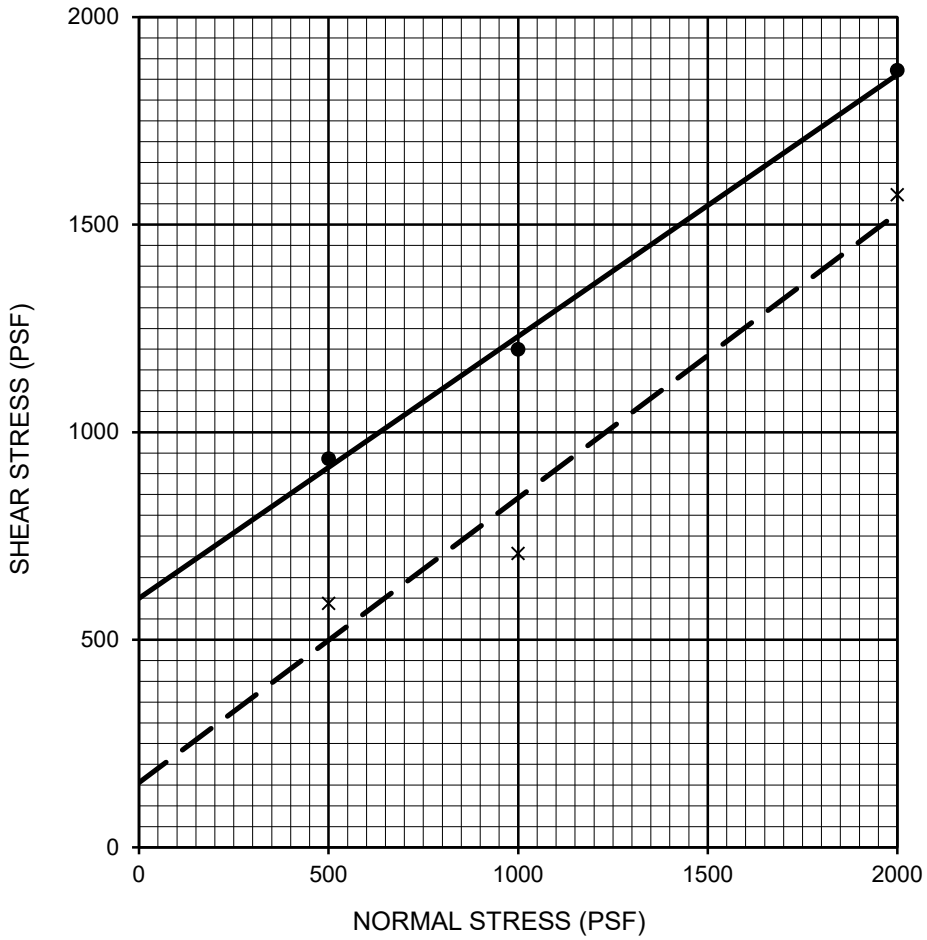

Description	Symbol	Sample Location	Depth (ft)	Shear Strength	Cohesion (psf)	Friction Angle (degrees)	Soil Type
SANDY LEAN CLAY	—●—	B-1	5.0-6.5	Peak	600	32	CL
SANDY LEAN CLAY	– – X – –	B-1	5.0-6.5	Ultimate	156	34	CL

PERFORMED IN GENERAL ACCORDANCE WITH ASTM D 3080

FIGURE B-5

DIRECT SHEAR TEST RESULTS

MACARTHUR LAKE REHABILITATION PROJECT
LOS ANGELES, CALIFORNIA

211019003 | 7/22

Ninyo & Moore
Geotechnical & Environmental Sciences Consultants

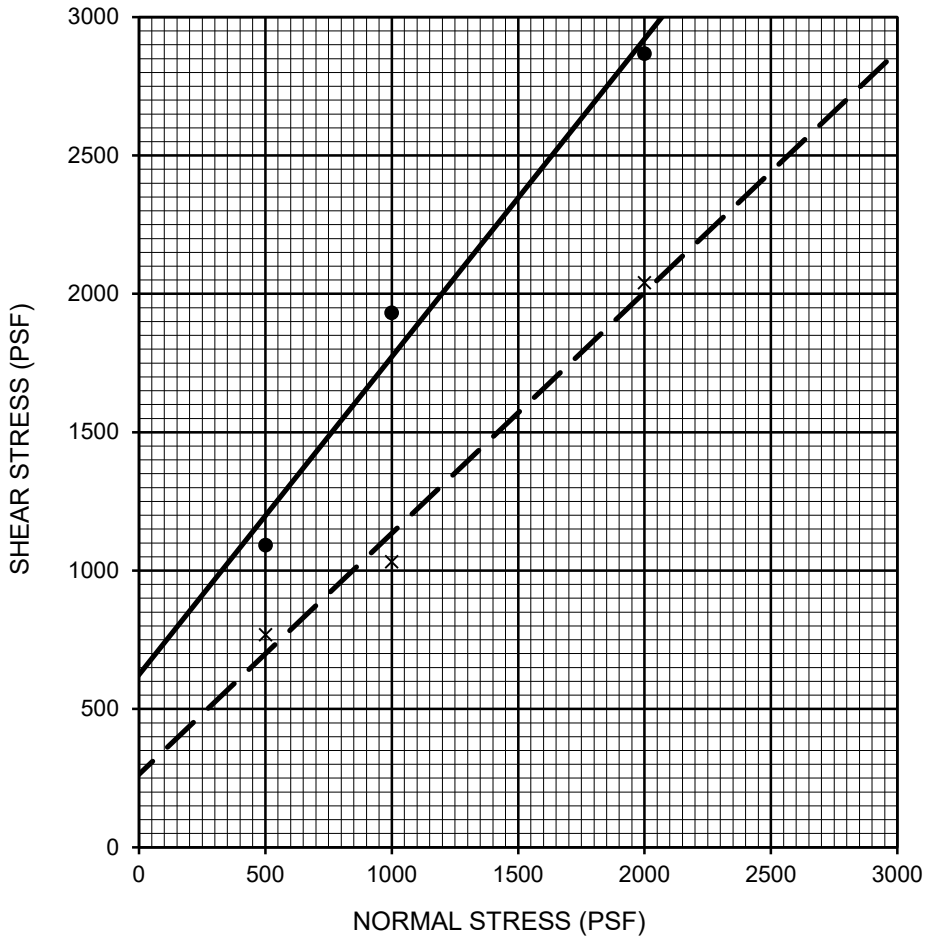

Description	Symbol	Sample Location	Depth (ft)	Shear Strength	Cohesion (psf)	Friction Angle (degrees)	Soil Type or Equivalent
CLAYEY SILTSTONE	—●—	B-2	5.0-6.5	Peak	624	49	ML
CLAYEY SILTSTONE	– – X – –	B-2	5.0-6.5	Ultimate	264	41	ML

PERFORMED IN GENERAL ACCORDANCE WITH ASTM D 3080

FIGURE B-6

DIRECT SHEAR TEST RESULTS

MACARTHUR LAKE REHABILITATION PROJECT
LOS ANGELES, CALIFORNIA

211019003 | 7/22

Ninyo & Moore
Geotechnical & Environmental Sciences Consultants

SAMPLE LOCATION	SAMPLE DEPTH (ft)	INITIAL MOISTURE (percent)	COMPACTED DRY DENSITY (pcf)	FINAL MOISTURE (percent)	VOLUMETRIC SWELL (in)	EXPANSION INDEX	POTENTIAL EXPANSION
B-3	3.0-5.0	11.5	102.6	25.5	0.055	55	Medium

PERFORMED IN GENERAL ACCORDANCE WITH ☐ UBC STANDARD 18-2 ☑ ASTM D 4829

FIGURE B-7

EXPANSION INDEX TEST RESULTS

MACARTHUR LAKE REHABILITATION PROJECT
LOS ANGELES, CALIFORNIA

211019003 | 7/22

Ninyo & Moore
Geotechnical & Environmental Sciences Consultants

SAMPLE LOCATION	SAMPLE DEPTH (ft)	pH [1]	RESISTIVITY [1] (ohm-cm)	SULFATE CONTENT [2]		CHLORIDE CONTENT [3] (ppm)
				(ppm)	(%)	
B-1	10.0-11.5	8.1	500	140	0.014	405
B-3	3.0-5.0	7.7	600	130	0.013	300

[1] PERFORMED IN GENERAL ACCORDANCE WITH CALIFORNIA TEST METHOD 643
[2] PERFORMED IN GENERAL ACCORDANCE WITH CALIFORNIA TEST METHOD 417
[3] PERFORMED IN GENERAL ACCORDANCE WITH CALIFORNIA TEST METHOD 422

FIGURE B-8

CORROSIVITY TEST RESULTS

MACARTHUR LAKE REHABILITATION PROJECT
LOS ANGELES, CALIFORNIA

211019003 | 7/22

Ninyo & Moore
Geotechnical & Environmental Sciences Consultants

APPENDIX C

Previous Borings Logs, Monitoring Well Logs, and Laboratory Test Results by Ninyo & Moore, 2019

NINYO & MOORE, 2019

BORING AND MONITORING WELL LOGS

Field Procedure for the Collection of Disturbed Samples

Disturbed soil samples were obtained in the field using the following methods.

Bulk Samples

Bulk samples of representative earth materials were obtained from the exploratory borings. The samples were bagged and transported to the laboratory for testing.

The Standard Penetration Test (SPT) Sampler

Disturbed drive samples of earth materials were obtained by means of a Standard Penetration Test sampler. The sampler is composed of a split barrel with an external diameter of 2 inches and an unlined internal diameter of 1-3/8 inches. The sampler was driven into the ground 12 to 18 inches with a 140-pound hammer falling freely from a height of 30 inches in general accordance with ASTM D 1586. The blow counts were recorded for every 6 inches of penetration; the blow counts reported on the logs are those for the last 12 inches of penetration. Soil samples were observed and removed from the sampler, bagged, sealed and transported to the laboratory for testing.

Field Procedure for the Collection of Relatively Undisturbed Samples

Relatively undisturbed soil samples were obtained in the field using the following method.

The Modified Split-Barrel Drive Sampler

The sampler, with an external diameter of 3.0 inches, was lined with 1-inch long, thin brass rings with inside diameters of approximately 2.4 inches. The sampler barrel was driven into the ground with the weight of a hammer in general accordance with ASTM D 3550. The driving weight was permitted to fall freely. The approximate length of the fall, the weight of the hammer, and the number of blows per foot of driving are presented on the boring logs as an index to the relative resistance of the materials sampled. The samples were removed from the sampler barrel in the brass rings, sealed, and transported to the laboratory for testing.

Shelby Tube

The Shelby tube is a seamless, thin-walled, steel tube having an external diameter of 2.4 or 3.0 inches and a length of 8 to 30 inches. The tube was connected to the drill rod or a hand tool and pushed into an undisturbed soil mass to obtain a relatively undisturbed sample of soft, cohesive soil in general accordance with ASTM D 1587. When the tube was almost full (to avoid overpenetration), it was withdrawn from the excavation, removed from the drill rod or hand tool, sealed at both ends, and transported to the laboratory for testing.

Soil Classification Chart Per ASTM D 2488

Primary Divisions			Secondary Divisions	
			Group Symbol	Group Name
COARSE-GRAINED SOILS more than 50% retained on No. 4 sieve	**GRAVEL** more than 50% of coarse fraction retained on No. 4 sieve	CLEAN GRAVEL less than 5% fines	GW	well-graded GRAVEL
			GP	poorly graded GRAVEL
		GRAVEL with DUAL CLASSIFICATIONS 5% to 12% fines	GW-GM	well-graded GRAVEL with silt
			GP-GM	poorly graded GRAVEL with silt
			GW-GC	well-graded GRAVEL with clay
			GP-GC	poorly graded GRAVEL with
		GRAVEL with FINES more than 12% fines	GM	silty GRAVEL
			GC	clayey GRAVEL
			GC-GM	silty, clayey GRAVEL
	SAND 50% or more of coarse fraction passes No. 4 sieve	CLEAN SAND less than 5% fines	SW	well-graded SAND
			SP	poorly graded SAND
		SAND with DUAL CLASSIFICATIONS 5% to 12% fines	SW-SM	well-graded SAND with silt
			SP-SM	poorly graded SAND with silt
			SW-SC	well-graded SAND with clay
			SP-SC	poorly graded SAND with clay
		SAND with FINES more than 12% fines	SM	silty SAND
			SC	clayey SAND
			SC-SM	silty, clayey SAND
FINE-GRAINED SOILS 50% or more passes No. 200 sieve	**SILT and CLAY** liquid limit less than 50%	INORGANIC	CL	lean CLAY
			ML	SILT
			CL-ML	silty CLAY
		ORGANIC	OL (PI > 4)	organic CLAY
			OL (PI < 4)	organic SILT
	SILT and CLAY liquid limit 50% or more	INORGANIC	CH	fat CLAY
			MH	elastic SILT
		ORGANIC	OH (plots on or above "A"-line)	organic CLAY
			OH (plots below "A"-line)	organic SILT
	Highly Organic Soils		PT	Peat

Grain Size

Description		Sieve Size	Grain Size	Approximate Size
Boulders		> 12"	> 12"	Larger than basketball-sized
Cobbles		3 - 12"	3 - 12"	Fist-sized to basketball-sized
Gravel	Coarse	3/4 - 3"	3/4 - 3"	Thumb-sized to fist-sized
	Fine	#4 - 3/4"	0.19 - 0.75"	Pea-sized to thumb-sized
Sand	Coarse	#10 - #4	0.079 - 0.19"	Rock-salt-sized to pea-sized
	Medium	#40 - #10	0.017 - 0.079"	Sugar-sized to rock-salt-sized
	Fine	#200 - #40	0.0029 - 0.017"	Flour-sized to sugar-sized
Fines		Passing #200	< 0.0029"	Flour-sized and smaller

Plasticity Chart

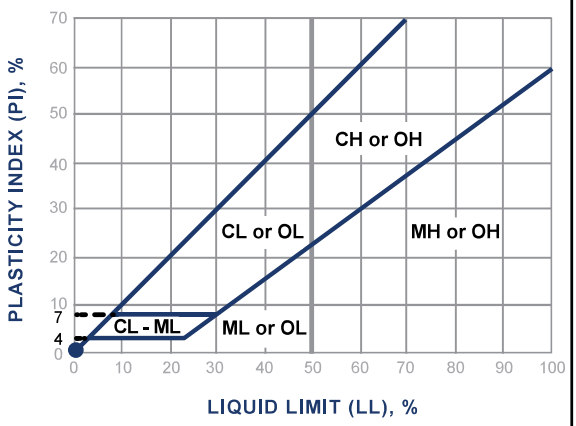

Apparent Density - Coarse-Grained Soil

Apparent Density	Spooling Cable or Cathead		Automatic Trip Hammer	
	SPT (blows/foot)	Modified Split Barrel (blows/foot)	SPT (blows/foot)	Modified Split Barrel (blows/foot)
Very Loose	≤ 4	≤ 8	≤ 3	≤ 5
Loose	5 - 10	9 - 21	4 - 7	6 - 14
Medium Dense	11 - 30	22 - 63	8 - 20	15 - 42
Dense	31 - 50	64 - 105	21 - 33	43 - 70
Very Dense	> 50	> 105	> 33	> 70

Consistency - Fine-Grained Soil

Consis-tency	Spooling Cable or Cathead		Automatic Trip Hammer	
	SPT (blows/foot)	Modified Split Barrel (blows/foot)	SPT (blows/foot)	Modified Split Barrel (blows/foot)
Very Soft	< 2	< 3	< 1	< 2
Soft	2 - 4	3 - 5	1 - 3	2 - 3
Firm	5 - 8	6 - 10	4 - 5	4 - 6
Stiff	9 - 15	11 - 20	6 - 10	7 - 13
Very Stiff	16 - 30	21 - 39	11 - 20	14 - 26
Hard	> 30	> 39	> 20	> 26

Ninyo & Moore
Geotechnical & Environmental Sciences Consultants

USCS METHOD OF SOIL CLASSIFICATION

BORING LOG EXPLANATION SHEET

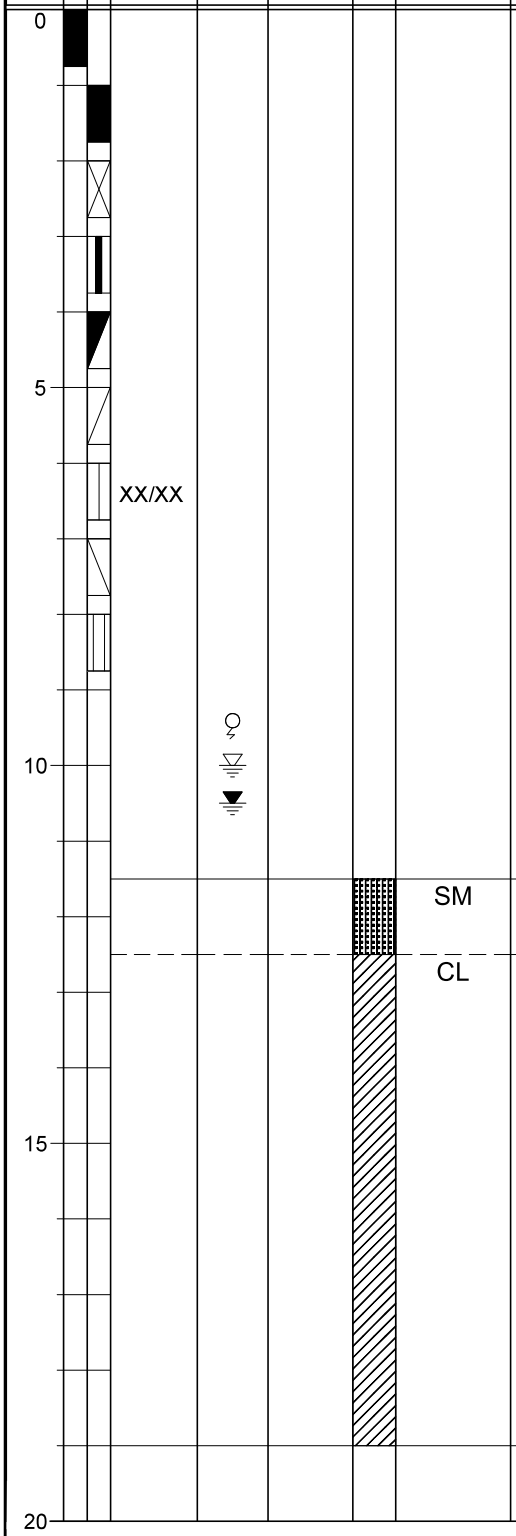

Bulk sample.

Modified split-barrel drive sampler.

No recovery with modified split-barrel drive sampler.

Sample retained by others.

Standard Penetration Test (SPT).

No recovery with a SPT.

Shelby tube sample. Distance pushed in inches/length of sample recovered in inches.

No recovery with Shelby tube sampler.

Continuous Push Sample.

Seepage.

Groundwater encountered during drilling.

Groundwater measured after drilling.

MAJOR MATERIAL TYPE (SOIL):

Solid line denotes unit change.

Dashed line denotes material change.

Attitudes: Strike/Dip
b: Bedding
c: Contact
j: Joint
f: Fracture
F: Fault
cs: Clay Seam
s: Shear
bss: Basal Slide Surface
sf: Shear Fracture
sz: Shear Zone
sbs: Shear Bedding Surface

The total depth line is a solid line that is drawn at the bottom of the boring.

DATE DRILLED 6/4/19 BORING NO. B-1

GROUND ELEVATION 265' ± (MSL) SHEET 1 OF 1

METHOD OF DRILLING 8" Hollow-Stem Auger (Martini Drilling)

DRIVE WEIGHT 140 lbs. (Auto. Trip Hammer) DROP 30"

SAMPLED BY AES LOGGED BY AES REVIEWED BY JRS/MLP

DEPTH (feet)	SAMPLES (Bulk / Driven)	BLOWS/FOOT	MOISTURE (%)	DRY DENSITY (PCF)	SYMBOL	CLASSIFICATION U.S.C.S.	DESCRIPTION/INTERPRETATION
0						SM	FILL: Brown, moist, medium dense, silty SAND; few to little rootlets. Few to little coarse gravel.
		21	19.5	104.6		CH	ALLUVIUM: Light brown to dark brown, moist, firm, fat CLAY with gravel-size siltstone fragments. Very stiff; trace coarse sand; trace fine gravel; trace cobbles; trace rootlets.
10		33	30.1	93.5			PUENTE FORMATION: Light gray to very light brown, moist, moderately indurated, moderately soft, clayey SILTSTONE; oxidation staining; laminated to very thinly bedded. Interbedded laminae of very dark brown claystone and light gray sand.
		29					
20		44	▼				Grayish brown; moderately to strongly indurated; moderately soft to moderately hard. @ 21': Groundwater measured approximately 40 minutes after completion of drilling.
		65					
30		77					
							Total Depth = 31.5 feet. Groundwater not encountered during drilling; groundwater measured at a depth of approximately 21 feet about 40 minutes after completion of drilling. Backfilled with bentonite-cement grout and capped with on-site soil on 6/4/19. Notes: Groundwater may rise to a level higher than that measured in borehole due to relatively slow rate of seepage in clay and several other factors as discussed in the report. Please refer to the report for groundwater monitoring recommendations. The ground elevation shown above is an estimation only. It is based on our interpretations of published maps and other documents reviewed for the purposes of this evaluation. It is not sufficiently accurate for preparing construction bids and design documents.
40							

FIGURE A- 1

Ninyo & Moore
Geotechnical & Environmental Sciences Consultants

MACARTHUR PARK LAKE PROJECT
LOS ANGELES, CALIFORNIA

DATE DRILLED 6/4/19 BORING NO. B-2

GROUND ELEVATION 260' ± (MSL) SHEET 1 OF 1

METHOD OF DRILLING 8" Hollow-Stem Auger (Martini Drilling)

DRIVE WEIGHT 140 lbs. (Auto. Trip Hammer) DROP 30"

SAMPLED BY AES LOGGED BY AES REVIEWED BY JRS/MLP

DEPTH (feet)	SAMPLES Bulk	SAMPLES Driven	BLOWS/FOOT	MOISTURE (%)	DRY DENSITY (PCF)	SYMBOL	CLASSIFICATION U.S.C.S.	DESCRIPTION/INTERPRETATION
0							SM	ASPHALT CONCRETE: Approximately 4 inches thick.
							SC	BASE: Very dark brown, moist, medium dense, silty SAND; approximately 3 inches thick.
								FILL: Light brown to reddish yellow, moist, loose to medium dense, clayey SAND; mottled, oxidation staining; few to little gravel; trace rootlets.
							CL	ALLUVIUM:
			2	14.5	108.3			Dark brown, moist, soft, sandy lean CLAY; little to few coarse gravel.
								@ 6': Groundwater measured after completion of drilling.
10			9	32.3	89.1			@ 10': Seepage; wet. Very dark brown; stiff; trace coarse sand.
			20					PUENTE FORMATION: Light yellowish brown to reddish yellow, moist, moderately indurated, moderately soft, clayey SILTSTONE; laminated to thinly bedded; oxidation staining. Gray to grayish brown; very thinly bedded.
20			65					Moderately to strongly indurated; moderately soft to moderately hard; interbedded laminae of dark brown claystone and light gray sand.
			71					
30			76					
								Total Dept = 31.5 feet. Groundwater not encountered during drilling; groundwater measured at a depth of approximately 6 feet after completion of drilling. Backfilled with bentonite-cement grout and capped with rapid-set concrete on 6/4/19.
40								Notes: Groundwater may rise to a level higher than that measured in borehole due to relatively slow rate of seepage in clay and several other factors as discussed in the report. Please refer to the report for groundwater monitoring recommendations. The ground elevation shown above is an estimation only. It is based on our interpretations of published maps and other documents reviewed for the purposes of this evaluation. It is not sufficiently accurate for preparing construction bids and design documents.

DATE DRILLED 6/3/19 BORING NO. B-3

GROUND ELEVATION 260' ± (MSL) SHEET 1 OF 1

METHOD OF DRILLING 8" Hollow-Stem Auger (Martini Drilling)

DRIVE WEIGHT 140 lbs. (Auto. Trip Hammer) DROP 30"

SAMPLED BY AES LOGGED BY AES REVIEWED BY JRS/MLP

DEPTH (feet)	SAMPLES (Bulk / Driven)	BLOWS/FOOT	MOISTURE (%)	DRY DENSITY (PCF)	SYMBOL	CLASSIFICATION U.S.C.S.	DESCRIPTION/INTERPRETATION
0						SM	FILL: Brown, moist, medium dense, silty SAND with gravel; trace gravel-size concrete fragments.
						SC	Yellow to light brown, moist, loose to medium dense, clayey SAND; mottled; trace rootlets.
		12					Loose.
		3	▼			CL	ALLUVIUM: Gray to reddish yellow, moist, soft, lean CLAY; mottled oxidation staining. @ 8': Groundwater measured 20 minutes after completion of drilling.
10		6	▽ 36.4	83.7			@ 10': Groundwater encountered during drilling. Wet; firm; oxidation staining.
		8					Stiff; trace fine gravel.
		7					Brown; pinhole porosity.
20		19	24.1	97.9			Very stiff; trace fine to coarse gravel.
		16					Possible gravel and cobbles.
30		47					PUENTE FORMATION: Grayish brown, moist, moderately indurated, soft, clayey SILTSTONE; interbedded laminae of light gray sand.
40							Total Depth = 31.5 feet. Groundwater measured at a depth of approximately 8 feet about 20 minutes after completion of drilling. Backfilled with bentonite-cement grout and capped with on-site soil on 6/3/19. Notes: Groundwater may rise to a level higher than that measured in borehole due to relatively slow rate of seepage in clay and several other factors as discussed in the report. Please refer to the report for groundwater monitoring recommendations. The ground elevation shown above is an estimation only. It is based on our interpretations of published maps and other documents reviewed for the purposes of this evaluation. It is not sufficiently accurate for preparing construction bids and design documents.

FIGURE A- 3

Ninyo & Moore
Geotechnical & Environmental Sciences Consultants

MACARTHUR PARK LAKE PROJECT
LOS ANGELES, CALIFORNIA

211019002 | 8/19

DATE DRILLED 6/4/19 BORING NO. B-3A

GROUND ELEVATION 260' ± (MSL) SHEET 1 OF 1

METHOD OF DRILLING 8" Hollow-Stem Auger (Martini Drilling)

DRIVE WEIGHT 140 lbs. (Auto. Trip Hammer) DROP 30"

SAMPLED BY AES LOGGED BY AES REVIEWED BY JRS/MLP

DEPTH (feet)	SAMPLES Bulk	SAMPLES Driven	BLOWS/FOOT	MOISTURE (%)	DRY DENSITY (PCF)	SYMBOL	CLASSIFICATION U.S.C.S.	DESCRIPTION/INTERPRETATION
0							SM	FILL: Brown, moist, medium dense to dense, silty SAND with gravel.
							SC	Light brown, moist, medium dense, clayey SAND; trace rootlets.
								Coarse sand.
			24"/20"	▼			CL	ALLUVIUM: Very dark brown, moist, soft, sandy lean CLAY. @ 8': Groundwater measured after drilling completed.
10			24"/22"					Mottled; very dark brown to reddish yellow.
			24"/19"	▽				@ 12': Groundwater encountered during drilling; wet.
			24"/19"					Dark brown; trace fine gravel.
			15"/12"					Moderately hard; trace coarse gravel.
20								Total Depth = 19 feet. Groundwater measured at a depth of approximately 8 feet after completion of drilling. Backfilled with bentonite-cement grout and capped with on-site soil on 6/4/19.
								Notes: Groundwater may rise to a level higher than that measured in borehole due to relatively slow rate of seepage in clay and several other factors as discussed in the report. Please refer to the report for groundwater monitoring recommendations.
30								The ground elevation shown above is an estimation only. It is based on our interpretations of published maps and other documents reviewed for the purposes of this evaluation. It is not sufficiently accurate for preparing construction bids and design documents.
40								

FIGURE A- 4

Ninyo & Moore
Geotechnical & Environmental Sciences Consultants

MACARTHUR PARK LAKE PROJECT
LOS ANGELES, CALIFORNIA

211019002 | 8/19

DATE DRILLED 6/3/19 BORING NO. B-4

GROUND ELEVATION 270' ± (MSL) SHEET 1 OF 3

METHOD OF DRILLING 8" Hollow-Stem Auger (Martini Drilling)

DRIVE WEIGHT 140 lbs. (Auto. Trip Hammer) DROP 30"

SAMPLED BY AES LOGGED BY AES REVIEWED BY JRS/MLP

DEPTH (feet)	SAMPLES (Bulk / Driven)	BLOWS/FOOT	MOISTURE (%)	DRY DENSITY (PCF)	SYMBOL	CLASSIFICATION U.S.C.S.	DESCRIPTION/INTERPRETATION
0						SM	FILL: Brown to light brown, loose to medium dense, silty SAND; little to few gravel; trace plastic debris.
						ML	ALLUVIUM: Yellow to light gray, moist, firm, SILT. Light brown; mottled; oxidation staining.
		19	39.7	80.0			PUENTE FORMATION: Reddish yellow, moist, moderately indurated, moderately soft, clayey SILTSTONE; laminated to very thinly bedded; interbedded laminae of gray sand.
10		10	52.3	69.6			Soft; oxidation staining; trace rootlets.
		78					Grayish brown to dark brown; moderately hard.
20		82					Olive brown to dark brown.
		76					
30		79					Very thin interbeds of very dark brown claystone.
		77	42.2	75.4			Weak to moderate hydrogen sulfide odor; no elevated P.I.D. readings.
40							

FIGURE A- 5

Ninyo & Moore
Geotechnical & Environmental Sciences Consultants

MACARTHUR PARK LAKE PROJECT
LOS ANGELES, CALIFORNIA

DATE DRILLED 6/3/19 BORING NO. B-4

GROUND ELEVATION 270' ± (MSL) SHEET 2 OF 3

METHOD OF DRILLING 8" Hollow-Stem Auger (Martini Drilling)

DRIVE WEIGHT 140 lbs. (Auto. Trip Hammer) DROP 30"

SAMPLED BY AES LOGGED BY AES REVIEWED BY JRS/MLP

DEPTH (feet)	SAMPLES (Bulk / Driven)	BLOWS/FOOT	MOISTURE (%)	DRY DENSITY (PCF)	SYMBOL	CLASSIFICATION U.S.C.S.	DESCRIPTION/INTERPRETATION
40	Driven	87					PUENTE FORMATION: (Continued) Dark grayish brown to dark brown, moist, strongly indurated, moderately hard, clayey SILTSTONE; laminated to thinly bedded; very thin interbeds of dark brown claystone.
	Driven	88					
50	Driven	90					Interbedded laminae of light gray sand.
	Driven	43					
60	Driven	43					Dark olive brown to dark brown.
	Driven	39	32.0				
70	Driven	41					
	Driven	41					
80			▼				@ 78': Groundwater measured after drilling completed.

FIGURE A- 6

Ninyo & Moore
Geotechnical & Environmental Sciences Consultants

MACARTHUR PARK LAKE PROJECT
LOS ANGELES, CALIFORNIA

DATE DRILLED 6/3/19 BORING NO. B-4

GROUND ELEVATION 270' ± (MSL) SHEET 3 OF 3

METHOD OF DRILLING 8" Hollow-Stem Auger (Martini Drilling)

DRIVE WEIGHT 140 lbs. (Auto. Trip Hammer) DROP 30"

SAMPLED BY AES LOGGED BY AES REVIEWED BY JRS/MLP

DEPTH (feet)	SAMPLES Bulk	SAMPLES Driven	BLOWS/FOOT	MOISTURE (%)	DRY DENSITY (PCF)	SYMBOL	CLASSIFICATION U.S.C.S.	DESCRIPTION/INTERPRETATION
80			73					PUENTE FORMATION: (Continued) Dark brown to gray, moist, moderately indurated, moderately soft, SILTSTONE; laminated to very thinly bedded.
								Total Depth = 81.5 feet. Groundwater not encountered during drilling; groundwater measured at a depth of approximately 78 feet about 30 minutes after completion of drilling. Backfilled with bentonite-cement grout and capped with on-site soil on 6/3/19. Notes: Groundwater may rise to a level higher than that measured in borehole due to relatively slow rate of seepage in clay and several other factors as discussed in the report. Please refer to the report for groundwater monitoring recommendations. The ground elevation shown above is an estimation only. It is based on our interpretations of published maps and other documents reviewed for the purposes of this evaluation. It is not sufficiently accurate for preparing construction bids and design documents.
90								
100								
110								
120								

DATE DRILLED 5/31/19 BORING NO. B-5

GROUND ELEVATION 260' ± (MSL) SHEET 1 OF 3

METHOD OF DRILLING 8" Hollow-Stem Auger (Martini Drilling)

DRIVE WEIGHT 140 lbs. (Auto. Trip Hammer) DROP 30"

SAMPLED BY AES LOGGED BY AES REVIEWED BY JRS/MLP

DEPTH (feet)	SAMPLES (Bulk / Driven)	BLOWS/FOOT	MOISTURE (%)	DRY DENSITY (PCF)	SYMBOL	CLASSIFICATION U.S.C.S.	DESCRIPTION/INTERPRETATION
0						SM	FILL: Brown, moist, loose to medium dense, silty SAND; little to few rootlets; trace trash.
						SM	ALLUVIUM: Brown, moist, medium dense to dense, silty SAND; few to little gravel; trace rootlets.
						SC	Yellow to light brown, moist, loose, clayey SAND; medium sand; trace rootlets; trace fine gravel; pinhole porosity; oxidation staining.
		13	11.9	112.2		CH	Dark brown, moist, stiff, sandy fat CLAY.
		2					Reddish yellow to olive gray; soft; mottled; oxidation staining.
10		9	28.7	91.3			Stiff; trace decomposed rootlets; trace fine gravel.
		11					Dark olive gray to dark brown; some coarse gravel.
20		23					Very stiff.
		52					Hard.
		20					PUENTE FORMATION: Dark brown, moist, moderately indurated, moderately soft, clayey SILTSTONE.
		54	35.5	84.0			Weak to moderate hydrogen sulfide odor.
30		53					Interbedded laminae of light gray sand.
		54					Dark brown.
40							

FIGURE A- 8

Ninyo & Moore
Geotechnical & Environmental Sciences Consultants

MACARTHUR PARK LAKE PROJECT
LOS ANGELES, CALIFORNIA

DATE DRILLED 5/31/19 BORING NO. B-5

GROUND ELEVATION 260' ± (MSL) SHEET 2 OF 3

METHOD OF DRILLING 8" Hollow-Stem Auger (Martini Drilling)

DRIVE WEIGHT 140 lbs. (Auto. Trip Hammer) DROP 30"

SAMPLED BY AES LOGGED BY AES REVIEWED BY JRS/MLP

DEPTH (feet)	SAMPLES Bulk	SAMPLES Driven	BLOWS/FOOT	MOISTURE (%)	DRY DENSITY (PCF)	SYMBOL	CLASSIFICATION U.S.C.S.	DESCRIPTION/INTERPRETATION
40		■	75					PUENTE FORMATION: (Continued) Dark brown, moist, moderately indurated, moderately hard, clayey SILTSTONE.
		■	83					Interbedded laminae of light gray sand.
50		■	76	48.3	67.5			
		◥	31					
60		◥	31					
		◥	32					
70		◥	32					
		◥	36					
80								

FIGURE A- 9

Ninyo & Moore
Geotechnical & Environmental Sciences Consultants

MACARTHUR PARK LAKE PROJECT
LOS ANGELES, CALIFORNIA

DATE DRILLED 5/31/19 BORING NO. B-5

GROUND ELEVATION 260' ± (MSL) SHEET 3 OF 3

METHOD OF DRILLING 8" Hollow-Stem Auger (Martini Drilling)

DRIVE WEIGHT 140 lbs. (Auto. Trip Hammer) DROP 30"

SAMPLED BY AES LOGGED BY AES REVIEWED BY JRS/MLP

DEPTH (feet)	SAMPLES Bulk	SAMPLES Driven	BLOWS/FOOT	MOISTURE (%)	DRY DENSITY (PCF)	SYMBOL	CLASSIFICATION U.S.C.S.	DESCRIPTION/INTERPRETATION
80			36					PUENTE FORMATION: (Continued) Dark brown, moist, strongly indurated, moderately hard, clayey SILTSTONE; very thin interbeds of light gray sand.
								Total Depth = 81.5 feet. Groundwater not encountered during drilling. Backfilled with bentonite-cement grout and capped with on-site soil on 5/3/19.
								Notes: Groundwater, though not encountered at the time of drilling, may rise to a higher level due to seasonal variations in precipitation and several other factors as discussed in the report.
								The ground elevation shown above is an estimation only. It is based on our interpretations of published maps and other documents reviewed for the purposes of this evaluation. It is not sufficiently accurate for preparing construction bids and design documents.
90								
100								
110								
120								

DATE DRILLED 6/4/19 BORING NO. B-6

GROUND ELEVATION 270' ± (MSL) SHEET 1 OF 1

METHOD OF DRILLING 8" Hollow-Stem Auger (Martini Drilling)

DRIVE WEIGHT 140 lbs. (Auto. Trip Hammer) DROP 30"

SAMPLED BY AES LOGGED BY AES REVIEWED BY JRS/MLP

DEPTH (feet)	SAMPLES (Bulk / Driven)	BLOWS/FOOT	MOISTURE (%)	DRY DENSITY (PCF)	SYMBOL	CLASSIFICATION U.S.C.S.	DESCRIPTION/INTERPRETATION
0						SM	ALLUVIUM: Brown, moist, loose to medium dense, silty SAND; few to little gravel; trace rootlets.
						SC	Light brown to yellowish brown, moist, loose, clayey SAND.
						CH	Yellow to very light brown, moist, firm to stiff, fat CLAY; trace rootlets.
		26	30.5	83.4			PUENTE FORMATION: Light brown to very light brown, moist, weakly indurated, soft, clayey SILTSTONE; oxidation staining; interbedded laminae of dark brown claystone and light gray sand; trace rootlets.
10		42					Light grayish brown to reddish yellow; moderately soft.
		35					
20		48					Grayish brown; moderately indurated to strongly indurated; moderately soft to moderately hard.
		66					Interbedded laminae of gray sand.
30		76					
							Total Depth = 31 feet. Groundwater not encountered during drilling. Backfilled with bentonite-cement grout and capped with on-site soil on 6/4/19. Notes: Groundwater, though not encountered at the time of drilling, may rise to a higher level due to seasonal variations in precipitation and several other factors as discussed in the report. The ground elevation shown above is an estimation only. It is based on our interpretations of published maps and other documents reviewed for the purposes of this evaluation. It is not sufficiently accurate for preparing construction bids and design documents.
40							

DATE DRILLED 5/30/19 BORING NO. MW-1

GROUND ELEVATION 260' ± (MSL) SHEET 1 OF 2

METHOD OF DRILLING 8" Hollow-Stem Auger (Martini Drilling)

DRIVE WEIGHT 140 lbs. (Auto. Trip Hammer) DROP 30"

SAMPLED BY AES LOGGED BY AES REVIEWED BY JRS/MLP

DEPTH (feet)	SAMPLES (Bulk / Driven)	BLOWS/FOOT	MOISTURE (%)	DRY DENSITY (PCF)	SYMBOL	CLASSIFICATION U.S.C.S.	WELL CONSTRUCTION	DESCRIPTION/INTERPRETATION
0						SM		FILL: Brown, moist, loose to medium dense, silty SAND; trace rootlets; trace gravel; trace glass and plastic trash.
		12	17.1	94.6		CL		ALLUVIUM: Dark brown, moist, firm, lean CLAY; oxidation staining; trace rootlets. Stiff.
		10	38.6					PUENTE FORMATION: Light brown to reddish yellow, moist, weakly to moderately indurated, very soft, clayey SILTSTONE; laminated to very thinly bedded; oxidation staining; laminae of reddish yellow sand; trace rootlets. @ 8.3': Groundwater measured on 6/7/19.
10		20	44.0	74.0				
		14	39.7					Light gray to gray; very thin interbeds of dark brown claystone.
		23						Interbedded laminae of light gray sand.
		36						
20		92						Dark gray to dark brown; moderately to strongly indurated; moderately hard.
		44						Strongly indurated.
		90						
		34						
30		83						
								Total Depth = 32 feet. Monitoring well installed on 5/30/19. Groundwater measured at a depth of approximately 19 feet on 5/31/19 and at approximately 8.3 feet on 6/7/19.
								Notes: Groundwater may rise to a level higher than that measured in borehole due to seasonal variations in precipitation and several other factors as discussed in the report.
								The ground elevation shown above is an estimation only. It is based on our interpretations of published maps and other documents reviewed for the purposes of this evaluation. It is not
40								

FIGURE A- 12

Ninyo & Moore
Geotechnical & Environmental Sciences Consultants

MACARTHUR PARK LAKE PROJECT
LOS ANGELES, CALIFORNIA

DEPTH (feet)	SAMPLES Bulk	SAMPLES Driven	BLOWS/FOOT	MOISTURE (%)	DRY DENSITY (PCF)	SYMBOL	CLASSIFICATION U.S.C.S.	WELL CONSTRUCTION	DESCRIPTION/INTERPRETATION
									DATE DRILLED 5/30/19 BORING NO. MW-1 GROUND ELEVATION 260' ± (MSL) SHEET 2 OF 2 METHOD OF DRILLING 8" Hollow-Stem Auger (Martini Drilling) DRIVE WEIGHT 140 lbs. (Auto. Trip Hammer) DROP 30" SAMPLED BY AES LOGGED BY AES REVIEWED BY JRS/MLP
40									sufficiently accurate for preparing construction bids and design documents. Well Construction: 2-inch diameter PVC casing from 0.5' - 5.5'. 2-inch diameter PVC 0.020-inch slotted casing from 5.5' - 30.5'. Traffic-rated vault cover and Portland Cement Concrete from 0' - 1'. Hydrated bentonite pellets from 1' - 3'. No. 3 Sand from 3' - 32'. Locking Well Cap.
50									
60									
70									
80									

DATE DRILLED 5/30/19 BORING NO. MW-2

GROUND ELEVATION 260' ± (MSL) SHEET 1 OF 2

METHOD OF DRILLING 8" Hollow-Stem Auger (Martini Drilling)

DRIVE WEIGHT 140 lbs. (Auto. Trip Hammer) DROP 30"

SAMPLED BY AES LOGGED BY AES REVIEWED BY JRS/MLP

DEPTH (feet)	SAMPLES (Bulk / Driven)	BLOWS/FOOT	MOISTURE (%)	DRY DENSITY (PCF)	SYMBOL	CLASSIFICATION U.S.C.S.	WELL CONSTRUCTION	DESCRIPTION/INTERPRETATION
0						SM		FILL: Brown, moist, medium dense, silty SAND; few to little gravel; trace asphalt debris; trace cobbles; trace rootlets.
			▼					@ 4.5': Groundwater measured on 6/7/19.
		7	17.8	84.5		CL		Light gray to light brown, moist, stiff, sandy lean CLAY; mottled; oxidation staining; trace rootlets; trace plastic trash.
						CL		ALLUVIUM: Light gray to light brown, moist, stiff, lean CLAY; mottled; oxidation staining.
10			▽			SM		@ 10': Groundwater encountered during drilling. Dark gray, wet, very loose, silty SAND; coarse sand; trace fine gravel.
		3	30.2	91.7		CL		Dark gray, wet, soft, sandy lean CLAY.
		2	31.4					
								PUENTE FORMATION: Gray to light olive brown, wet, moderately indurated, soft, SILTSTONE; laminated to very thinly bedded, oxidation staining; interbedded laminae of dark brown claystone and light gray sand.
		18	35.6	84.9				
		9						
20		17						Yellow to reddish yellow. Gray.
		59						
30		69						
								Total Depth = 32 feet. Monitoring well installed on 5/30/19. Groundwater measured at a depth of approximately 4.3 feet on 5/31/19 and 4.5 feet on 6/7/19. Notes: Groundwater may rise to a level higher than that measured in borehole due to seasonal variations in precipitation and several other factors as discussed in the report. The ground elevation shown above is an estimation only. It is based on our interpretations of published maps and other documents reviewed for the purposes of this evaluation. It is not sufficiently accurate for preparing construction bids and design documents.
40								

FIGURE A- 14

Ninyo & Moore
Geotechnical & Environmental Sciences Consultants

MACARTHUR PARK LAKE PROJECT
LOS ANGELES, CALIFORNIA

DATE DRILLED 5/30/19 BORING NO. MW-2

GROUND ELEVATION 260' ± (MSL) SHEET 2 OF 2

METHOD OF DRILLING 8" Hollow-Stem Auger (Martini Drilling)

DRIVE WEIGHT 140 lbs. (Auto. Trip Hammer) DROP 30"

SAMPLED BY AES LOGGED BY AES REVIEWED BY JRS/MLP

DEPTH (feet)	SAMPLES Bulk	SAMPLES Driven	BLOWS/FOOT	MOISTURE (%)	DRY DENSITY (PCF)	SYMBOL	CLASSIFICATION U.S.C.S.	WELL CONSTRUCTION	DESCRIPTION/INTERPRETATION
40									Well Construction: 2-inch diameter PVC casing from 0.5' - 5.0'. 2-inch diameter PVC 0.020-inch slotted casing from 5.5' - 30.5'. Traffic-rated vault cover and Portland Cement Concrete from 0' - 1'. Hydrated bentonite pellets from 1' - 3'. No. 3 Sand from 3' - 32'. Locking well cap.
50									
60									
70									
80									

FIGURE A- 15

Ninyo & Moore
Geotechnical & Environmental Sciences Consultants

MACARTHUR PARK LAKE PROJECT
LOS ANGELES, CALIFORNIA

DATE DRILLED 5/29/19 BORING NO. MW-3

GROUND ELEVATION 265' ± (MSL) SHEET 1 OF 2

METHOD OF DRILLING 8" Hollow-Stem Auger (Martini Drilling)

DRIVE WEIGHT 140 lbs. (Auto. Trip Hammer) DROP 30"

SAMPLED BY AES LOGGED BY AES REVIEWED BY JRS/MLP

DEPTH (feet)	SAMPLES (Bulk / Driven)	BLOWS/FOOT	MOISTURE (%)	DRY DENSITY (PCF)	SYMBOL	CLASSIFICATION U.S.C.S.	WELL CONSTRUCTION	DESCRIPTION/INTERPRETATION
0						SM		FILL: Light brown, moist, loose to medium dense, silty SAND; coarse sand.
						CL		ALLUVIUM: Very dark brown, moist, firm, CLAY; trace rootlets.
			▼					@ 2.7': Groundwater measured 30 minutes after drilling completed.
			▽					
		5	25.4	99.2				@ 5': Groundwater encountered during drilling. Wet.
10		8	41.0	77.2				Brown to reddish yellow; stiff; trace fine gravel.
								Oxidation staining.
		21	30.8	92.2				Very stiff.
								PUENTE FORMATION: Yellow to olive gray, moist, weakly to moderately indurated, soft, SILTSTONE; laminated to very thinly bedded; oxidation staining; interbedded laminae of dark brown claystone and reddish yellow to light gray sand.
20		24						Yellow to reddish yellow; moderately indurated; moderately soft. Gray.
		77						Moderately hard.
30		65						Very dark grayish brown.
								Total Depth = 32 feet. Monitoring well installed on 5/29/19. Groundwater measured at a depth of approximately 2 feet on 6/7/19.
								Notes: Groundwater may rise to a level higher than that measured in borehole due to seasonal variations in precipitation and several other factors as discussed in the report.
								The ground elevation shown above is an estimation only. It is based on our interpretations of published maps and other documents reviewed for the purposes of this evaluation. It is not sufficiently accurate for preparing construction bids and design documents.
40								

FIGURE A- 16

Ninyo & Moore
Geotechnical & Environmental Sciences Consultants

MACARTHUR PARK LAKE PROJECT
LOS ANGELES, CALIFORNIA

DATE DRILLED 5/29/19 BORING NO. MW-3

GROUND ELEVATION 265' ± (MSL) SHEET 2 OF 2

METHOD OF DRILLING 8" Hollow-Stem Auger (Martini Drilling)

DRIVE WEIGHT 140 lbs. (Auto. Trip Hammer) DROP 30"

SAMPLED BY AES LOGGED BY AES REVIEWED BY JRS/MLP

DEPTH (feet)	SAMPLES Bulk	SAMPLES Driven	BLOWS/FOOT	MOISTURE (%)	DRY DENSITY (PCF)	SYMBOL	CLASSIFICATION U.S.C.S.	WELL CONSTRUCTION	DESCRIPTION/INTERPRETATION
40									Well Construction: 2-inch diameter PVC casing from 0.7' - 5.7'. 2-inch diameter PVC 0.020-inch slotted casing from 5.7' - 30.7'. Traffic-rated vault cover and Portland Cement Concrete from 0' - 1'. Hydrated bentonite pellets from 1' - 3'. No. 3 Sand from 3' - 32'. Locking well cap.
50									
60									
70									
80									

FIGURE A- 17

Ninyo & Moore
Geotechnical & Environmental Sciences Consultants

MACARTHUR PARK LAKE PROJECT
LOS ANGELES, CALIFORNIA

DATE DRILLED 5/29/19 BORING NO. MW-4

GROUND ELEVATION 265' ± (MSL) SHEET 1 OF 2

METHOD OF DRILLING 8" Hollow-Stem Auger (Martini Drilling)

DRIVE WEIGHT 140 lbs. (Auto. Trip Hammer) DROP 30"

SAMPLED BY JRS LOGGED BY JRS REVIEWED BY MLP

DEPTH (feet)	SAMPLES (Bulk / Driven)	BLOWS/FOOT	MOISTURE (%)	DRY DENSITY (PCF)	SYMBOL	CLASSIFICATION U.S.C.S.	WELL CONSTRUCTION	DESCRIPTION/INTERPRETATION
0			▼			CL		FILL: Very dark brown, moist, firm to stiff, sandy CLAY; mottled; trace coarse gravel. @ 1.3': Groundwater measured on 6/7/19.
								Firm.
		5	26.4	94.5		CL		ALLUVIUM: Very dark brown, moist, firm, CLAY; trace fine gravel.
		6	▽ 25.9	95.7				@ 8': Seepage encountered during drilling; wet.
10		8	22.2	104.5				Moist; stiff.
		20	22.7	103.4				Very stiff; fine sandy CLAY; increased silt content.
		8	24.0					Stiff; interbedded CLAY and sandy CLAY layers.
		15	31.5	90.6				Very stiff.
20		4	26.9					Dark brown; firm; interbedded; moisture content and consistency varies.
		8	▽ 25.0	100.0				@ 23': Seepage encountered during drilling. Brown; wet; stiff; sandy CLAY; fine to coarse sand; oxidation staining.
		7	24.9					PUENTE FORMATION: Light brown, moist, very soft, moderately indurated, clayey SILTSTONE; laminated to thinly bedded; oxidation staining.
		25						Soft to moderately soft; decrease in clay content.
30		43						
								Total Depth = 32 feet. Monitoring well installed on 5/29/19. Groundwater not encountered during drilling. Seepage encountered at approximately 8 feet and 23 feet during drilling; after seepage at 23 feet was encountered boring started filling with water; groundwater measured at approximately 1.3 feet on 6/7/19.
								Notes: Groundwater, though not encountered at the time of drilling, may rise to a higher level due to seasonal variations in precipitation and several other factors as discussed in the report.
40								

FIGURE A- 18

Ninyo & Moore
Geotechnical & Environmental Sciences Consultants

MACARTHUR PARK LAKE PROJECT
LOS ANGELES, CALIFORNIA

DATE DRILLED 5/29/19 BORING NO. MW-4

GROUND ELEVATION 265' ± (MSL) SHEET 2 OF 2

METHOD OF DRILLING 8" Hollow-Stem Auger (Martini Drilling)

DRIVE WEIGHT 140 lbs. (Auto. Trip Hammer) DROP 30"

SAMPLED BY JRS LOGGED BY JRS REVIEWED BY MLP

DEPTH (feet)	SAMPLES Bulk	SAMPLES Driven	BLOWS/FOOT	MOISTURE (%)	DRY DENSITY (PCF)	SYMBOL	CLASSIFICATION U.S.C.S.	WELL CONSTRUCTION	DESCRIPTION/INTERPRETATION
40									The ground elevation shown above is an estimation only. It is based on our interpretations of published maps and other documents reviewed for the purposes of this evaluation. It is not sufficiently accurate for preparing construction bids and design documents. Well Construction: 2-inch diameter PVC casing from 0.5' - 5.5'. 2-inch diameter PVC 0.020-inch slotted casing from 5.5' - 31.5'. Traffic-rated vault cover and Portland Cement Concrete from 0' - 1'. Hydrated bentonite pellets from 1' - 3'. No. 3 Sand from 3' - 32'. Locking well cap.
50									
60									
70									
80									

FIGURE A- 19

Ninyo & Moore
Geotechnical & Environmental Sciences Consultants

MACARTHUR PARK LAKE PROJECT
LOS ANGELES, CALIFORNIA

DATE DRILLED 6/4/19 BORING NO. HA-1

GROUND ELEVATION 274' ± (MSL) SHEET 1 OF 1

METHOD OF DRILLING 4" Hand Auger (Martini Drilling)

DRIVE WEIGHT NA DROP NA

SAMPLED BY AES LOGGED BY AES REVIEWED BY JRS/MLP

DEPTH (feet)	SAMPLES Bulk	SAMPLES Driven	BLOWS/FOOT	MOISTURE (%)	DRY DENSITY (PCF)	SYMBOL	CLASSIFICATION U.S.C.S.	DESCRIPTION/INTERPRETATION
0							SM	FILL: Reddish brown to light brown, moist, medium dense to dense, silty SAND; intermixed dark brown clay pieces.
							CL	Dark brown, moist, firm to stiff, sandy lean CLAY; trace rootlets. Yellow to light brown; mottled. Trace asphalt; few to little gravel. Refusal on brick debris.
10								Total Depth = 8 feet. (Refusal) Groundwater not encountered during excavation. Backfilled with bentonite chips and capped with on-site soil on 6/4/19. Notes: Groundwater, though not encountered at the time of excavation, may rise to a higher level due to seasonal variations in precipitation and several other factors as discussed in the report. The ground elevation shown above is an estimation only. It is based on our interpretations of published maps and other documents reviewed for the purposes of this evaluation. It is not sufficiently accurate for preparing construction bids and design documents.
20								
30								
40								

DATE DRILLED 6/4/19 BORING NO. HA-2

GROUND ELEVATION 268' ± (MSL) SHEET 1 OF 1

METHOD OF DRILLING 4" Hand Auger (Martini Drilling)

DRIVE WEIGHT NA DROP NA

SAMPLED BY AES LOGGED BY AES REVIEWED BY JRS/MLP

DEPTH (feet)	SAMPLES Bulk	SAMPLES Driven	BLOWS/FOOT	MOISTURE (%)	DRY DENSITY (PCF)	SYMBOL	CLASSIFICATION U.S.C.S.	DESCRIPTION/INTERPRETATION
0							ML	FILL: Light brown, yellow, and dark brown, moist, loose to medium dense, sandy SILT, with intermixed gravel-sized dark brown clay pieces; trace rootlets. Trash; plastic debris.
							CL	Yellow to light brown to gray, moist, firm to stiff, sandy lean CLAY; trace concrete fragments; mottled.
10								Total Depth = 10 feet. Groundwater not encountered during excavation. Backfilled with bentonite chips and capped with on-site soil on 6/4/19. Notes: Groundwater, though not encountered at the time of excavation, may rise to a higher level due to seasonal variations in precipitation and several other factors as discussed in the report. The ground elevation shown above is an estimation only. It is based on our interpretations of published maps and other documents reviewed for the purposes of this evaluation. It is not sufficiently accurate for preparing construction bids and design documents.
20								
30								
40								

FIGURE A- 21

Ninyo & Moore
Geotechnical & Environmental Sciences Consultants

MACARTHUR PARK LAKE PROJECT
LOS ANGELES, CALIFORNIA

NINYO & MOORE, 2019

GEOTECHNICAL LABORATORY TESTING

Classification
Soils were visually and texturally classified in accordance with the Unified Soil Classification System (USCS) in general accordance with ASTM D 2488. Soil classifications are indicated on the logs of the exploratory borings in Appendix A.

Moisture Content
The moisture content of samples obtained from the exploratory borings was evaluated in accordance with ASTM D 2216. The test results are presented on the logs of the exploratory borings in Appendix A.

In-Place Moisture and Density Tests
The moisture content and dry density of relatively undisturbed samples obtained from the exploratory borings were evaluated in general accordance with ASTM D 2937. The test results are presented on the logs of the exploratory borings in Appendix A.

Gradation Analysis
Gradation analysis tests were performed on selected representative soil samples in general accordance with ASTM D 422. The grain-size distribution curves are shown on Figures B-1 through B-3. These test results were utilized in evaluating the soil classifications in accordance with the USCS.

200 Wash
An evaluation of the percentage of particles finer than the No. 200 sieve in selected soil samples was performed in general accordance with ASTM D 1140. The results of the tests are presented on Figure B-4.

Atterberg Limits
Tests were performed on selected representative fine-grained soil samples to evaluate the liquid limit, plastic limit, and plasticity index in general accordance with ASTM D 4318. The test results were utilized to evaluate the soil classification in accordance with the USCS. The test results and classifications are shown on Figure B-5.

Consolidation Tests
Consolidation tests were performed on selected relatively undisturbed soil samples in general accordance with ASTM D 2435. The samples were inundated during testing to represent adverse field conditions. The percent of consolidation for each load cycle was recorded as a ratio of the amount of vertical compression to the original height of the sample. The results of the tests are summarized on Figures B-6 and B-7.

Direct Shear Tests
Direct shear tests were performed on relatively undisturbed samples in general accordance with ASTM D 3080 to evaluate the shear strength characteristics of selected materials. The samples were inundated during shearing to represent adverse field conditions. The results are shown on Figures B-8 through B-15.

Expansion Index Tests
The expansion index of selected materials was evaluated in general accordance with Uniform Building Code (UBC) Standard No. 18-2 (ASTM D 4829). Specimens were molded under a

specified compactive energy at approximately 50 percent saturation (plus or minus 1 percent). The prepared 1-inch thick by 4-inch diameter specimens were loaded with a surcharge of 144 pounds per square foot and were inundated with tap water. Readings of volumetric swell were made for a period of 24 hours. The results of these tests are presented on Figure B-16.

Soil Corrosivity Tests

Soil pH and resistivity tests were performed on representative samples in general accordance with California Test (CT) 643. The soluble sulfate and chloride content of the selected samples were evaluated in general accordance with CT 417 and CT 422, respectively. The test results are presented on Figure B-17.

GRAVEL		SAND			FINES	
Coarse	Fine	Coarse	Medium	Fine	SILT	CLAY

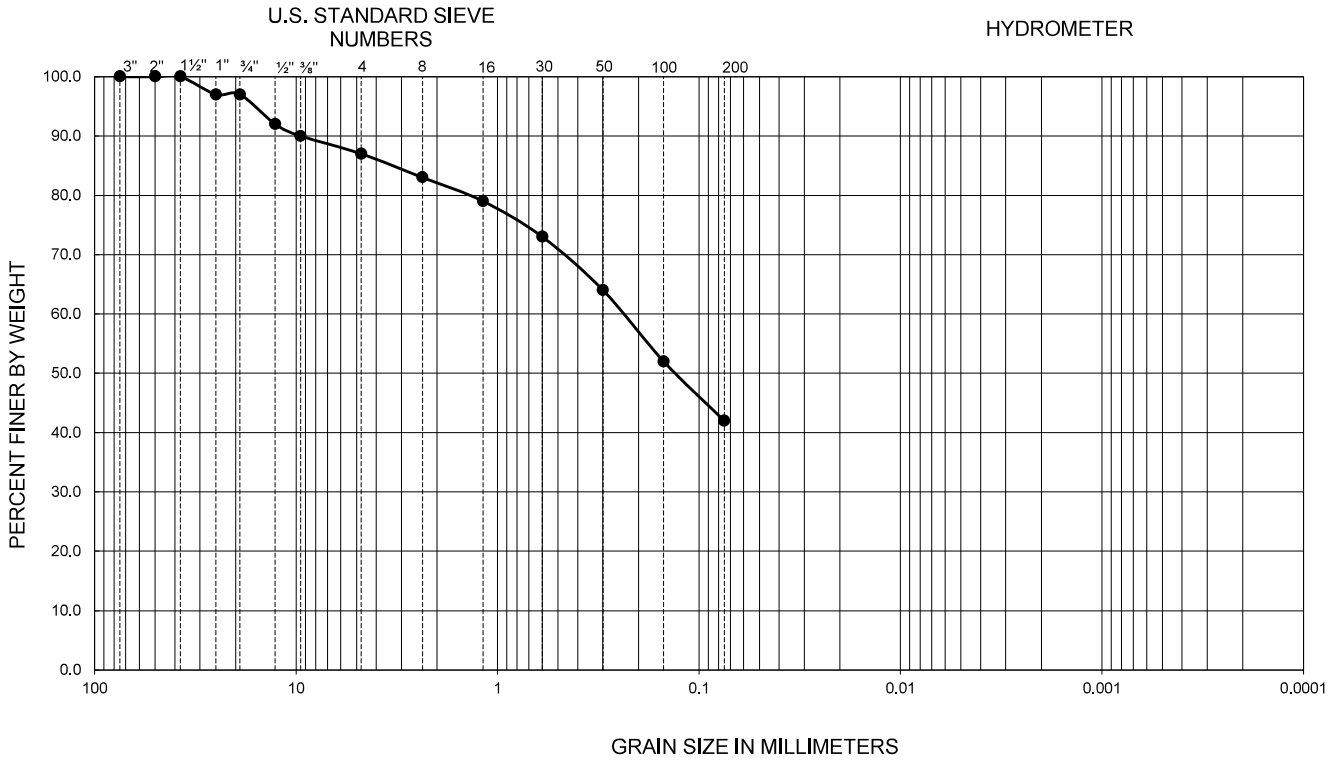

Symbol	Sample Location	Depth (ft)	Liquid Limit	Plastic Limit	Plasticity Index	D_{10}	D_{30}	D_{60}	C_u	C_c	Passing No. 200 (percent)	USCS
●	B-3	0.5-1.5	--	--	--	--	--	--	--	--	42	SM

PERFORMED IN GENERAL ACCORDANCE WITH ASTM D 422

FIGURE B-1

GRADATION TEST RESULTS

MACARTHUR PARK LAKE PROJECT
LOS ANGELES, CALIFORNIA

Ninyo & Moore
Geotechnical & Environmental Sciences Consultants

211019002 Fig B-1_SIEVE w No 8 @ B-3 0.5-1.5

GRAVEL		SAND			FINES	
Coarse	Fine	Coarse	Medium	Fine	SILT	CLAY

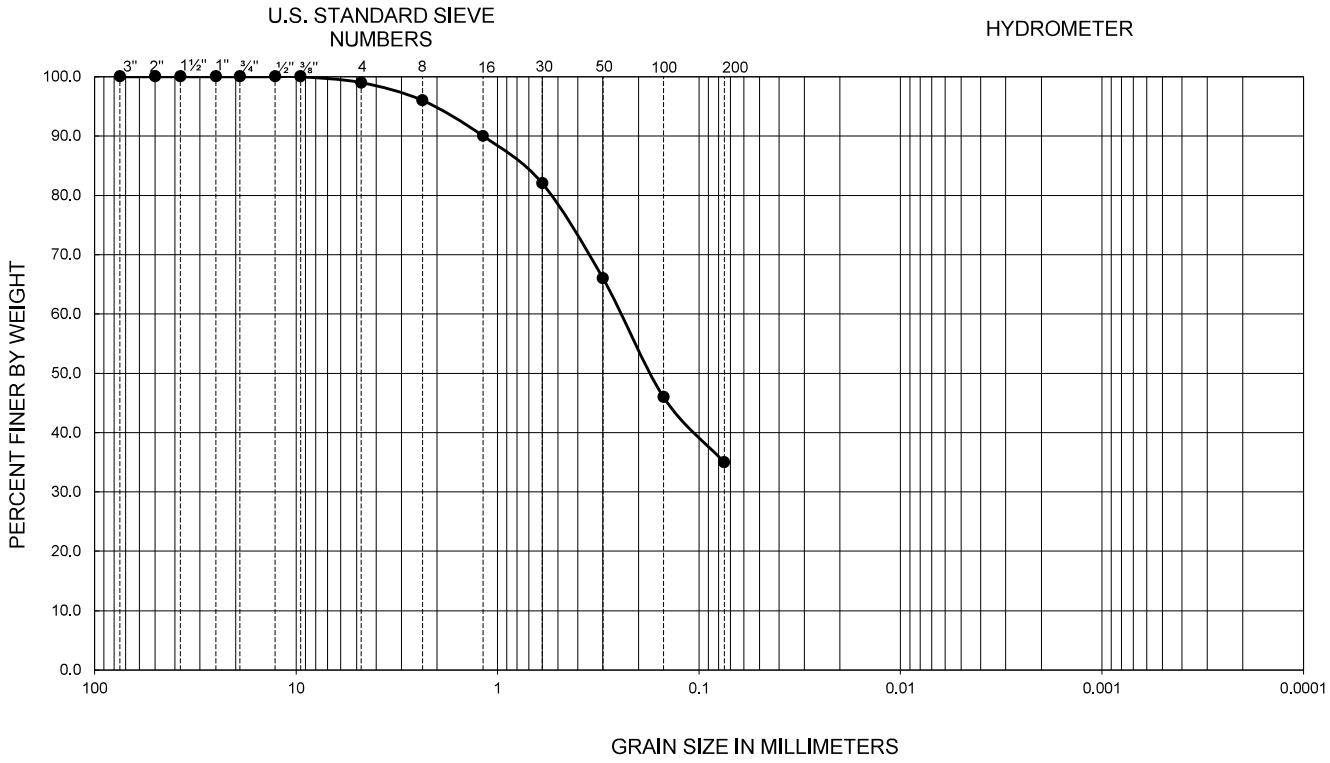

Symbol	Sample Location	Depth (ft)	Liquid Limit	Plastic Limit	Plasticity Index	D_{10}	D_{30}	D_{60}	C_u	C_c	Passing No. 200 (percent)	USCS
●	B-5	0.5-2.0	--	--	--	--	--	--	--	--	35	SM

PERFORMED IN GENERAL ACCORDANCE WITH ASTM D 422

FIGURE B-2

GRADATION TEST RESULTS

MACARTHUR PARK LAKE PROJECT
LOS ANGELES, CALIFORNIA

Ninyo & Moore
Geotechnical & Environmental Sciences Consultants

211019002 Fig B-2_SIEVE w No 8 @ B-5 0.6-2.0

GRAVEL		SAND			FINES	
Coarse	Fine	Coarse	Medium	Fine	SILT	CLAY

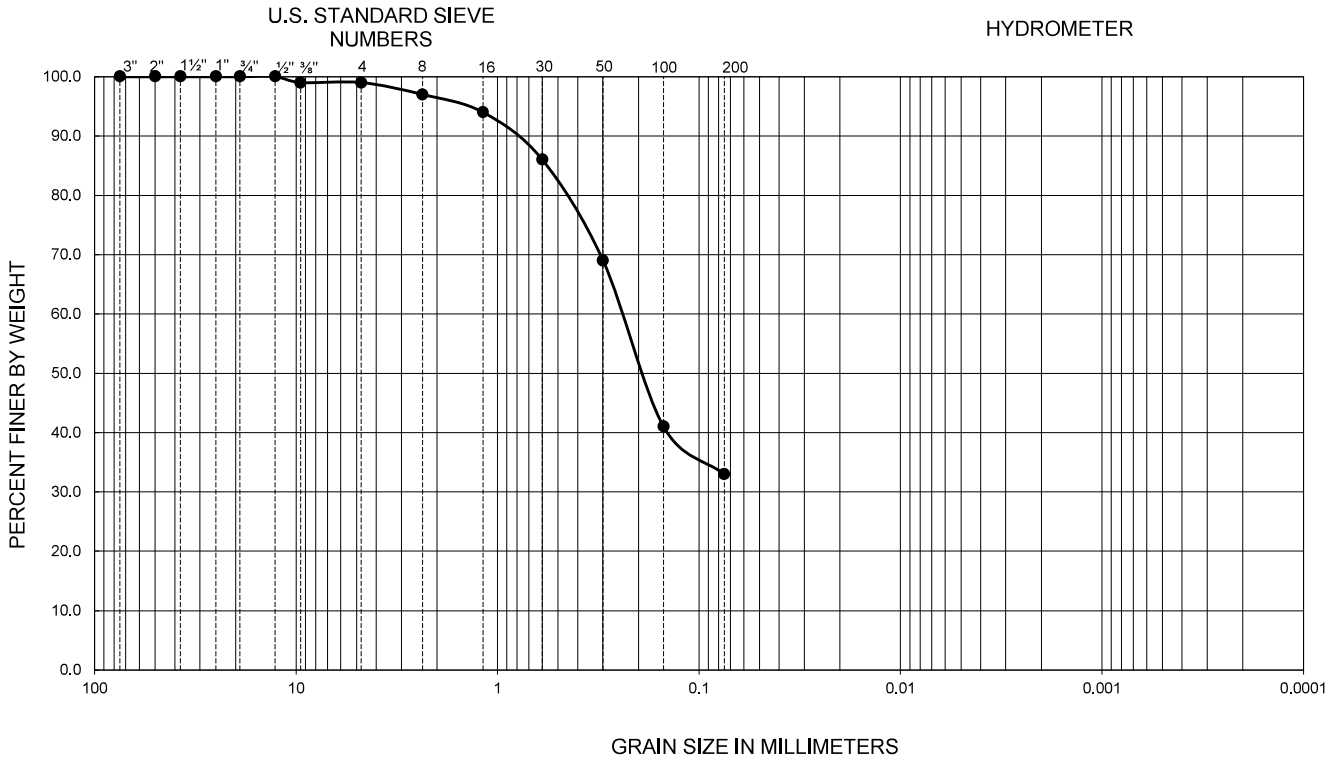

Symbol	Sample Location	Depth (ft)	Liquid Limit	Plastic Limit	Plasticity Index	D_{10}	D_{30}	D_{60}	C_u	C_c	Passing No. 200 (percent)	USCS
●	B-6	1.5-3.0	--	--	--	--	--	--	--	--	33	SC

PERFORMED IN GENERAL ACCORDANCE WITH ASTM D 422

FIGURE B-3

GRADATION TEST RESULTS

MACARTHUR PARK LAKE PROJECT
LOS ANGELES, CALIFORNIA

Ninyo & Moore
Geotechnical & Environmental Sciences Consultants

211019002 Fig B-3_SIEVE w No 8 @ B-6 1.5-3.0

SAMPLE LOCATION	SAMPLE DEPTH (ft)	DESCRIPTION	PERCENT PASSING NO. 4	PERCENT PASSING NO. 200	USCS (TOTAL SAMPLE)
B-1	5.0-6.5	FAT CLAY	99	70	CH
B-3	10.0-11.5	LEAN CLAY	100	76	CL
B-3	20.0-21.5	LEAN CLAY	99	68	CL
B-5	10.0-11.5	FAT CLAY	98	62	CH
MW-1	3.0-5.0	LEAN CLAY	97	70	CL
MW-2	5.0-6.5	LEAN CLAY	95	63	CL
MW-2	12.5-14.0	LEAN CLAY	94	62	CL
HA-1	3.0-8.0	LEAN CLAY	99	72	CL
HA-2	8.0-10.0	LEAN CLAY	96	50	CL

PERFORMED IN GENERAL ACCORDANCE WITH ASTM D 1140

FIGURE B-4

NO. 200 SIEVE ANALYSIS TEST RESULTS

MACARTHUR PARK LAKE PROJECT
LOS ANGELES, CALIFORNIA

211019002 | 8/19

Ninyo & Moore
Geotechnical & Environmental Sciences Consultants

SYMBOL	LOCATION	DEPTH (ft)	LIQUID LIMIT	PLASTIC LIMIT	PLASTICITY INDEX	USCS CLASSIFICATION (Fraction Finer Than No. 40 Sieve)	USCS
●	B-1	5.0-6.5	50	16	34	CH	CH
■	B-2	5.0-6.5	30	17	13	CL	CL
◆	B-3	10.0-11.5	38	21	17	CL	CL
○	B-3A	6.0-7.7	43	21	22	CL	CL
□	B-3A	12.0-13.6	41	16	25	CL	CL
Δ	B-5	10.0-11.5	53	22	31	CH	CH
X	B-6	3.0-5.0	57	26	31	CH	CH
+	HA-1	3.0-8.0	43	21	22	CL	CL

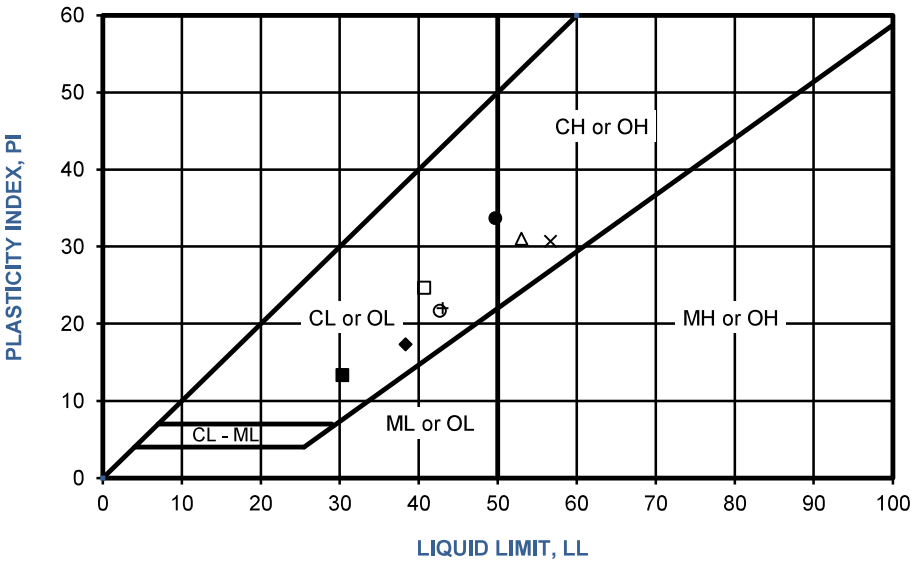

PERFORMED IN GENERAL ACCORDANCE WITH ASTM D 4318

FIGURE B-5

ATTERBERG LIMITS TEST RESULTS

MACARTHUR PARK LAKE PROJECT
LOS ANGELES, CALIFORNIA

211019002 | 8/19

Ninyo & Moore
Geotechnical & Environmental Sciences Consultants

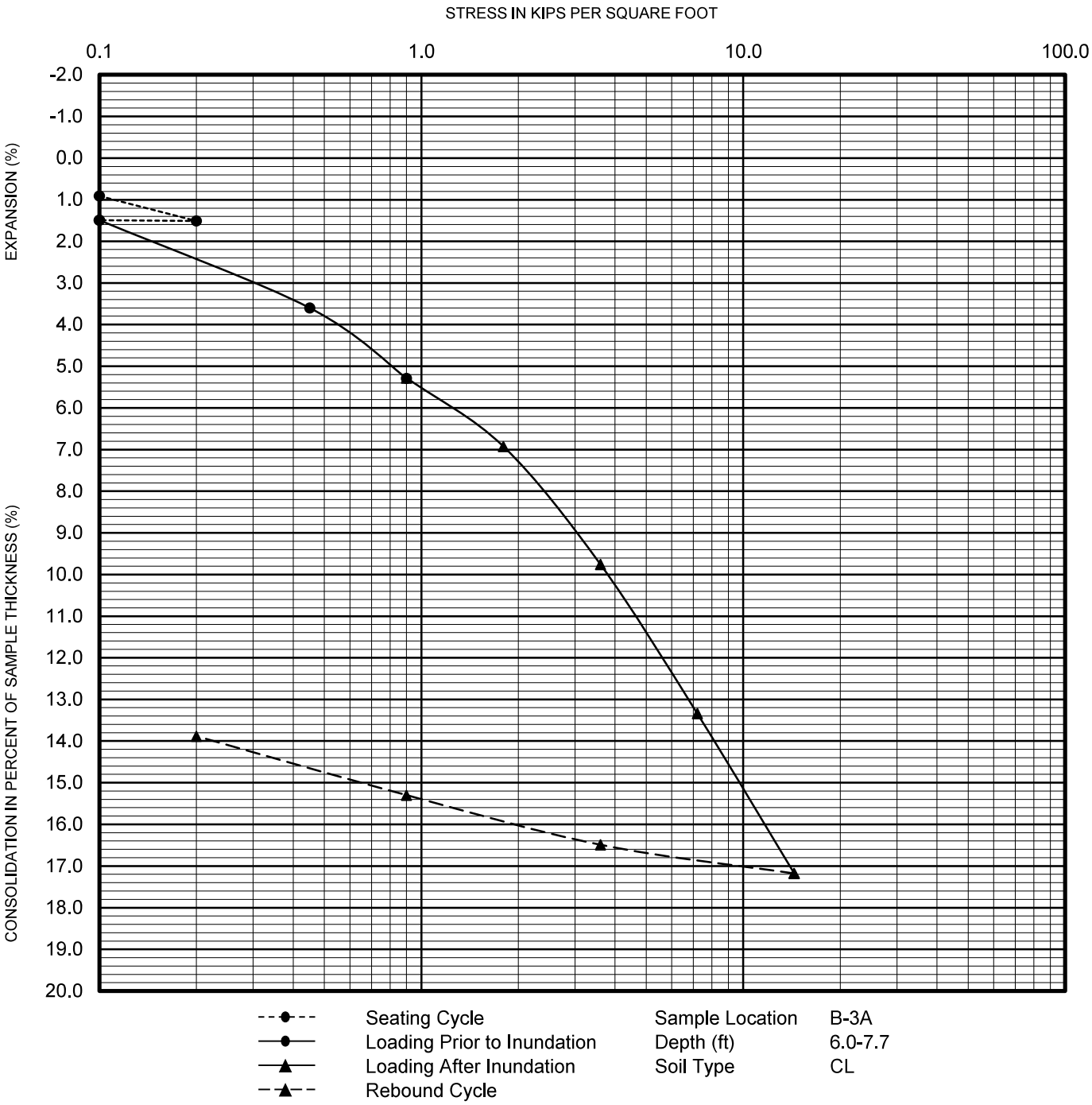

PERFORMED IN GENERAL ACCORDANCE WITH ASTM D 2435

FIGURE B-6

CONSOLIDATION TEST RESULTS

MACARTHUR PARK LAKE PROJECT
LOS ANGELES, CALIFORNIA

Ninyo & Moore
Geotechnical & Environmental Sciences Consultants

211019002 | 8/19

211019002 Fig B-6_CONSOLIDATION @ B-3A 6.0-7.7

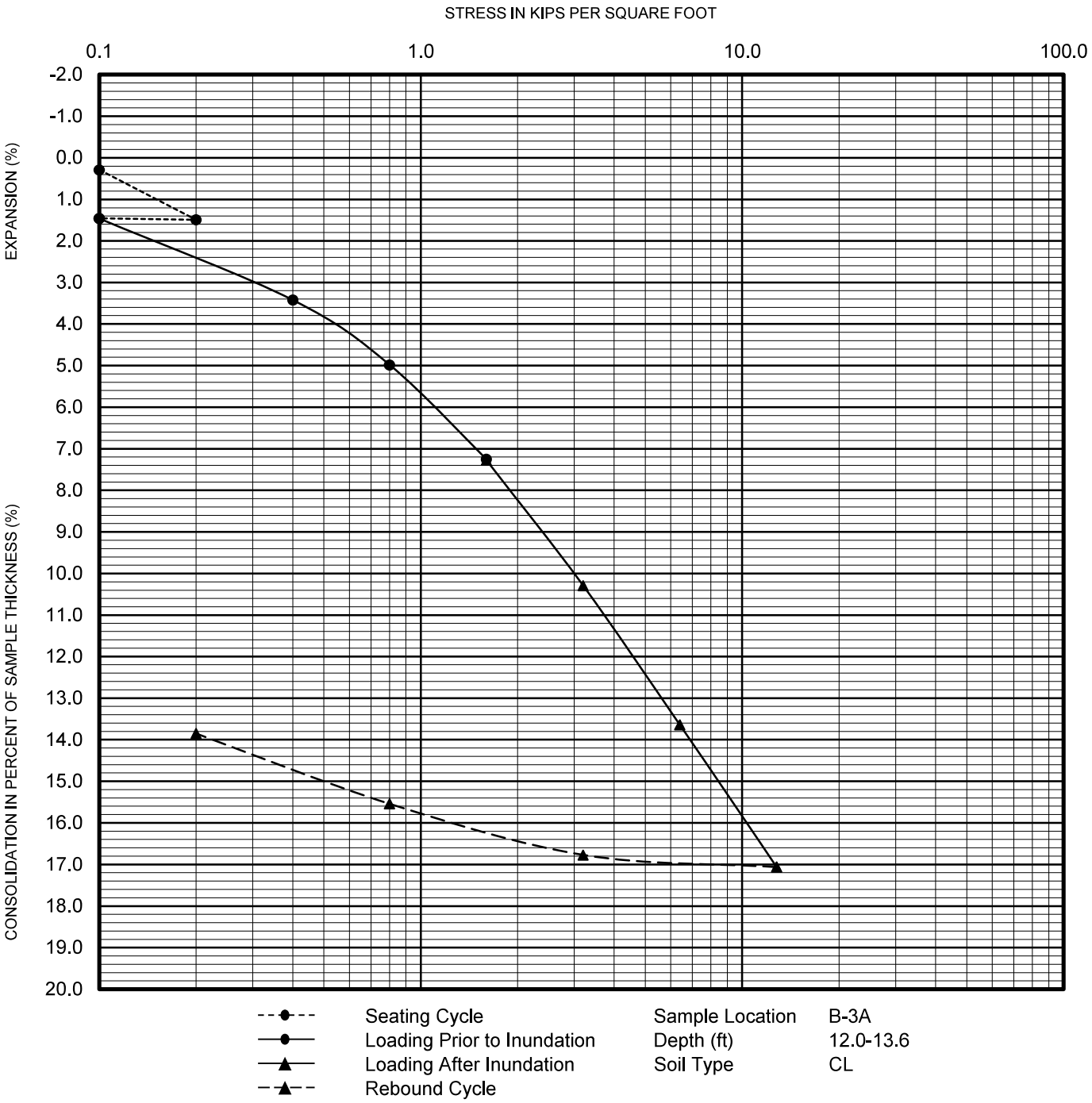

PERFORMED IN GENERAL ACCORDANCE WITH ASTM D 2435

FIGURE B-7

CONSOLIDATION TEST RESULTS

MACARTHUR PARK LAKE PROJECT
LOS ANGELES, CALIFORNIA

Ninyo & Moore
Geotechnical & Environmental Sciences Consultants

211019002 Fig B-7_CONSOLIDATION @ B-3A 12.0-13.6

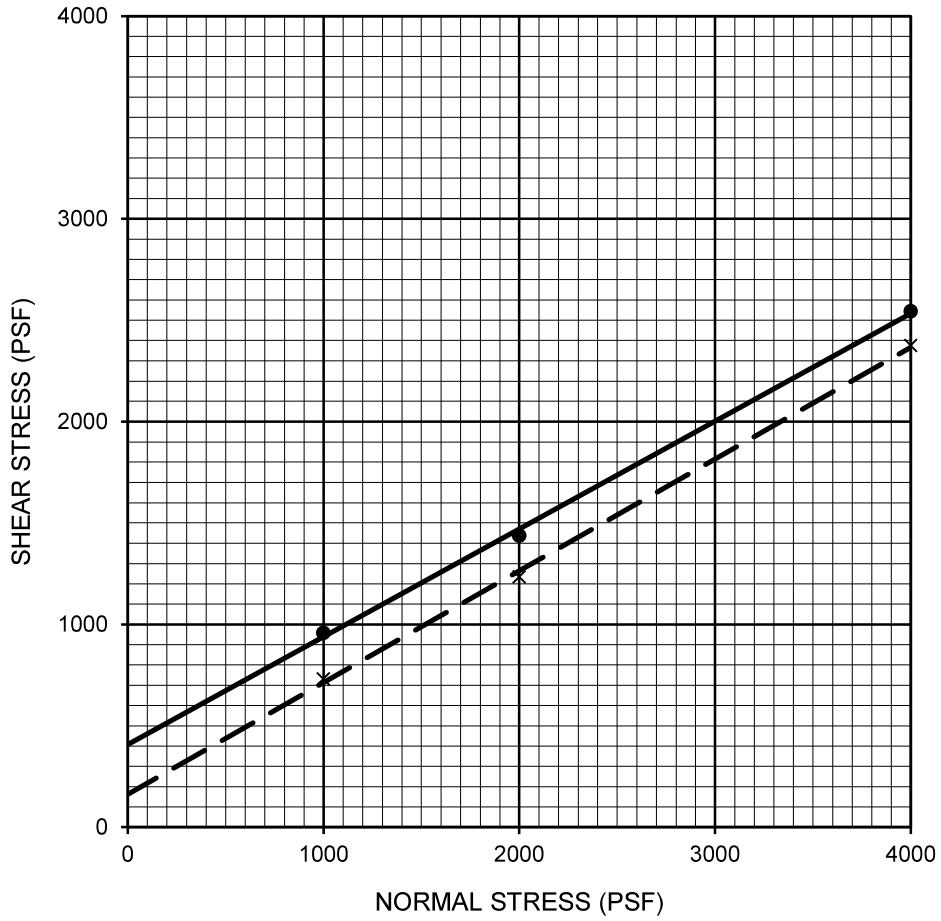

Description	Symbol	Sample Location	Depth (ft)	Shear Strength	Cohesion (psf)	Friction Angle (degrees)	Soil Type
FAT CLAY	—●—	B-1	5.0-6.5	Peak	408	28	CH
FAT CLAY	– –X– –	B-1	5.0-6.5	Ultimate	162	29	CH

Sample Number	Normal Stress (psf)	Moisture Content (%)		Dry Density (pcf)	Degree of Saturation (%)	
		Before Test	After Test		Before Test	After Test
A	1,000	20.2	25	103.2	88.9	99.9
B	2,000	20	24.2	102.8	87.1	99.9
C	4,000	20.9	23.2	104.3	94.6	99.9

PERFORMED IN GENERAL ACCORDANCE WITH ASTM D 3080

FIGURE B-8

DIRECT SHEAR TEST RESULTS

MACARTHUR PARK LAKE PROJECT
LOS ANGELES, CALIFORNIA

Ninyo & Moore
Geotechnical & Environmental Sciences Consultants

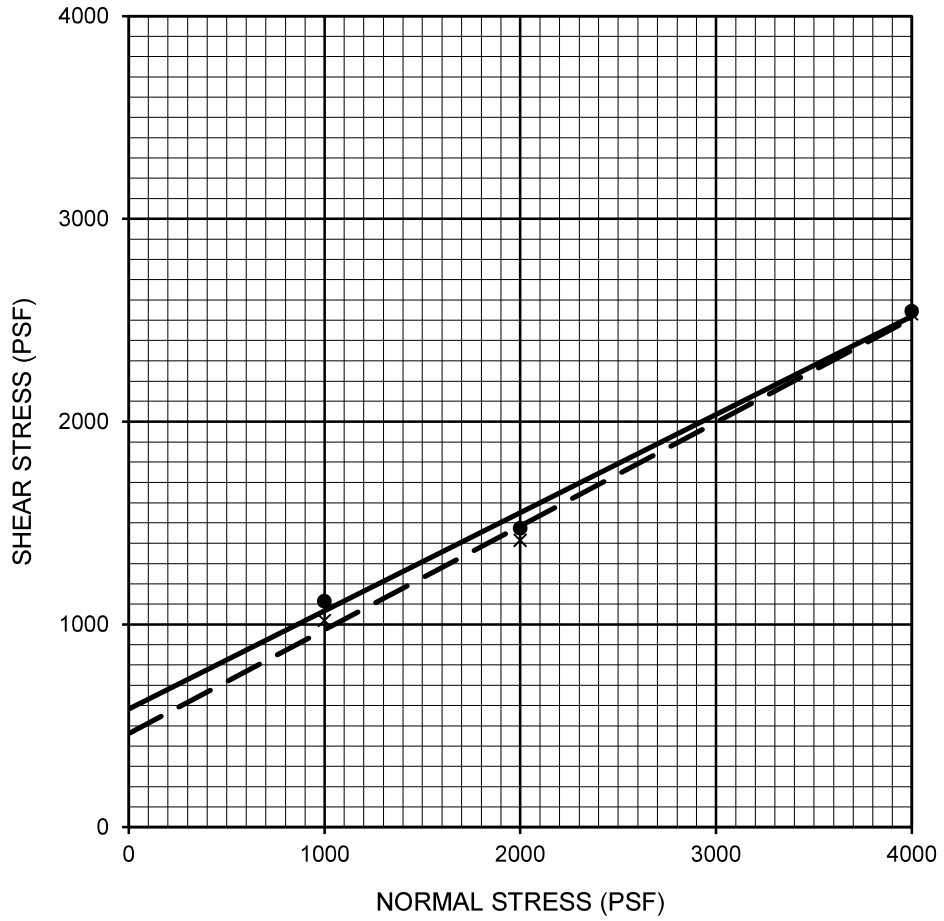

Description	Symbol	Sample Location	Depth (ft)	Shear Strength	Cohesion (psf)	Friction Angle (degrees)	Soil Type
LEAN CLAY	—●—	B-2	5.0-6.5	Peak	582	26	CL
LEAN CLAY	– –X– –	B-2	5.0-6.5	Ultimate	462	27	CL

Sample Number	Normal Stress (psf)	Moisture Content (%)		Dry Density (pcf)	Degree of Saturation (%)	
		Before Test	After Test		Before Test	After Test
A	1,000	19.1	19.1	107.8	94.8	94.8
B	2,000	21.1	20.3	104.3	95.5	91.9
C	4,000	26.6	21.7	98.2	99.9	84.1

PERFORMED IN GENERAL ACCORDANCE WITH ASTM D 3080

FIGURE B-9

DIRECT SHEAR TEST RESULTS

MACARTHUR PARK LAKE PROJECT
LOS ANGELES, CALIFORNIA

Ninyo & Moore
Geotechnical & Environmental Sciences Consultants

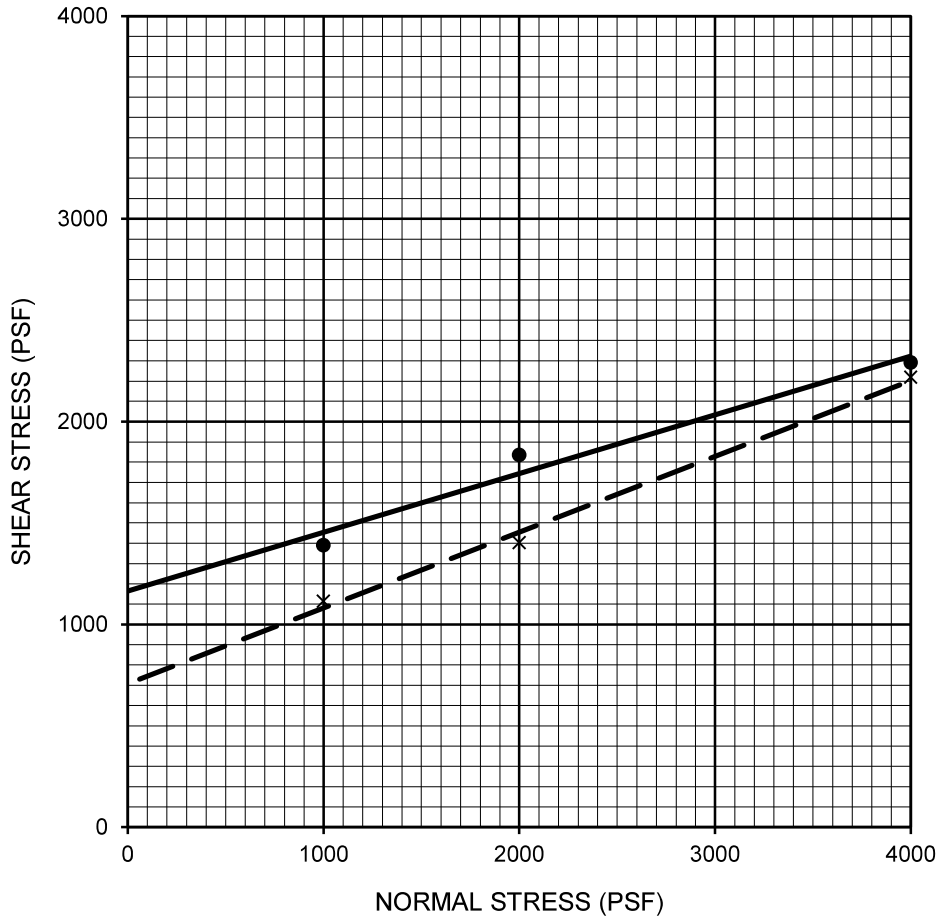

Description	Symbol	Sample Location	Depth (ft)	Shear Strength	Cohesion (psf)	Friction Angle (degrees)	Equivalent Soil Type
SILTSTONE	—●—	B-4	10.0-11.5	Peak	1164	16	CH
SILTSTONE	– –X– –	B-4	10.0-11.5	Ultimate	708	20	CH

Sample Number	Normal Stress (psf)	Moisture Content (%)		Dry Density (pcf)	Degree of Saturation (%)	
		Before Test	After Test		Before Test	After Test
A	1,000	39.8	45	80.5	99.9	99.9
B	2,000	58.8	60.1	64.3	99.1	99.9
C	4,000	55.5	54.2	66	97.7	95.4

PERFORMED IN GENERAL ACCORDANCE WITH ASTM D 3080

FIGURE B-10

DIRECT SHEAR TEST RESULTS

MACARTHUR PARK LAKE PROJECT
LOS ANGELES, CALIFORNIA

Ninyo & Moore
Geotechnical & Environmental Sciences Consultants

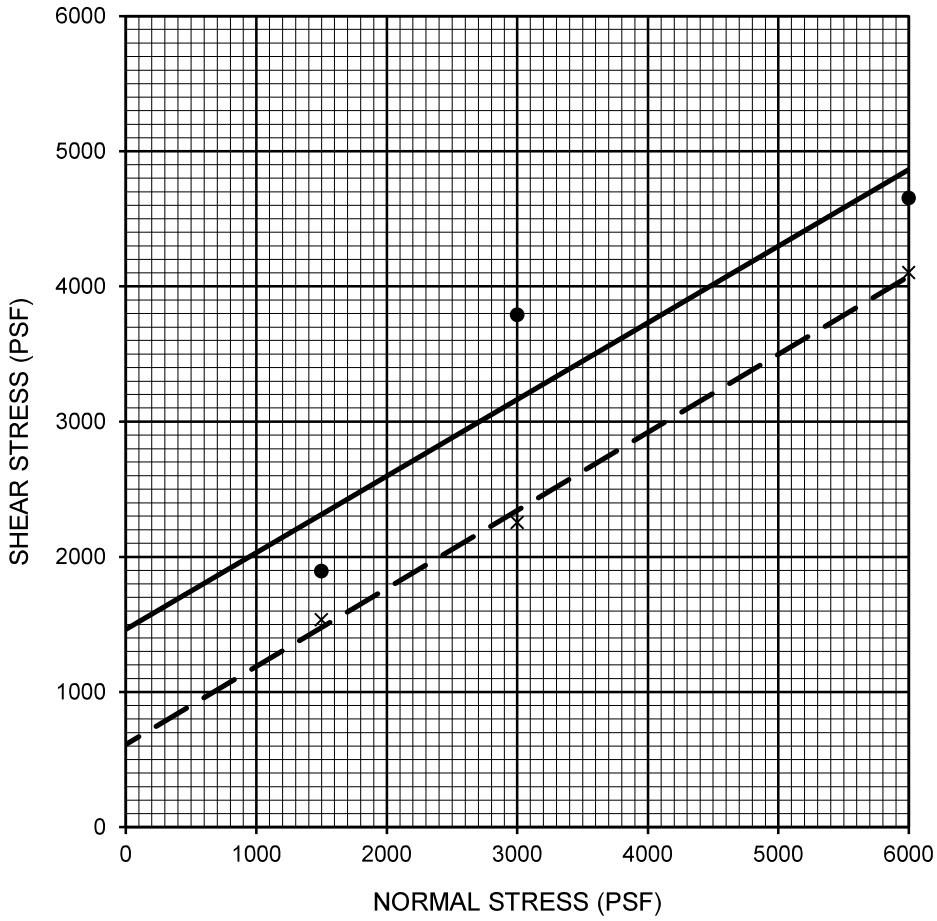

Description	Symbol	Sample Location	Depth (ft)	Shear Strength	Cohesion (psf)	Friction Angle (degrees)	Equivalent Soil Type
SILTSTONE	—●—	B-4	35.0-36.5	Peak	1464	30	CL
SILTSTONE	– –X– –	B-4	35.0-36.5	Ultimate	612	30	CL

Sample Number	Normal Stress (psf)	Moisture Content (%)		Dry Density (pcf)	Degree of Saturation (%)	
		Before Test	After Test		Before Test	After Test
A	1,500	42	46.6	77.5	98.2	99.9
B	3,000	41	46.4	78.3	97.7	99.9
C	6,000	42.8	47.4	77	98.8	99.9

PERFORMED IN GENERAL ACCORDANCE WITH ASTM D 3080

FIGURE B-11

DIRECT SHEAR TEST RESULTS

MACARTHUR PARK LAKE PROJECT
LOS ANGELES, CALIFORNIA

Ninyo & Moore
Geotechnical & Environmental Sciences Consultants

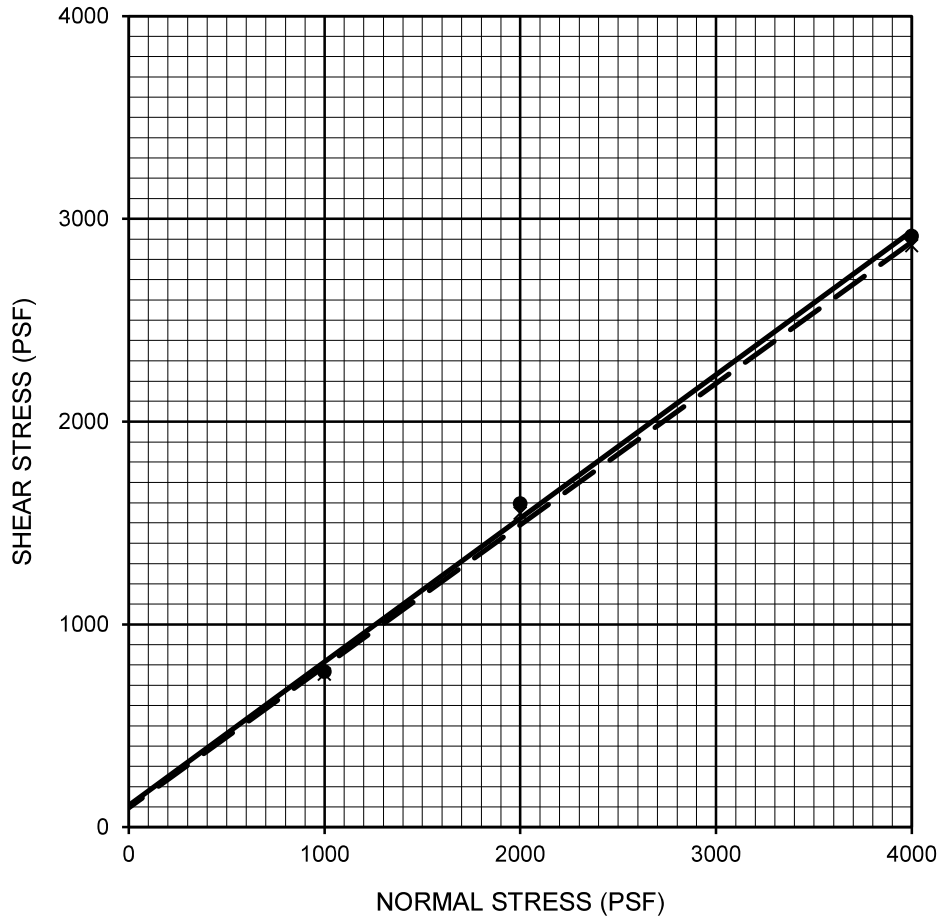

Description	Symbol	Sample Location	Depth (ft)	Shear Strength	Cohesion (psf)	Friction Angle (degrees)	Soil Type
FAT CLAY	—●—	B-5	10.0-11.5	Peak	108	35	CH
FAT CLAY	– –X– –	B-5	10.0-11.5	Ultimate	96	35	CH

Sample Number	Normal Stress (psf)	Moisture Content (%)		Dry Density (pcf)	Degree of Saturation (%)	
		Before Test	After Test		Before Test	After Test
A	1,000	21.2	21.4	105.0	97.7	98.7
B	2,000	27.2	25.3	101.1	99.9	99.9
C	4,000	22.4	19.1	106.6	99.9	91.8

PERFORMED IN GENERAL ACCORDANCE WITH ASTM D 3080

FIGURE B-12

DIRECT SHEAR TEST RESULTS

MACARTHUR PARK LAKE PROJECT
LOS ANGELES, CALIFORNIA

Ninyo & Moore
Geotechnical & Environmental Sciences Consultants

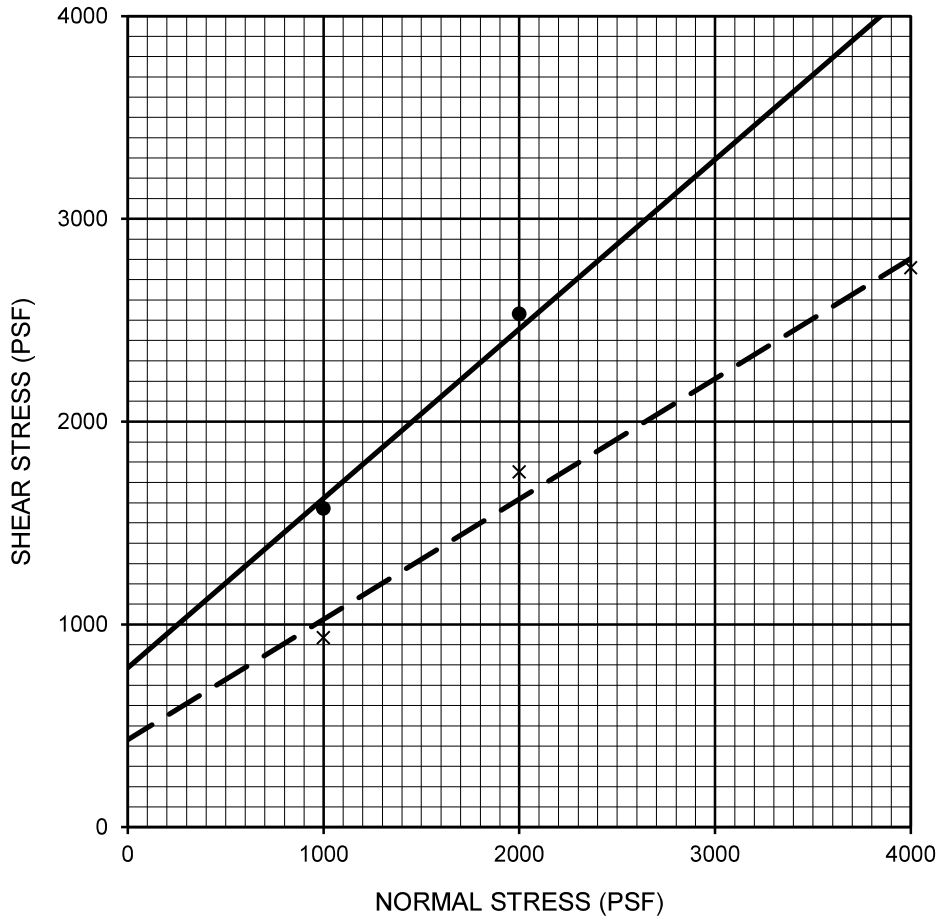

Description	Symbol	Sample Location	Depth (ft)	Shear Strength	Cohesion (psf)	Friction Angle (degrees)	Equivalent Soil Type
SILTSTONE	—●—	B-5	25.0-26.5	Peak	786	40	ML
SILTSTONE	– –X– –	B-5	25.0-26.5	Ultimate	432	31	ML

Sample Number	Normal Stress (psf)	Moisture Content (%)		Dry Density (pcf)	Degree of Saturation (%)	
		Before Test	After Test		Before Test	After Test
A	1,000	38.1	43.9	80.6	96	99.9
B	2,000	38.3	42.5	82.1	99.9	99.9
C	4,000	37.9	41.8	82.3	99.5	99.9

PERFORMED IN GENERAL ACCORDANCE WITH ASTM D 3080

FIGURE B-13

DIRECT SHEAR TEST RESULTS

MACARTHUR PARK LAKE PROJECT
LOS ANGELES, CALIFORNIA

Ninyo & Moore
Geotechnical & Environmental Sciences Consultants

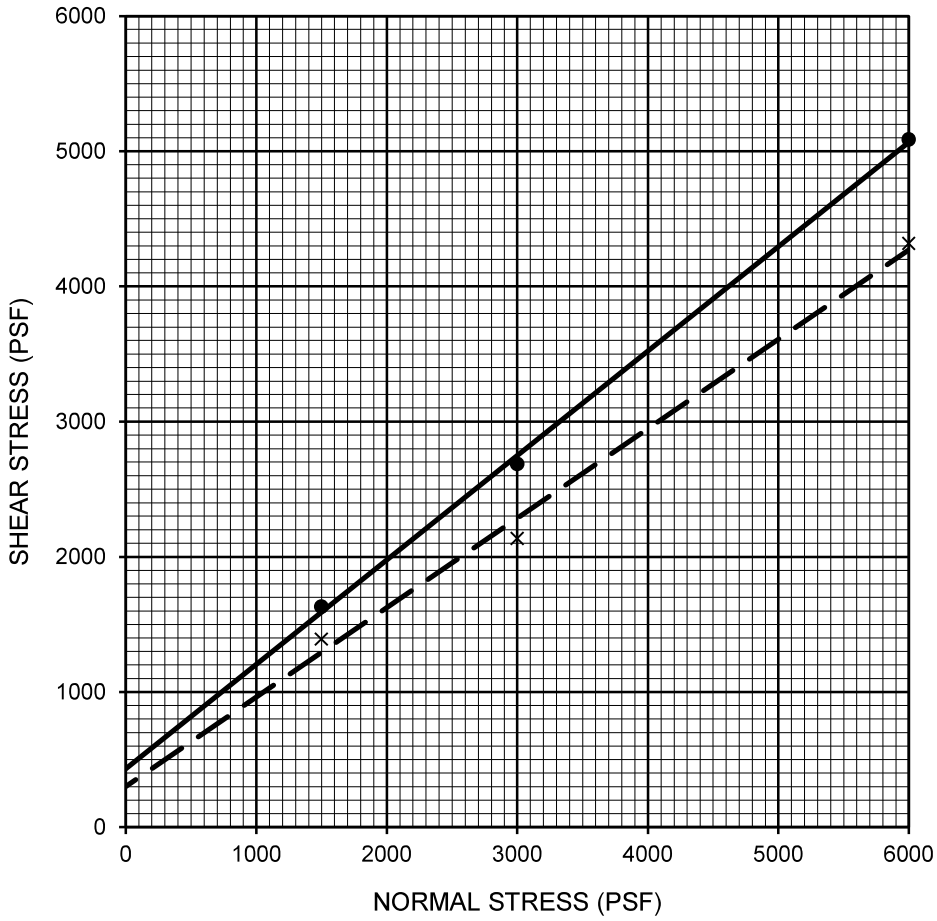

Description	Symbol	Sample Location	Depth (ft)	Shear Strength	Cohesion (psf)	Friction Angle (degrees)	Equivalent Soil Type
SILTSTONE	—●—	B-5	50.0-51.5	Peak	432	38	ML
SILTSTONE	– –X– –	B-5	50.0-51.5	Ultimate	300	33	ML

Sample Number	Normal Stress (psf)	Moisture Content (%)		Dry Density (pcf)	Degree of Saturation (%)	
		Before Test	After Test		Before Test	After Test
A	1,500	58.5	63.6	63.4	96.4	99.9
B	3,000	48.5	54.6	70.7	96	99.9
C	6,000	61	65.7	60.5	93.3	99.9

PERFORMED IN GENERAL ACCORDANCE WITH ASTM D 3080

FIGURE B-14

DIRECT SHEAR TEST RESULTS

MACARTHUR PARK LAKE PROJECT
LOS ANGELES, CALIFORNIA

Ninyo & Moore
Geotechnical & Environmental Sciences Consultants

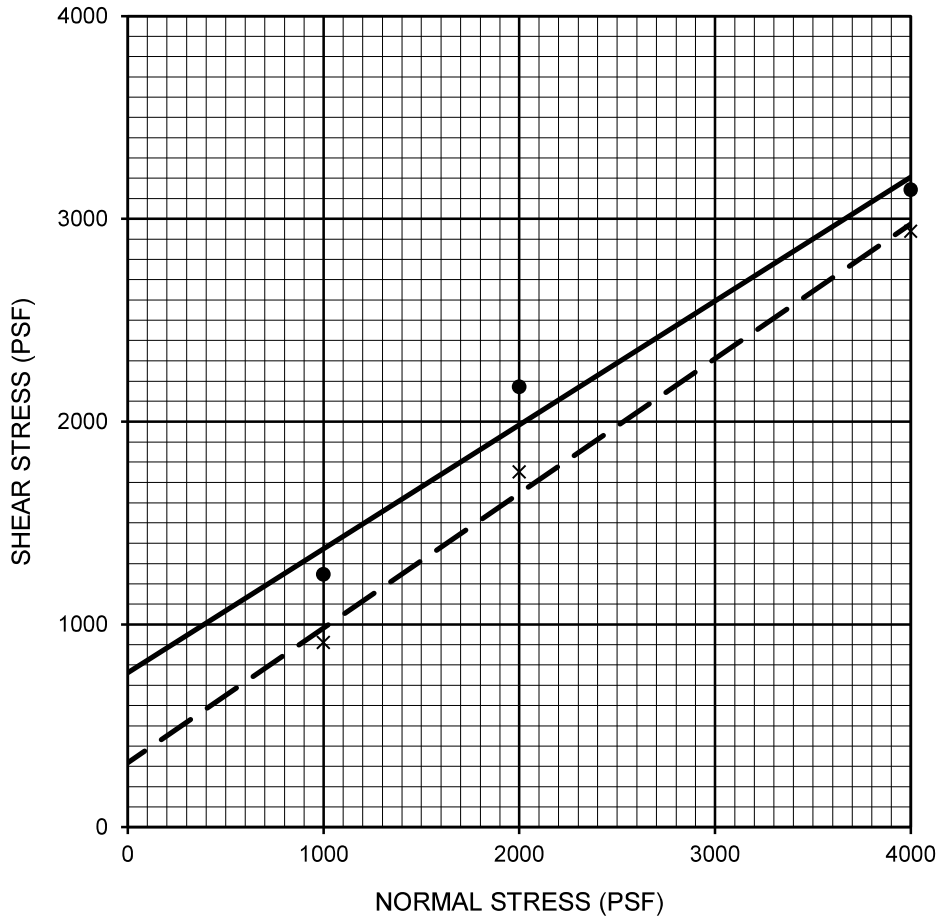

Description	Symbol	Sample Location	Depth (ft)	Shear Strength	Cohesion (psf)	Friction Angle (degrees)	Equivalent Soil Type
SILTSTONE	—●—	B-6	5.0-6.5	Peak	762	31	ML
SILTSTONE	– –X– –	B-6	5.0-6.5	Ultimate	318	34	ML

Sample Number	Normal Stress (psf)	Moisture Content (%)		Dry Density (pcf)	Degree of Saturation (%)	
		Before Test	After Test		Before Test	After Test
A	1,000	33.8	46.9	77.2	78.4	99.9
B	2,000	34.6	44.6	78.5	82.9	99.9
C	4,000	45.4	52.1	70.1	88.5	99.9

PERFORMED IN GENERAL ACCORDANCE WITH ASTM D 3080

FIGURE B-15

DIRECT SHEAR TEST RESULTS

MACARTHUR PARK LAKE PROJECT
LOS ANGELES, CALIFORNIA

Ninyo & Moore
Geotechnical & Environmental Sciences Consultants

SAMPLE LOCATION	SAMPLE DEPTH (ft)	INITIAL MOISTURE (percent)	COMPACTED DRY DENSITY (pcf)	FINAL MOISTURE (percent)	VOLUMETRIC SWELL (in)	EXPANSION INDEX	POTENTIAL EXPANSION
B-2	4.0-5.0	9.0	113.0	17.9	0.000	0	Very Low
B-3	1.5-5.0	10.0	110.8	17.8	0.015	15	Very Low
B-6	3.0-5.0	21.0	77.3	46.0	0.078	78	Medium
MW-1	3.0-5.0	11.0	104.1	25.7	0.035	35	Low

PERFORMED IN GENERAL ACCORDANCE WITH ☐ UBC STANDARD 18-2 ☑ ASTM D 4829

FIGURE B-16

Ninyo & Moore
Geotechnical & Environmental Sciences Consultants

EXPANSION INDEX TEST RESULTS

MACARTHUR PARK LAKE PROJECT
LOS ANGELES, CALIFORNIA

211019002 | 8/19

SAMPLE LOCATION	SAMPLE DEPTH (ft)	pH [1]	RESISTIVITY [1] (ohm-cm)	SULFATE CONTENT [2]		CHLORIDE CONTENT [3] (ppm)
				(ppm)	(%)	
B-3	1.5-5.0	7.3	775	240	0.024	230
B-6	3.0-5.0	7.5	775	3600	0.360	1680
HA-1	3.0-8.0	7.2	565	7200	0.720	190
HA-2	0.5-5.0	6.8	595	4800	0.480	50

[1] PERFORMED IN GENERAL ACCORDANCE WITH CALIFORNIA TEST METHOD 643
[2] PERFORMED IN GENERAL ACCORDANCE WITH CALIFORNIA TEST METHOD 417
[3] PERFORMED IN GENERAL ACCORDANCE WITH CALIFORNIA TEST METHOD 422

FIGURE B-17

CORROSIVITY TEST RESULTS

MACARTHUR PARK LAKE PROJECT
LOS ANGELES, CALIFORNIA

Ninyo & Moore
Geotechnical & Environmental Sciences Consultants

211019002 | 8/19

APPENDIX D

Previous Borings Logs by
Southern California Rapid Transit District, 1991

THIS BORING LOG IS BASED ON FIELD CLASSIFICATION AND VISUAL SOIL DESCRIPTION BUT IS MODIFIED TO INCLUDE RESULTS OF LABORATORY CLASSIFICATION TESTS WHEN AVAILABLE. THIS LOG IS APPLICABLE ONLY AT THIS LOCATION AND TIME. CONDITIONS MAY DIFFER AT OTHER LOCATIONS OR TIME

Converse Consultants, Inc.
Earth Sciences Associates
Geo/Resource Consultants

BORING LOG CEG 11

Proj: DESIGN UNIT A170 Date Drilled 1/29-31/81 Ground Elev. 271.0'
Drill Rig Failing 1500 Logged By S. Slaff Total Depth 201.1'
Hole Diameter 4 5/8" Hammer Weight & Fall 140 lbs @ 30"

DEPTH	USCS	MATERIAL CLASSIFICATION	SAMPLE	BLOWS/FT	SMALL WATER LOSS	REMARKS
0		0.0-0.1 ASPHALT 0.1-0.9 CONCRETE			AD	1-29-81
	ML	ALLUVIUM 0.9-20.9 CLAYEY SILT: mottled; light olive brown and light olive; trace fine sand; medium stiff; dry; sand is subangular; micaceous			RD	
			J-1	6 9 12	SS	1.5/1.5 recovery
					RD	
			J-2	7 12 22	SS	1.5/1.5 recovery
					RD	
	CL SS ML	14.5-20.9 SILTY CLAY: grayish olive green trace fine sand; stiff; dry to moist becoming banded and moist	J-3	10 14 21	SS	1.5/1.5 recovery
					RD	
			C-1	14 34	DR	1.0/1.0 recovery

Sheet 1 of 9

Project DESIGN UNIT A170 Date Drilled 1/29/81 Hole No. 11

DEPTH	USCS	MATERIAL CLASSIFICATION	SAMPLE	BLOWS/FT	SMALL WATER LOSS	REMARKS
20	ML	0.9-20.9 SILTY CLAY: cont.	J-4	14 24 36	SS	1.5/1.5 recovery
		PUENTE FORMATION 20.9-201.1 SILTSTONE: grayish olive green; trace sandstone; dry; micaceous Physical Condition: massive; soft to friable hardness; soft to friable strength; fresh			RD	
		gas odor; silty claystone	S-1			2.6/2.8 recovery
31			BOX 1			1.8/2.8 recovery
						29' groundwater level standard penetration >4.5 tons/ft²
		grading from thickly to thinly bedded				2.8/2.8 recovery
55						2.7/2.8 recovery
		gas odor decreasing				2.8/2.8 recovery
		grading from dry to moist	Box 2			2.4/2.8 recovery
52						
		interbedded siltstone, claystone and sandstone	S-2			2.0/2.8 recovery

Sheet 2 of 9

Project DESIGN UNIT A170 Date Drilled 1/29-30/81 Hole No. 11

DEPTH	USCS	MATERIAL CLASSIFICATION	SAMPLE	BLOWS/FT	SMALL WATER LOSS	REMARKS
44		20.9-201.1 SILTSTONE: cont.	S-2		PB	2.0/2.8 recovery
			Box 2			2.8/2.8 recovery
48		occasional interbedded uncemented sandstone. Sandstone beds are greenish gray, .25-1.5" thick				2.1/2.8 recovery
45			Box 3			2.8/2.8 recovery
58						
						2.8/2.8 recovery
		fine sandy siltstone	S-3			2.6/2.8 recovery
50			Box 4			2.2/2.8 recovery
						1-29-81
						1-30-81 groundwater at 6.1' at 7:00
						2.8/2.8 recovery
						2.8/2.8 recovery

Sheet 3 of 9

Project DESIGN UNIT A170 Date Drilled 1/30/81 Hole No. 11

DEPTH	USCS	MATERIAL CLASSIFICATION	SAMPLE	BLOWS/FT	SMALL WATER LOSS	REMARKS
68		20.9-201.1 SILTSTONE: cont.	Box 4		PB	2.8/2.8 recovery
70	58					
		scattered coarse sand-sized grains of wood	Box 5			2.7/2.8 recovery
72						2.7/2.8 recovery
74						
76		fine sandy siltstone	S-4			2.8/2.8 recovery
78						
			Box 5			2.8/2.8 recovery
80	47					
82			Box 6			2.8/2.8 recovery
84						2.8/2.8 recovery
86						
88			S-5			2.3/2.8 recovery
90	53					
			S-6			2.7/2.8 recovery
92						

Sheet 4 of 9

Project DESIGN UNIT A170 Date Drilled 1/30/81 Hole No. 11

DEPTH	USCS	MATERIAL CLASSIFICATION	SAMPLE	BLOWS/FT	SMALL WATER LOSS	REMARKS
92		20.9-201.1 SILTSTONE: cont.	S-6		PB	2.7/2.8 recovery
	51		Box 6			2.3/2.8 recovery
94						
		grading from thinly bedded to massive; decreasing proportion of sandstone beds	Box 7			2.8/2.8 recovery
98						2.7/2.8 recovery
100	45					2.6/2.8 recovery
102						
			Box 8			1.8/2.8 recovery
104	49					
106		sandy siltstone	S-7			2.8/2.8 recovery
108						
			Box 8			2.0/2.8 recovery
110						
	50					2.8/2.8 recovery
112						
114						
						2.8/2.8 recovery
116						

Sheet 5 of 9

Project DESIGN UNIT A170 Date Drilled 1-30-81 Hole No. 11

DEPTH	USCS	MATERIAL CLASSIFICATION	SAMPLE	BLOWS/FT	SMALL WATER LOSS	REMARKS
118		20.9-201.1 SILTSTONE: cont.	Box 8		PB	2.8/2.8 recovery
	48		Box 9			2.4/2.8 recovery
120						
		bedding more distinct				2.3/2.8 recovery
122						
			S-8			2.7/2.8 recovery
124						
			Box 9			1.9/2.8 recovery
126	51					
		sandstone beds are thicker than above - up to 2.5" thick				2.6/2.8 recovery
128						
130						
			Box 10			2.7/2.8 recovery
132	51					
134						2.1/2.8 recovery
136						
138	45					
			S-9			2.8/2.8 recovery
140						

Sheet 6 of 9

Project DESIGN UNIT A170 Date Drilled 1-30-81 Hole No. 11

DEPTH	USCS	MATERIAL CLASSIFICATION	SAMPLE	BLOWS/FT	SMALL WATER LOSS	REMARKS
140	49	20.9-201.1 SILTSTONE: cont.	S-9		PB	2.8/2.8 recovery
142			Box 10			2.7/2.8 recovery
144						
			Box 11			1.9/2.8 recovery
146						
148	51	147.1-147.6 SANDSTONE: dark greenish gray; very dense; moist; micaceous; friable				1.9/2.8 recovery
		147.6 return to siltstone with sandstone beds				
150						2.5/2.8 recovery
152						
154			Box 12			2.7/2.8 recovery
156			S-10			2.7/2.8 recovery
158						
160			Box 12			2.8/2.8 recovery
162	47					2.8/2.8 recovery
164			Box 13			

Sheet 7 of 9

Project DESIGN UNIT A170 Date Drilled 1/30-31/81 Hole No. 11

DEPTH	USCS	MATERIAL CLASSIFICATION	SAMPLE	BLOWS/FT	SMALL WATER LOSS	REMARKS
164		20.9-201.1 SILTSTONE: cont.	Box 13		PB	2.8/2.8 recovery
166	51					2.8/2.8 recovery
168						2.8/2.8 recovery
170						2.1/2.8 recovery
172	52					
174						2.7/2.8 recovery
176						
			S-11			2.6/2.8 recovery
178						1-30-81
			Box 14			1-31-81 2.6/2.8 recovery artesian water flow from hole
180	53					
182		interbedded sandstone is greenish gray; very dense; moist; micaceous; beds are .25"-.75" thick				2.7/2.8 recovery
184						2.8/2.8 recovery
			Box 15			
186	52					
			S-12			2.8/2.8 recovery
188						

Sheet 8 of 9

RECORD DRAWING

REV.	DATE	BY	SUB.	APP.	DESCRIPTION
1	8/20/81	DMM	21201	Gm	REVISIONS INDICATED ON AS-BUILT MARKUP RECEIVED 9-81
C	3/1/85	cm			INITIAL ISSUE

THE PREPARATION OF THIS DRAWING HAS BEEN FINANCED IN PART THROUGH A GRANT FROM THE U. S. DEPARTMENT OF TRANSPORTATION, URBAN MASS TRANSPORTATION ADMINISTRATION, UNDER THE URBAN MASS TRANSPORTATION ACT OF 1964, AS AMENDED, AND IN PART BY THE TAXES OF THE CITIZENS OF LOS ANGELES COUNTY AND OF THE STATE OF CALIFORNIA

DESIGNED BY
DRAWN BY DKM/JAP
CHECKED BY J.A. Doolittle
IN CHARGE T.C. Doolittle
DATE 12 MAR. 85

REGISTERED PROFESSIONAL ENGINEER JAMES A DOOLITTLE No 24662 CIVIL STATE OF CALIFORNIA

SOUTHERN CALIFORNIA RAPID TRANSIT DISTRICT
METRO RAIL PROJECT
RTD

CCI/ESA/GRC
General Geotechnical Consultants
SUBMITTED T.C. Doolittle

DMJM/PBQD/KE/HWA
A JOINT VENTURE
GENERAL CONSULTANTS
APPROVED Howard Shaliff

LA CBD TO NORTH HOLLYWOOD
WILSHIRE/ALVARADO LINE
BORING LOGS II

CONTRACT NO. A-171
DRAWING NO. S-010 REV. 1
SCALE NO SCALE
SHEET NO. 093

Project DESIGN UNIT A170 Date Drilled 1/31/81 Hole No. 11

DEPTH	USCS	MATERIAL CLASSIFICATION	SAMPLE	BLOWS/FT	DRILL MODE	REMARKS
188		20.9-201.1 SILTSTONE: cont.	S-12		PB	2.8/2.8 recovery
190			Box 15			2.6/2.8 recovery
192						2.8/2.8 recovery
194						
196						2.8/2.8 recovery
198			Box 16			
200			S-13			2.5/2.5 recovery
202		B.H. 201.1 Terminated hole.				Drilled with 200 psi hydraulic drawdown. Conducted downhole seismic testing. Collected water sample for analysis. Conducted gas analysis with chromatograph. Water sampled 2/7/81.
204						
206						
208						
210						
212						

Sheet 9 of 9

THIS BORING LOG IS BASED ON FIELD CLASSIFICATION AND VISUAL SOIL DESCRIPTION BUT IS MODIFIED TO INCLUDE RESULTS OF LABORATORY CLASSIFICATION TESTS WHERE AVAILABLE. THIS LOG IS APPLICABLE ONLY AT THIS LOCATION AND TIME. CONDITIONS MAY DIFFER AT OTHER LOCATIONS OR TIME.

Converse Consultants, Inc.
Earth Sciences Associates
Geo/Resource Consultants

BORING LOG 11A

Proj: DESIGN UNIT A170 Date Drilled 11-30-83 Ground Elev. 290'

Drill Rig BUCKET Logged By J. Stellar Total Depth 90'

Hole Diameter 33" Hammer Weight & Fall

DEPTH	USCS	MATERIAL CLASSIFICATION	SAMPLE	BLOWS/FT	DRILL MODE	REMARKS
0	AC/AF	0.0-0.4 0.4-0.8 CONCRETE 0.4-3.0 FILL Mixed silty sand and clayey sand with gravel to 1"; tan to orange brown; moist; soft to medium dense				Hole stands very well 0-90' No gas registered on monitor
2						
4	SW	ALLUVIUM 3.0-7.0 GRAVELLY SAND: light greenish grey to tan; slightly moist; medium dense to dense; cobbles to 12"				
6						
8		BEDROCK-PUENTE FORMATION: 7.0-90.0 SILTSTONE: light orange brown to tan; slightly moist; closely fractured; friable hardness; weak strength; deep to moderate weathering; deep and thorough discoloration				
10						
12						
14						
16						
18						
20						

Sheet 1 of 4

Project DESIGN UNIT A170 Date Drilled 11-30-83 Hole No. 11A

DEPTH	USCS	MATERIAL CLASSIFICATION	SAMPLE	BLOWS/FT	DRILL MODE	REMARKS
20		7.0-90.0 BEDROCK-PUENTE FORMATION SILTSTONE: (Cont.) 21.0 becomes blue gray; moderately hard and moderately strong				
22						
24						
26						
28		29-30' shear zone; deep weathering & discoloration; friable hardness and strength				28' groundwater level
30						
32						
34						
36						
38						
40						
42						
44						

Sheet 2 of 4

Project DESIGN UNIT A170 Date Drilled 11-30-83 Hole No. 11A

DEPTH	USCS	MATERIAL CLASSIFICATION	SAMPLE	BLOWS/FT	DRILL MODE	REMARKS
44		7.0-90.0 BEDROCK-PUENTE FORMATION SILTSTONE: (cont.)				
46						
48		3-4" layers of hard; strong silicious siltstone 49-50'				
50						
52						
54						
56						
58						
60						
62						
64						
66						
68						

Sheet 3 of 4

Project DESIGN UNIT A170 Date Drilled 11-30-83 Hole No. 11A

DEPTH	USCS	MATERIAL CLASSIFICATION	SAMPLE	BLOWS/FT	DRILL MODE	REMARKS
68		7.0-90.0 BEDROCK-PUENTE FORMATION SILTSTONE: (conc.)				
70						
72						
74						
76						
78						
80						
82						
84						
86						
88						
90		B.H. 90.0 Terminated Hole				case top 20'
92						

Sheet 4 of 4

RECORD DRAWING

REV.	DATE	BY	SUB.	APP.	DESCRIPTION
1	9-20-91	JDA	EFM	GML	AS-BUILT RECEIVED 9-91
0	3/11/85	CM			INITIAL ISSUE

THE PREPARATION OF THIS DRAWING HAS BEEN FINANCED IN PART THROUGH A GRANT FROM THE U. S. DEPARTMENT OF TRANSPORTATION, URBAN MASS TRANSPORTATION ADMINISTRATION, UNDER THE URBAN MASS TRANSPORTATION ACT OF 1964, AS AMENDED, AND IN PART BY THE TAXES OF THE CITIZENS OF LOS ANGELES COUNTY AND OF THE STATE OF CALIFORNIA

DESIGNED BY
DRAWN BY DKM/JAP
CHECKED BY J.A. Doolittle
IN CHARGE
DATE 12 MAR 85

SOUTHERN CALIFORNIA RAPID TRANSIT DISTRICT
METRO RAIL PROJECT
RTD

CCI/ESA/GRC
General Geotechnical Consultants
SUBMITTED

DMJM/PBQD/KE/HWA
A JOINT VENTURE
GENERAL CONSULTANTS
APPROVED

LA CBD TO NORTH HOLLYWOOD
WILSHIRE/ALVARADO LINE
BORING LOGS 11 & 11A

CONTRACT NO. A-171
DRAWING NO. S-115
REV. 1
SCALE NO SCALE
SHEET NO. 094

THE BORING LOG IS BASED ON FIELD CLASSIFICATION AND VISUAL SOIL DESCRIPTION, BUT IS ADDRESSED TO INCLUDE RESULTS OF LABORATORY CLASSIFICATION TESTS WHERE AVAILABLE. THIS LOG IS APPLICABLE ONLY AT THE LOCATION AND TIME CONDITIONS MAY DIFFER AT OTHER LOCATIONS OR TIME

Converse Consultants, Inc.
Earth Sciences Associates
Geo/Resource Consultants

BORING LOG 11-1

Proj: Design Unit Date Drilled 2/8-9/83 Ground Elev. _____
Drill Rig: Mobile Logged By: L. Schoenherr Total Depth: 75.0'
Hole Diameter: 8 1/2" Hammer Weight & Fall: 140 lb @ 30"

DEPTH	USCS	MATERIAL CLASSIFICATION	SAMPLE	BLOWS/6"	REC	REMARKS
0	AC	0.0-0.4 Asphalt 0.4-1.0 Concrete			6B	2-8-83
2	CL	ALLUVIUM 1.0-8.5 SILTY CLAY: mottled moderate yellowish brown and dark yellowish brown; trace fine sand; stiff; moist			6B	
4			J-1	2 1 1	55	0.5/1.5 recovery
6					6B	
8		8.5-11.5 PUENTE FORMATION: CLAYEY SILTSTONE: interbedded with SILTY SANDSTONE; mottled grayish gray and moderate brown; moist; contains conveyed sandstone zones, moderate weathering	J-2	8 6 11	55	0.7/1.5 recovery
10		11.5-39.0 CLAYEY SILTSTONE with INTERBEDS OF SANDSTONE AND CLAYSTONE: sandstone is medium grayish gray; siltstone is dark grayish gray; claystone is olive black; sulfur odor present in clay with minor small wood fragments; calcite bedded 1/8" to 1/4"	C-1	6 11 19	100 6B	1.5/1.5 recovery
12					6B	mineral circulation lost
14			J-3	8 11 12	55	1.5/1.5 recovery
16		PHYSICAL CONDITION: Friable fracturing to massive; soft to friable hardness; plastic to friable strength; fresh to friable weathered			6B	
18						
20						Sheet 1 of 4

THE BORING LOG IS BASED ON FIELD CLASSIFICATION AND VISUAL SOIL DESCRIPTION, BUT IS ADDRESSED TO INCLUDE RESULTS OF LABORATORY CLASSIFICATION TESTS WHERE AVAILABLE. THIS LOG IS APPLICABLE ONLY AT THE LOCATION AND TIME CONDITIONS MAY DIFFER AT OTHER LOCATIONS OR TIME

Converse Consultants, Inc.
Earth Sciences Associates
Geo/Resource Consultants

BORING LOG 11-2

Proj: Design Unit A170 Date Drilled 2/9-10/83 Ground Elev. 264.5'
Drill Rig: Failing 1500 Logged By: L. Schoenherr Total Depth: 75'
Hole Diameter: 8 1/2" Hammer Weight & Fall: 140lb @ 30"

DEPTH	USCS	MATERIAL CLASSIFICATION	SAMPLE	BLOWS/6"	REC	REMARKS
0	AC	0.0-0.3 Asphalt 0.3-0.5 Concrete			6B	2-9-83
2	CL	ALLUVIUM 0.5-6.0 CLAYEY SAND: mottled moderate yellowish brown & light brown; sand is fine grained with crops coarse grains; loose; moist to wet			6B	
4			J-1	1 4 1	55	1.0/1.5 recovery
6	CL	6.0-7.5 SANDY CLAY: olive black; medium to fine sand; firm to stiff; moist			6B	
8	CL	7.5-25.0 SILTY CLAY: olive black; trace medium rounded gravel; stiff; moist			6B	
10			C-1		6B 6B	1.0/1.0 recovery
12			J-2	3 4 5	55	1.5/1.5 recovery
14					6B	
16			J-3	4 5 6	55	1.5/1.5 recovery
18					6B	
20					6B	pocket penetrometer 2.0 tsf Sheet 1 of 4

Project: Design Unit Date Drilled 2/8-9/83 Hole No. 11-1

DEPTH	USCS	MATERIAL CLASSIFICATION	SAMPLE	BLOWS/6"	REC	REMARKS
30		11.5-39.0 INTERBEDDED SILTSTONE, SANDSTONE AND CLAYSTONE: (cont)	PB-1		PB	2.5/2.5 recovery
32			J-4	13 18 25	55 6B	1.5/1.5 recovery
34						
36		27.0-29.0 grading from thinly to thickly bedded 1" to 24"	J-5	20 36 43	55 6B	1.5/1.5 recovery
38			C-7	28 50	0B 6B	1.0/1.0 recovery
40			J-6	18 28 44	55 6B	1.5/1.5 recovery
42		sandstone decreasing				
44			J-7	28 44 50	55 6B	1.3/1.3 recovery
46		39.0-57.6 CLAYEY SILTSTONE: olive black; occasional thin irregular very fine sandstone pockets PHYSICAL CONDITION: Friable to massive fracturing; soft to friable hardness; plastic to friable strength; fresh to friable weathering	PB-2		PB	2.5/2.5 recovery
48			J-8	15 30 50	55 6B	1.3/1.3 recovery Sheet 2 of 4

Project: Design Unit Date Drilled 2/8-9/83 Hole No. 11-1

DEPTH	USCS	MATERIAL CLASSIFICATION	SAMPLE	BLOWS/6"	REC	REMARKS
44		29.0-57.6 CLAYEY SILTSTONE: (cont)			6B	
46			J-9	23 38 42	55	1.4/1.4 recovery
48					6B	
50			C-3	30 53	3M 6B	1.0/1.0 recovery
52			J-10	17 35 50	55 6B	1.4/1.4 recovery
54						
56		57.6-62.0 CLAYSTONE: greenish olive; moist PHYSICAL CONDITION: Friable fracturing to massive; soft to friable hardness; plastic to friable strength; fresh	J-11	17 52	55 6B	1.0/1.0 recovery
58			PB-2		PB	2.5/2.5 recovery
60		62.0-75.0 INTERBEDDED SILTSTONE, CLAYSTONE AND SANDSTONE: greenish olive; 5" interbeds PHYSICAL CONDITION: Friable fracturing to massive soft to friable hardness; plastic to friable strength; fresh; parts v. easily along sandstone beds	C-12	24 50	55 6B	1.0/1.0 recovery
62						
64						
66						
68			J-13	24 46	55 6B	1.3/1.3 recovery Sheet 3 of 4

Project: Design Unit A170 Date Drilled 2/9-10/83 Hole No. 11-2

DEPTH	USCS	MATERIAL CLASSIFICATION	SAMPLE	BLOWS/6"	REC	REMARKS
20	CL	7.5-25.0 SILTY CLAY: (cont)			6B	
22			J-4	3 3 3	55	1.5/1.5 recovery
24		25.5-25.8 gravel lens			6B	
26	CL	25.8-28.0 CLAYEY SAND: grayish olive green; fine sand; medium dense; moist				rig chatter
28			J-5	3 5 10	55 6B	1.5/1.5 recovery
30		PUENTE FORMATION 28.0-75.0 CLAYEY SILTSTONE: dark greenish gray interbedded with fine SANDSTONE; interbeds from 1/8" to 6"	C-13		0B 6B	0.8/1.0 recovery pocket penetrometer 3.5 tsf
32		PHYSICAL CONDITION: massive to friable fracturing; friable hardness and strength; fresh.	J-6	7 8 22	55 6B	1.5/1.5 recovery
34		black sandstone interbeds strong sulfur odor				
36		34.0 sandstone lensof decreasing				
38		color change to olive gray	J-7	21 27 33	55 6B	1.3/1.3 recovery
40			PB-1		PB	2.5/2.5 recovery
42		minor sub rounded gravels	J-8	23 25 50	55 6B	1.4/1.4 recovery refusal at 16"
44						Sheet 2 of 4

Project: Design Unit A170 Date Drilled 2/9-10/83 Hole No. 11-2

DEPTH	USCS	MATERIAL CLASSIFICATION	SAMPLE	BLOWS/6"	REC	REMARKS
40		28.0-75.0 CLAYEY SILTSTONE INTERBEDDED SANDSTONE			6B	
42		42.0' 2" cemented zone concretion	J-9	9 33 50	55 6B	1.3/1.3 recovery refusal at 16"
44						
46		2" concretions	C-4		3M 6B	1.0/1.0 recovery
48			J-10	19 29 46	55 6B	1.5/1.5 recovery
50						
52		thin interbedded sandstone lenses to 1½"	J-11	25 47 50	55 6B	1.3/1.3 recovery refusal at 16"
54			PB-2		PB	2.5/2.5 recovery
56			J-12	23 29 50	55 6B	1.4/1.4 recovery refusal at 16"
58						
60			J-13	33 29 50	55 6B	1.4/1.4 recovery refusal at 16" Sheet 3 of 4

Project: Design Unit A170 Date Drilled 2/8-9/83 Hole No. 11-1

DEPTH	USCS	MATERIAL CLASSIFICATION	SAMPLE	BLOWS/6"	REC	REMARKS
68		67.0-75.0 INTERBEDDED SILTSTONE, CLAYSTONE AND SANDSTONE: (cont)			3M	
70			C-8	29 47	6B	1.0/1.0 recovery
72			J-14	21 35 52	55 6B	
74		B.H. 75.0' Terminated Hole				2-9-83 Groundwater at 8' Jam Pitcher samples cut with 300 psi; installed 75' of 2" ABS slotted 25'-75'; 1" bentonite seal 24'-31" overburden wrapped with filter fabric.
76						
78						
80						
82						Sheet 4 of 4

Project: Design Unit A170 Date Drilled 2/9-10/83 Hole No. 11-2

DEPTH	USCS	MATERIAL CLASSIFICATION	SAMPLE	BLOWS/6"	REC	REMARKS
68		28.0-75.0 SILTSTONE, INTERBEDDED WITH SANDSTONE: (cont)			6B	
70			C-5	20 50	0B 6B	1.0/1.0 recovery 2-9-83 2-10-83 Groundwater at 5' at 7a.m.
72		71'-75' thin interbeds (4") of sandstone, siltstone, and claystone; greenish gray to olive black	J-14	14 31 50	55 6B	1.3/1.3 recovery refusal at 16"
74		B.H. 75.0' Terminate Hole				Pitcher samples cut with 200 psi; grouted to 6' below surface topped off with cold patch asphalt compacted in 1" lifts.
76						
78						
80						
82						Sheet 4 of 4

RECORD DRAWING

REV.	DATE	BY	SUB.	APP.	DESCRIPTION
1	12-9	CHH	FAB	[illegible]	10 REVISIONS INDICATED ON SHT 2 OF THIS DRAWING RECEIVED 11-91
0	Init				INITIAL ISSUE

THE PREPARATION OF THIS DRAWING HAS BEEN FINANCED IN PART THROUGH A GRANT FROM THE U. S. DEPARTMENT OF TRANSPORTATION, URBAN MASS TRANSPORTATION ADMINISTRATION, UNDER THE URBAN MASS TRANSPORTATION ACT OF 1964, AS AMENDED, AND IN PART BY THE TAXES OF THE CITIZENS OF LOS ANGELES COUNTY AND OF THE STATE OF CALIFORNIA

DESIGNED BY
DRAWN BY DRM/JAP
CHECKED BY T.A. Doolittle
QA CHECK [illegible]
DATE 12 MAR 85

SOUTHERN CALIFORNIA RAPID TRANSIT DISTRICT
METRO RAIL PROJECT
RTD

CCI/ESA/GRC
General Geotechnical Consultants
SUBMITTED [illegible]

DMJM/PBQD/KE/HWA
A JOINT VENTURE
GENERAL CONSULTANTS
APPROVED Howard Schaff

LA CBD TO NORTH HOLLYWOOD
WILSHIRE/ALVARADO LINE
BORING LOGS 11-1 & 11-2

CONTRACT NO. A-171
DRAWING NO. S-116 REV. 1
SCALE NO SCALE
SHEET NO. 095

THIS BORING LOG IS BASED ON FIELD CLASSIFICATION AND VISUAL SOIL DESCRIPTION; BUT IS MODIFIED TO INCLUDE RESULTS OF LABORATORY CLASSIFICATION TESTS WHERE AVAILABLE. THIS LOG IS APPLICABLE ONLY AT THIS LOCATION AND TIME. CONDITIONS MAY DIFFER AT OTHER LOCATIONS OR TIME

Converse Consultants, Inc.
Earth Sciences Associates
Geo/Resource Consultants

BORING LOG 11-7

Proj: DESIGN UNIT A 170 Date Drilled 1/13-14/84 Ground Elev. 252.4
Drill Rig FAILING 250 Logged By D. Gillette Total Depth 62.5'
Hole Diameter 4" Hammer Weight & Fall 300 lb. @ 15"

DEPTH	USCS	MATERIAL CLASSIFICATION	SAMPLE	BLOWS/FT	DRILL MODE	REMARKS
0	AF	0.0-5.0 ARTIFICIAL FILL			A	
2						
4		4.5-5.0 asphalt				
6	AC	5.0-10.0 SILTY CLAY: dusky brown; plastic; trace fine sand; firm to stiff; very moist; organic odor	PB1		PB	
8			C-1	8	DR	
10	SC	10.0-15.0 SANDY CLAY: greyish orange; very moist	PB2		PB	
12			C-2	15	DR	
14		15.0-62.5 BEDROCK-PUENTE FORMATION CLAYEY SILTSTONE interbedded with SILTY SANDSTONE: light brown and medium grey; moist; beds are 1/8" to 1/2"			RD	
16	SP		PB3		PB	
18			C-3	18	DR	
20					RD	

Sheet 1 of 3

Project DESIGN UNIT A170 Date Drilled 1-14-84 Hole No. 11-8

DEPTH	USCS	MATERIAL CLASSIFICATION	SAMPLE	BLOWS/FT	DRILL MODE	REMARKS
20	SP	18.5-21.5 SAND AND GRAVEL: (conc.)				
22		21.5-55.5 BEDROCK-PUENTE FORMATION CLAYEY SILTSTONE interbedded with SILTY SANDSTONE: olive grey and ducky yellowish brown	PB4		PB	1.5/2.5 recovery
24			C-4	100	DR	
26					RD	
28			PB5		PB	2.0/2.5 recovery
30			C-5	100K	DR	
32					RD	
34			PB6		PB	1.5/2.0 recovery
36					RD	
38			PB7		PB	2.3/2.5 recovery
40			C-6	100	DR	
42					RD	
44			PB8		PB	2.3/2.5 recovery

Sheet 2 of 3

Project DESIGN UNIT A170 Date Drilled 1-14-84 Hole No. 11-8

DEPTH	USCS	MATERIAL CLASSIFICATION	SAMPLE	BLOWS/FT	DRILL MODE	REMARKS
44		BEDROCK-PUENTE FORMATION 21.5-55.0 INTERBEDDED CLAYEY SILTSTONE AND SILTY SANDSTONE:	PB8		PB	
46			C-7	100K	DR	
48					RD	
50			PB9		PB	2.5/2.5 recovery
52			C-8	100K	DR	
54					RD	
56			PB10		PB	2.5/2.5 recovery
58		B.H. 55.5' Terminated Hole				
60						
62						
64						
66						
68						

Sheet 3 of 3

Project DESIGN UNIT A170 Date Drilled 1/13-14/84 Hole No. 11-7

DEPTH	USCS	MATERIAL CLASSIFICATION	SAMPLE	BLOWS/FT	DRILL MODE	REMARKS
20	TP	15.0-62.5 BEDROCK-PUENTE FORMATION: (cont.) 21.0 olive grey and dusky yellowish brown			RD	
22			PB 4		PB	1.9/2.5 recovery
24		Physical Condition: little fractured to massive plastic to friable strength; fresh to little weathered	C-4	78	DR	
26					PB	
28		poorly consolidated silty claystone with interbeds of laminated silty sandstone and siltstone - laminated layers appear "varved" with slight organic odor	PB5		PB	2.0/2.5 recovery
30			C-5	103	DR	
32					RD	
34			PB6		PB	2.0/2.5 recovery
36			C-6	78	DR	
38					RD	
40			PB7		PB	2.3/2.5 recovery
42		41.0 laminated sandstone & silty claystone	C-7	87	DR	
44					RD	
			PB		PB	

Sheet 2 of 3

Project DESIGN UNIT A170 Date Drilled 1/13-14/84 Hole No. 11-7

DEPTH	USCS	MATERIAL CLASSIFICATION	SAMPLE	BLOWS/FT	DRILL MODE	REMARKS
44	TP	15.0-62.5 BEDROCK-PUENTE FORMATION: (cont.)	PB8		PB	2.3/2.5 recovery
46			C-8	83	DR	1-13-84
48					RD	1-14-84
50			PB9		PB	2.1/2.5 recovery
52		51.0 silty sandstone and claystone with well defined bedding planes	C-9	100K	DR	
54					RD	
56			PB10		PB	2.1/2.5 recovery
58			C-10	100	DR	
60					RD	
62			PB11		PB	2.0/2.5 recovery
64		B.H. 62.5' Terminated Hole				
66						
68						

Sheet 3 of 3

THIS BORING LOG IS BASED ON FIELD CLASSIFICATION AND VISUAL SOIL DESCRIPTION; BUT IS MODIFIED TO INCLUDE RESULTS OF LABORATORY CLASSIFICATION TESTS WHERE AVAILABLE. THIS LOG IS APPLICABLE ONLY AT THIS LOCATION AND TIME. CONDITIONS MAY DIFFER AT OTHER LOCATIONS OR TIME

Converse Consultants, Inc.
Earth Sciences Associates
Geo/Resource Consultants

BORING LOG 11-8

Proj: DESIGN UNIT A 170 Date Drilled 1-14-84 Ground Elev. 252.5'
Drill Rig FAILING 250 Logged By D. Gillette Total Depth 55.5'
Hole Diameter 4" Hammer Weight & Fall 140 lbs @ 30"

DEPTH	USCS	MATERIAL CLASSIFICATION	SAMPLE	BLOWS/FT	DRILL MODE	REMARKS
0	AF	0.0-4.0 ARTIFICIAL FILL SILTY AND SILTY CLAY: dark yellowish orange			AD	
2			C-1	4	DR	
4	CL	ALLUVIUM 4.0-10.0 CLAY: greyish brown; contains trace of sand			RD	
6			PB1		PB	2.5/2.5 recovery
8			C-7	8	DR	
10	SC	10.0-18.5 SANDY CLAY: greyish black			RD	
12			PB2		PB	2.5/2.5 recovery
14		greyish orange; cemented sand nodules	C-3	15	DR	
16					RD	
18			PB3		PB	2.5/2.5 recovery
20	SP	18.5-21.5 SAND AND GRAVEL: dark greenish grey		100	DR	
					RD	

Sheet 1 of 3

RECORD DRAWING

REV.	DATE	BY	SUB.	APP.	DESCRIPTION
1	9-20-11	SMM	ODA	GMH	NO REVISIONS INDICATED ON CHIS AS-BUILT MARKUPS RECEIVED 9-91
0	3/16/85	cm			INITIAL ISSUE

THE PREPARATION OF THIS DRAWING HAS BEEN FINANCED IN PART THROUGH A GRANT FROM THE U. S. DEPARTMENT OF TRANSPORTATION, URBAN MASS TRANSPORTATION ADMINISTRATION, UNDER THE URBAN MASS TRANSPORTATION ACT OF 1964, AS AMENDED, AND IN PART BY THE TAXES OF THE CITIZENS OF LOS ANGELES COUNTY AND OF THE STATE OF CALIFORNIA

DESIGNED BY
DRAWN BY DRM/JAP
CHECKED BY J.A. Doolittle
IN CHARGE T.K. Griffiths
DATE 12 MAR. 85

REGISTERED PROFESSIONAL ENGINEER JAMES A. DOOLITTLE No 24662 CIVIL STATE OF CALIFORNIA

SOUTHERN CALIFORNIA RAPID TRANSIT DISTRICT
METRO RAIL PROJECT
RTD

CCI/ESA/GRC
General Geotechnical Consultants
SUBMITTED T.K. Griffiths

DMJM/PBQD/KE/HWA
A JOINT VENTURE
GENERAL CONSULTANTS
APPROVED Leonard Caudill

LA CBD TO NORTH HOLLYWOOD
WILSHIRE/ALVARADO LINE

BORING LOGS 11-7 & 11-8

CONTRACT NO. A-171
DRAWING NO. S-119
REV. 1
SCALE NO SCALE
SHEET NO. 098

THIS BORING LOG IS BASED ON FIELD CLASSIFICATION AND VISUAL SOIL DESCRIPTION, BUT IS MODIFIED TO INCLUDE RESULTS OF LABORATORY CLASSIFICATION TESTS WHERE AVAILABLE. THIS LOG IS APPLICABLE ONLY AT THIS LOCATION AND TIME. CONDITIONS MAY DIFFER AT OTHER LOCATIONS OR TIME.

Converse Consultants, Inc.
Earth Sciences Associates
Geo/Resource Consultants

BORING LOG 11-9

Proj: DESIGN UNIT A170 Date Drilled 1-16-84 Ground Elev. 246.2'
Drill Rig FAILING 250 Logged By Dan Gillette Total Depth 54.0'
Hole Diameter 4" Hammer Weight & Fall 300 lbs @ 15-20"

DEPTH	USCS	MATERIAL CLASSIFICATION	SAMPLE	BLOWS/FT	DRILL MODE	REMARKS
0	CH/CH	0.0-11.0 SILTY CLAY: brownish black; wet; slightly organic			RD	
			C-1	8	DR	
4	CH	4.0 dusky brown; very moist; firm			RD	
			PB1		PB	2.5/2.5 recovery
			C-2	12	DR	
8					RD	
10		11.0-54.0 BEDROCK-PUENTE FORMATION CLAYEY SANDSTONE INTERBEDDED WITH CLAYEY SILTSTONE: dark yellowish brown; moist to very moist	PB2		PB	2.5/2.5 recovery
12			C-3	22	DR	
					RD	
14		Physical Condition: little fracturing to massive; soft to friable hardness; plastic to friable strength; fresh to little weathered				
16			PB3		PB	2.5/2.5 recovery
			C-4	89	DR	
18					RD	
20		29.0 greyish olive; moist				Sheet 1 of 3

Project DESIGN UNIT A170 Date Drilled 1-16-84 Hole No. 11-9

DEPTH	USCS	MATERIAL CLASSIFICATION	SAMPLE	BLOWS/FT	DRILL MODE	REMARKS
20		11.0-54.0 PUENTE FORMATION (cont.) CLAYEY SANDSTONE interbedded with CLAYEY SILTSTONE			RD	
			PB4		PB	1.2/2.5 recovery
22						
24	50"	Interbedded clayey sandstone and clayey siltstone; beds ½ to 1" well defined; moist	C-5	78	DR	
					RD	
26			PB5		PB	2.5/2.5 recovery
28			C-6	100/6"	DR	
					RD	
30			PB6		PB	2.5/2.5 recovery
32			C-7	100	RD	
34					RD	
36		38.0-46.0 silty sandstone; moderately hard - moist				2.5/2.5 recovery
			PB 7		PB	
38	50"		C-8	89	DR	
40					RD	
42			PB8		PB	2.5/2.5 recovery
44						Sheet 2 of 3

Project DESIGN UNIT A170 Date Drilled 1-16-84 Hole No. 11-9

DEPTH	USCS	MATERIAL CLASSIFICATION	SAMPLE	BLOWS/FT	DRILL MODE	REMARKS
44	TP	11.0-54.0 PUENTE FORMATION SILTY SANDSTONE interbedded with CLAYEY SILTSTONE	PB8		PB	
46	50"		C-9	100	DR	
48			PB 9		PB	2.5/2.5 recovery
50			PB10		PB	2.5/2.5 recovery
52			C-10	100		
54	B.H	54.0' Terminated Hole				
56						
58						
60						
62						
64						
66						
68						Sheet 3 of 3

THIS BORING LOG IS BASED ON FIELD CLASSIFICATION AND VISUAL SOIL DESCRIPTION, BUT IS MODIFIED TO INCLUDE RESULTS OF LABORATORY CLASSIFICATION TESTS WHERE AVAILABLE. THIS LOG IS APPLICABLE ONLY AT THIS LOCATION AND TIME. CONDITIONS MAY DIFFER AT OTHER LOCATIONS OR TIME.

Converse Consultants, Inc.
Earth Sciences Associates
Geo/Resource Consultants

BORING LOG 11-10

Proj: DESIGN UNIT A170 Date Drilled 1-17-84 Ground Elev. 248.1
Drill Rig FAILING 250 Logged By D. Gillette Total Depth 60.0'
Hole Diameter 4" Hammer Weight & Fall 300 lbs @ 15-20"

DEPTH	USCS	MATERIAL CLASSIFICATION	SAMPLE	BLOWS/FT	DRILL MODE	REMARKS
0	CH/OH	0.0-10.0 SILTY CLAY: Greyish brown; wet; soft			RD	
			C-1	2	DR	
4					RD	
			PB 1		PB	2.5/2.5 recovery
6			C-2	5	DR	
8	CH	7.0 light brown; firm; very moist			RD	
10		BEDROCK-PUENTE FORMATION 10.0-60.0 CLAYEY SILTSTONE interbedded with SILTY SANDSTONE: mottled greenish grey and moderate brown; moist; moderately hard; slightly weathered	PB 2		PB	2.5/2.5 recovery
12			C-13	18	DR	
					RD	
14		PHYSICAL CONDITION: little fractured to massive; soft to friable hardness; plastic to friable strength				
16			PB 3		PB	2.5/2.5 recovery
18			C-14	30	DR	
					RD	
20						Sheet 1 of 3

Project DESIGN UNIT A170 Date Drilled 1-17-84 Hole No. 11-10

DEPTH	USCS	MATERIAL CLASSIFICATION	SAMPLE	BLOWS/FT	DRILL MODE	REMARKS
20		10.0-60.0 PUENTE FORMATION CLAYEY SILTSTONE interbedded with SILTY SANDSTONE: (cont.)			RD	
			PB4		PB	2.5/2.5 recovery
22						
24	50"		C-5	95	DR	
		laminated beds of SANDSTONE SILTY SANDSTONE and CLAYEY SILTSTONE: beds ½ to 1", moderate brown; slightly organic			RD	
26			PB5		PB	2.5/2.5 recovery
28			C-6	108	DR	
					RD	
30						
32			PB6		PB	2.5/2.5 recovery
34			C-7	100	DR	
					RD	
36						
38			PB7		PB	2.5/2.5 recovery
40			C-8	100	DR	
					RD	
42						
44			PB8		PB	2.5/2.5 recovery
						Sheet 2 of 3

Project DESIGN UNIT A170 Date Drilled 1-17-84 Hole No. 11-10

DEPTH	USCS	MATERIAL CLASSIFICATION	SAMPLE	BLOWS/FT	DRILL MODE	REMARKS
44		10.0-60.0 PUENTE FORMATION CLAYEY SILTSTONE interbedded with SANDSTONE and CLAYEY SILTSTONE	PB8		PB	
46	50"		C-9	100/6"	DR	
					RD	
48			PB9		PB	2.5/2.5 recovery
50					RD	
52						
54						
56						
58			PB10		PB	2.5/2.5 recovery
60	B.H	60.0' Terminated Hole				
62						
64						
66						
68						Sheet 1 of 1

RECORD DRAWING

REV.	DATE	BY	SUB.	APP.	DESCRIPTION
1	9/30/91	SHM	PDR	GWL	NO REVISIONS INDICATED ON CMTS AS-BUILT MARKUPS RECEIVED 9-91
0	3/1/85	CM			INITIAL ISSUE

THE PREPARATION OF THIS DRAWING HAS BEEN FINANCED IN PART THROUGH A GRANT FROM THE U. S. DEPARTMENT OF TRANSPORTATION, URBAN MASS TRANSPORTATION ADMINISTRATION, UNDER THE URBAN MASS TRANSPORTATION ACT OF 1964, AS AMENDED, AND IN PART BY THE TAXES OF THE CITIZENS OF LOS ANGELES COUNTY AND OF THE STATE OF CALIFORNIA

DESIGNED BY
DRAWN BY DRM/JAP
CHECKED BY J.A. Doolittle
IN CHARGE T.H. Martin
DATE 12 MAR. 85

REGISTERED PROFESSIONAL ENGINEER JAMES A. DOOLITTLE No. 17412 CIVIL STATE OF CA

SOUTHERN CALIFORNIA RAPID TRANSIT DISTRICT
METRO RAIL PROJECT
RTD

CCI/ESA/GRC
General Geotechnical Consultants
SUBMITTED J.A. Doolittle

DMJM/PBQD/KE/HWA
A JOINT VENTURE
GENERAL CONSULTANTS
APPROVED Harold Khaliff

LA CBD TO NORTH HOLLYWOOD
WILSHIRE/ALVARADO LINE
BORING LOGS 11-9 & 11-10

CONTRACT NO. [redacted] A-171
DRAWING NO. S-120 REV. 1
SCALE NO SCALE
SHEET NO. 059

THIS BORING LOG IS BASED ON FIELD CLASSIFICATION AND VISUAL SOIL DESCRIPTION BUT IS MODIFIED TO INCLUDE RESULTS OF LABORATORY CLASSIFICATION TESTS WHEN AVAILABLE. THIS LOG IS APPLICABLE ONLY AT THIS LOCATION AND TIME CONDITIONS MAY DIFFER AT OTHER LOCATIONS OR TIME

Converse Consultants, Inc.
Earth Sciences Associates
Geo/Resource Consultants

BORING LOG 11-11

Proj: DESIGN UNIT A170 Date Drilled 1-15-84 Ground Elev. 251.6'
Drill Rig FAILING 250 Logged By D. Gillette Total Depth 78.0'
Hole Diameter 8" Hammer Weight & Fall 300 lb @ 15"

DEPTH	USCS	MATERIAL CLASSIFICATION	SAMPLE	BLOWS/FT	DRILL MODE	REMARKS
0	AF	0.0-4.0 ARTIFICIAL FILL: sand; gravel; wood; glass; boulders; wet; medium dense			AD	
2			C-1	12K	DR	
					RD	
4	ML	4.0-9.0 SILTY CLAY: pale yellowish brown mottled; very moist	PB 1		PB	2.5/2.5 recovery
6			C-2	12	DR	
					RD	
10		9.0-78.0 BEDROCK-PUENTE FORMATION SILTY CLAYSTONE interbedded WITH SILTY SANDSTONE: moderate brown; moist	PB 2		PB	2.5/2.5 recovery
12		*Physical Condition: little fracturing to massive soft to friable hardness; plastic to friable strength; fresh to little weathered	C-3	53	DR	
14					RD	
16		16.0 olive gray and dusky yellowish brown	PB 3		PB	2.5/2.5 recovery
18			C-4	68	DR	
20					RD	

Sheet 1 of 4

Project DESIGN UNIT A170 Date Drilled 1-15-84 Hole No. 11-11

DEPTH	USCS	MATERIAL CLASSIFICATION	SAMPLE	BLOWS/FT	DRILL MODE	REMARKS
20		9.0-78.0 PUENTE FORMATION SILTY CLAYSTONE interbedded with SILTY SANDSTONE: moist	PB4		RD PB	2.5/2.5 recovery
22						
			C-5	100R	DR	
24		thinly bedded (¼") laminated silty claystone beds and silty sandstone beds; moist			RD	
26			PB5		PB	2.5/2.5 recovery
28			C-6	100	DR	
30					RD	
32			PB6		PB	2.5/2.5 recovery
34			C-7	100	DR	
36					RD	
			PB7		PB	2.5/2.5 recovery
38			C-8	100	DR	
40					RD	
42			PB8		PB	2.5/2.5 recovery
44						

Sheet 2 of 4

Project DESIGN UNIT A170 Date Drilled 1-15-84 Hole No. 11-11

DEPTH	USCS	MATERIAL CLASSIFICATION	SAMPLE	BLOWS/FT	DRILL MODE	REMARKS
44		9.0-78.0 PUENTE FORMATION SILTY CLAYSTONE interbedded with SILTY SANDSTONE: (cont.) moist	PB 8		PB	2.5/2.5 recovery
			C-9	100	DR	
46					RD	
48			PB 9		PB	2.5/2.5 recovery
50			C-10	100	DR	
52					RD	
54			PB10		PB	2.5/2.5 recovery
56			C-11	100	DR	
58					RD	
60		60-78.0 increased sandstone	PB11		PB	2.5/2.5 recovery
62			C-12	100	DR	
64					RD	
			PB12		PB	2.5/2.5 recovery
66			C-13	100	DR	
68						

Sheet 3 of 4

Project DESIGN UNIT A170 Date Drilled 1-15-84 Hole No. 11-11

DEPTH	USCS	MATERIAL CLASSIFICATION	SAMPLE	BLOWS/FT	DRILL MODE	REMARKS
68		910-78.0 PUENTE FORMATION SILTY CLAYSTONE interbedded with SILTY SANDSTONE: (cont.)			RD	
70			PB13		PB	2.5/2.5 recovery
72			C-14	100	DR	
74					RD	
76			PB 14		PB	2.5/2.5 recovery
78		B.H. 78.0' Terminated Hole				
80						
82						
84						
86						
88						
90						
92						

Sheet 4 of 4

RECORD DRAWING

THE PREPARATION OF THIS DRAWING HAS BEEN FINANCED IN PART THROUGH A GRANT FROM THE U. S. DEPARTMENT OF TRANSPORTATION, URBAN MASS TRANSPORTATION ADMINISTRATION, UNDER THE URBAN MASS TRANSPORTATION ACT OF 1964, AS AMENDED, AND IN PART BY THE TAXES OF THE CITIZENS OF LOS ANGELES COUNTY AND OF THE STATE OF CALIFORNIA

REV.	DATE	BY	SUB.	APP.	DESCRIPTION
1	9/20/91	SMM	JJOO	GMK	NO REVISIONS INDICATED ON THIS AS-BUILT MARKUPS RECEIVED 9-91
0	3/15/85	CM			INITIAL ISSUE

DESIGNED BY
DRAWN BY DRM/JAP
CHECKED BY J.A. Doolittle
IN CHARGE T.Y. Cahill
DATE 12 MAR. 85

REGISTERED CIVIL ENGINEER JAMES A. DOOLITTLE No 24662 CIVIL STATE OF CALIFORNIA

SOUTHERN CALIFORNIA RAPID TRANSIT DISTRICT
METRO RAIL PROJECT
RTD

CCI/ESA/GRC
General Geotechnical Consultants
SUBMITTED J.A. Doolittle

DMJM/PBQD/KE/HWA
A JOINT VENTURE
GENERAL CONSULTANTS
APPROVED Howard J. Cahill

LA CBD TO NORTH HOLLYWOOD
WILSHIRE/ALVARADO LINE
BORING LOGS 11-11

CONTRACT NO. A-171
DRAWING NO. S-121 REV. 1
SCALE NO SCALE
SHEET NO. 100



475 Goddard, Suite 200 | Irvine, California 92618 | p. 949.753.7070

ARIZONA | CALIFORNIA | COLORADO | NEVADA | TEXAS | UTAH

ninyoandmoore.com

Ninyo & Moore

Geotechnical & Environmental Sciences Consultants

Ninyo & Moore
Geotechnical & Environmental Sciences Consultants

July 29, 2022
Project No. 211019003

Ms. Inge Wiersema
Carollo Engineers, Inc.
707 Wilshire Boulevard, Suite 3920
Los Angeles, California 90017

Subject: Addendum to Geotechnical Evaluation
MacArthur Lake Rehabilitation Project Safe Clean Water Program – Measure W
City of Los Angeles, Department of Public Works, Bureau of Sanitation
Los Angeles, California

Reference: Ninyo & Moore, 2022, Geotechnical Evaluation, MacArthur Park Lake Rehabilitation Project, Safe Clean Water Program – Measure W, City of Los Angeles, Department of Public Works, Bureau of Sanitation, Project No. 211019003, dated July 1.

Dear Ms. Wiersema:

As described in our referenced geotechnical evaluation report (Ninyo & Moore, 2022), an additional boring was planned on Lake Street in the vicinity of the proposed meter and valve vault structures, pump station, pre-treatment unit, and diversion structure that was not completed at the time we prepared our report. This final boring, boring B-4, was drilled and backfilled on July 8, 2022, and we have performed additional laboratory testing and engineering analysis of the field and laboratory data. This addendum letter presents a summary of our services, our additional subsurface exploration log and laboratory test results, as well as our updated conclusions and recommendations.

SCOPE

Our scope of services included the following:

- Project coordination, planning, and scheduling of the subsurface exploration.
- A field reconnaissance to mark-out the additional boring location for utility clearance by Underground Service Alert observe and to meet with City of Los Angeles Inspectors.
- Acquisition of a County of Los Angeles Department of Public Health, Environmental Health Drinking Water Program permit.
- Subsurface evaluation of one small-diameter boring. The boring was logged and sampled by a representative from Ninyo & Moore. The boring was backfilled with cement-bentonite grout and the excavated soils were drummed for removal from the site.

- Geotechnical laboratory testing on representative soil and bedrock samples, including evaluation of in-situ moisture content and dry density, gradation analysis, percentage of particles finer than the No. 200 sieve, Atterberg limits, direct shear strength, expansion index, and soil corrosivity.

- Analytical laboratory testing of a representative sample for disposal of the soil drums generated during the subsurface exploration.

- Data compilation and engineering analysis of the additional subsurface information and laboratory testing.

- Preparation of this addendum letter resenting our findings, conclusions, and recommendations for the design and construction of the proposed improvements.

SUBSURFACE EXPLORATION AND LABORATORY TESTING

Our additional subsurface exploration was performed on July 8, 2022. The exploration included collecting disturbed and relatively undisturbed soil and bedrock samples from one small-diameter, hollow-stem auger boring drilled using a truck-mounted drill rig. The boring was advanced to a depth of approximately 51½ feet below the ground surface. The approximate location of our additional exploratory boring, B-4, is presented on Figure 1. For reference, Figure 1 also shows the locations of previous borings performed by Ninyo & Moore for the MacArthur Lake Rehabilitation Project (Ninyo & Moore, 2022). The log of the additional boring, B-4, is presented in Attachment A.

Laboratory testing of representative samples from boring B-4 was performed to evaluate in-situ moisture content and dry density, gradation, percentage of particles finer than the No. 200 sieve, Atterberg limits, direct shear strength, expansion index, and soil corrosivity. The results of our in-situ moisture content and dry density tests are presented on the boring log in Attachment A. The remaining laboratory test results are presented in Attachment B.

SUBSURFACE CONDITIONS

The materials encountered in boring B-4 were similar to the conditions that were encountered in our previous borings that were included in our geotechnical evaluation report (Ninyo & Moore, 2022). Beneath the pavement, we observed fill materials that extended to a depth of approximately 8 feet. The fill consisted of moist, stiff sandy lean clay. Alluvium was encountered beneath the fill to a depth of approximately 23 feet which consisted of moist, loose clayey sand and moist to wet, stiff to very stiff sandy clay. Bedrock materials of the Puente Formation were encountered beneath the alluvium to the total depth explored of 51½ feet. The bedrock consisted of wet, very soft to moderately soft, strongly indurated, sandy siltstone and silty claystone. Iron oxide staining was observed on some fracture surfaces. Groundwater was encountered during drilling at a depth of 23 feet and the groundwater rose to a depth of approximately 15 feet approximately 40 minutes after drilling had

stopped. Fluctuations in the level of groundwater may occur as discussed in our geotechnical evaluation report (Ninyo & Moore, 2022).

CONCLUSIONS AND RECOMMENDATIONS

As indicated above, the soil and groundwater conditions that were observed in boring B-4 were generally consistent with the subsurface conditions we observed in our previous borings. Based on the boring B-4 and our review of the preliminary construction drawings for the project, we anticipate that the proposed pretreatment and pump station structures that will be on the order of 23 to 25 feet deep will expose competent bedrock materials at the foundation subgrade while the valve vault, meter vault and pipelines will expose alluvial soils at their subgrade elevations.

Based on these similar findings, the conclusions and recommendations presented in our geotechnical evaluation report (Ninyo & Moore, 2022) remain applicable and additional or revised recommendations are not needed. As described in our referenced report, we recommend that Ninyo & Moore review the project plans and specifications when they have been prepared so that we can perform a geotechnical review to evaluate if they have been prepared in accordance with our recommendations.

We appreciate the opportunity to be of service on this project.

Respectfully submitted,
NINYO & MOORE

Jennifer R. Schmidt, PG, CEG
Senior Geologist

Michael L. Putt, PG, CEG
Principal Geologist

Madan Chirumalla, PE, GE
Principal Engineer

VAM/JRS/MLP/MAC/ss

Attachments: Figure 1 – Boring Locations
Attachment A – Boring Log
Attachment B – Laboratory Testing

FIGURE

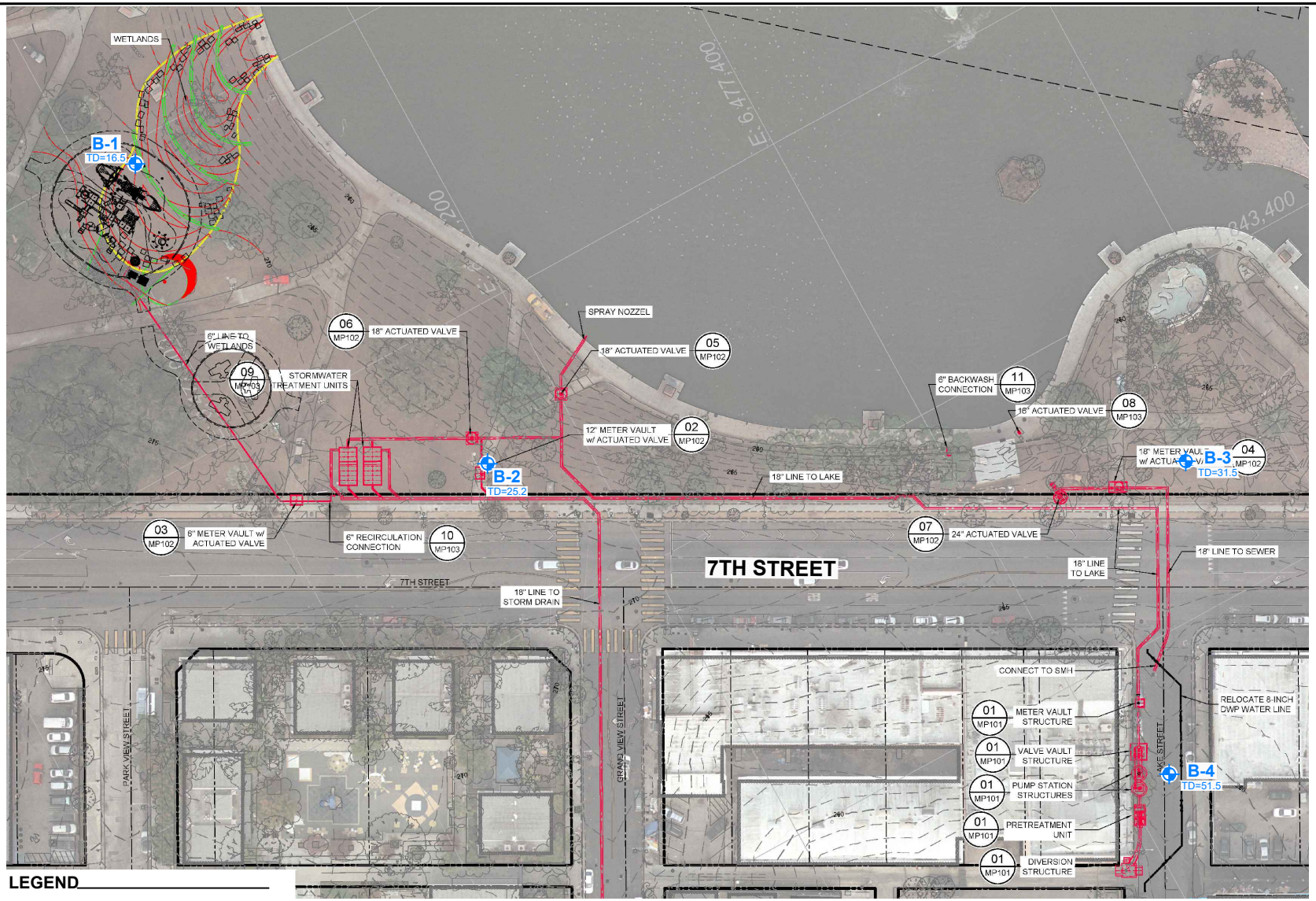

NOTE: DIMENSIONS, DIRECTIONS AND LOCATIONS ARE APPROXIMATE. I REFERENCE: CORDOBA CORPORATION, 2022.

FIGURE 1

BORING LOCATIONS

MACARTHUR LAKE REHABILITATION PROJECT
LOS ANGELES, CALIFORNIA

211019003 I 7/22

Ninyo & Moore
Geotechnical & Environmental Sciences Consultants

211019003_BL.dwg 07/29/2022 (July 2022) GK, JDP

ATTACHMENT A

Boring Log

Soil Classification Chart Per ASTM D 2488

Primary Divisions			Secondary Divisions	
			Group Symbol	Group Name
COARSE-GRAINED SOILS more than 50% retained on No. 4 sieve	**GRAVEL** more than 50% of coarse fraction retained on No. 4 sieve	CLEAN GRAVEL less than 5% fines	GW	well-graded GRAVEL
			GP	poorly graded GRAVEL
		GRAVEL with DUAL CLASSIFICATIONS 5% to 12% fines	GW-GM	well-graded GRAVEL with silt
			GP-GM	poorly graded GRAVEL with silt
			GW-GC	well-graded GRAVEL with clay
			GP-GC	poorly graded GRAVEL with clay
		GRAVEL with FINES more than 12% fines	GM	silty GRAVEL
			GC	clayey GRAVEL
			GC-GM	silty, clayey GRAVEL
	SAND 50% or more of coarse fraction passes No. 4 sieve	CLEAN SAND less than 5% fines	SW	well-graded SAND
			SP	poorly graded SAND
		SAND with DUAL CLASSIFICATIONS 5% to 12% fines	SW-SM	well-graded SAND with silt
			SP-SM	poorly graded SAND with silt
			SW-SC	well-graded SAND with clay
			SP-SC	poorly graded SAND with clay
		SAND with FINES more than 12% fines	SM	silty SAND
			SC	clayey SAND
			SC-SM	silty, clayey SAND
FINE-GRAINED SOILS 50% or more passes No. 200 sieve	**SILT and CLAY** liquid limit less than 50%	INORGANIC	CL	lean CLAY
			ML	SILT
			CL-ML	silty CLAY
		ORGANIC	OL (PI > 4)	organic CLAY
			OL (PI < 4)	organic SILT
	SILT and CLAY liquid limit 50% or more	INORGANIC	CH	fat CLAY
			MH	elastic SILT
		ORGANIC	OH (plots on or above "A"-line)	organic CLAY
			OH (plots below "A"-line)	organic SILT
	Highly Organic Soils		PT	Peat

Grain Size

Description		Sieve Size	Grain Size	Approximate Size
Boulders		> 12"	> 12"	Larger than basketball-sized
Cobbles		3 - 12"	3 - 12"	Fist-sized to basketball-sized
Gravel	Coarse	3/4 - 3"	3/4 - 3"	Thumb-sized to fist-sized
	Fine	#4 - 3/4"	0.19 - 0.75"	Pea-sized to thumb-sized
Sand	Coarse	#10 - #4	0.079 - 0.19"	Rock-salt-sized to pea-sized
	Medium	#40 - #10	0.017 - 0.079"	Sugar-sized to rock-salt-sized
	Fine	#200 - #40	0.0029 - 0.017"	Flour-sized to sugar-sized
Fines		Passing #200	< 0.0029"	Flour-sized and smaller

Plasticity Chart

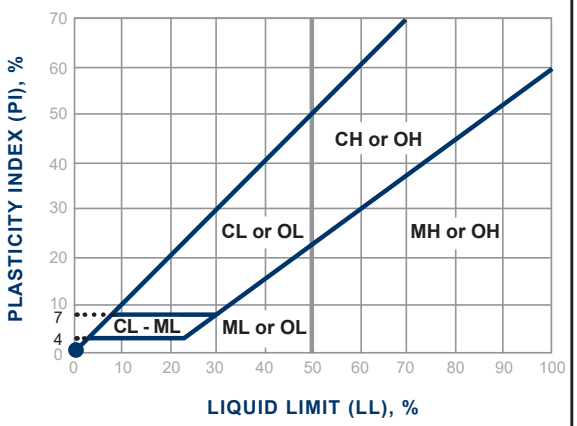

Apparent Density - Coarse-Grained Soil

Apparent Density	Spooling Cable or Cathead		Automatic Trip Hammer	
	SPT (blows/foot)	Modified Split Barrel (blows/foot)	SPT (blows/foot)	Modified Split Barrel (blows/foot)
Very Loose	≤ 4	≤ 8	≤ 3	≤ 5
Loose	5 - 10	9 - 21	4 - 7	6 - 14
Medium Dense	11 - 30	22 - 63	8 - 20	15 - 42
Dense	31 - 50	64 - 105	21 - 33	43 - 70
Very Dense	> 50	> 105	> 33	> 70

Consistency - Fine-Grained Soil

Consis-tency	Spooling Cable or Cathead		Automatic Trip Hammer	
	SPT (blows/foot)	Modified Split Barrel (blows/foot)	SPT (blows/foot)	Modified Split Barrel (blows/foot)
Very Soft	< 2	< 3	< 1	< 2
Soft	2 - 4	3 - 5	1 - 3	2 - 3
Firm	5 - 8	6 - 10	4 - 5	4 - 6
Stiff	9 - 15	11 - 20	6 - 10	7 - 13
Very Stiff	16 - 30	21 - 39	11 - 20	14 - 26
Hard	> 30	> 39	> 20	> 26

Ninyo & Moore
Geotechnical & Environmental Sciences Consultants

USCS METHOD OF SOIL CLASSIFICATION

BORING LOG EXPLANATION SHEET

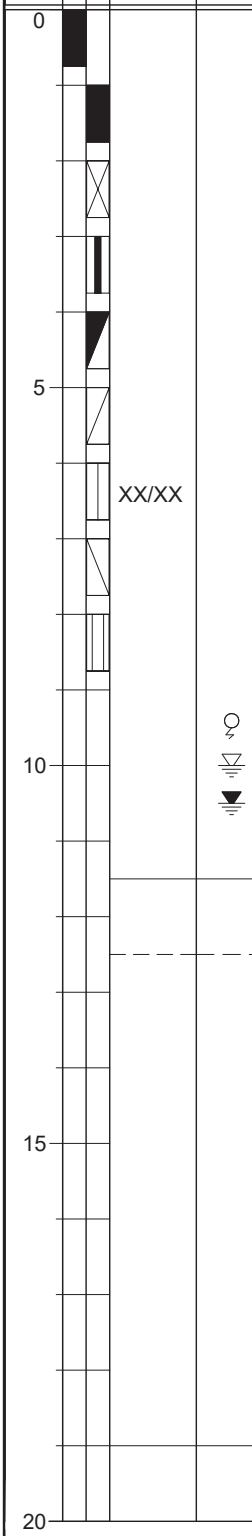

Bulk sample.

Modified split-barrel drive sampler.

No recovery with modified split-barrel drive sampler.

Sample retained by others.

Standard Penetration Test (SPT).

No recovery with a SPT.

Shelby tube sample. Distance pushed in inches/length of sample recovered in inches.

No recovery with Shelby tube sampler.

Continuous Push Sample.

Seepage.

Groundwater encountered during drilling.

Groundwater measured after drilling.

SM

MAJOR MATERIAL TYPE (SOIL):

Solid line denotes unit change.

CL

Dashed line denotes material change.

Attitudes: Strike/Dip
b: Bedding
c: Contact
j: Joint
f: Fracture
F: Fault
cs: Clay Seam
s: Shear
bss: Basal Slide Surface
sf: Shear Fracture
sz: Shear Zone
sbs: Shear Bedding Surface

The total depth line is a solid line that is drawn at the bottom of the boring.

DATE DRILLED 7/8/22 BORING NO. B-4

GROUND ELEVATION 259' ± (MSL) SHEET 1 OF 2

METHOD OF DRILLING 8" Hollow-Stem Auger (Martini Drilling)

DRIVE WEIGHT 140 lbs (Auto. Trip Hammer) DROP 30"

SAMPLED BY VAM LOGGED BY VAM REVIEWED BY MLP

DEPTH (feet)	SAMPLES (Bulk / Driven)	BLOWS/FOOT	MOISTURE (%)	DRY DENSITY (PCF)	SYMBOL	CLASSIFICATION U.S.C.S.	DESCRIPTION/INTERPRETATION
0						SP-SM	ASPHALT CONCRETE: Approximately 6 inches thick.
						SM	AGGREGATE BASE: Light brown, moist, medium dense, poorly graded SAND with silt and gravel; approximately 6 inches thick.
						CL	SUB-BASE: Black, moist, medium dense, RECLAIMED ASPHALT CONCRETE; approximately 6 inches thick.
		7	25.5	94.1			FILL: Grayish green and dark brown, moist, stiff, sandy lean CLAY; few organic materials.
						SC	ALLUVIUM: Dark brown, moist, loose, clayey SAND.
10		9	11.9	120.4			
						CL	Dark brown, moist, stiff, sandy lean CLAY.
			14.8	117.5			
		16	14.8	117.5			@ 15.3': Groundwater measured after approximately 40 minutes. Very stiff.
20		9	39.3	81.6			Pale olive; stiff, lean CLAY; iron oxide veins.
							@ 23': Groundwater encountered during drilling.
							PUENTE FORMATION: Yellowish brown, wet, weakly indurated, very soft, sandy SILTSTONE; iron oxide staining along fracture surfaces.
		8	43.5	76.7			
30		16					Dark grayish brown, soft to moderately soft, strongly indurated, silty CLAYSTONE; no discernible bedding observed in sample.
		53					Soft.
40							

FIGURE A- 1

Ninyo & Moore
Geotechnical & Environmental Sciences Consultants

MACARTHUR LAKE REHABILITATION PROJECT
LOS ANGELES, CALIFORNIA
211019003 | 7/22

DATE DRILLED 7/8/22 BORING NO. B-4

GROUND ELEVATION 259' ± (MSL) SHEET 2 OF 2

METHOD OF DRILLING 8" Hollow-Stem Auger (Martini Drilling)

DRIVE WEIGHT 140 lbs (Auto. Trip Hammer) DROP 30"

SAMPLED BY VAM LOGGED BY VAM REVIEWED BY MLP

DEPTH (feet)	SAMPLES (Bulk / Driven)	BLOWS/FOOT	MOISTURE (%)	DRY DENSITY (PCF)	SYMBOL	CLASSIFICATION U.S.C.S.	DESCRIPTION/INTERPRETATION
40	Driven	15					PUENTE FORMATION: (Continued) Dark grayish brown, wet, soft, weakly indurated, silty CLAYSTONE; no discernible bedding observed in sample.
	Driven	66					Soft to moderately soft.
50	Driven	24					
							Total Depth = 51.5 feet. Groundwater was encountered during drilling at approximately 23.0 feet. Groundwater was measured at approximately 15.3 feet after 40 minutes. Backfilled with cement-bentonite and temporary cold asphalt concrete on 7/8/22. Hot patch asphalt repairs performed on 7/15/22. Notes: Groundwater may rise to a level higher than that measured in borehole due to seasonal variations in precipitation and several other factors as discussed in the report. The ground elevation shown above is an estimation only. It is based on our interpretations of published maps and other documents reviewed for the purposes of this evaluation. It is not sufficiently accurate for preparing construction bids and design documents.
60							
70							
80							

ATTACHMENT B

Laboratory Testing

APPENDIX B

LABORATORY TESTING

Classification
Soils were visually and texturally classified in accordance with the Unified Soil Classification System (USCS) in general accordance with ASTM D 2488. Soil classifications are indicated on the logs of the exploratory borings in Appendix A.

In-Place Moisture and Density Tests
The moisture content and dry density of relatively undisturbed samples obtained from the exploratory borings were evaluated in general accordance with ASTM D 2937. The test results are presented on the logs of the exploratory borings in Appendix A.

Gradation Analysis
A gradation analysis test was performed on a selected representative soil sample in general accordance with ASTM D 422. The grain-size distribution curve is shown on Figure B-1. The test results were utilized in evaluating the soil classifications in accordance with the USCS.

200 Wash
An evaluation of the percentage of particles finer than the No. 200 sieve in a selected soil sample was performed in general accordance with ASTM D 1140. The results of the tests are presented on Figure B-2.

Atterberg Limits
A test was performed on a selected representative fine-grained soil sample to evaluate the liquid limit, plastic limit, and plasticity index in general accordance with ASTM D 4318. The test results were utilized to evaluate the soil classification in accordance with the USCS. The test results and classification are shown on Figure B-3.

Direct Shear Tests
A direct shear test was performed on a relatively undisturbed sample in general accordance with ASTM D 3080 to evaluate the shear strength characteristics of selected materials. The sample was inundated during shearing to represent adverse field conditions. The results are shown on Figure B-4.

Expansion Index Tests
The expansion index of a selected materials was evaluated in general accordance with Uniform Building Code (UBC) Standard No. 18-2 (ASTM D 4829). The specimen was molded under a specified compactive energy at approximately 50 percent saturation (plus or minus 1 percent). The prepared 1-inch thick by 4-inch diameter specimen was loaded with a surcharge of 144 pounds per square foot and was inundated with tap water. Readings of volumetric swell were made for a period of 24 hours. The results of this test are presented on Figure B-5.

Soil Corrosivity Tests
Soil pH and resistivity tests were performed on representative samples in general accordance with California Test (CT) 643. The soluble sulfate and chloride content of the selected samples were evaluated in general accordance with CT 417 and CT 422, respectively. The test results are presented on Figure B-6.

GRAVEL		SAND			FINES	
Coarse	Fine	Coarse	Medium	Fine	SILT	CLAY

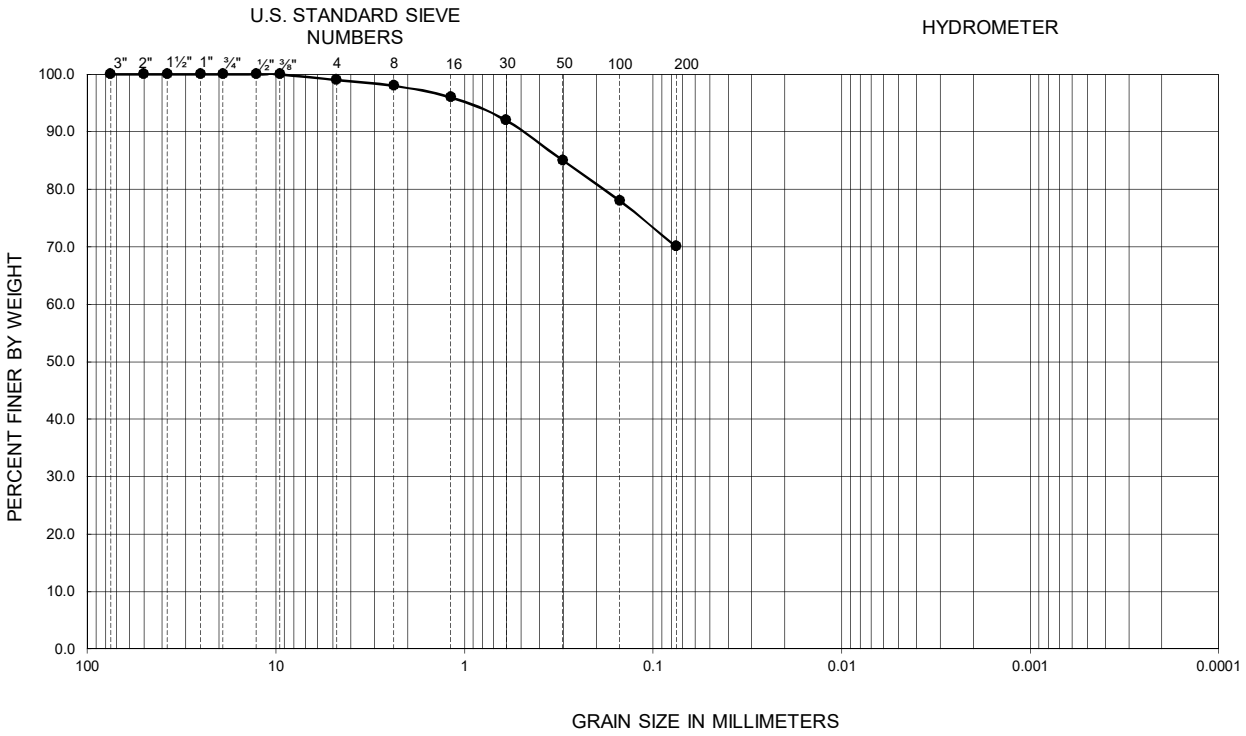

Symbol	Sample Location	Depth (ft)	Liquid Limit	Plastic Limit	Plasticity Index	D_{10}	D_{30}	D_{60}	C_u	C_c	Passing No. 200 (percent)	USCS
●	B-4	1.5-6.0	47	16	31	--	--	--	--	--	70	CL

PERFORMED IN GENERAL ACCORDANCE WITH ASTM D 6913

FIGURE B-1

GRADATION TEST RESULTS

MACARTHUR LAKE REHABILITATION PROJECT
LOS ANGELES, CALIFORNIA

211019003 | 7/22

Ninyo & Moore
Geotechnical & Environmental Sciences Consultants

SAMPLE LOCATION	SAMPLE DEPTH (ft)	DESCRIPTION	PERCENT PASSING NO. 4	PERCENT PASSING NO. 200	USCS (TOTAL SAMPLE)
B-4	11.0-15.0	SANDY LEAN CLAY	99	51	CL

PERFORMED IN GENERAL ACCORDANCE WITH ASTM D 1140

FIGURE B-2

NO. 200 SIEVE ANALYSIS TEST RESULTS

MACARTHUR LAKE REHABILITATION PROJECT
LOS ANGELES, CALIFORNIA

Ninyo & Moore
Geotechnical & Environmental Sciences Consultants

SYMBOL	LOCATION	DEPTH (ft)	LIQUID LIMIT	PLASTIC LIMIT	PLASTICITY INDEX	USCS CLASSIFICATION (Fraction Finer Than No. 40 Sieve)	USCS
●	B-4	1.5-6.0	47	16	31	CL	CL

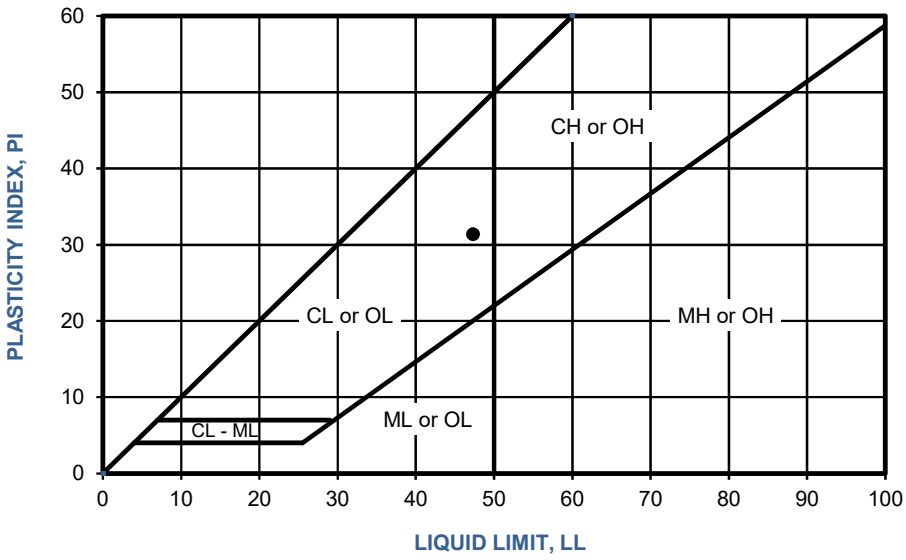

PERFORMED IN GENERAL ACCORDANCE WITH ASTM D 4318

FIGURE B-3

ATTERBERG LIMITS TEST RESULTS

MACARTHUR LAKE REHABILITATION PROJECT
LOS ANGELES, CALIFORNIA

Ninyo & Moore
Geotechnical & Environmental Sciences Consultants

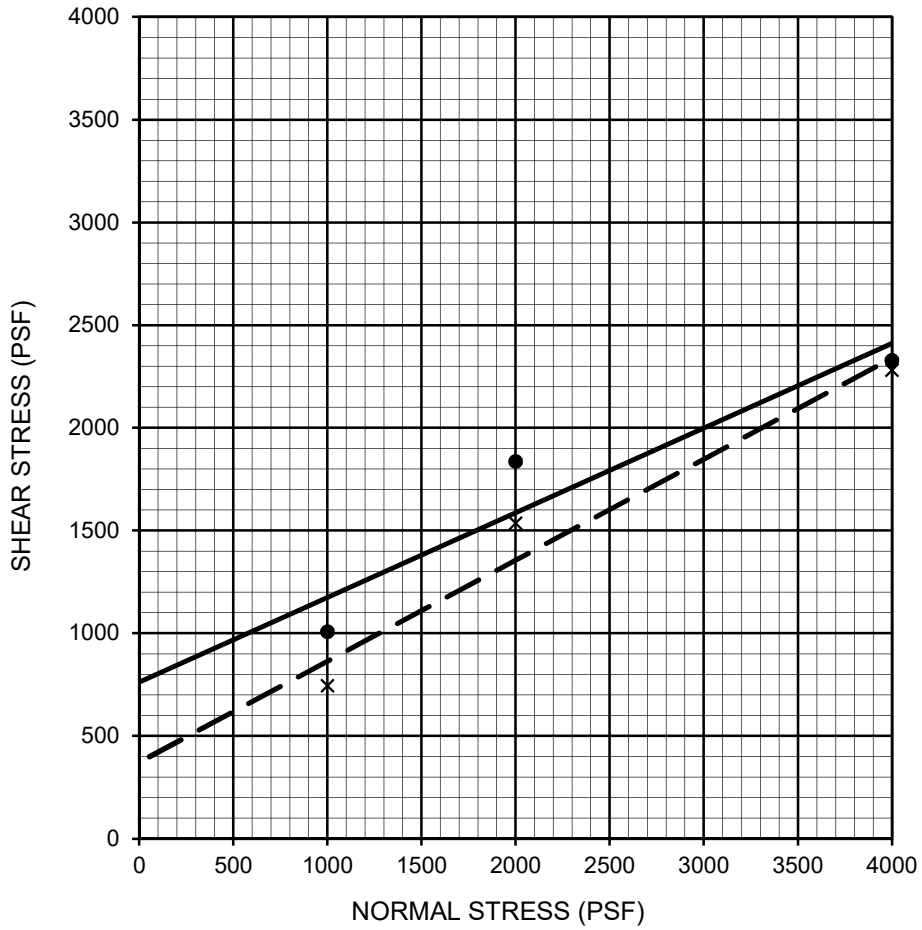

Description	Symbol	Sample Location	Depth (ft)	Shear Strength	Cohesion (psf)	Friction Angle (degrees)	Soil Type
SANDY LEAN CLAY	—●—	B-4	10.0-11.3	Peak	762	22	CL
SANDY LEAN CLAY	– – X – –	B-4	10.0-11.3	Ultimate	372	26	CL

PERFORMED IN GENERAL ACCORDANCE WITH ASTM D 3080

FIGURE B-4

DIRECT SHEAR TEST RESULTS

MACARTHUR LAKE REHABILITATION PROJECT
LOS ANGELES, CALIFORNIA

Ninyo & Moore
Geotechnical & Environmental Sciences Consultants

211019003 | 7/22

SAMPLE LOCATION	SAMPLE DEPTH (ft)	INITIAL MOISTURE (percent)	COMPACTED DRY DENSITY (pcf)	FINAL MOISTURE (percent)	VOLUMETRIC SWELL (in)	EXPANSION INDEX	POTENTIAL EXPANSION
B-4	1.5-6.0	12.1	101.4	27.1	0.073	73	Medium

PERFORMED IN GENERAL ACCORDANCE WITH ☐ UBC STANDARD 18-2 ☑ ASTM D 4829

FIGURE B-5

EXPANSION INDEX TEST RESULTS

MACARTHUR LAKE REHABILITATION PROJECT
LOS ANGELES, CALIFORNIA

211019003 | 7/22

Ninyo & Moore
Geotechnical & Environmental Sciences Consultants

SAMPLE LOCATION	SAMPLE DEPTH (ft)	pH [1]	RESISTIVITY [1] (ohm-cm)	SULFATE CONTENT [2]		CHLORIDE CONTENT [3] (ppm)
				(ppm)	(%)	
B-4	1.5-6.0	8.2	915	10	0.001	35

[1] PERFORMED IN GENERAL ACCORDANCE WITH CALIFORNIA TEST METHOD 643
[2] PERFORMED IN GENERAL ACCORDANCE WITH CALIFORNIA TEST METHOD 417
[3] PERFORMED IN GENERAL ACCORDANCE WITH CALIFORNIA TEST METHOD 422

FIGURE B-6

CORROSIVITY TEST RESULTS

MACARTHUR LAKE REHABILITATION PROJECT
LOS ANGELES, CALIFORNIA

Ninyo & Moore
Geotechnical & Environmental Sciences Consultants

211019003 | 7/22

BUREAU OF ENGINEERING

MACARTHUR LAKE
STORMWATER CAPTURE PROJECT
PROJECT NO. S33WMLRP, S343MSWC, S043MSWC

ATTACHMENT 3
SUMMARY OF FIRST UTILITY NOTICE REPLIES

JANUARY 2026

City of Los Angeles
California

Department of Public Works
Bureau of Engineering

ENGINEERING
CITY OF LOS ANGELES

THIS PAGE INTENTIONALLY LEFT BLANK

Date: May 7, 2024

CITY OF LOS ANGELES
DEPARTMENT OF PUBLIC WORKS
BUREAU OF ENGINEERING

SUMMARY OF FIRST NOTICE REPLIES

W.O. No.:	Job ID.:	Project Title:
S33WMLRP	**1528**	**MacArthur Lake Stormwater Capture Project**

Bidders are advised that project plans usually depict the location of substructures as they existed when the project was designed. Present-day information may indicate that new facilities may have been added or are going to be added. Some of those substructures may now be or will be relocated, abandoned, removed, lowered, raised, blanketed, encased, enlarged, protected, or altered in some other way. Bidders are urged to carefully examine the proposed construction site for any evidence of recent surfacing of excavations, or the possible conflict with surface or aerial installations. Contractor should use the latest substructure maps and prepare their bid accordingly. If further information or clarification is desired, bidders are urged to immediately contact the appropriate utility company or the appropriate District Office of the Bureau of Engineering. Contractors may also contact the Utility Coordination Group, 1149 S. Broadway Street, Suite 140, Los Angeles, CA 90015, eng-utilitycoord@lacity.org. The contractor will need to coordinate work with utility companies during construction if necessary.

Based on the confirmation from the following utility companies, they have facilities within the improvement area that will definitely be affected.

DWP – WATER (CENTRAL) — David Thi — (213) 367 – 1093, david.thi@ladwp.com

Existing water facilities will be impacted by the proposed improvements and will require LADWP work. Please see attached cost estimate.

LADOT — Mehrnoosh Arabestani (213) 972 – 4989; Joseph Keung (213) 972 – 4977

Proposed improvements overlap with signals that will affect conductor cables, interconnectors, and DLC. Please see plans provided to locate conflicting signals.

Based on the confirmation from the following utility companies, they have facilities within the improvement area that may not require relocation but will mark them upon request. Notify Underground Service Alert at 1-800-227-2600 two working days prior to excavation to have facilities marked:

AT&T LONG DISTANCE — Joseph Forkert — (714) 963 – 7964, joef@forkertengineering.com

There is an active Transcontinental Fiber Optic Cable (long distance), in leased conduit from AT&T California (SBC-PAC BELL) in close proximity to the project. Please refer to enclosed cable record drawings.

CHARTER COMMUNICATIONS — Leigha Jameison — (310) 216 – 5574, leigha.jameison1@charter.com

There are existing Charter aerial and underground facilities within the project limits.

VERIZON BUSINESS	Dame Kasse	(949) 501 – 0914

There are underground and aerial facilities within the project area. Contact DigAlert and complete USA mark outs 48 hours prior to the start of any construction/excavation work. Any facilities that are marked out shall be protected in place. Verizon Business cannot verify the exact locations or depth of any facilities. If a conflict occurs, potholing should be performed, and all construction work should stop until the conflict is resolved.

Based on the confirmation from the following utility companies, there are no facilities within the improvement area that will be affected:

INFORMATION TECHNOLOGY AGENCY	Frank Gonzalez	(213) 978 – 4032
SOUTHERN CALIFORNIA GAS – TRANSMISSION	Nerses Papazyan	NPapazyan@socalgas.com

Please reference the Document Control File number DCF 0694-24NC on all future correspondence regarding this project.

The following utility companies have not responded to the First Utility Notice, but they may have facilities within the improvement area.

AT&T CALIFORNIA	Aaron Turner Cathy Hurtado	at7507@att.com (626) 817 – 4263
BUREAU OF STREET LIGHTING	Daniel Ordonia	(213) 847 – 1568
CROWN CASTLE	Kelly Klinefelter	(724) 743 – 6085
DWP – POWER	Richard Chang	(213) 367 – 2275
LA METRO	David Daniels A. D'Jean DeVolle Daniel De La Cruz	(213) 922 – 5190 (213) 922 – 5192 (213) 922 – 5076
LUMEN	Aliyah Skaro	(720) 888 – 2944
SOUTHERN CALIFORNIA GAS – DISTRIBUTION	Jason Sum	(310) 687 – 2011

for Arsen Voskerchyan, PE
Division Engineer
Project Award and Control Division
Bureau of Engineering
Department of Public Works

NOTICE OF PROPOSED PROJECT **FIRST NOTICE**

CITY OF LOS ANGELES
DEPARTMENT OF PUBLIC WORKS
BUREAU OF ENGINEERING

Date: March 28, 2024

The Department of Public Works is scheduling the following improvements:

Project Title: **MACARTHUR LAKE STORMWATER CAPTURE PROJECT**
Work Order No.: **S33WMLRP** **Job ID:** **1528**

Work to Be Performed: This project will capture, store, and treat stormwater for beneficial use at the park. The collected and treated stormwater will offset potable water use for lake fill. The proposed project will have water quality benefits for the MacArthur Lake as well as the downstream environment (in Ballona Creek Watershed). The project will provide community benefits to the Westlake neighborhood, a disadvantaged community in Council District 1, through landscaping, nature based solutions, greening of schools and land use improvements to enhance and preserve the project site and Los Angeles Historic Cultural Monument.

Please fill out the following and return one copy to the Utility Coordination Group by **April 27, 2024**.
PLEASE UPLOAD A COPY OF YOUR AS-BUILT PLANS, IN THE LINK PROVIDED IN THE EMAIL, SHOWING THE LOCATION OF YOUR FACILITIES (IN OR AROUND THE PROJECT AREA).

Your replies will be transmitted to prospective bidders and used in coordinating this project. Please note proper location of any facilities, live or abandoned, that are not shown or are shown incorrectly on the attached plans. The City will not be responsible for any damage to facilities that are not shown or are shown incorrectly on the plans. Failure to reply may deprive you of the protection provided for in the Standard Specifications. Construction delays and/or expenses due to failure in providing accurate information shall result in an assessment of costs to you, per Los Angeles Municipal Code (LAMC) 62.01 or your Franchise Agreement with the City.

Upon receipt and review of your response(s), the City will contact you to formalize your utility relocation (or protect-in-place) plan, with a utility relocation agreement if necessary.

For questions, please contact the Project Manager **Sean Phan** at (213) 913 – 4726 or **sean.phan**@lacity.org.

Thomas Guide Page: **634** Grids: **B3, C3**

Thank you,

Soyoon Eunice Lee, PE
Project Award and Control Division
Bureau of Engineering

☐ (1) Have prior rights. (Submit proof to our office within 30 days.)
☐ (2) Do not have facilities within the proposed project area.
☐ (3) Have facilities that will **not require relocation/adjustment** but will mark them upon request.
  (a) ☐ The accompanying recorded plans show facilities not delineated on the project plans.
  (b) ☐ The project plans correctly show our present utility locations.

See cost estimate.

☒ (4) Have facilities that will **require relocation/adjustment**. The facilities are delineated on the enclosed plan.
  (a) ☐ The following work is contemplated: _____
  (b) ☐ Estimated working days required for construction: _____
  (c) ☐ Construction may begin on _____ and conclude on _____
  (d) ☐ Work will **require** coordination with the contractor. (**EXPLAIN FULLY**).

For Paving Clearance, call: _____ Phone: _____ Station: _____

Los Angeles Department of Water and Power — Company Name
213-367-1093 — Phone No.

David Thi — Representative (Print Name)

david.thi@ladwp.com — E-mail Address

Signature

4/9/24 — Date

Return one copy of this First Notice to
Attn: Verenice Hernandez
Department of Public Works
Bureau of Engineering,
Project Award and Control Division
Utility Coordination Group (Mail Stop 501)
1149 S. Broadway, Suite 140
Los Angeles, CA 90015-2213
Tel. (213) 485-1616
Email: **eng-utilitycoord@lacity.org**

(Revised 12-17)

Water Distribution Engineering

ESTIMATE REQUEST

Date November 7, 2023

JOB TITLE : **McArthur Stormwater Capture**

Work Description :

Fire Hydrant ☑ Main ☐ Service ☐ Other ☐

Applicant :

Address :

Phone : Fax :

See Attachment ☐

Requested By :

Phone :

Estimate of Cost : $ 172,894.84

Engineering Remarks :

260 feet of 6-inch DI (Grand View St)	$	91,000.00
SDRF (2 feet x 260 feet, Local)	$	26,697.60
F-17901 (New Main,Standard)	$	15,407.00
SDRF (2 feet x 8 feet, Local)	$	1,779.84
70 feet of 8-inch DI (S Lake St)	$	30,100.00
SDRF (2 feet x 70 feet, Local)	$	7,910.40

Estimated By : D.Thi

Approved By : D.Thi

Comments : BOE to contact Departmet of Drinking Water (DDW) on Water and Sewer/Storm Drain separatio
BOE to provide traffic control plan for DWP to perform water main relocation

Tract No.

2017-001

CFN

NOTICE OF PROPOSED PROJECT **FIRST NOTICE**

CITY OF LOS ANGELES
DEPARTMENT OF PUBLIC WORKS
BUREAU OF ENGINEERING

Date: March 28, 2024

The Department of Public Works is scheduling the following improvements:

Project Title: **MACARTHUR LAKE STORMWATER CAPTURE PROJECT**
Work Order No.: **S33WMLRP** **Job ID:** **1528**

Work to Be Performed: This project will capture, store, and treat stormwater for beneficial use at the park. The collected and treated stormwater will offset potable water use for lake fill. The proposed project will have water quality benefits for the MacArthur Lake as well as the downstream environment (in Ballona Creek Watershed). The project will provide community benefits to the Westlake neighborhood, a disadvantaged community in Council District 1, through landscaping, nature based solutions, greening of schools and land use improvements to enhance and preserve the project site and Los Angeles Historic Cultural Monument.

Please fill out the following and return one copy to the Utility Coordination Group by **April 27, 2024**.
PLEASE UPLOAD A COPY OF YOUR AS-BUILT PLANS, IN THE LINK PROVIDED IN THE EMAIL, SHOWING THE LOCATION OF YOUR FACILITIES (IN OR AROUND THE PROJECT AREA).

Your replies will be transmitted to prospective bidders and used in coordinating this project. Please note proper location of any facilities, live or abandoned, that are not shown or are shown incorrectly on the attached plans. The City will not be responsible for any damage to facilities that are not shown or are shown incorrectly on the plans. Failure to reply may deprive you of the protection provided for in the Standard Specifications. Construction delays and/or expenses due to failure in providing accurate information shall result in an assessment of costs to you, per Los Angeles Municipal Code (LAMC) 62.01 or your Franchise Agreement with the City.

Upon receipt and review of your response(s), the City will contact you to formalize your utility relocation (or protect-in-place) plan, with a utility relocation agreement if necessary.

For questions, please contact the Project Manager **Sean Phan** at (213) 913 – 4726 or **sean.phan**@lacity.org.

Thomas Guide Page: **634** Grids: **B3, C3**

Thank you,

Soyoon Eunice Lee, PE
Project Award and Control Division
Bureau of Engineering

☐ (1) Have prior rights. (Submit proof to our office within 30 days.)
☐ (2) Do not have facilities within the proposed project area.
☐ (3) Have facilities that will **not require relocation/adjustment** but will mark them upon request.
  (a) ☐ The accompanying recorded plans show facilities not delineated on the project plans.
  (b) ☐ The project plans correctly show our present utility locations.
☑ (4) Have facilities that will **require relocation/adjustment**. The facilities are delineated on the enclosed plan.
  (a) ☐ The following work is contemplated: _____
  (b) ☐ Estimated working days required for construction: _____
  (c) ☐ Construction may begin on _____ and conclude on _____
  (d) ☐ Work will **require** coordination with the contractor. (**EXPLAIN FULLY**).

For Paving Clearance, call: _____ Phone: _____ Station: _____

Return one copy of this First Notice to
Attn: Verenice Hernandez
Department of Public Works
Bureau of Engineering,
Project Award and Control Division
Utility Coordination Group (Mail Stop 501)
1149 S. Broadway, Suite 140
Los Angeles, CA 90015-2213
Tel. (213) 485-1616
Email: **eng-utilitycoord@lacity.org**

_____ (Company Name) _____ (Phone No.)

Mehrnoosh Arabestani
Representative (Print Name)

Mehrnoosh.Arabestani@lacity.org
E-mail Address

Mehrnoosh Arabestani
Signature

3-29-24
Date

(Revised 12-17)

Verenice Hernandez <verenice.hernandez@lacity.org>

S33WMLRP - MacArthur Lake Storm water Capture Project

Mehrnoosh Arabestani <Mehrnoosh.arabestani@lacity.org> Fri, Mar 29, 2024 at 12:15 PM
To: Verenice Hernandez <verenice.hernandez@lacity.org>, Engdu Workneh <engdu.workneh@lacity.org>, Sean Phan <sean.phan@lacity.org>, Joseph Keung <joseph.keung@lacity.org>

Hello,
I highlight the conflicting signals that overlap storm water to make it easier to locate them. As a result, our conductor cable, interconnects, and DLC are affected. I can be reached at 213.972.4989 if you have any questions.

Best

Mehrnoosh Mary Arabestani

Transportation Engineering Associate
Interagency Permit Plan Review Section

Los Angeles Department of Transportation
213.972.4989

*Please note that Mondays are my Regular Day Off (RDO).

S33WMLRP - MacArthur Lake Stormwater Capture Project.pdf
1076K

SIGNAL STANDARD SCHEDULE

	No.	TYPE	FOUND. TYPE	PED. PUSH BUT'N TYPE(PED)	PHASE	REMARKS
	⊗ (1)	332 CAB	F-332	–	–	ATSAC 2070 CONTROLLER IN 332 CAB
**	⊗ (2)	17-3-100	CIDH	APS(4P)	4	15' MAST ARM
	⊗ (3)	9	F-1			
	⊗ (4)	9	F-1			
*	⊗ (5)	CD929B	BSL	APS(4P)	4	
**	⊗ (6)	18-4-100	CIDH	APS(4P)	4	25' MAST ARM, F=12'
	⊗ (7)	1A	F-1			
***	⊗ (8)	CD929B	BSL	APS(4P)	4	

∗ – EXISTING
∗∗ – STANDARD AND FOUNDATION PER LADOT STD. DWG. NO. S-52.1.6, SIGNED JULY 24, 2007.
∗∗∗ – FOR REFERENCE ONLY; SEE STREET LIGHTING SHEET
(PED) – ACCESSIBLE PEDESTRIAN SIGNAL CONNECTED TO CORRESPONDING PEDESTRIAN SIGNAL.

NOTES:

1. SEMI-ACTUATED OPERATION
(ATSAC 2070 CONTROLLER)

ø2 – 7TH ST. WB
ø4 – GRAND VIEW ST. NB, W/S PED XING & E/S PED XING
ø6 – 7TH ST. EB & S/S PED XING

WILSHIRE EAST ATSAC SYSTEM
DIRECT CABLE INTERCONNECT

[2] INSTALL DETECTOR LOOP(S) PER LADOT STD. DWG. NO. S-70.1A & S-70.1D (CASE II).

[3] CONVERT EXISTING MULTIPLE STREET LIGHTING SERVICE (SP#270080M) TO COMBINATION TRAFFIC SIGNAL AND STREET LIGHTING SERVICE. INSTALL 2" CONDUIT FROM SERVICE POINT TO PULL BOX. INSTALL 2–#6 SERVICE WIRES FROM PULL BOX TO CONTROLLER AND A 60–AMP FUSE IN AN IN–LINE WATERPROOF FUSE HOLDER IN THE SERVICE PULL BOX. INSTALLATION SHALL BE PER LADOT STD. DWG. NO. S–79.9. WORK ON ANY ELECTRICAL SERVICE EQUIPMENT TO BE DONE IN CONJUNCTION WITH DEPARTMENT OF WATER AND POWER (DWP) PERSONNEL. CONTRACT DWP AT (213) 367–9966 SEVEN (7) WORKING DAYS PRIOR TO BEGINNING WORK ON THE SERVICE LINE.

[4] INSTALL ATSAC 2070 CONTROLLER IN 332 CABINET. THE CONTRACTOR SHALL PROVIDE A COMPLETE FUNCTIONING CONTROLLER ASSEMBLY AND CABINET CONFORMING TO THE LATEST LADOT SPECIFICATION FOR 2070 CONTROLLER AND 332 CABINET, AND SHALL INCLUDE ALL NECESSARY AUXILIARY EQUIPMENT TO PROVIDE A COMPLETE AND FUNCTIONING CONTROLLER. CONTRACTOR TO DELIVER COMPLETELY ASSEMBLED CONTROLLER FOR TESTING TO THE DEPARTMENT OF TRANSPORTATION GENERAL SHOP, PIPER TECHNICAL CENTER, 555 RAMIREZ STREET THIRTY (30) DAYS PRIOR TO INSTALLATION. CONTRACTOR TO PICK UP AND INSTALL CONTROLLER ASSEMBLY ON F–332 FOUNDATION.

5. THE B–PERMITTEE SHALL BE RESPONSIBLE FOR LABOR AND MATERIAL INVOLVED IN THE REMOVAL, MARKOUT AND INSTALLATION OF ALL SIGNS, STRIPING AND PAVEMENT MARKINGS SHOWN HEREON. CONTRACTOR SHALL NOTIFY LADOT CITY–WIDE INVESTIGATION OFFICE AT (213) 928–9612 TEN (10) WORKING DAYS PRIOR TO START OF CONSTRUCTION. UPON COMPLETION OF FINAL MARKOUT, CONTRACTOR SHALL NOTIFY CITY–WIDE INVESTIGATIONS FOR FINAL APPROVAL. STRIPING AND PAVEMENT MARKING SHALL BE IN HOT APPLIED ALKYD THERMOPLASTIC IN ACCORDANCE WITH LADOT SPECIFICATION NOS. 51–005–10 AND 76–012–15. THE FIELD CONDITIONS SHOWN AS EXISTING CONDITION ON THIS PLAN MAY BE CHANGED BETWEEN THE PLAN APPROVAL DATE AND THE IMPLEMENTATION DATE. THE B–PERMITTEE MAY BE REQUIRED TO INSTALL OR REMOVE STRIPING, PAVEMENT MARKINGS, SIGNS OR OTHER TRAFFIC CONTROL DEVICES BEYOND THAT INDICATED ON THIS PLAN, IN ORDER TO FACILITATE THESE CHANGES IN FIELD CONDITIONS AND/OR TO BE IN COMPLIANCE WITH LADOT STANDARDS AND SPECIFICATIONS. CONTRACTOR SHALL INSTALL SIGNS AS DIRECTED BY CITY–WIDE INVESTIGATIONS REPRESENTATIVE.

ESTIMATED MATERIAL FURNISHED BY LADOT

UNITS	MATERIAL

ESTIMATED SALVAGE MATERIAL TO BE RETURNED TO LADOT

UNITS	MATERIAL

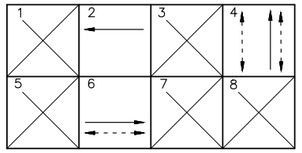

PROPOSED PHASE DIAGRAM

[6] INSTALL 12–PAIR INTERCONNECT CABLE FROM THIS CONTROLLER TO THE CONTROLLER AT 7TH STREET AND PARK VIEW STREET (APPROX. 700').

[7] CHIP INTO BSL FOUNDATION AND INSTALL NEW CONDUIT.

[8] INSTALL ACCESSIBLE PEDESTRIAN SIGNAL PER LADOT STD. DWG. NO. S–73.2.

[9] PROVIDE 4" THICK CONCRETE SLAB IN UNPAVED AREA. FLUSH WITH TOP OF CURB AND EDGE OF SIDEWALK.

[10] CONTRACTOR SHALL CONTACT B–PERMIT INSPECTION/CITY–WIDE INVESTIGATION OFFICE, AT (213) 928–9612, TO ARRANGE FOR FABRICATION OF LARGE STREET NAME SIGNS BY CITY. PERMITTEE SHALL PAY FOR FABRICATION OF SIGNS AND CONTRACTORS SHALL INSTALL SIGNS AS DIRECTED BY CITY–WIDE INVESTIGATIONS REPRESENTATIVE.

[11] CONTRACTOR SHALL CONTACT B–PERMIT INSPECTION/CITY–WIDE INVESTIGATION OFFICE, AT (213) 928–9612, TO COORDINATE REMOVAL OF STOP SIGN (R1–1), PED XING SIGNS AND PAVEMENT MARKINGS AT TIME OF SIGNAL ACTIVATION.

CONDUCTOR SCHEDULE

SIZE No.	CABLE / WIRE	RUN
MULTI	5 CONDUCTOR CABLE 5 X #14	4 1 3 1 2 1 1 3
	9 CONDUCTOR CABLE 8 X #14 & 1 X #12 (COM)	
	13 CONDUCTOR CABLE 12 X #14 & 1 X #12 (COM)	
	28 CONDUCTOR CABLE 27 X #14 & 1 X #10 (COM)	1 1 1 1 1 1 1 1
6	SERVICE	2 2 2 2 2 2 2 2
14	PEDESTRIAN PUSHBUTTON	2 2 2 2 2
18	DLC (2 PR.)	1 1 1 1 3 3
22	I/C (12 PR. EXISTING)	1
22	I/C (12 PR.)	1 1 1 1 1 1
14	APS(5 CONDUCTOR CABLE)	+ + + + + + + +
	CONDUIT SIZE	2" 2" 2" 2" 2" 2" 2" 2" 3" ∗ 3" 3" 2" 2" 3" 2" 2" 2" 3" 3" 3"

∗ – FOR EXISTING CONDUIT RUNS DESIGNATED WITH AN "∗" (ABOVE), CONTRACTOR SHALL ADD/INSTALL NEW CONDUCTORS/CABLES IN EXISTING CONDUIT AS DESIGNATED IN THE CONDUCTOR SCHEDULE. ALL EXISTING CONDUCTORS/CABLES SHALL BE PROTECTED AND MAINTAINED IN EXISTING CONDUIT.

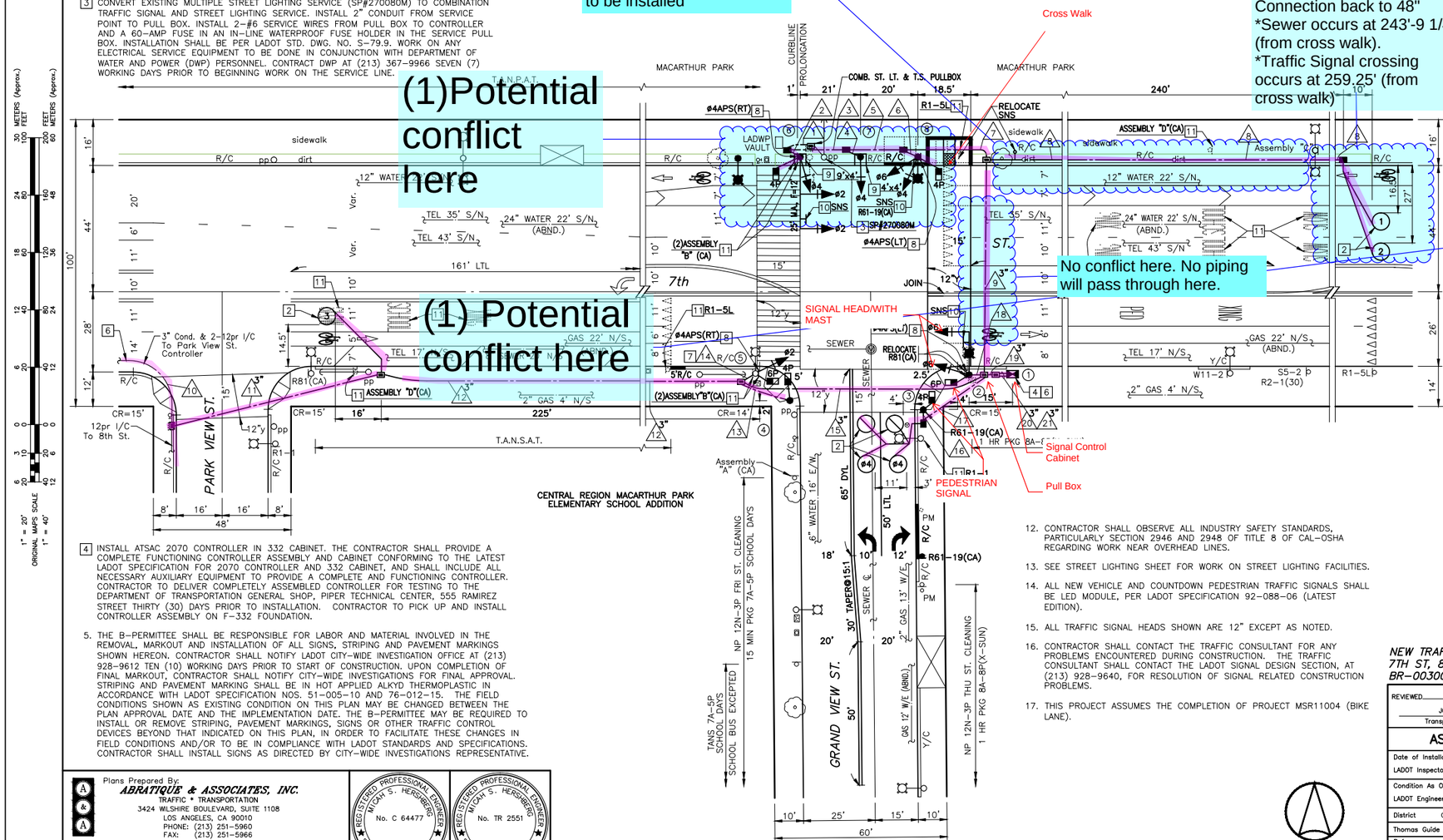

12. CONTRACTOR SHALL OBSERVE ALL INDUSTRY SAFETY STANDARDS, PARTICULARLY SECTION 2946 AND 2948 OF TITLE 8 OF CAL–OSHA REGARDING WORK NEAR OVERHEAD LINES.

13. SEE STREET LIGHTING SHEET FOR WORK ON STREET LIGHTING FACILITIES.

14. ALL NEW VEHICLE AND COUNTDOWN PEDESTRIAN TRAFFIC SIGNALS SHALL BE LED MODULE, PER LADOT SPECIFICATION 92–088–06 (LATEST EDITION).

15. ALL TRAFFIC SIGNAL HEADS SHOWN ARE 12" EXCEPT AS NOTED.

16. CONTRACTOR SHALL CONTACT THE TRAFFIC CONSULTANT FOR ANY PROBLEMS ENCOUNTERED DURING CONSTRUCTION. THE TRAFFIC CONSULTANT SHALL CONTACT THE LADOT SIGNAL DESIGN SECTION, AT (213) 928–9640, FOR RESOLUTION OF SIGNAL RELATED CONSTRUCTION PROBLEMS.

17. THIS PROJECT ASSUMES THE COMPLETION OF PROJECT MSR11004 (BIKE LANE).

NOTICE TO CONTRACTOR

1. EXCEPT WHERE OTHERWISE INDICATED, MATERIALS AND INSTALLATION METHODS SHALL CONFORM TO THE LATEST EDITION, WITH SUPPLEMENTS, OF THE STANDARD SPECIFICATIONS FOR PUBLIC WORKS CONSTRUCTION, ADOPTED BY THE CITY OF LOS ANGELES BOARD OF PUBLIC WORKS (LABPW), INCLUDING THE LATEST VERSION OF THE "BROWN BOOK" ISSUED BY THE LABPW, AND THE LATEST EDITION, WITH AMENDMENTS, OF THE SPECIAL PROVISIONS AND STANDARD DRAWINGS FOR THE INSTALLATION AND MODIFICATION OF TRAFFIC SIGNALS, ISSUED BY THE CITY OF LOS ANGELES DEPARTMENT OF TRANSPORTATION (LADOT).

2. ALL TRAFFIC SIGNAL AND/OR RELATED ELECTRICAL WORK SHALL BE PERFORMED AND INSPECTED UNDER THE CONDITIONS OF THE MOST CURRENT AMENDED BOARD OF PUBLIC WORKS "ENHANCED ELECTRICAL SAFETY POLICY" FOR THE INSTALLATION AND MODIFICATION OF TRAFFIC SIGNALS (RED BOOK), REGARDLESS OF CONTRACT COST.

3. THE LADOT TRAFFIC SIGNAL INSPECTOR AT (213) 485–1071 SHALL BE NOTIFIED THREE (3) WORKING DAYS PRIOR TO THE BEGINNING OF CONSTRUCTION. FOR WORK IN THE AUTOMATED TRAFFIC SURVEILLANCE AND CONTROL (ATSAC) PROJECT AREA, A FIELD MEETING SHALL BE SCHEDULED WITH THE ATSAC PROJECT ENGINEER AT (213) 972–8664 AND THE SIGNAL MAINTENANCE SUPERVISOR AT (213) 485–7721 THREE (3) WORKING DAYS PRIOR TO THE BEGINNING OF CONSTRUCTION. FULL RESTORATION OF THE ATSAC SYSTEM MUST OCCUR WITHIN FIVE (5) WORKING DAYS AFTER SHUT DOWN.

4. REGULAR TRAFFIC SIGNAL CONTROL SHALL BE MAINTAINED FROM 6:00 A.M. TO 9:00 A.M. AND 3:00 P.M. TO 7:00 P.M. ON WEEKDAYS, EXCEPT NATIONAL HOLIDAYS. FLASHING, DEACTIVATION AND ACTIVATION OF SIGNALS SHALL BE ACCOMPLISHED ONLY BY AN LADOT TRAFFIC SIGNAL ELECTRICIAN. ALL ARRANGEMENTS TO DEACTIVATE SIGNAL SHALL BE MADE 24 HOURS IN ADVANCE BY CONTACTING THE LADOT TRAFFIC SIGNAL DEDICATED LINE AT (213) 473–8478 BEFORE 9:00 AM ON NON–HOLIDAY WEEKDAYS. THE LADOT PROJECT NUMBER MUST BE GIVEN AT THIS TIME. THE CONTRACTOR WILL BE CHARGED FOR ALL ELECTRICAL AND TRAFFIC CONTROL SERVICE PROVIDED BY LADOT.

5. ARRANGEMENTS FOR OBTAINING ANY MATERIALS IDENTIFIED TO BE SUPPLIED BY LADOT SHALL BE MADE TEN (10) WORKING DAYS IN ADVANCE BY CONTACTING THE LADOT FIELD OPERATIONS DIVISION AT (213) 928–9620. HOWEVER, TRAFFIC SIGNAL CONTROLLERS REQUIRE THIRTY (30) CALENDAR DAYS ADVANCE NOTICE AND MUST BE PICKED UP WITHIN FIFTEEN (15) CALENDAR DAYS AFTER NOTIFICATION. CONTACT LADOT SIGNAL SHOP AT (213) 473–8468 TO COORDINATE CONTROLLER DELIVERY AND/OR PICKUP.

6. ALL IDENTIFIED TRAFFIC SIGNAL EQUIPMENT SHALL BE RETURNED TO LADOT. ARRANGEMENTS FOR RETURNING IDENTIFIED EQUIPMENT TO LADOT SHALL BE MADE FIVE (5) WORKING DAYS IN ADVANCE BY CONTACTING THE LADOT MATERIAL CONTROL DIVISION AT (213) 928–9636.

7. ALL EXISTING TRAFFIC CONTROL SIGNING SHALL BE MAINTAINED WITH STANDARD SIGN BRACKETS BY THE CONTRACTOR, EXCEPT WHERE OTHERWISE INDICATED, EXISTING LARGE STREET NAME SIGNS ON MAST ARM TYPE STANDARDS SHALL BE RELOCATED FROM THE VERTICAL POLE TO THE MAST ARM PER LADOT STANDARD DRAWING NO. S–457.0 AND S–486.0. THE CONTRACTOR SHALL COORDINATE WITH LADOT SIGN SHOP AT (213) 485–8918 FOR ANY REQUIRED LARGE STREET NAME SIGNS. ANY TRAFFIC CONTROL SIGNING DAMAGED OR LOST BY THE CONTRACTOR SHALL BE REPLACED AT THE CONTRACTOR'S EXPENSE. SIGNAL CONTRACTOR SHALL INSTALL MAST ARM MOUNTED SIGNS.

8. THE CONTRACTOR SHALL FURNISH AND INSTALL, AS SHOWN ON THE PLANS, ALL TRAFFIC SIGNAL EQUIPMENT SUCH AS STANDARDS, MAST ARMS, SIGNAL HEADS, AND OTHER EQUIPMENT AS REQUIRED. ALL SUCH EQUIPMENT SHALL BE NEW. ALL VEHICLE HEAD EQUIPMENT SUPPLIED BY THE CONTRACTOR SHALL HAVE 1½ INCH DIAMETER PIPE FIT MOUNTING HARDWARE, INCLUDING ALL TOP POST MOUNT HEADS. PED HEAD MODULE REPLACEMENTS SHOWN ON THE PLAN SHALL REQUIRE A COMPLETE INSTALLATION, INCLUDING NEW PED HEAD AND TERMINAL COMPARTMENT. LEFT TURN SIGNAL HEADS ON MAST ARMS WITH TWO OR MORE SIGNAL HEADS SHALL BE TOP MOUNTED.

Scale: 1"=20'
North/South: GRAND VIEW ST.

Plans Prepared By
ADRATIQUE & ASSOCIATES, INC.
TRAFFIC * TRANSPORTATION
3424 WILSHIRE BOULEVARD, SUITE 1108
LOS ANGELES, CA 90010
PHONE: (213) 251–5960
FAX: (213) 251–5966

MICAH S. HERSHBERG 02–16–12 RCE No. C 64477 date
MICAH S. HERSHBERG 02–16–12 RTE No. TR 2551 date

REGISTERED PROFESSIONAL ENGINEER MICAH S. HERSHBERG No. C 64477 STATE OF CALIFORNIA CIVIL
REGISTERED PROFESSIONAL ENGINEER MICAH S. HERSHBERG No. TR 2551 STATE OF CALIFORNIA TRAFFIC

CITY OF LOS ANGELES BUSINESS TAX REGISTRATION NO: 020523–32

NEW TRAFFIC SIGNAL
7TH ST, 8TH ST, PARK VIEW ST AND GRAND VIEW STREET
BR–003009

REVIEWED FEBRUARY 22, 20 12
JOHN VARGHESE
Transportation Engineer

RECOMMENDED 20
Senior Transportation Engineer

ACCEPTED FEBRUARY 22, 2012
JUDY WONG
Principal Transportation Engineer

AS BUILT
Date of Installation: 3–19–13
LADOT Inspector: L. BARRERA
Condition As Of:
LADOT Engineer:
District CD–1 CENTRAL
Thomas Guide 634 C3
References
FIELD CHECK
GEO. DWG. A–5718

CITY OF LOS ANGELES
DEPARTMENT OF TRANSPORTATION
JAIME DE LA VEGA, General Manager

TITLE
7th ST. & GRAND VIEW ST.

File Name *05835–X1.DWG*
Intersection No. *05835*
Project No. *30646*

NOTICE: IF PLAN HAS NOT BEEN IMPLEMENTED WITHIN TWO (2) YEARS OF THE APPROVAL DATE, IT MUST BE RESUBMITTED TO LADOT SIGNAL DESIGN SECTION FOR REVIEW AND APPROVAL.

SCALES	HORIZ. 1"= VERT. 1"=	SHEET 1 OF 1	INDEX NUMBER

(LADOT Revised 6/04)
(Drafting Std. 11/04)

NO.	REVISION DESCRIPTION	DIV./DIST. ENGR. DATE

	DATE	BY
TIMING	04–26–11	EY
DISTRICT	05–13–10	MM
GEOMETRIC		
ATSAC		
MAJOR CONTR		

	DATE	BY
SUPERVISOR	05–05–10	FLA
DESIGNER		
SR. DRAFTING		
DRAFTING		
FIELD		
BASE	PLOT DATE	

SIGNAL STANDARD SCHEDULE

No.	TYPE	FOUND. TYPE	PED. PUSH BUT'N TYPE	PHASE	REMARKS
(X) (1)	332 CAB.	F-332	–	–	SEE NOTE 1
* (X) (2)	CD929C-7	BSL	–	–	
* (X) (3)	7	F-7	APS	4	REPLACE PPB W/APS
* (X) (4)	CD953	BSL	–	–	
* (X) (5)	9	F-1	–	–	
* (X) (6)	7	F-7	APS	8	REPLACE PPB W/APS
* (X) (7)	1	F-1	–	–	
* (X) (8)	16	F-2	APS	8	REPLACE PPB W/APS
(X) (9)	1A	F-1	–	–	
* (X) (10)	CD929	BSL	APS	4	REPLACE PPB W/APS

* Existing

ESTIMATED MATERIAL FURNISHED BY LADOT

UNITS	MATERIAL
1	2070 CONTROLLER IN 332 CABINET

ESTIMATED SALVAGE MATERIAL TO BE RETURNED TO LADOT

UNITS	MATERIAL
1	CONTROLLER

Project will not interfere with the conduit here

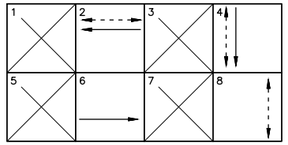

PROPOSED PHASE DIAGRAM

CONDUCTOR SCHEDULE

SIZE No.	CABLE/WIRE	RUN
MULTI	3 CONDUCTOR CABLE 3 X #14	
	5 CONDUCTOR CABLE 5 X #14	1 1 1 1 1 1 1 1
	9 CONDUCTOR CABLE 8 X #14 & 1 X #10 (COM)	
	13 CONDUCTOR CABLE 12 X #14 & 1 X #10 (COM)	1 1 1
	28 CONDUCTOR CABLE 27 X #14 & 1 X #10 (COM)	1 1 1
6	SERVICE (EXISTING)	2
8	SERVICE	
12	BUS DLC (1-PAIR)	
18	DLC (2 PAIR)	
18	DLC (3 PAIR)	1 1
18	DLC (4 PAIR)	
14	DLC (EXISTING)	
	I/C (EXISTING)	3
22	I/C (12 PR)	
22	I/C (25 PR)	
22	I/C (50 PR)	
	VIDEO FIBER (12 SM)	
	CCTV CABLE	
	FIBER OPTIC	
	PULL ROPE	
		* * * * * * * * * 3"

*** FOR EXISTING CONDUIT RUNS DESIGNATED WITH AN "*" (ABOVE), THE CONTRACTOR SHALL ADD/INSTALL NEW CONDUCTORS/CABLES AND PROTECT AND MAINTAIN ALL EXISTING CONDUCTORS/CABLES.**

NOTES :

1. SEMI-ACTUATED OPERATION
   (ATSAC 2070 CONTROLLER)

   ø2 – 7TH ST. W/B & N/S PED. XING
   ø4 – PARK VIEW ST. S/B & W/S PED. XING
   ø6 – 7TH ST. E/B
   ø8 – E/S PED. XING

   WILSHIRE EAST ATSAC SYSTEM
   ATSAC CABLE INTERCONNECT

2 REMOVE CONTROLLER, CABINET, TYPE 8 STANDARD AND FOUNDATION; ABANDON CONDUITS.

3 JOIN AND EXTEND CONDUIT(S) INTO PULLBOX.

4 INTERCEPT CONDUITS AND INSTALL PULLBOX.

5 REPLACE EXISTING PEDESTRIAN PUSHBUTTON WITH ACCESSIBLE PEDESTRIAN SIGNAL (APS) TYPE PUSHBUTTON PER L.A.D.O.T. STANDARD DWG. NO. S-73.2.

6 INSTALL A 5-CONDUCTOR CABLE TO CONNECT THE ACCESSIBLE PEDESTRIAN SIGNAL (APS) PUSHBUTTON TO THE PEDESTRIAN HEAD THAT HAS THE SAME PHASE.

7 PULL A NEW 3-PAIR DLC TO CONNECT NEW LOOP WIRES NEW STUB-OUT.

8 PULL ALL EXISTING CABLES BACK TO A SAFE LOCATION DETERMINED BY ENGINEER DURING THE INSTALLATION OF NEW PULLBOX AND CONTROLLER CABINET. REINSTALL ALL CABLES TO NEW CONTROLLER CABINET THROUGH NEW CONDUITS.

9 INSTALL/REMOVE STRIPING AND/OR PAVEMENT MARKING(S) AS SHOWN. NOTIFY L.A.D.O.T. ATSAC PROJECT ENGINEER AT (213) 972-8664 AT LEAST TEN (10) WORKING DAYS PRIOR TO ANY STRIPING/PAVEMENT CHANGES.

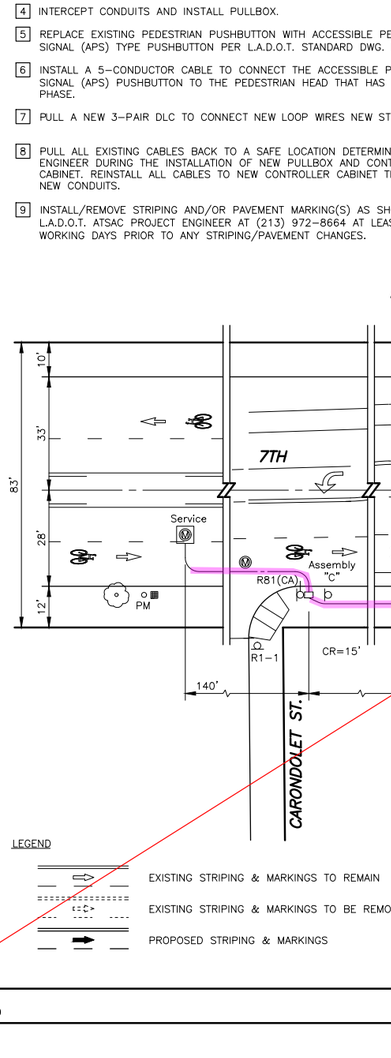

LEGEND

EXISTING STRIPING & MARKINGS TO REMAIN

EXISTING STRIPING & MARKINGS TO BE REMOVED

PROPOSED STRIPING & MARKINGS

NOTICE TO CONTRACTOR

1. EXCEPT WHERE OTHERWISE INDICATED, MATERIALS AND INSTALLATION METHODS SHALL CONFORM TO THE LATEST EDITION AND SUPPLEMENTS OF THE STANDARD SPECIFICATIONS OF PUBLIC WORKS CONTRUCTION ("GREENBOOK") AND THE CORRESPONDING ADDITIONS AND AMENDMENTS THAT ARE LISTED IN THE "BROWN BOOK" AS APPROVED BY THE CITY OF LOS ANGELES' BOARD OF PUBLIC WORKS, AND THE LATEST EDITION, WITH AMENDMENTS OF THE SPECIAL PROVISIONS AND STANDARD DRAWINGS FOR THE INSTALLATION AND MODIFICATION OF TRAFFIC SIGNALS ISSUED BY THE CITY OF LOS ANGELES DEPARTMENT OF TRANSPORTATION (L.A.D.O.T.).

2. ALL TRAFFIC SIGNAL AND/OR RELATED ELECTRICAL WORK SHALL BE PERFORMED AND INSPECTED UNDER THE CONDITIONS OF THE MOST CURRENT AMENDED BOARD OF PUBLIC WORKS "ENHANCED ELECTRICAL SAFETY POLICY" AS REQUIRED IN L.A.D.O.T.'S SPECIAL PROVISIONS AND STANDARD DRAWINGS FOR THE INSTALLATION AND MODIFICATION OF TRAFFIC SIGNALS (RED BOOK), REGARDLESS OF CONTRACT COST.

3. THE LADOT TRAFFIC SIGNAL INSPECTOR AT (818) 756-7852 SHALL BE NOTIFIED THREE (3) WORKING DAYS PRIOR TO THE BEGINNING OF CONSTRUCTION. FOR WORK IN THE AUTOMATED TRAFFIC SURVEILLANCE AND CONTROL (ATSAC) PROJECT AREA, A FIELD MEETING SHALL BE SCHEDULED WITH THE ATSAC PROJECT ENGINEER AT (213) 972-8664 AND THE SIGNAL MAINTENANCE SUPERVISOR AT (818) 756-7846 THREE (3) WORKING DAYS PRIOR TO THE BEGINNING OF CONSTRUCTION. FULL RESTORATION OF THE ATSAC SYSTEM MUST OCCUR WITHIN FIVE (5) WORKING DAYS AFTER SHUT DOWN.

4. REGULAR TRAFFIC SIGNAL CONTROL SHALL BE MAINTAINED FROM 6:00 A.M. TO 9:00 A.M. AND 3:00 P.M. TO 7:00 P.M. ON WEEKDAYS, EXCEPT NATIONAL HOLIDAYS. FLASHING, DEACTIVATION AND ACTIVATION OF SIGNALS SHALL BE ACCOMPLISHED ONLY BY A LADOT TRAFFIC SIGNAL ELECTRICIAN. ALL ARRANGEMENTS TO DEACTIVATE SIGNAL SHALL BE MADE 24 HOURS IN ADVANCE BY CONTACTING THE LADOT TRAFFIC SIGNAL DEDICATED LINE AT (213) 473-8469 BEFORE 9:00 AM ON NON-HOLIDAY WEEKDAYS. THE LADOT PROJECT NUMBER MUST BE GIVEN AT THIS TIME. THE CONTRACTOR WILL BE CHARGED FOR ALL ELECTRICAL AND TRAFFIC CONTROL SERVICE PROVIDED BY LADOT.

5. ARRANGEMENTS FOR OBTAINING ANY MATERIALS IDENTIFIED TO BE SUPPLIED BY LADOT SHALL BE MADE TEN (10) WORKING DAYS IN ADVANCE BY CONTACTING THE LADOT FIELD OPERATIONS DIVISION AT (213) 928-9620. HOWEVER, TRAFFIC SIGNAL CONTROLLERS REQUIRE THIRTY (30) CALENDAR DAYS ADVANCE NOTICE AND MUST BE PICKED UP WITHIN FIFTEEN (15) CALENDAR DAYS AFTER NOTIFICATION. CONTACT LADOT SIGNAL SHOP AT (213) 473-8464 TO COORDINATE CONTROLLER DELIVERY AND/OR PICKUP.

6. ALL IDENTIFIED TRAFFIC SIGNAL EQUIPMENT SHALL BE RETURNED TO LADOT. ARRANGEMENTS FOR RETURNING IDENTIFIED EQUIPMENT TO LADOT SHALL BE MADE FIVE (5) WORKING DAYS IN ADVANCE BY CONTACTING THE LADOT MATERIAL CONTROL DIVISION AT (213) 928-9636.

7. ALL EXISTING TRAFFIC CONTROL SIGNING SHALL BE MAINTAINED WITH STANDARD SIGN BRACKETS BY THE CONTRACTOR. EXCEPT WHERE OTHERWISE INDICATED, EXISTING LARGE STREET NAME SIGNS ON MAST ARM TYPE STANDARDS SHALL BE RELOCATED FROM THE VERTICAL POLE TO THE MAST ARM PER LADOT STANDARD DRAWING NO. S-457.0. THE CONTRACTOR SHALL COORDINATE WITH LADOT SIGN SHOP AT (213) 473-7954 FOR ANY REQUIRED LARGE STREET NAME SIGNS. ANY TRAFFIC CONTROL SIGNING DAMAGED OR LOST BY THE CONTRACTOR SHALL BE REPLACED AT THE CONTRACTOR'S EXPENSE. SIGNAL CONTRACTOR SHALL INSTALL MAST ARM MOUNTED SIGNS.

8. THE CONTRACTOR SHALL FURNISH AND INSTALL, AS SHOWN ON THE PLANS, ALL TRAFFIC SIGNAL EQUIPMENT SUCH AS STANDARDS, MAST ARMS, SIGNAL HEADS, AND OTHER EQUIPMENT AS REQUIRED. ALL SUCH EQUIPMENT SHALL BE NEW. ALL SUCH EQUIPMENT SHALL BE IN ACCORDANCE WITH THE LATEST EDITION OF THE SIGNAL MANUAL. ALL VEHICLE HEAD EQUIPMENT SUPPLIED BY THE CONTRACTOR SHALL HAVE 1-1/2 INCH DIAMETER PIPE FIT MOUNTING HARDWARE, INCLUDING ALL TOP POST MOUNT HEADS. PED HEAD MODULE REPLACEMENTS SHOWN ON THE PLAN SHALL REQUIRE A COMPLETE INSTALLATION, INCLUDING NEW PED HEAD AND TERMINAL COMPARTMENT. LEFT TURN SIGNAL HEADS ON MAST ARMS WITH TWO OR MORE SIGNAL HEADS SHALL BE TOP MOUNTED.

REGISTERED PROFESSIONAL ENGINEER MANOOCHEHR ADHAMI No. 69854 CIVIL STATE OF CALIFORNIA

WILSHIRE EAST ATCS

SUBMITTED April 15, 20 14 — Transportation Engineer

APPROVED APRIL 15 20 16 — Senior Transportation Engineer

AS BUILT

Date of Installation: 09-01-15
LADOT Inspector:
Condition As Of:
LADOT Engineer:
District CENTRAL
Thomas Guide 634-B3
References
Proj No.: 73002
Geo. No.: A-5718-3 & A-5170
Field Check

CITY OF LOS ANGELES
DEPARTMENT OF TRANSPORTATION
Jon Kirk Mukri, General Manager

TITLE

7TH ST. & PARK VIEW ST.

File Name: *05830-WIL-EAST-087(AB)*
Intersection No.: *05830*
Proj. No.: *TGF12049*

NOTICE: IF PLAN HAS NOT BEEN IMPLEMENTED WITHIN TWO (2) YEARS OF THE APPROVAL DATE, IT MUST BE RESUBMITTED TO LADOT SIGNAL DESIGN SECTION FOR REVIEW AND APPROVAL.

AS BUILT

PREPARED BY:	DYNALECTRIC/ BILL SLOCUM (CONTRACTOR)	03-21-16 (DATE)
REVIEWED BY:	BENJAMIN ALMEDA (CONTRACT ADMIN. INSPECTOR)	04-26-16 (DATE)
APPROVED BY:	KYLE FLAKE (L.A.D.O.T. CONSTRUCTION ENGINEER)	05-23-16 (DATE)
DRAFTED BY:	E.ICHAVEZ (CIVIL ENGINEERING DRAFTING TECHNICIAN)	11-08-21 (DATE)

SCALES	HORIZ. 1"=
	VERT. 1"=

SHEET 31 OF 61

INDEX NUMBER **D-34463**

(LADOT Revised 5/05)

NO.	REVISION DESCRIPTION	DIV./DIST. ENGR. DATE

	BY	DATE
SUPERVISOR	DPTN	09-24-13
DESIGNER	LTL	09-17-13
SR. DRAFTING	ARH	09-20-13
DRAFTING	KL	09-20-13
FIELD	LTL	09-10-13
BASE	KL	09-11-13

	BY	DATE
STAR	EY	03-25-14
DISTRICT		
GEOMETRIC		
ATSAC		
METRO RAIL		
TRANSIT PRIORITY		

THE CITY OF LOS ANGELES OR ITS OFFICERS OR AGENTS SHALL NOT BE RESPONSIBLE FOR THE ACCURACY OR COMPLETENESS OF ELECTRONIC COPIES OF THIS PLAN SHEET.

PREFABRICATED PEDESTRIAN BRIDGE, SEE LANDSCAPE AND STRUCTURAL SHEETS FOR DETAILS

RISER AND ATRIUM GRATE INLET TO TERRACED GARDENS

APPROXIMATE LOCATION, BORING B-1

PROPOSED TERRACED GARDENS, SEE SHEET CB103 FOR GRADING

MACARTHUR PARK LAKE

DIVERSION LINE DISCHARGE CONNECTION AT LAKE

24" RCP STORM DRAIN DIVERSION LINE: DISCHARGE TO LAKE (GRAVITY)

APPROXIMATE LOCATION, BORING B-6

6" DIP RECIRCULATION LINE TO TERRACED GARDENS (PRESSURE)

24" FLOW METER (MV1)

6" METER VAULT W/ ACTUATED VALVE (VMV3)

STANDARD TYPE I MANHOLE 'EZ' PER LA BOE STANDARD PLAN S-381-0 (MH1)

STORMFILTER SECONDARY STORMWATER TREATMENT UNITS (STU1)

24" ACTUATED VALVE (VV1)

PRESSURE-TO-GRAVITY TRANSITION MANHOLE (TS1)

DISTRIBUTION MANHOLE, MODIFIED TYPE I MANHOLE 'EZ' PER LA BOE STANDARD PLAN S-381-0

STANDARD TYPE I MANHOLE 'EZ' PER LA BOE STANDARD PLAN S-381-0 (MH2)

APPROXIMATE LOCATION, BORING B-2

MODIFIED TYPE I MANHOLE 'EZ' PER CITY OF LA STANDARD PLAN S-381-0 (MH5)

18" DIP STORM DRAIN DIVERSION LINE (PRESSURE)

IMPROVEMENTS TO EXISTING PUMP HOUSE, SEE MECHANICAL AND ELECTRICAL SHEETS

12" METER VAULT w/ ACTUATED VALVE (VMV2)

NEW 16" ACTUATED VALVE IN EXISTING VALVE VAULT (VV2)

APPROXIMATE LOCATION, BORING B-5

24" ACTUATED VALVE (VV3)

MACARTHUR PARK

Cross Walk

243'-9 1/4"

(15.5') ±

NEW CONCRETE WALKWAY, SEE SHEET CB104 FOR GRADING

NEW 18'-0" WIDE CONCRETE DRIVEWAY PER LA BOE STANDARD PLAN S-440-4, CASE 1

Would require depth of LADOT Facility

7TH STREET

(60') ±

(44.5') ±

(100') ±

(40') ±

(25.5') ±

(14.5') ±

18" DIP STORM DRAIN DIVERSION LINE (PRESSURE)

24" RCP STORM DRAIN RETURN LINE (GRAVITY)

Would require depth of LADOT Facility

RECIRCULATION LINE CONNECTION AT EXISTING 6" DIP IRRIGATION MAIN

FLOW METER (MV2)

12" RCP SANITARY SEWER RETURN LINE (GRAVITY)

STANDARD TYPE I MANHOLE 'EZ' PER LA BOE STANDARD PLAN S-381-0 (MH3),(MH4)

APPROXIMATE LIMITS OF WORK, TYP.

STANDARD TYPE I MANHOLE 'EZ' PER LA BOE STANDARD PLAN S-381-0 (MH8)

(40.5') ±

(20') ±

(20') ±

SADDLE CONNECTION TO EXISTING 48" SANITARY SEWER PER LA BOE STANDARD PLAN B-3334

VALVE AND METER VAULT STRUCTURE (VMV1)

S PARK VIEW STREET

S GRAND VIEW STREET

S LAKE STREET

WET WELL PUMP STATION (WWPS1)

STANDARD TYPE I MANHOLE 'EZ' PER LA BOE STANDARD PLAN S-381-0 (MH6),(MH7)

(8') ±

(27') ±

(12') ±

(13') ±

(35') ±

(25') ±

(60') ±

EX 54" RCP STORM DRAIN

CDS PRETREATMENT UNIT (PT1)

DIVERSION STRUCTURE (DS1)

EX 45" RCP STORM DRAIN

CONNECT TO EXISTING 54" STORM DRAIN PER LA BOE STANDARD PLAN B-3334

Typ: ROW dimensions are exact. No plus/minus.
Typ: No parenthesis for ROW dimensions

+ This sheet is unnecessary and duplicate to plan/profile sheets. Delete sheet

CIVIL SITE PLAN

SCALE: 1" = 30'

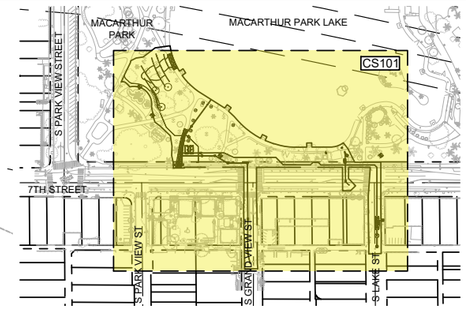

KEY MAP
NO SCALE

30' 0 30' 60'
SCALE: 1" = 30'

REVISION DATES (DESIGN STAGE ONLY)

SHEET VERSION 4.0.1 FILE PATH: C:\PW_WORKING\CAROLLO_200000\D0225890\202137000S102.DWG PLOT DATE: 5/15/2024 5:48 PM SAVED: 5/15/2024 5:47 PM SAVED BY:SHANESASAKI

100% DESIGN SUBMITTAL - NOT FOR CONSTRUCTION 06/14/2024

ENGINEERING
CITY OF LOS ANGELES
LASANITATION

THIS PLAN WAS ELECTRONICALLY SIGNED AND STAMPED

BUREAU OF SANITATION
CITY OF LOS ANGELES DEPARTMENT OF PUBLIC WORKS

VERTICAL CONTROL:
HORIZONTAL CONTROL:

SHEET TITLE: CIVIL SITE PLAN
PROJECT: MACARTHUR LAKE STORMWATER CAPTURE PROJECT
ADDRESS: MACARTHUR PARK 2230 6TH ST LOS ANGELES CA 90057

NO	REVISIONS	DATE	BY

CIP NO. XXXX

INDEX NO. D-XXXXX

craftwater engineering, inc.

carollo

DESIGN GROUP	DATE
ENGINEER:	
ARCHITECT:	
DESIGNED BY:	
DRAWN BY:	
CHECKED BY:	
APPROVED BY:	

WORK ORDER
S343MSWC

SHEET NAME
CS102
SHEET XX OF XX SHEETS

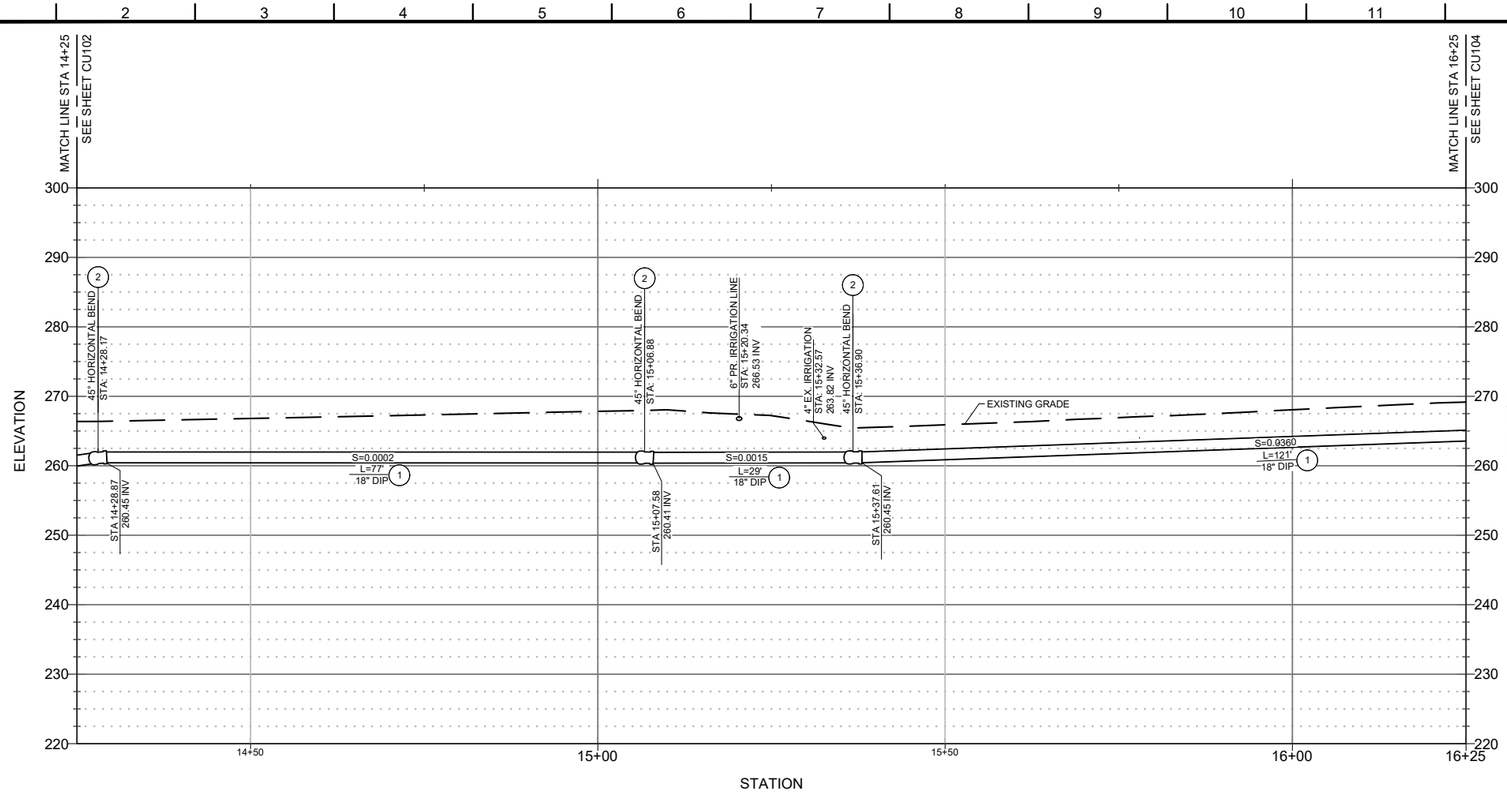

PROFILE VIEW: STORM DRAIN DIVERSION LINE (STA 14+25 TO STA 16+25)

HORIZONTAL SCALE: 1" = 10'
VERTICAL SCALE 1" = 10'

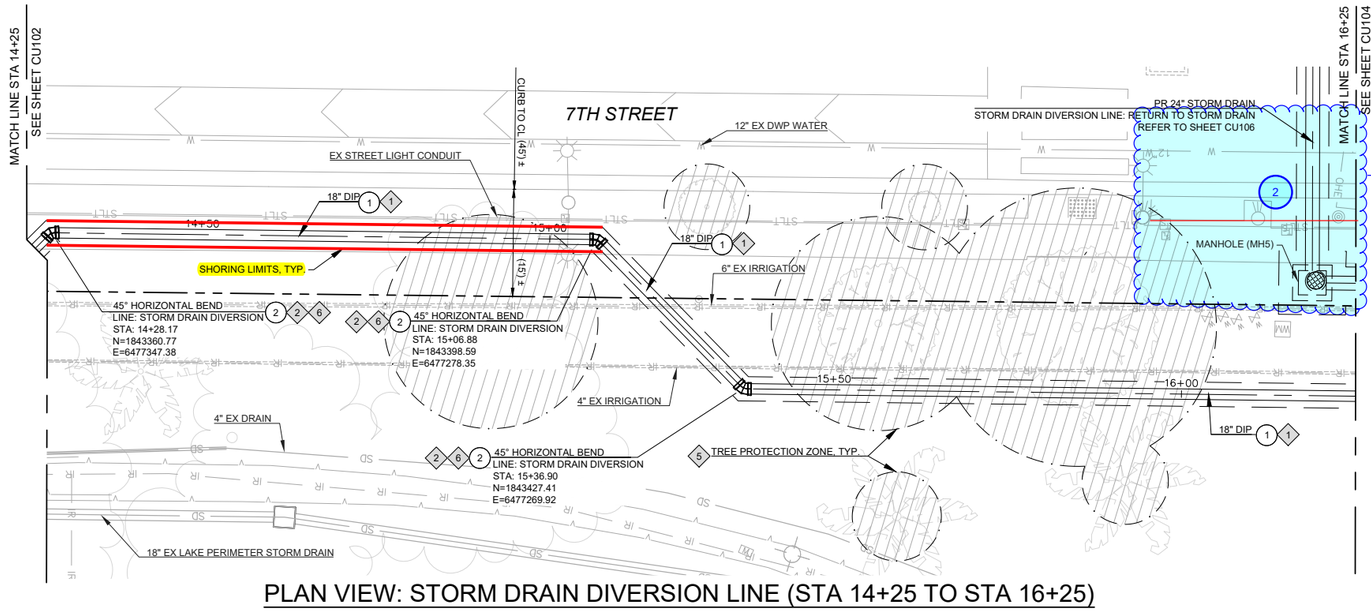

PLAN VIEW: STORM DRAIN DIVERSION LINE (STA 14+25 TO STA 16+25)

SCALE: 1" = 10'

10' 0 10' 20'
1" = 10'

LEGEND

- (1) CONSTRUCTION NOTE
- ⟨1⟩ KEY NOTE
- TREE PROTECTION ZONE, SEE SHEET LS100

CONSTRUCTION NOTES

1. NEW 18" DIP STORM DRAIN. SEE KEY NOTE 1.
2. 45 DEGREE HORIZONTAL DI BEND. SEE KEY NOTES 2 AND 6.

KEY NOTES

1. REFER TO CITY OF LOS ANGELES STANDARD PLANS S-251 (CASE II) FOR TRENCHING DETAIL AND S-253 FOR PIPE CROSSING SUPPORT DETAIL WHEN APPLICABLE. SEE SPECIFICATION SECTION 02310 FOR BEDDING MATERIALS.
2. FITTINGS WILL FOLLOW ANSI/ AWWA C110/A21.10 STANDARD.
3. ALL EXISTING UTILITIES TO BE PROTECTED IN PLACE UNLESS OTHERWISE NOTED.
4. INVERTS OF EX UTILITIES SHOWN IN PROFILE ARE APPROXIMATE BASED ON STANDARD BURIAL DEPTHS AND AS-BUILT DRAWINGS AND SHOULD BE VERIFIED IN THE FIELD.
5. TREE PROTECTION ZONE, TYP. ALL EXCAVATION WITHIN TREE PROTECTION ZONES ARE SUBJECT TO SPECIAL REQUIREMENTS AND RESTRICTIONS. SEE PROTECTION REQUIREMENTS SHEET LS100.
6. THE CONTRACTOR SHALL PROVIDE THRUST BLOCKS FOR ALL DI BENDS PER LOS ANGELES COUNTY WATERWORKS DISTRICTS STANDARD PLAN W-21.

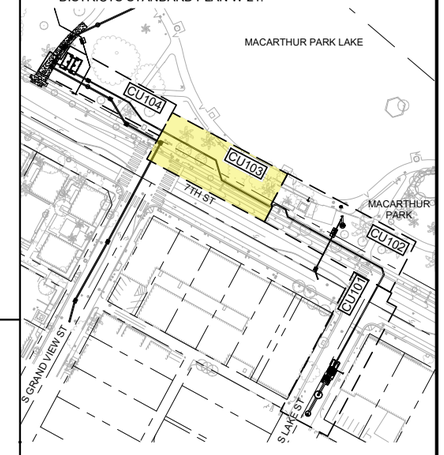

KEY MAP

NO SCALE

ENGINEERING
CITY OF LOS ANGELES
LASANITATION
CITY OF LOS ANGELES

PROFESSIONAL ENGINEER * REGISTERED * CIVIL * STATE OF CALIFORNIA * C 84417

THIS PLAN WAS ELECTRONICALLY SIGNED AND STAMPED

BUREAU OF SANITATION
DEPARTMENT OF PUBLIC WORKS
CITY OF LOS ANGELES

VERTICAL CONTROL:
HORIZONTAL CONTROL:

SHEET TITLE: PLAN & PROFILE - STORM DRAIN DIVERSION LINE STA 14+25 TO STA 16+25
PROJECT: MACARTHUR LAKE STORMWATER CAPTURE PROJECT
ADDRESS: MACARTHUR PARK 2230 6TH ST LOS ANGELES CA 90057

NO	REVISIONS	DATE	BY

CIP NO. XXXX

INDEX NO. D-XXXXX

craftwater engineering, inc.

carollo

DESIGN GROUP	DATE
ENGINEER:	
ARCHITECT:	
DESIGNED BY:	
DRAWN BY:	
CHECKED BY:	
APPROVED BY:	

WORK ORDER
S343MSWC

SHEET NAME
CU103
SHEET XX OF XX SHEETS

THE CITY OF LOS ANGELES OR ITS OFFICERS OR AGENTS SHALL NOT BE RESPONSIBLE FOR THE ACCURACY OR COMPLETENESS OF ELECTRONIC COPIES OF THIS PLAN SHEET.

REVISION DATES (DESIGN STAGE ONLY)

100% DESIGN SUBMITTAL - NOT FOR CONSTRUCTION 06/14/2024

22311 Brookhurst Street Suite 203
Huntington Beach Ca 92646

LEASE

THIS IS AN AT&T CALIFORNIA OWNERSHIP OF FACILITY

April 10, 2024

City of Los Angeles
Public Works-Engineering
Attn: Verenice Hernandez, MS 501
1149 S. Broadway, Suite 140
Los Angeles, CA 90015

Re: WO. S33WMLRP, MacArthur Lake Stormwater Capture, Los Angeles, CA

Dear Ms. Hernandez,

This is in response to your Inquiry Letter dated March 28, 2024, regarding the above referenced project. **THE UTILITY CLEARANCE FORM NEEDS TO COME FROM AT&T CALIFORNIA, THEY OWN THE CONDUIT FACILITY.**

Please be advised that AT&T Network Services has an active Transcontinental Fiber Optic Cable (long distance), in LEASED CONDUIT from **AT&T California (SBC – PAC BELL)** in close proximity to your project. For detailed conduit prints or information, you need to contact **AT&T California (SBC - PAC BELL)**. **AT&T's cable route and drawing is Sherman Oaks to Los Angeles FTA WR 33784-15.**

Locating and pot-holing of AT&T's facilities can be arranged by contacting USA Dig Alert at 1-800-227-2600 for Southern California.

Future inquiries for AT&T Facilities in Southern California, Southern Nevada, and Arizona should be directed to:

AT&T INQUIRIES
22311 Brookhurst Street, Suite 203
Huntington Beach, CA 92646
joef@forkertengineering.com

Should you have any questions or concerns regarding this project, please contact Mr. Joseph Forkert at (714) 963-7964 or me at your earliest convenience.

Sincerely,

Joseph Forkert for
Tanya Hernandez
OSP Maintenance Engineer
(619) 200-7896

LOS ANGELES

ST. AVE. ST. AVE. BLVD. AVE.

NOTE:
CALL PACIFIC BELL MAINTENANCE SUPERVISOR ROGER STEMPEL PHONE: (818)242-4104 AND SPLICING SUPERVISOR ERNIE LINAREZ PHONE: (818)247-0036 24 HOURS PRIOR TO START OF CONSTRUCTION

ST. LITTLE INGRAHAM ST.

M.H. 4759 15'x5'6"x15'

M.H. 4762 10'x5'6"x6'6"

M.H. 4450 6'5"x4'x9'

M.H. 4774 9'x4'x6'2"

M.H. 4776 9'x4'x6'

M.H. 4778 9'x4'x6'

M.H. 4782 9'x4'x6'

580' W.W. 472' W.W. 189' W.W. 396' W.W. 588' W.W. ST. 388' W.W. 386' W.W.

SEE DWG. 16

30 30

M.H. 4752

W. WALL LOOK. W. E. WALL LOOK. E.

M.H. 4763

W. WALL LOOK. W. E. WALL LOOK. E.

PRESSURE PIPES M.H. 4450

W. WALL LOOK. W. E. WALL LOOK. E.

M.H. 4774

W. WALL LOOK. W. E. WALL LOOK. E.

M.H. 4778

W. WALL LOOK. W. E. WALL LOOK. E.

M.H. 4782

W. WALL LOOK. W. E. WALL LOOK. E.

M.H. 4776

W. WALL LOOK. W. E. WALL LOOK. E.

CEILING FAILING M.H. TO BE REBUILT

C.S. REEL 9559 7-11R. 2 CSW

M.H. 4782

LAKE ST. ALVARADO WESTLAKE BONNIE BRAE BURLINGTON BEACON AVE. UNION ST.

L.G. REEL L10
-036-XXX/021-XXX
8631'F

M.H. 4900 TO M.H. 4782

REVISIONS:
ISSUE 1 - OCT. 9, 1986
ISSUE 2 - JAN. 7, 1987

AS BUILT
4-16-87

SCALE: 1" = 200'±

PROPRIETARY
USE PURSUANT TO COMPANY INSTRUCTIONS

AUTH. NO.: J7164/LA71Y
GEO. CODE: L56ZFAE/B56ZFAE
OWNERSHIP: 67% ISD/33% IXC
ACCOUNT CODE: 85C
LINE CODE: F364
CLLI. CODE: SHOK CA. U0030
CABLE TYPE: 4 DAX-030

ENGR.: JAMES A. ORTIZ
PHONE: (415) 460-6664

PREPARED BY:
CLIFFORD A. FORKERT
Civil Engineer
22311 Brookhurst St, Suite I
Huntington Beach, California 92646
Phone: (714) 963-6793

AT&T M

LIGHTGUIDE SYSTEM
SHERMAN OAKS C.O. 02
TO
LOS ANGELES C.O. 03

CABLE RECORD MAP

WR 33784 - 15

LOS

ST. ST. ST. ST. AVE. ST. AVE. ST.

MACARTHUR PARK

M.H. 22186 4½'×6'×8'

M.H. 4467 9'×4'×8'

M.H. 4739 9'×4'×7½'

M.H. 4752 15'×5½'×15'

M.H. 4762 10'×5½'×6½'

M.H. 4450 6'5"×4'×9'

M.H. 4774 9'×4'×6'2"

LITTLE ST.

NOTE:
CALL PACIFIC BELL MAINTENANCE SUPERVISOR ROGER STEMPEL PHONE: (818)242-4104 AND SPLICING SUPERVISOR ERNIE LINAREZ PHONE: (818)247-0036 24 HOURS PRIOR TO START OF CONSTRUCTION

7TH

525' W.W.F. 588' W.W.F. 582' W.W.F. 580' W.W. 472' W.W. 189' W.W. 396' W.W.

M.H. 22186

W.WALL LOOK. W. E.WALL LOOK. E.

M.H. 4467

W.WALL LOOK. W. E.WALL LOOK. E.

M.H. 4755

W.WALL LOOK. W. E.WALL LOOK. E.

M.H. 4753

W.WALL LOOK. W. E.WALL LOOK. E.

M.H. 4765

W.WALL LOOK. W. E.WALL LOOK. E.

PRESSURE PIPES M.H. 4450

W.WALL LOOK. W. E.WALL LOOK. E.

M.H. 4774

W.WALL LOOK. W. E.WALL LOOK. E.

M.H. 4:

W.WALL LOOK. W. E

CEILING FAILING M.H. TO BE REBUILT

ST. CORONADO ST. CARONDELET ST. PARKVIEW ST. GRAND VIEW ST. LAKE ST. ALVARADO WESTLAKE BONNIE BRAE BURLINGTON

L.G. REEL L10
036-XXX/021-XXX
8631' F

M.H. 4900 TO M.H. 4782

WESTLAKE

COMMONWEALTH AVE.

VIRGIL AVE.

WILSHIRE

WESTMORELAND AVE.

SUNSET

HOOVER

LAFAYETTE PARK PL.

RAMPART BLVD.

CORONADO ST.

CARONDELET ST.

PARKVIEW ST.

7TH ST.

8TH ST.

MAGNOLIA AVE.

FRANCIS AVE.

PL.

M.H. 4611 9'×8'×14'

55' W.W.

66' W.W.

306' W.W.

337' W.W.

586' W.W.

121' W.W.

98' W.W.

302' W.W.

M.H. 5476 8'×6½'×12'

M.H. 7995 11'×8'×11½'

M.H. 6947 9'×4'×8'

M.H. 6947 10'×8½'×10'

M.H. 5110 14½'×5½'×13½'

M.H. 6480 9'×4'×8'

M.H. 4616 8½'×4'×6½'

303' W.W.

M.H. 4622 8'×4'×6'

480' W.W.

523' W.W.F.

583' W.W.F.

M.H. 4616 S. WALL LOOK. S.

M.H. 4622 W. WALL LOOK. W. E. WALL LOOK. E.

M.H. 22186 14½'×6'×12'

M.H. 4467 9'×4'×8'

M.H. 4755 9'×4'×7½'

M.H. 22186 W. WALL LOOK. W. E. WALL LOOK. E.

M.H. 4467 W. WALL LOOK. W. E. WALL LOOK. E.

M.H. 4755 W. WALL LOOK. W. E. WALL LOOK. E.

M.H. 5480 W. WALL LOOK. W. E. WALL LOOK. E.

M.H. 5476 W. WALL LOOK. W. E. WALL LOOK. E.

M.H. 6947 W. WALL LOOK. W. E. WALL LOOK. E.

M.H. 5110 W. WALL LOOK. W. E. WALL LOOK. E.

M.H. 7995 W. WALL LOOK. W. E. WALL LOOK. E.

M.H. 5472 W. WALL LOOK. W. E. WALL LOOK. E.

M.H. 4611 DEAD 4' EAST W. WALL LOOK. W. E. WALL LOOK. E.

LEEWARD

SEE DWG. 14

3/29/2024

Verenice Hernandez
Project Award & Control Division
1149 South Broadway, Suite 140
Los Angeles, CA 90015

Requester Project:	Utility Request
Project Name	West 7th Street & Grand View Street
DOCK/PRISM Project Name:	West 7th Street
Conflict:	YES

Thank you for your recent Utility Request to Charter Communications for: West 7th Street & Grand View Street

Please review the attached maps for any possible conflicts with Charter facilities.
There ***ARE*** existing Charter aerial/or underground facilities within the project limits.

We have provided maps showing where our services are located but cannot make any comment on how to deal with possible conflicts during construction. This type of information should come from the Construction Manager, Supervisor or Construction Coordinator for the area in question.

If you should require any field meet or any further coordination of the project with Charter please contact the Construction Manager listed below.

Construction Manager Contact:
Jameison, Leigha
Construction Manager - Zone 6
6357 Arizona Circle
Los Angeles, CA 90045
310-216-5574
Leigha.Jameison1@Charter.com

If you have any questions about the maps provided, please contact DL-socal-charter-engineering@charter.com. This communication is for a project being handled by Charter Communications or Spectrum, a Charter Communications brand name, or Legacy Time Warner Cable. Email replies may come from CCI Systems.

Sincerely,

Dave Dolney

Dave Dolney
Sr. Manager, PACWEST Construction
Charter Communications
7337 Central Ave.
Riverside, CA 92504


Wilshire Blvd
Target Area
7th St
W 8th St
S Hoover St
James M Wood Blvd
S Lake St
S Alvarado St
Wilshire Blvd

West 7th Street
Map
Los Angeles, CA 90015

Red-existing Charter aerial facilities within project limits.

Green-existing Charter underground facilities within project limits.



THE CITY OF LOS ANGELES OR ITS OFFICERS OR AGENTS SHALL NOT BE RESPONSIBLE FOR THE ACCURACY OR COMPLETENESS OF ELECTRONIC COPIES OF THIS PLAN SHEET.

PREFABRICATED PEDESTRIAN BRIDGE, SEE LANDSCAPE AND STRUCTURAL SHEETS FOR DETAILS

RISER AND ATRIUM GRATE INLET TO TERRACED GARDENS

APPROXIMATE LOCATION, BORING B-1

PROPOSED TERRACED GARDENS, SEE SHEET CB103 FOR GRADING

MACARTHUR PARK LAKE

DIVERSION LINE DISCHARGE CONNECTION AT LAKE

24" RCP STORM DRAIN DIVERSION LINE: DISCHARGE TO LAKE (GRAVITY)

APPROXIMATE LOCATION, BORING B-6

6" DIP RECIRCULATION LINE TO TERRACED GARDENS (PRESSURE)

24" FLOW METER (MV1)

6" METER VAULT W/ ACTUATED VALVE (VMV3)

STANDARD TYPE I MANHOLE 'EZ' PER LA BOE STANDARD PLAN S-381-0 (MH1)

24" ACTUATED VALVE (VV1)

DISTRIBUTION MANHOLE, MODIFIED TYPE I MANHOLE 'EZ' PER LA BOE STANDARD PLAN S-381-0

STANDARD TYPE I MANHOLE 'EZ' PER LA BOE STANDARD PLAN S-381-0 (MH2)

NEW CONCRETE WALKWAY, SEE SHEET CB104 FOR GRADING

STORMFILTER SECONDARY STORMWATER TREATMENT UNITS (STU1)

PRESSURE-TO-GRAVITY TRANSITION MANHOLE (TS1)

APPROXIMATE LOCATION, BORING B-2

MODIFIED TYPE I MANHOLE 'EZ' PER CITY OF LA STANDARD PLAN S-381-0 (MH5)

18" DIP STORM DRAIN DIVERSION LINE (PRESSURE)

IMPROVEMENTS TO EXISTING PUMP HOUSE, SEE MECHANICAL AND ELECTRICAL SHEETS

12" METER VAULT w/ ACTUATED VALVE (VMV2)

MACARTHUR PARK

NEW 16" ACTUATED VALVE IN EXISTING VALVE VAULT (VV2)

APPROXIMATE LOCATION, BORING B-5

24" ACTUATED VALVE (VV3)

18" DIP STORM DRAIN DIVERSION LINE (PRESSURE)

NEW 18'-0" WIDE CONCRETE DRIVEWAY PER LA BOE STANDARD PLAN S-440-4, CASE 1

RECIRCULATION LINE CONNECTION AT EXISTING 6" DIP IRRIGATION MAIN

7TH STREET

24" RCP STORM DRAIN RETURN LINE (GRAVITY)

FLOW METER (MV2)

STANDARD TYPE I MANHOLE 'EZ' PER LA BOE STANDARD PLAN S-381-0 (MH3),(MH4)

APPROXIMATE LIMITS OF WORK, TYP.

S PARK VIEW STREET

S GRAND VIEW STREET

12" RCP SANITARY SEWER RETURN LINE (GRAVITY)

STANDARD TYPE I MANHOLE 'EZ' PER LA BOE STANDARD PLAN S-381-0 (MH8)

SADDLE CONNECTION TO EXISTING 48" SANITARY SEWER PER LA BOE STANDARD PLAN B-3334

VALVE AND METER VAULT STRUCTURE (VMV1)

WET WELL PUMP STATION (WWPS1)

STANDARD TYPE I MANHOLE 'EZ' PER LA BOE STANDARD PLAN S-381-0 (MH6),(MH7)

CDS PRETREATMENT UNIT (PT1)

S LAKE STREET

EX 54" RCP STORM DRAIN

DIVERSION STRUCTURE (DS1)

EX 45" RCP STORM DRAIN

OHE LINE

CONNECT TO EXISTING 54" STORM DRAIN PER LA BOE STANDARD PLAN B-3334

(8') ± (27') ± (12') ± (13') ± (35') ± (25') ± (60') ± (15.5') ± (60') ± (44.5') ± (100') ± (40') ± (25.5') ± (14.5') ± (40.5') ± (20') ± (20') ±

CIVIL SITE PLAN

SCALE: 1" = 30'

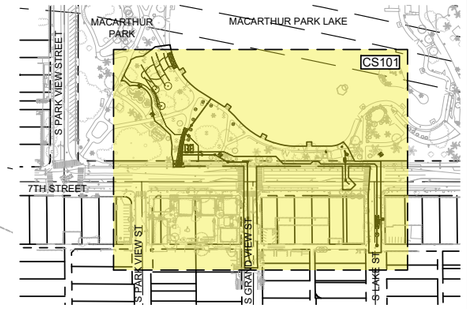

KEY MAP

NO SCALE

30' 0 30' 60'

SCALE: 1" = 30'

ENGINEERING
CITY OF LOS ANGELES

LASANITATION
CITY OF LOS ANGELES

PROFESSIONAL ENGINEER * TIMOTHY J. CAROLLO * C 64417 * REGISTERED * STATE OF CALIFORNIA

THIS PLAN WAS ELECTRONICALLY SIGNED AND STAMPED

BUREAU OF SANITATION

CITY OF LOS ANGELES DEPARTMENT OF PUBLIC WORKS

VERTICAL CONTROL:
HORIZONTAL CONTROL:

SHEET TITLE: CIVIL SITE PLAN

PROJECT: MACARTHUR LAKE STORMWATER CAPTURE PROJECT

ADDRESS: MACARTHUR PARK 2230 6TH ST LOS ANGELES CA 90057

NO	REVISIONS	DATE	BY

CIP NO. XXXXX

INDEX NO. D-XXXXX

craft water engineering, inc.

carollo

DESIGN GROUP:
ENGINEER:
ARCHITECT:
DESIGNED BY:
DRAWN BY:
CHECKED BY:
APPROVED BY:

WORK ORDER
S343MSWC

SHEET NAME
CS102
SHEET XX OF XX SHEETS

REVISION DATES (DESIGN STAGE ONLY)

100% DESIGN SUBMITTAL - NOT FOR CONSTRUCTION 06/14/2024

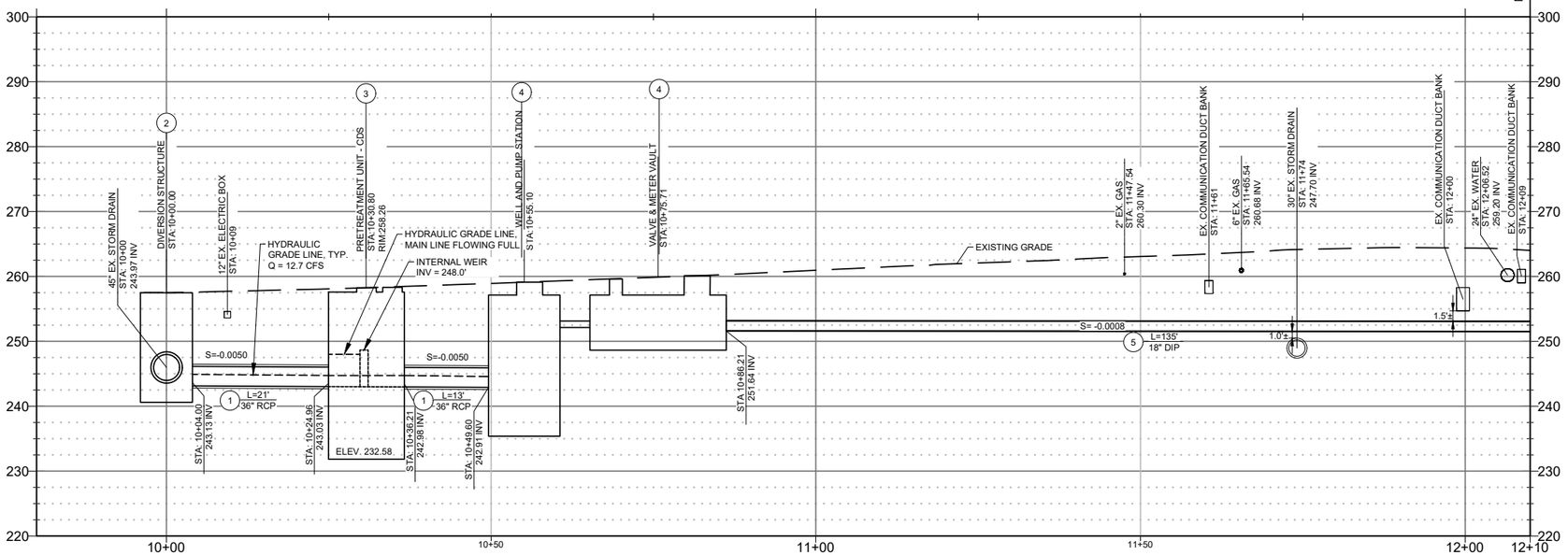

PROFILE VIEW: STORM DRAIN DIVERSION LINE (STA 10+00 TO STA 12+10)

HORIZONTAL SCALE: 1" = 10'
VERTICAL SCALE 1" = 10'

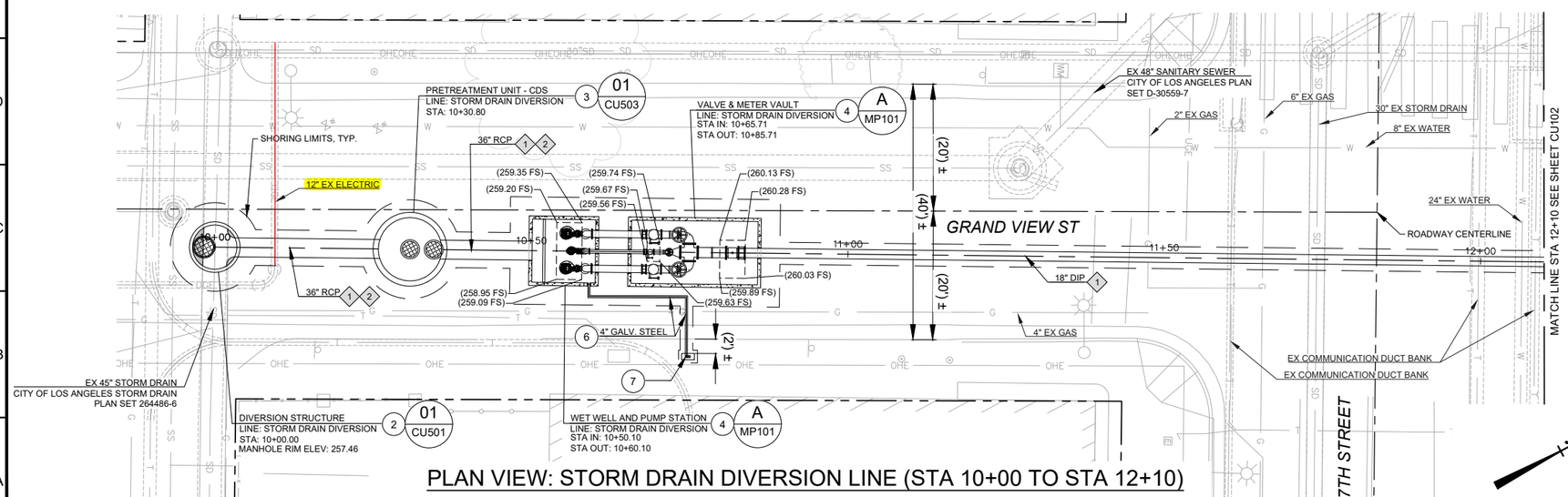

PLAN VIEW: STORM DRAIN DIVERSION LINE (STA 10+00 TO STA 12+10)

SCALE: 1" = 10'

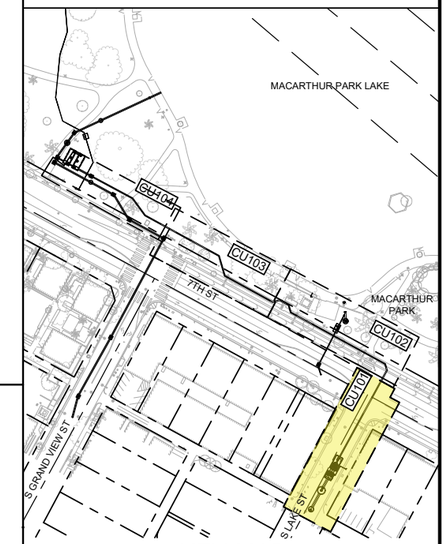

KEY MAP

NO SCALE

LEGEND

- (1) CONSTRUCTION NOTE
- (1) KEY NOTE
- TREE PROTECTION ZONE, SEE SHEET LS100

CONSTRUCTION NOTES

1. NEW 36" RCP STORM DRAIN. SEE KEY NOTES 1 AND 2.
2. CONSTRUCT DIVERSION STRUCTURE (DS1). SEE DETAIL 1 ON SHEET CU501.
3. CONSTRUCT CDS PRE-TREATMENT UNIT (PT1). SEE DETAIL 1 ON SHEET CU501.
4. CONSTRUCT WET WELL AND PUMP STATION (WWPS1) WITH VALVE & METER VAULT (VMV1). SEE SECTION A ON SHEET MP101.
5. NEW 18" DIP STORM DRAIN. SEE KEY NOTE 1.
6. NEW 4" SCHEDULE 80 GALVANIZED STEEL VENT PIPE.
7. CONSTRUCT VENT PIPE OUTLET PER DETAIL 3/CU504.

KEY NOTES

1. REFER TO CITY OF LOS ANGELES STANDARD PLANS S-251 (CASE II) FOR TRENCHING DETAIL AND S-253 FOR PIPE CROSSING SUPPORT DETAIL WHEN APPLICABLE. SEE SPECIFICATION SECTION 02310 FOR BEDDING MATERIALS.
2. REFER TO CITY OF LOS ANGELES STANDARD PLAN S-241-0 FOR REINFORCED CONCRETE PIPE DETAIL.
3. ALL EXISTING UTILITIES TO BE PROTECTED IN PLACE UNLESS OTHERWISE NOTED.
4. INVERTS OF EX UTILITIES SHOWN IN PROFILE ARE APPROXIMATE BASED ON STANDARD BURIAL DEPTHS AND AS-BUILT DRAWINGS AND SHOULD BE VERIFIED IN THE FIELD.

ENGINEERING
CITY OF LOS ANGELES
LASANITATION

THIS PLAN WAS ELECTRONICALLY SIGNED AND STAMPED

REGISTERED PROFESSIONAL ENGINEER * CHRISTOPHER J. STEVENS * C 94417 * STATE OF CALIFORNIA

BUREAU OF SANITATION
DEPARTMENT OF PUBLIC WORKS
CITY OF LOS ANGELES

VERTICAL CONTROL:
HORIZONTAL CONTROL:

SHEET TITLE: PLAN & PROFILE - STORM DRAIN DIVERSION LINE STA 10+00 TO STA 12+15
PROJECT: MACARTHUR LAKE STORMWATER CAPTURE PROJECT
ADDRESS: MACARTHUR PARK 2230 6TH ST LOS ANGELES CA 90057

NO.	REVISIONS	DATE	BY

CIP NO. XXXX
INDEX NO. D-XXXXX

craft water engineering, inc.
carollo

DESIGN GROUP	DATE
ENGINEER:	
ARCHITECT:	
DESIGNED BY:	
DRAWN BY:	
CHECKED BY:	
APPROVED BY:	

WORK ORDER
S343MSWC

SHEET NAME
CU101
SHEET XX OF XX SHEETS

REVISION DATES (DESIGN STAGE ONLY)

THE CITY OF LOS ANGELES OR ITS OFFICERS OR AGENTS SHALL NOT BE RESPONSIBLE FOR THE ACCURACY OR COMPLETENESS OF ELECTRONIC COPIES OF THIS PLAN SHEET.

100% DESIGN SUBMITTAL - NOT FOR CONSTRUCTION 06/14/2024

S33WMLRP - MacArthur Lake Stormwater Capture Project

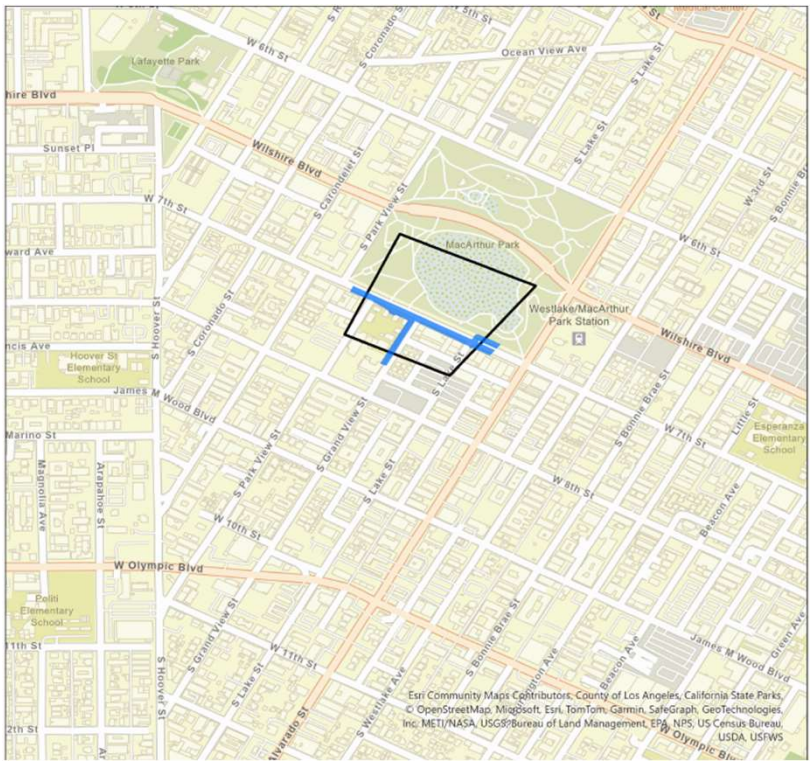
Lafayette Park
W 6th St
Ocean View Ave
S Lake St
Wilshire Blvd
Sunset Pl
S Coronado St
S Park View St
W 7th St
MacArthur Park
W 6th St
W 3rd St
Westlake/MacArthur Park Station
Wilshire Blvd
S Hoover St
Hoover St Elementary School
James M Wood Blvd
S Grand View St
S Bonnie Brae St
W 7th St
Little St
Esperanza Elementary School
Marino St
Magnolia Ave
Arapahoe St
W 8th St
Beacon Ave
W 10th St
W Olympic Blvd
Ezell Elementary School
W 11th St
James M Wood Blvd
Ocean Ave
S Westlake Ave
Esri Community Maps Contributors, County of Los Angeles, California State Parks, © OpenStreetMap, Microsoft, Esri, TomTom, Garmin, SafeGraph, GeoTechnologies, Inc, METI/NASA, USGS, Bureau of Land Management, EPA, NPS, US Census Bureau, USDA, USFWS

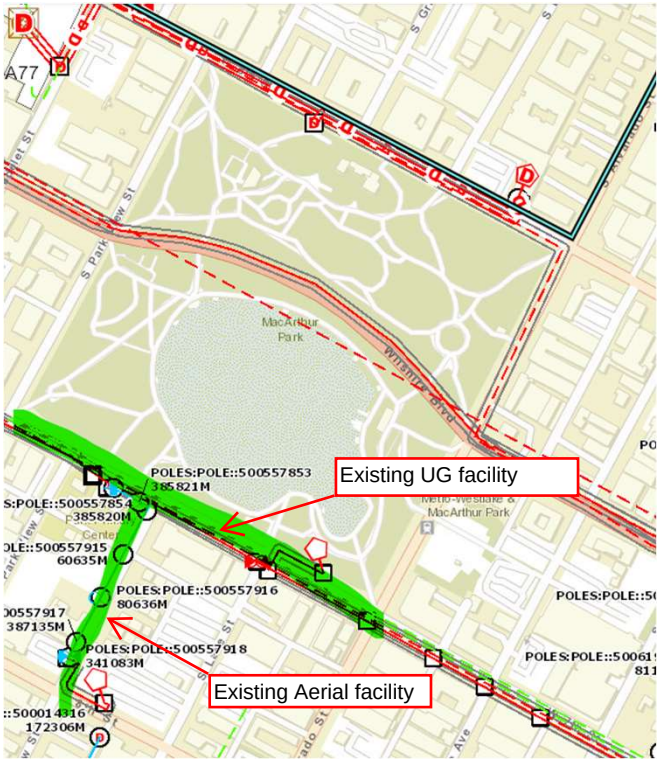
A77
MacArthur Park
POLES:POLE::500557853
385821M
Existing UG facility
POLES:POLE::500557916
80636M
POLES:POLE::500557918
341083M
Existing Aerial facility

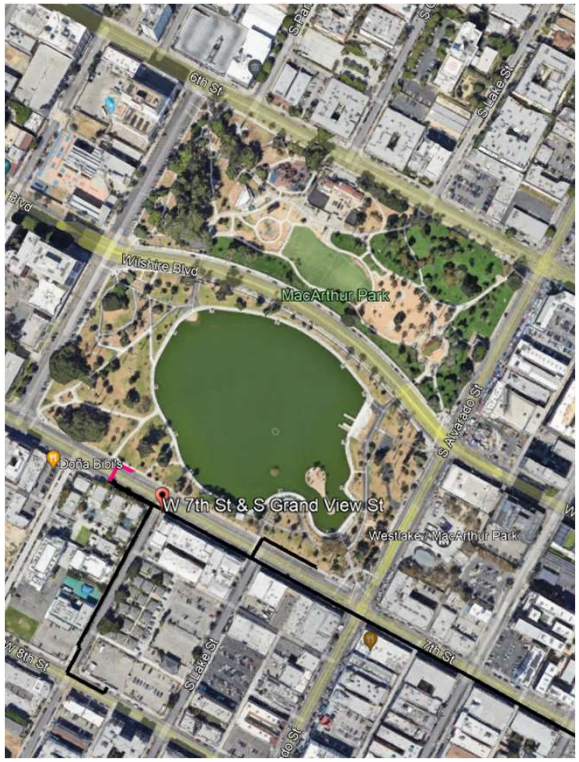
6th St
Wilshire Blvd
MacArthur Park
S Alvarado St
Doña Bibis
W 7th St & S Grand View St
Westlake / MacArthur Park
7th St
W 8th St
S Lake St

Verenice Hernandez <verenice.hernandez@lacity.org>

Design Pending - Conflict - Forward to Engineering - Verizon Business ID: 2024-2452 - S33WMLRP - MacArthur Lake Stormwater Capture Project

'Investigations .' via ENG PAC Utility Coordination <eng-utilitycoord@lacity.org> Wed, Apr 3, 2024 at 9:10 AM
Reply-To: "Investigations ." <investigations@one.verizon.com>
To: ENG PAC Utility Coordination <eng-utilitycoord@lacity.org>

Verizon Business ID: 2024-2452

Dear Sir or Madam:

S33WMLRP - MacArthur Lake Stormwater Capture Project

Verizon Business has been notified by your office regarding the above referenced project.

The comparison of your location map with the Verizon Business in-house records determined that Verizon Business facilities do exist in the area of the proposed construction. At this time, a conflict is anticipated. Your information has been forwarded to our Engineering group and they will be in contact to coordinate the next steps.

It will be necessary for you to **contact the One Call System for your area at least 48 hours prior to construction** to ensure our facilities are properly located.

Sincerely,

Verizon Business

Investigation Inquiry 2024-2452.pdf
1464K

Verenice Hernandez <verenice.hernandez@lacity.org>

Facility Check Request: S33WMLRP- MacArthur Lake Stormwater Capture Project

'Kasse, Elhadji Dame' via ENG PAC Utility Coordination <eng-utilitycoord@lacity.org> Tue, Apr 9, 2024 at 10:09 AM
Reply-To: "Kasse, Elhadji Dame" <elhadji.kasse@verizon.com>
To: eng-utilitycoord@lacity.org
Cc: "Garcia, Tracey" <tracey.garcia1@verizon.com>

Hello,
The Verizon/MCI/XO has been completed for this project: **S33WMLRP- MacArthur Lake Stormwater Capture Project**
We have UG and Aerial facilities within the location of this project.

Please see attached document for your reference:

verizon

Dame Kasse
Engr III Spec-Ntwk Eng&Ops
GATE – Global Access & Transport Engineering
Verizon Business Group
M 949-501-0914
San Diego, CA

2024-2452 (r).pdf
529K

Verizon Business Facilities Investigations Request: 2024-2452

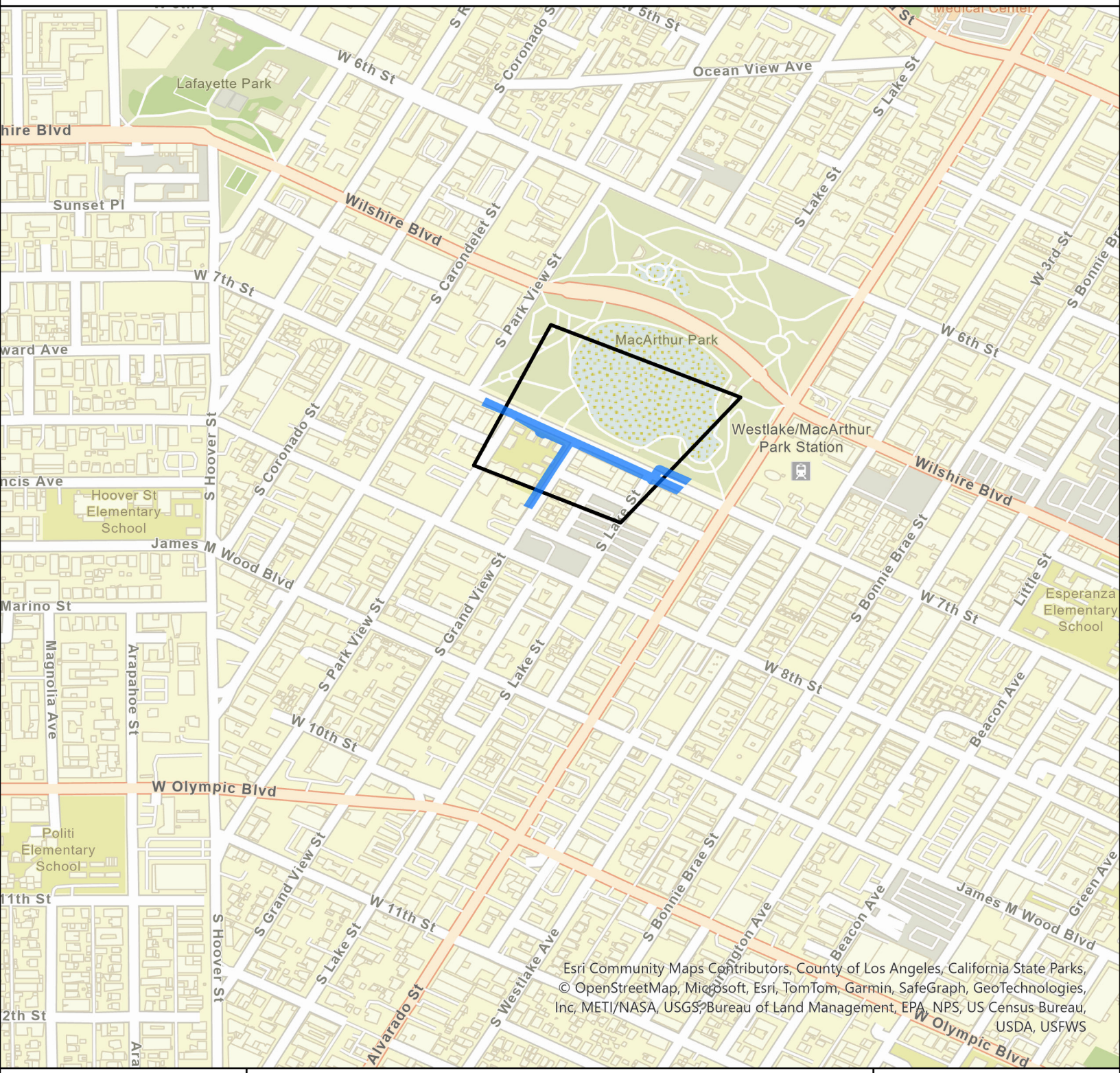

2024-2452

Request Area

Underground Facilities

The facilities detailed above are for informational purposes only. Not to scale. **You must call 811 at least 48 hours prior to any construction.**

This map was generated on 4/3/2024

N

verizon

Verenice Hernandez <verenice.hernandez@lacity.org>

First Notice: S33WMLRP - MacArthur Lake Stormwater Capture Project

Frank Gonzalez <frank.gonzalez@lacity.org> Thu, Mar 28, 2024 at 2:27 PM
To: ENG PAC Utility Coordination <eng-utilitycoord@lacity.org>

Hi Verenice,

Please use this email as confirmation ITA does not have any conflicts within your improvement area, nor anywhere near it.

Thanks
[Quoted text hidden]

Transmission Technical
Services Department

9400 Oakdale Ave
Chatsworth, CA 91311
SC9314

April 12, 2024

Verenice Hernandez
City of Los Angeles
verenice.hernandez@lacity.org

Subject: **S33WMLRP - MacArthur Lake Stormwater Capture Project**

DCF: **0694-24NC**

The Transmission Department of SoCalGas does not operate any facilities within your proposed improvement. However, the Distribution Department of SoCalGas may maintain and operate facilities within your project scope.

To assure no conflict with the Distribution's pipeline system, please e-mail them at:

SCG-ComptonUtilityRequest@semprautilities.com

Best Regards,
Nerses Papazyan
SoCalGas Transmission Technical Services
SoCalGasTransmissionUtilityRequest@semprautilities.com

Verenice Hernandez <verenice.hernandez@lacity.org>

No Facilities: First Notice: S33WMLRP - MacArthur Lake Stormwater Capture Project

Boyden, Holden <Holden.Boyden@lumen.com> Tue, May 14, 2024 at 7:53 AM
To: "verenice.hernandez@lacity.org" <verenice.hernandez@lacity.org>

Date: 04/11/2024

Attn: Verenice Hernandez

Thank you for your project notification. LUMEN has reviewed your utility notice regarding P-549997 CA | S33WMLRP - MacArthur Lake Stormwater Capture Project- Area of W 7th St & S Grand View St, Los Angeles, CA ("Project"). In response to your inquiry please find the enclosed drawings indicating the approximate location of the project limits.

- **LUMEN has facilities within your proposed construction area. The plans submitted are under review by our LUMEN Field Engineer(s). Currently, the estimated completion date of review is** [FCD].

- **LUMEN has facilities within your proposed construction area. Please find the enclosed drawings indicating the location of the LUMEN facilities. Once you have completed your review, please respond back if LUMEN facilities appear to be in conflict. A LUMEN engineer will be assigned when engineering plans are ready for review.**

X LUMEN does not have facilities within your proposed construction area.

- **LUMEN has facilities within your proposed construction zone, but it has been determined that no relocation will be necessary. However, due to the proximity of your project to our facilities, a LUMEN representative will be required on-site when construction begins.**

- **The information provided in your initial request is insufficient to determine if the location of your proposed construction will conflict with LUMEN facilities. Please provide additional detailed location maps, drawings (PDF preferred), and description for further conflict review.**

Please contact your State One Call prior to construction.

Any changes or additions to the project plans or parameters should be submitted to relocations@lumen.com. Note: the location(s) of facilities shown on drawings you receive from us, are only approximate. LUMEN hereby disclaims any responsibility for the accuracy of this information. Please contact relocations@lumen.com regarding the above-

mentioned project if you should have any questions. Please reference the file number P-549997 CA with any future communications.

Important Notice - For the States listed below, please add relocations@brightspeed.com to your distribution list for inquiries and updates regarding local facilities.

(AL, AR, GA, IL, IN, KS, LA, MI, MO, MS, NC, NJ, OH, OK, PA, SC, TN, TX, VA, WI)

Thank you for your cooperation!

Holden Boyden *(He/Him)*

Business Analyst

Relocations Department

Holden.Boyden@lumen.com

We have combined!! To better serve everyone, there is now a single email inbox for LUMEN. One team is monitoring both national and local network relocations & road moves. Please add **relocations@lumen.com** to your contacts list for inquiries, updates, and use it for all future notifications.**

Lumen Facility Map



5/14/2024, 9:42:30 AM

1:2,784

FiberCable Leased
- Backbone
- Lateral
- <all other values>

FiberCable Owned
- Backbone
- Lateral

Routes Leased
- METRO LATERAL,UNDERGROUND
- METRO,UNDERGROUND

Routes Owned
- METRO,UNDERGROUND
- METRO/LONGHAUL,UNDERGROUND

0 0.03 0.06 0.11 mi
0 0.04 0.09 0.18 km

Esri Community Maps Contributors, County of Los Angeles, California State Parks, © OpenStreetMap, Microsoft, Esri, TomTom, Garmin, SafeGraph, GeoTechnologies, Inc, METI/NASA, USGS, Bureau of Land Management, EPA, NPS, US Census Bureau, USDA, USFWS

© map data Lumen © 1992 – 2023 TomTom

Note: Facilities shown are only approximate and Lumen hereby disclaims any responsibility to third parties for the accuracy of this information. Persons working in the area must contact statewide Call-Before-You-Dig systems.

Verenice Hernandez <verenice.hernandez@lacity.org>

RE: 0030736 - First Notice: S33WMLRP - MacArthur Lake Stormwater Capture Project

'Victorio, Louis' via ENG PAC Utility Coordination <eng-utilitycoord@lacity.org> Wed, May 15, 2024 at 10:30 AM
Reply-To: "Victorio, Louis" <Louis.Victorio@crowncastle.com>
To: ENG PAC Utility Coordination <eng-utilitycoord@lacity.org>

Hello,

Please see the completed Utility Request attached in response to your inquiry.

If there are any questions or concerns, please do not hesitate to follow up with us.

[Quoted text hidden]
[Quoted text hidden]

0030736 - First Notice S33WMLRP - MacArthur Lake Stormwater Capture Project.docx
2347K

CROWN CASTLE UTILITY REQUEST



CROWN CASTLE OWNED CONDUIT VIEW

Request Number: 0030736

FIBER DIG SERVICES
1500 Corporate Dr., Canonsburg, PA 15317
1-800-654-3110
Fiber.dig@CrownCastle.com

CROWN CASTLE KEY

- UNDERGROUND CONDUIT
- (LINETYPE) AERIAL FIBER
- (LINETYPE) UNDERGROUND FIBER

CROWN CASTLE

CROWN CASTLE UTILITY REQUEST



FIBER VIEW

Request Number: 0030736

FIBER DIG SERVICES
1500 Corporate Dr., Canonsburg, PA 15317
1-800-654-3110
Fiber.dig@CrownCastle.com

CROWN CASTLE KEY

- UNDERGROUND CONDUIT
- (LINETYPE) AERIAL FIBER
- (LINETYPE) UNDERGROUND FIBER

CROWN CASTLE

STREET LIGHTING SUBSTRUCTURE CONFLICT SUMMARY

Project Title
MacArthur Lake Stormwater Capture Project

Work Order
S33WMLRP

STREET NAME	Location	CIRCUIT TYPE	PLAN NUMBER	BSL's Requirements/Comments			
7th Street and Lake Street	1	M	D-28727	Proposed storm drainage design intersects BSL conduit at the intersection of 7th St and Lake St as shown on plan D-28727 and sheet CS101.	Not shown in plan view or cross section		
7th Street and Lake Street	2	M	D-28727	Proposed storm drainage design is within 10 feet of BSL conduit as shown on plan D-28727 and sheet CS101.	Outside of shoring limits		
7th Street and Grand View Street	3	M	P-37352	Proposed storm drainage design intersects BSL conduit at the intersection of 7th St and Grand View St as shown on plan P-37352 and sheet CS101.	Street Light Conduit shown on enlarged plan view CU107. Not shown on cross section, missing conduit depth		

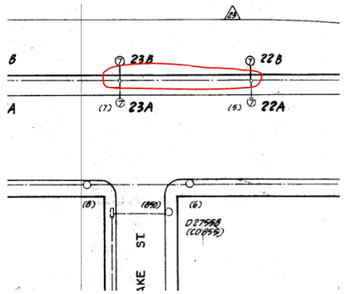

PLAN REF.: D-28727

LOC. # 1: Between 7th St and Lake St
Along 7th St

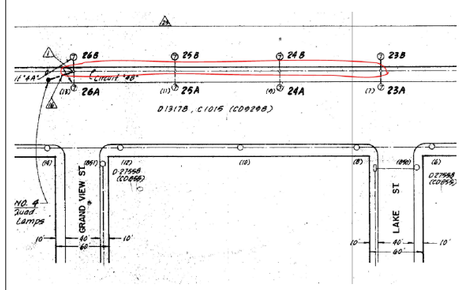

PLAN REF.: D-28727

LOC. # 2: Between 7th St and Lake St
Along 7th St

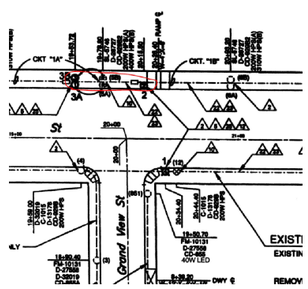

PLAN REF.: P-37352

LOC. # 3: Between 7th St and Grand View St
Along 7th St

PLAN REF.:

LOC. #:

PLAN REF.:

LOC. #:

PLAN REF.:

LOC. #:

LEGENDS

- AREA OF POSSIBLE CONFLICT
- EXISTING PULLBOX
- EXISTING 1" MULT. CONDUIT
- EXISTING 1 1/2"MULT.CONDUIT
- EXISTING 2" MULT. CONDUIT
- EXISTING 1" MULT. CONDUIT
- EXISTING 1 1/2"MULT.CONDUIT
- EXISTING 2" MULT. CONDUIT
- EXISTING STREET LIGHT

CITY OF LOS ANGELES
BUREAU OF STREET LIGHTING

BOE & DOT LIGHTING DESIGN
BOE SECTION

PROJECT TITLE :
MacArthur Lake Stormwater Capture Project

W.O. Number : S33WMLRP

PLAN REFERENCE:
D-28727 & P-37352

PREPARED BY: CHADWICK DAVID DATE: 05/20/2024

CHECKED BY: ROMEL BRAVO DATE: 05/20/2024

INDEX: S33WMLRP-1 SHEET NO.: 1 OF 1

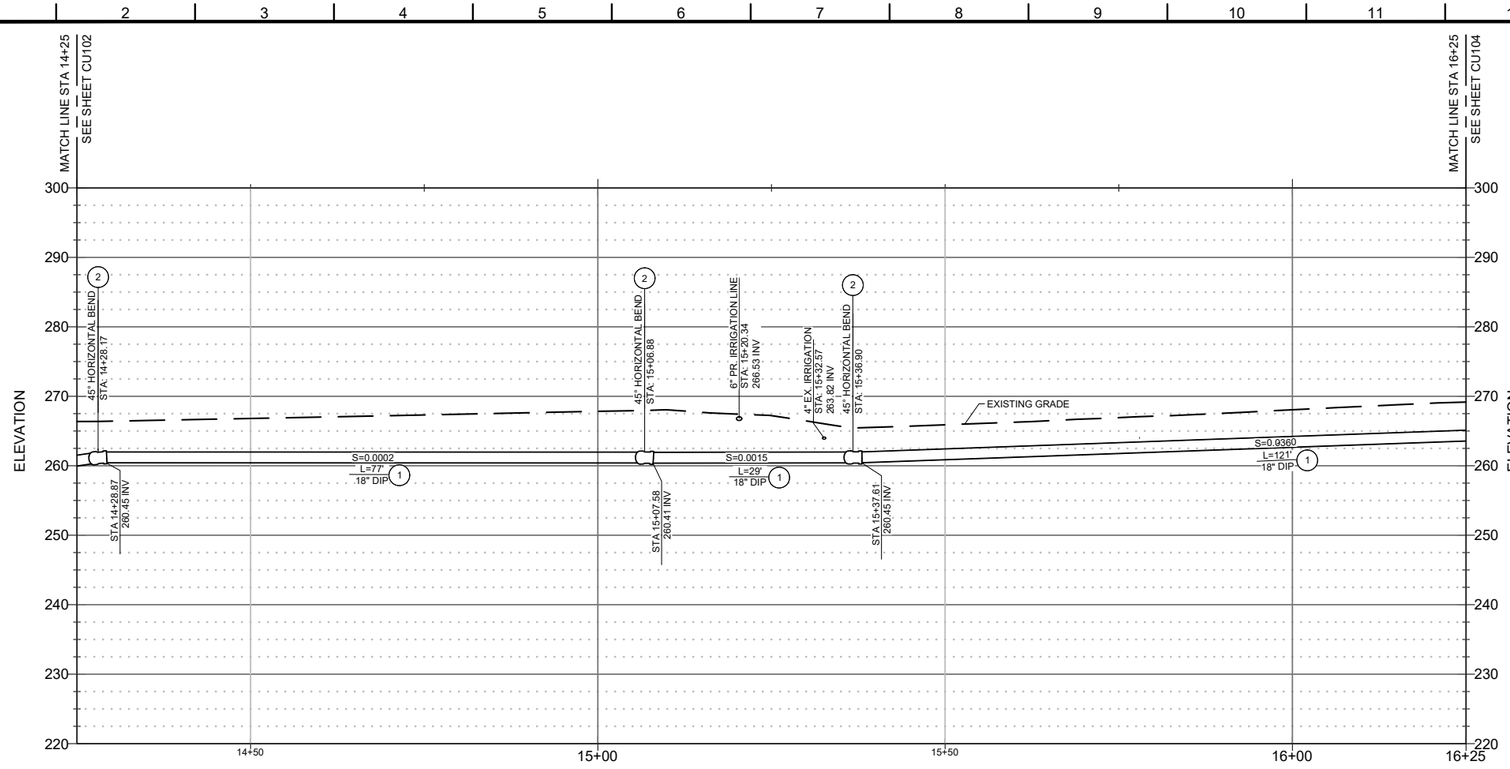

PROFILE VIEW: STORM DRAIN DIVERSION LINE (STA 14+25 TO STA 16+25)

HORIZONTAL SCALE: 1" = 10'
VERTICAL SCALE 1" = 10'

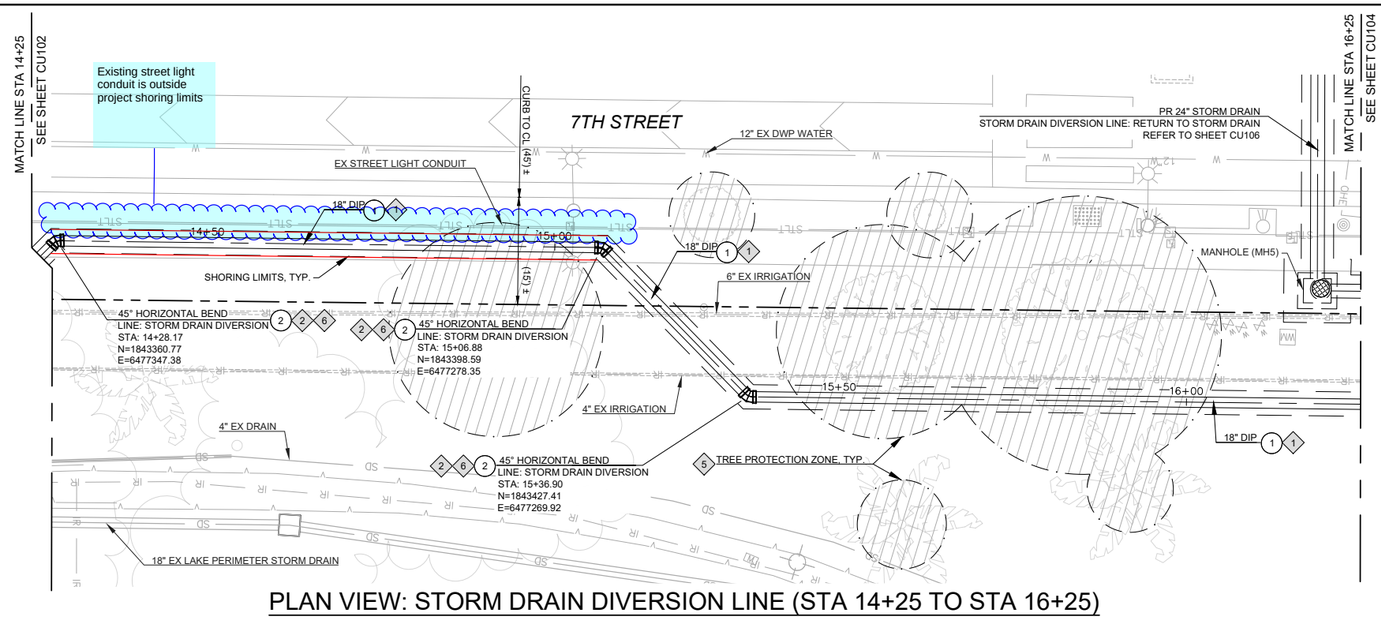

PLAN VIEW: STORM DRAIN DIVERSION LINE (STA 14+25 TO STA 16+25)

SCALE: 1" = 10'

10' 0 10' 20'
1" = 10'

LEGEND

- (1) CONSTRUCTION NOTE
- (1) KEY NOTE
- TREE PROTECTION ZONE, SEE SHEET LS100

CONSTRUCTION NOTES

1. NEW 18" DIP STORM DRAIN. SEE KEY NOTE 1.
2. 45 DEGREE HORIZONTAL DI BEND. SEE KEY NOTES 2 AND 6.

KEY NOTES

1. REFER TO CITY OF LOS ANGELES STANDARD PLANS S-251 (CASE II) FOR TRENCHING DETAIL AND S-253 FOR PIPE CROSSING SUPPORT DETAIL WHEN APPLICABLE. SEE SPECIFICATION SECTION 02310 FOR BEDDING MATERIALS.
2. FITTINGS WILL FOLLOW ANSI/ AWWA C110/A21.10 STANDARD.
3. ALL EXISTING UTILITIES TO BE PROTECTED IN PLACE UNLESS OTHERWISE NOTED.
4. INVERTS OF EX UTILITIES SHOWN IN PROFILE ARE APPROXIMATE BASED ON STANDARD BURIAL DEPTHS AND AS-BUILT DRAWINGS AND SHOULD BE VERIFIED IN THE FIELD.
5. TREE PROTECTION ZONE, TYP. ALL EXCAVATION WITHIN TREE PROTECTION ZONES ARE SUBJECT TO SPECIAL REQUIREMENTS AND RESTRICTIONS. SEE PROTECTION REQUIREMENTS SHEET LS100.
6. THE CONTRACTOR SHALL PROVIDE THRUST BLOCKS FOR ALL DI BENDS PER LOS ANGELES COUNTY WATERWORKS DISTRICTS STANDARD PLAN W-21.

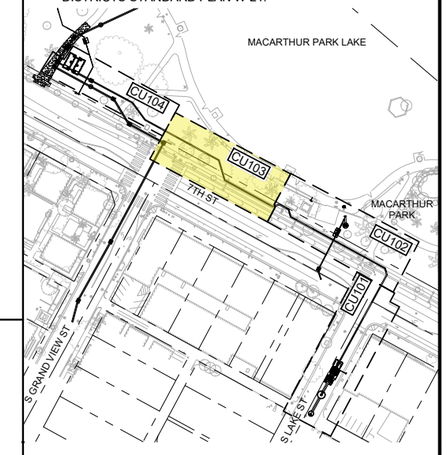

KEY MAP

NO SCALE

ENGINEERING
CITY OF LOS ANGELES
LA SANITATION

REGISTERED PROFESSIONAL ENGINEER * CHRISTOPHER M. STEVENS * C 84417 * STATE OF CALIFORNIA

THIS PLAN WAS ELECTRONICALLY SIGNED AND STAMPED

BUREAU OF SANITATION
CITY OF LOS ANGELES DEPARTMENT OF PUBLIC WORKS

VERTICAL CONTROL:
HORIZONTAL CONTROL:

SHEET TITLE: PLAN & PROFILE - STORM DRAIN DIVERSION LINE STA 14+25 TO STA 16+25
PROJECT: MACARTHUR LAKE STORMWATER CAPTURE PROJECT
ADDRESS: MACARTHUR PARK 2230 6TH ST LOS ANGELES CA 90057

NO	REVISIONS	DATE	BY

CIP NO. XXXX
INDEX NO. D-XXXXX

craft water engineering, inc.
carollo

DESIGN GROUP:	DATE
ENGINEER:	
ARCHITECT:	
DESIGNED BY:	
DRAWN BY:	
CHECKED BY:	
APPROVED BY:	

WORK ORDER
S343MSWC

SHEET NAME
CU103
SHEET XX OF XX SHEETS

THE CITY OF LOS ANGELES OR ITS OFFICERS OR AGENTS SHALL NOT BE RESPONSIBLE FOR THE ACCURACY OR COMPLETENESS OF ELECTRONIC COPIES OF THIS PLAN SHEET.

REVISION DATES (DESIGN STAGE ONLY)

100% DESIGN SUBMITTAL - NOT FOR CONSTRUCTION 06/14/2024

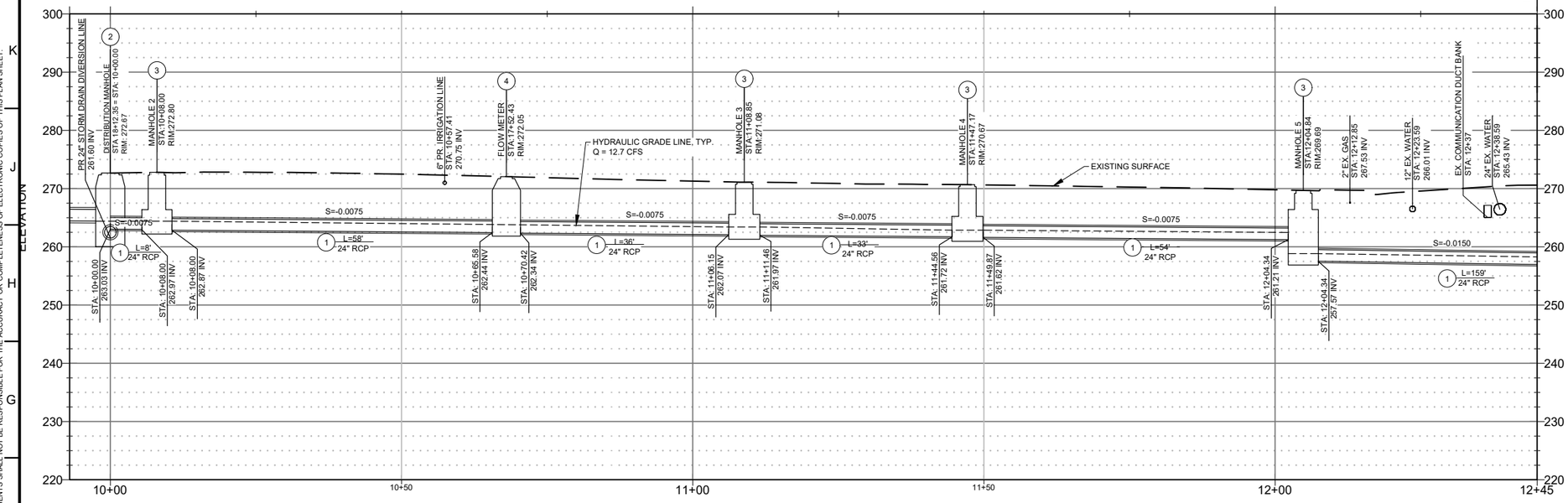

PROFILE VIEW: STORM DRAIN DIVERSION: RETURN TO STORM DRAIN OUTFLOW LINE (STA 10+00 TO STA 12+45)

HORIZONTAL SCALE: 1" = 10'
VERTICAL SCALE 1" = 10'

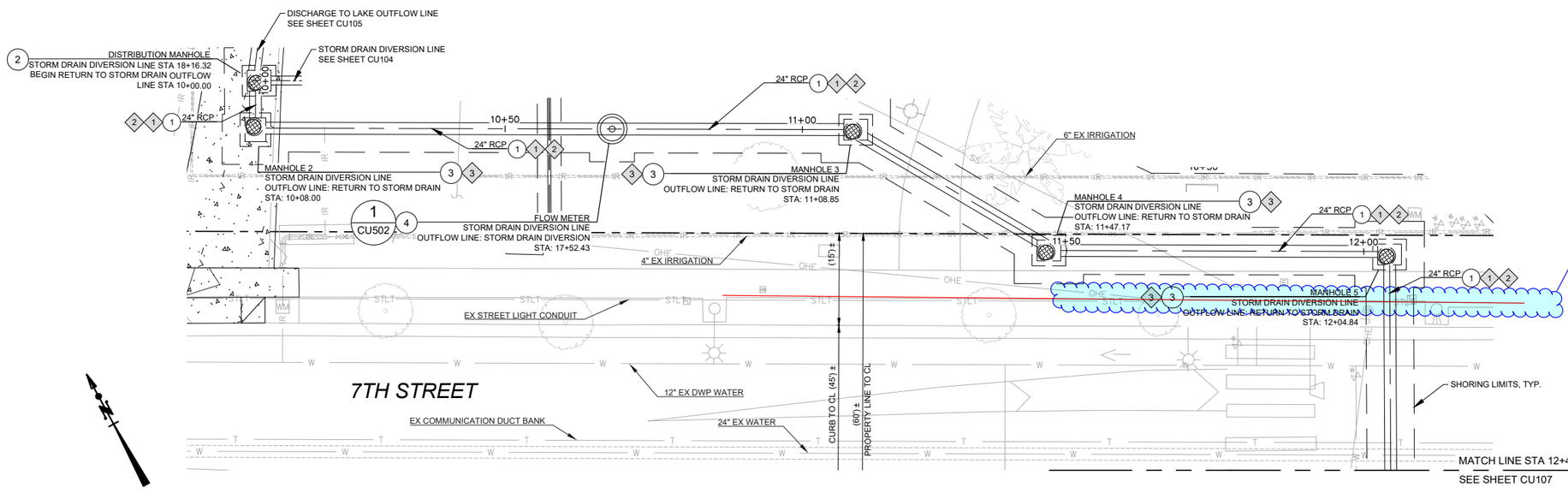

PLAN VIEW: STORM DRAIN DIVERSION: RETURN TO STORM DRAIN OUTFLOW LINE (STA 10+00 TO STA 12+45)

SCALE: 1" = 10'

10' 0 10' 20'
1" = 10'

LEGEND

(1) — CONSTRUCTION NOTE ◇1 — KEY NOTE

CONSTRUCTION NOTES

1. NEW 24" RCP STORM DRAIN. SEE KEY NOTES 1 AND 2.
2. CONSTRUCT DISTRIBUTION MANHOLE. SEE LA BOE STANDARD PLAN S-300-0. SEE KEY NOTE 3.
3. CONSTRUCT STANDARD TYPE I 'EZ' MANHOLE (MH2, MH3, MH4, MH5) PER LA BOE STANDARD PLAN S-381-0. SEE KEY NOTE 3.
4. CONSTRUCT FLOW METER VAULT (MV3). SEE DETAIL 1 ON SHEET CU502.

KEY NOTES

1. REFER TO LA BOE STANDARD PLANS S-251 (CASE II) FOR TRENCHING DETAIL AND S-253 FOR PIPE CROSSING SUPPORT DETAIL WHEN APPLICABLE.
2. REFER TO LA BOE STANDARD PLAN S-241-0 FOR REINFORCED CONCRETE PIPE DETAIL.
3. PRECAST MANHOLE SHAFT PER LA BOE STANDARD PLAN S-387-1 TYPE 1 FOR PRECAST MANHOLE SHAFT. 30" MANHOLE FRAME AND LID PER LA BOE STANDARD PLAN S-283-3.
4. ALL EXISTING UTILITIES TO BE PROTECTED IN PLACE UNLESS OTHERWISE NOTED.
5. INVERTS OF EX UTILITIES SHOWN IN PROFILE ARE APPROXIMATE BASED ON STANDARD BURIAL DEPTHS AND AS-BUILT DRAWINGS AND SHOULD BE VERIFIED IN THE FIELD.

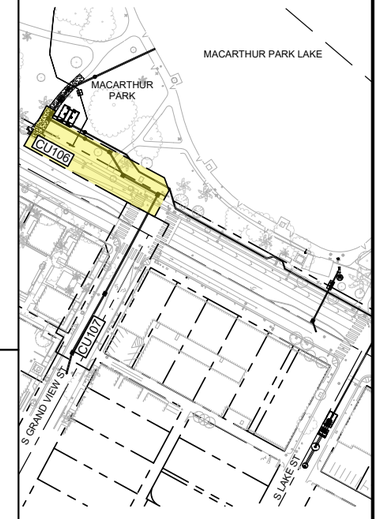

KEY MAP

NO SCALE

ENGINEERING
CITY OF LOS ANGELES
LASANITATION
CITY OF LOS ANGELES

COURTNEY PIERCE LOW
PROFESSIONAL ENGINEER
C 84417
STATE OF CALIFORNIA

THIS PLAN WAS ELECTRONICALLY SIGNED AND STAMPED

BUREAU OF SANITATION
DEPARTMENT OF PUBLIC WORKS
CITY OF LOS ANGELES

VERTICAL CONTROL:
HORIZONTAL CONTROL:

SHEET TITLE: PLAN & PROFILE - STORM DRAIN DIVERSION LINE: RETURN TO STORM DRAIN STA 10+00 TO STA 12+45
PROJECT: MACARTHUR LAKE STORMWATER CAPTURE PROJECT
ADDRESS: MACARTHUR LAKE PARK 2230 6TH ST LOS ANGELES CA 90057

NO	REVISIONS	DATE	BY

CIP NO. XXXXX

INDEX NO. D-XXXXX

craftwater engineering, inc.

carollo

DESIGN GROUP	DATE
ENGINEER:	
ARCHITECT:	
DESIGNED BY:	
DRAWN BY:	
CHECKED BY:	
APPROVED BY:	

WORK ORDER
XXX####

SHEET NAME
CU106
SHEET XX OF XX SHEETS

THE CITY OF LOS ANGELES OR ITS OFFICERS OR AGENTS SHALL NOT BE RESPONSIBLE FOR THE ACCURACY OR COMPLETENESS OF ELECTRONIC COPIES OF THIS PLAN SHEET.

REVISION DATES (DESIGN STAGE ONLY)

90% DESIGN SUBMITTAL - NOT FOR CONSTRUCTION 03/15/2024

BUREAU OF ENGINEERING

MACARTHUR LAKE
STORMWATER CAPTURE PROJECT
PROJECT NO. S33WMLRP, S343MSWC, S043MSWC

ATTACHMENT 4
SITE SURVEY AND AS-BUILT PLANS FOR
LAKE AND 7TH STREET

JANUARY 2026

City of Los Angeles
California

Department of Public Works
Bureau of Engineering

ENGINEERING
CITY OF LOS ANGELES

THIS PAGE INTENTIONALLY LEFT BLANK

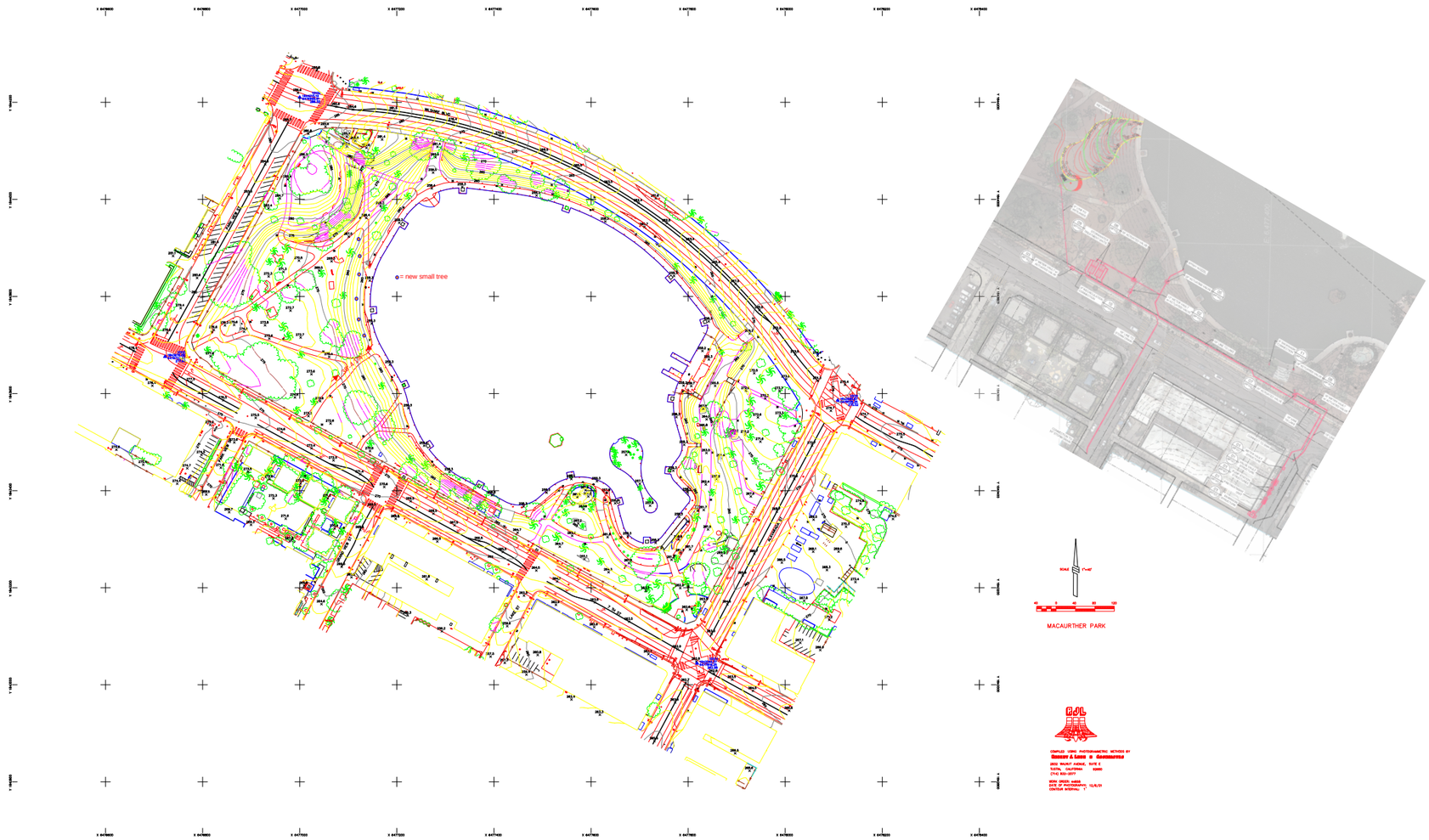
= new small tree
MACAURTHER PARK

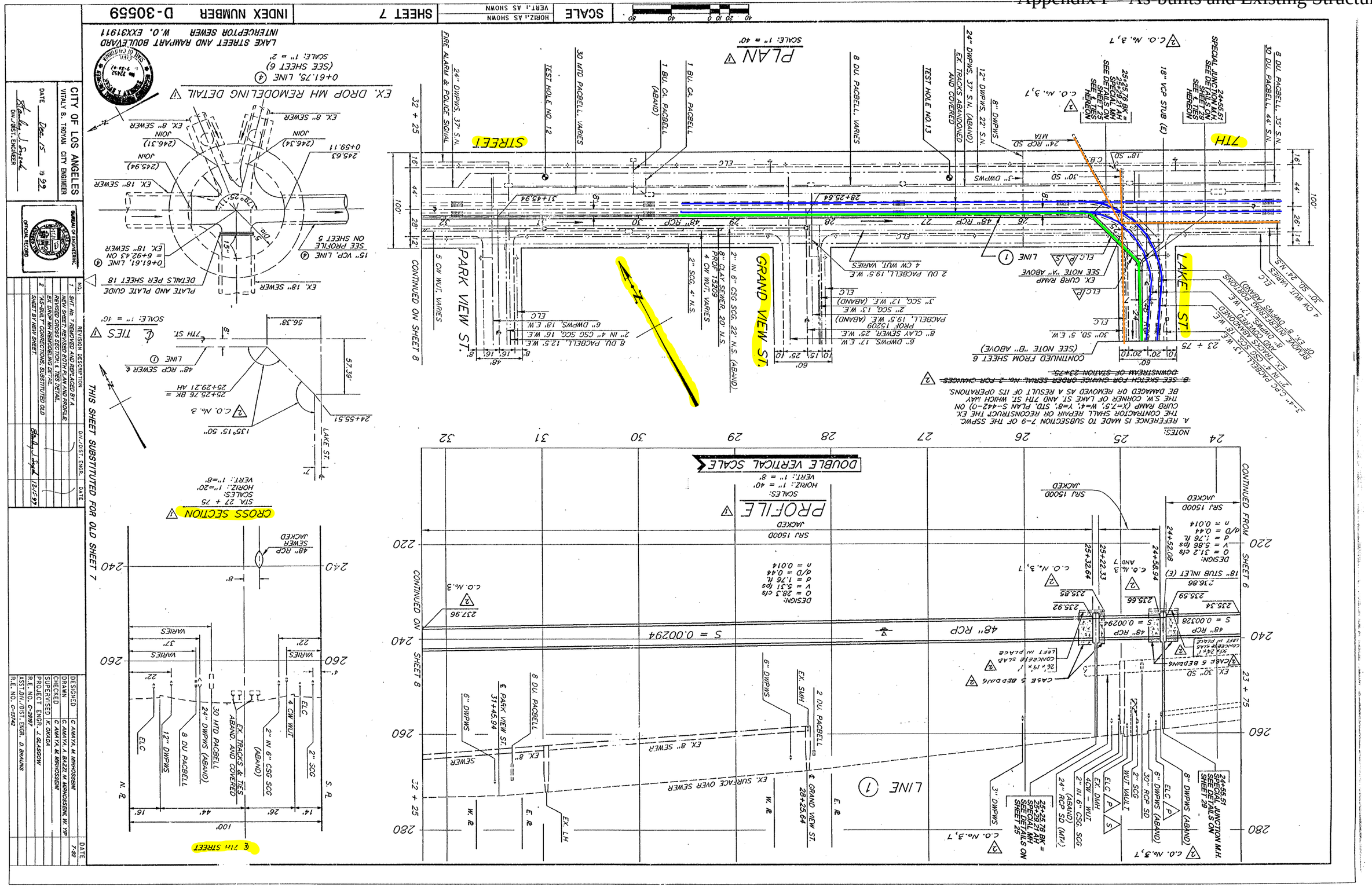
INDEX NUMBER D-30559
SHEET 7
SCALE
HORIZ.: AS SHOWN
VERT.: AS SHOWN
CITY OF LOS ANGELES
VITALY B. TROYAN CITY ENGINEER
DATE Dec 15 1922
DIV./DIST. ENGINEER
BUREAU OF ENGINEERING
OFFICIAL RECORD
REVISION DESCRIPTION
DIV./DIST. ENGR.
DATE
DESIGNED
DRAWN
CHECKED
SUPERVISED
PROJECT ENGR.
R.E. NO.
ASST. DIV./DIST. ENGR.
R.E. NO.
DATE
7-92
THIS SHEET SUBSTITUTED FOR OLD SHEET 7
LAKE STREET AND RAMPART BOULEVARD
INTERCEPTOR SEWER W.O. EXX3191
PLAN
EX. DROP MH REMODELING DETAIL
CROSS SECTION
PROFILE
DOUBLE VERTICAL SCALE
TIES
NOTES:
PARK VIEW ST.
GRAND VIEW ST.
LAKE ST.
7TH
STREET
LINE (1)
CONTINUED ON SHEET 8
CONTINUED FROM SHEET 6
48" RCP
S = 0.00294
S = 0.00328
SRJ 1500D JACKED
24" RCP SD
30" SD
18" SD
18" STUB (E)
18" VCP STUB (E)
8 DU. PACBELL, 35' S.N.
8 DU. PACBELL, 44' S.N.
24" DWPWS, 37' S.N.
12" DWPWS, 22' S.N.
8" DWPWS
3" DWPWS
6" DWPWS
2" SCG
2" IN 6" CSG SCG
4" CW WUT
4 CW WUT, VARIES
5 CW WUT, VARIES
2" SCG, 4' N.S.
8" CLAY SEWER, 20' N.S.
PROF. 1520D
6" CAVY SEWER, 25' W.E.
2" IN 4" CSG SCG, 16' W.E.
6" DWPWS, 18' E.W.
8 DU. PACBELL, 12.5' W.E.
2 DU. PACBELL, 19.5' W.E.
3" SCG, 12' W.E. (ABAND)
2" SCG, 13' W.E.
EX. CURB RAMP
SEE NOTE "A" ABOVE
EX. TRACKS ABANDONED AND COVERED
REMOVE INTERSECTING PORTIONS OF EX. 8" DWPWS (ABAND)
EX. SURFACE OVER SEWER
EX. 8" SEWER
EX. 18" SEWER
EX. LH
FIRE ALARM & POLICE SIGNAL
TEST HOLE NO. 12
TEST HOLE NO. 13
3D MTD PACBELL, VARIES
1 BU. CA. PACBELL (ABAND)
1 BU. CA. PACBELL
8 DU. PACBELL, VARIES
CONTINUED ON SHEET 8
CONTINUED FROM SHEET 6
DESIGN:
Q = 31.2 cfs
V = 5.86 fps
d = 1.76 ft.
d/D = 0.44
n = 0.014
DESIGN:
Q = 28.3 cfs
V = 5.31 fps
d = 1.76 ft.
d/D = 0.44
n = 0.014
CASE 5 BEDDING
EX. 30" SD
EX. 24" RCP
CONCRETE SLAB LEFT IN PLACE
CONCRETE SLAB LEFT IN PLACE
24+55.51 JUNCTION M.H. SEE DET. ON SHEET 29
25+25.78 BK = 25+29.21 AH SPECIAL JUNCTION M.H. SEE DETAILS ON SHEET 29
24+55.57 SPECIAL JUNCTION M.H. SEE DETAILS ON SHEET 29 SEE K TIES HEREON
25+25.78 BK = 25+29.21 AH SPECIAL JUNCTION M.H. SEE DETAILS ON SHEET 29 SEE K TIES HEREON
C.O. No. 3,7
C.O. No. 3
C.O. No. 3,7
C.O. No. 3,7
C.O. No. 3,7
C.O. No. 3
C.O. No. 3,7
C.O. No. 3,7
C.O. No. 3,7
C.O. No. 3
C.O. No. 3,7
C.O. No. 3,7
C.O. No. 3,7

SDMH (258.23) RIM
8" STEEL PIPE (250.03) OUT

SDMH (258.20) RIM
10" (247.21) OUT

IRRIGATION PAINTMARK

RW

SDMH (264.16) RIM
(258.93) OUT

WATER PAINTMARK

SSMH (264.57) RIM
48" (238.16) IN
48" (237.96) OUT

CABLE TV PAINTMARK

STORM DRAIN PAINTMARK

POSSIBLE RAILROAD

7TH STREET

CABLE TV PAINTMARK

POSSIBLE RAILROAD

STORM DRAIN PAINTMARK

SSMH (264.15) RIM

CABLE TV PAINTMARK

ELECTRIC PAINTMARK

SSMH (269.76) RIM

SSMH (262.23) RIM
8" (254.57) IN
8" (254.37) IN
8" (254.23) OUT

ELECTRIC PAINTMARK

WATER PAINTMARK

CURB & GUTTER

STORM DRAIN PAINTMARK

CURB & GUTTER

GRAND VIEW STREET

LAKE STREET

ELECTRIC PAINTMARK

WATER PAINTMARK

CABLE TV PAINTMARK

SSMH (266.42) RIM
8" (251.82) IN
8" (251.72) OUT

SDMH (265.69) RIM
30" (241.69) INV

CABLE TV PAINTMARK

STORM DRAIN PAINTMARK

ELECTRIC PAINTMARK

STORM DRAIN PAINTMARK

SEWER PAINTMARK

CABLE TV PAINTMARK

SDMH (265.69) RIM
54" (241.65) IN
54" (241.55) OUT

CABLE TV PAINTMARK

SEWER PAINTMARK

SDMH (256.39) RIM
54" (243.63) IN
54" (243.50) IN
54" (243.16) OUT

STORM DRAIN PAINTMARK

ELECTRIC PAINTMARK

SSMH (257.71) RIM
8" (248.48) IN
8" (248.38) OUT

SSMH (265.69) RIM

N

SC□□□: □" □ □□□

EXHIBIT MAP

UNDER GROUND UTILITY
PAINT MARKS
COUNTY OF LOS ANGELES
STATE OF CALIFORNIA
JUNE 29, 2023

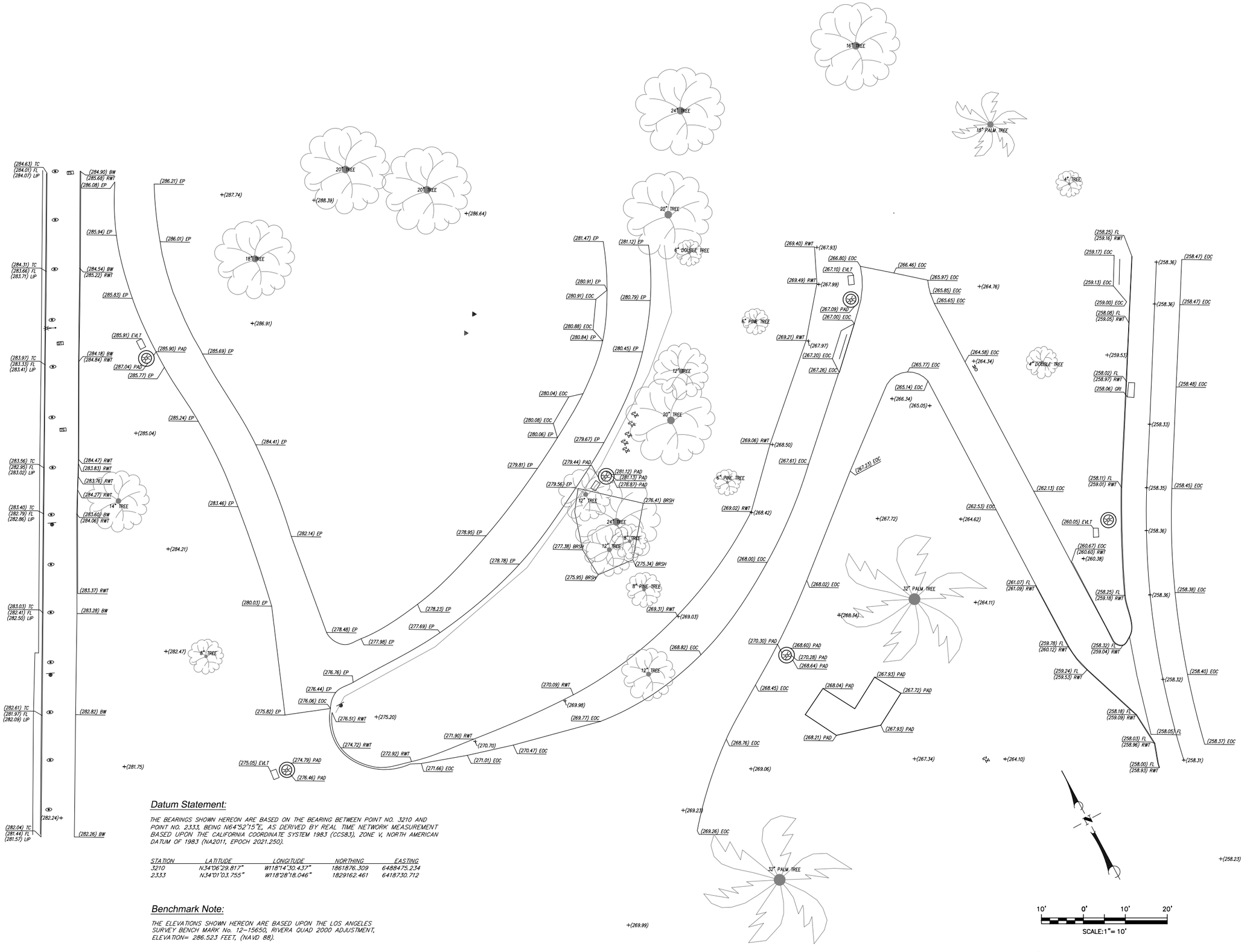

Datum Statement:

THE BEARINGS SHOWN HEREON ARE BASED ON THE BEARING BETWEEN POINT NO. 3210 AND POINT NO. 2333, BEING N64°52'15"E, AS DERIVED BY REAL TIME NETWORK MEASUREMENT BASED UPON THE CALIFORNIA COORDINATE SYSTEM 1983 (CCS83), ZONE V, NORTH AMERICAN DATUM OF 1983 (NA2011, EPOCH 2021.250).

STATION	LATITUDE	LONGITUDE	NORTHING	EASTING
3210	N34°06'29.817"	W118°14'30.437"	1861876.309	6488475.234
2333	N34°01'03.755"	W118°28'18.046"	1829162.461	6418730.712

Benchmark Note:

THE ELEVATIONS SHOWN HEREON ARE BASED UPON THE LOS ANGELES SURVEY BENCH MARK No. 12-15650, RIVERA QUAD 2000 ADJUSTMENT, ELEVATION= 286.523 FEET, (NAVD 88).

GUIDA SURVEYING INC.
220 COMMERCE, SUITE 150
IRVINE, CALIFORNIA 92602
TOLL FREE 1.855.90GUIDA
WWW.GUIDAINC.COM

NO.	DATE	REVISIONS	APPD.
0			
1			
2			
3			
4			
5			
6			
7			
8			
9			

TOPOGRAPHIC SURVEY
MACARTHUR PARK
COUNTY OF LOS ANGELES
STATE OF CALIFORNIA
JUNE 29, 2023

JOB NUMBER: 0121-02351
FIELD: AW
DATE: JUNE 28, 2023
OFFICE: SH
DATE: JUNE 29, 2023
FILE: -

SHEET
1
OF 1 SHEET

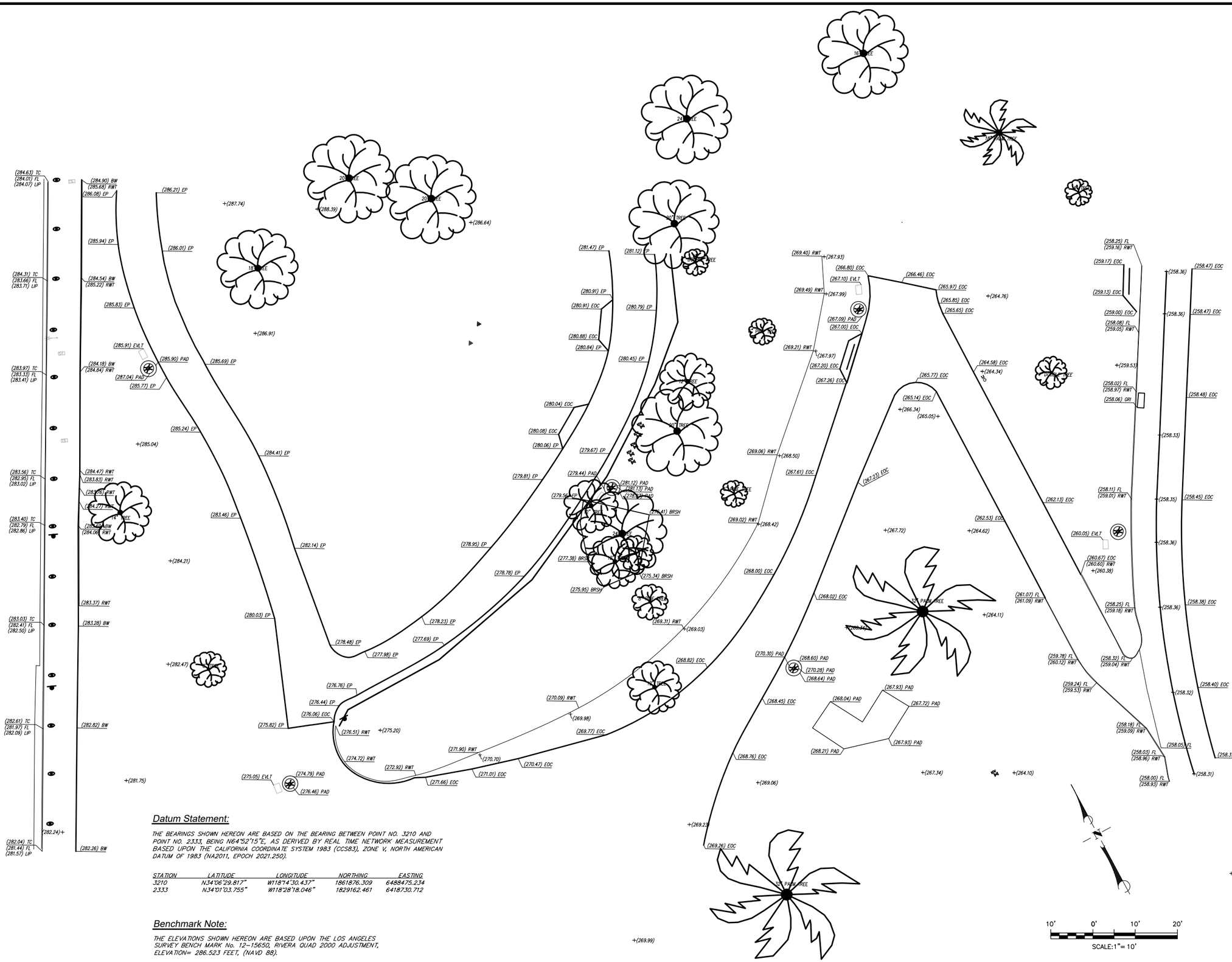

Datum Statement:

THE BEARINGS SHOWN HEREON ARE BASED ON THE BEARING BETWEEN POINT NO. 3210 AND POINT NO. 2333, BEING N64°52'15"E, AS DERIVED BY REAL TIME NETWORK MEASUREMENT BASED UPON THE CALIFORNIA COORDINATE SYSTEM 1983 (CCS83), ZONE V, NORTH AMERICAN DATUM OF 1983 (NA2011, EPOCH 2021.250).

STATION	LATITUDE	LONGITUDE	NORTHING	EASTING
3210	N34°06'29.817"	W118°14'30.437"	1861876.309	6488475.234
2333	N34°01'03.755"	W118°28'18.046"	1829162.461	6418730.712

Benchmark Note:

THE ELEVATIONS SHOWN HEREON ARE BASED UPON THE LOS ANGELES SURVEY BENCH MARK No. 12-15650, RIVERA QUAD 2000 ADJUSTMENT, ELEVATION= 286.523 FEET, (NAVD 88).

GUIDA SURVEYING INC.
220 COMMERCE, SUITE 150
IRVINE, CALIFORNIA 92602
TOLL FREE 1.855.90GUIDA
WWW.GUIDAINC.COM

NO.	DATE	REVISIONS	APPD.
0			
1			
2			
3			
4			
5			
6			
7			
8			
9			

TOPOGRAPHIC SURVEY
MACARTHUR PARK
COUNTY OF LOS ANGELES
STATE OF CALIFORNIA

JUNE 29, 2023

JOB NUMBER: 0121-02351
FIELD: AW
DATE: JUNE 28, 2023
OFFICE: SH
DATE: JUNE 29, 2023
FILE: -

SHEET
1
OF 1 SHEET

C:\Users\Site\Desktop\0121-02351-20250612 MacArthur park.dwg, 8/18/23 01:39 PM, Site

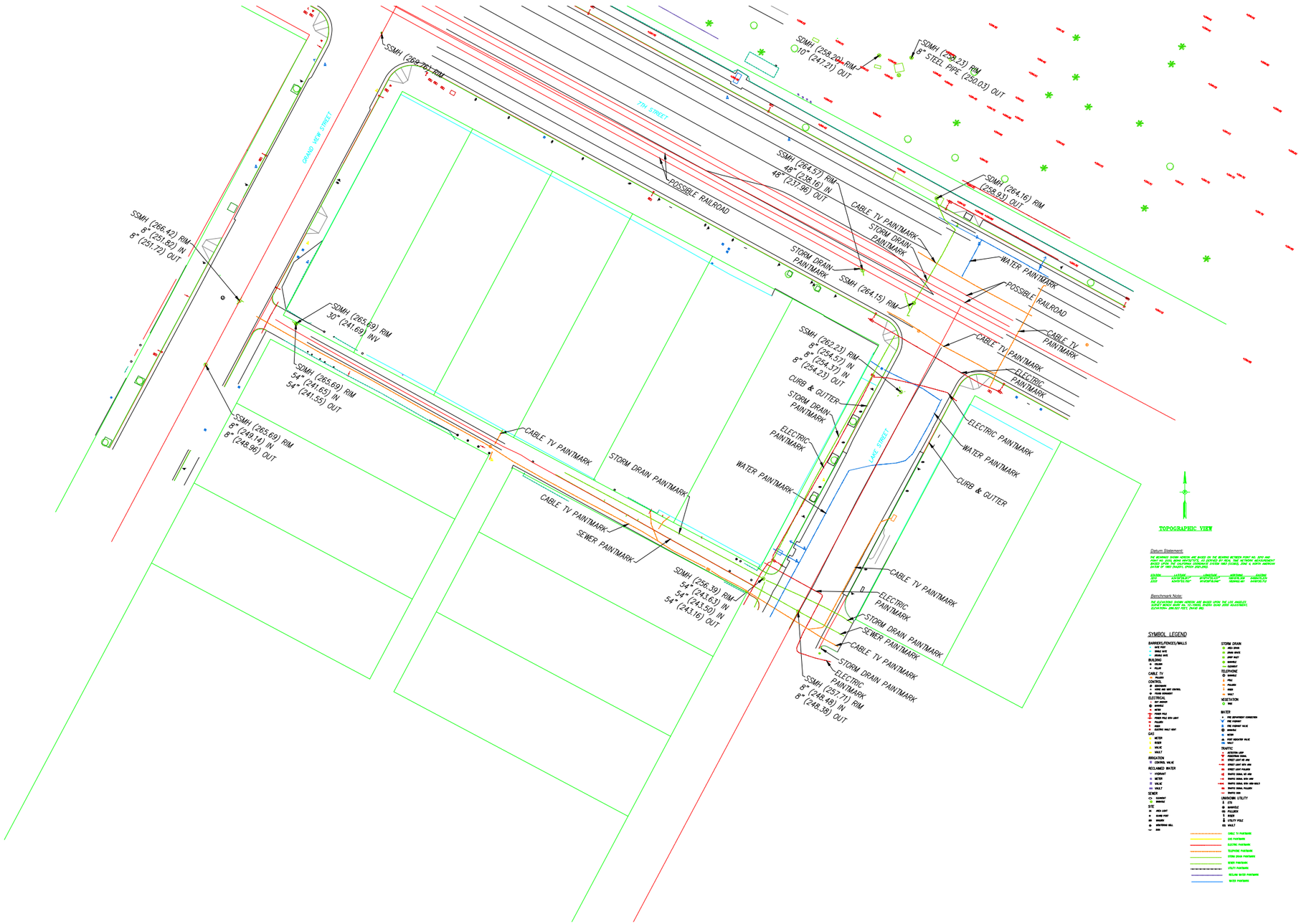

TOPOGRAPHIC VIEW

Datum Statement:

THE BENCHMARK SYSTEM UTILIZED FOR THIS SURVEY IS BASED ON THE NAVD88 DATUM. ELEVATIONS WERE ESTABLISHED BY GPS OBSERVATIONS REFERENCED TO THE FOLLOWING CONTROL POINT(S): CP1 (ELEVATION = 1234.56 FEET, NAVD88), CP2 (ELEVATION = 1230.12 FEET, NAVD88), AND/OR THE FOLLOWING PERMANENT BENCHMARK(S): BM1 (ELEVATION = 1228.90 FEET, NAVD88).

NORTH	LATITUDE	LONGITUDE	NORTHING	EASTING
CP1	40°45'12.34"	111°53'45.67"	1234567.89	2345678.12
CP2	40°45'08.91"	111°53'52.10"	1234321.45	2345123.78

Benchmark Note:

THE ELEVATIONS SHOWN ON THIS SURVEY ARE BASED UPON THE GPS OBSERVATIONS REFERENCED TO CP1 (ELEVATION = 1234.56 FEET, NAVD88). ALL ELEVATIONS SHOWN ARE IN FEET, NAVD88.

SYMBOL LEGEND

BARRIERS/FENCES/WALLS
WIRE POST
WOOD POST
WOOD RAIL
BUILDING
BUILDING
PILLAR
CABLE TV
PEDESTAL
CONTROL
CONTROL BOX
CONTROL BOX WITH CONTROL
POWER EQUIPMENT
ELECTRICAL
GUY ANCHOR
METER
POWER POLE
POWER POLE WITH LIGHT
PULLBOX
VAULT
WIRELESS RADIO EQUIPMENT
GAS
METER
RISER
VALVE
VAULT
IRRIGATION
CONTROL VALVE
RECLAIMED WATER
HYDRANT
METER
VALVE
VAULT
SEWER
MANHOLE
SERVICE
SITE
BOX UNIT
BOX WITH
MARKER
MONITORING WELL
STORM DRAIN
AREA DRAIN
BRASS CAP
CAP INLET
MANHOLE
PIPE/CULVERT
TELEPHONE
BOX
PED
PULLBOX
RISER
VAULT
VEGETATION
TREE
WATER
FIRE DEPARTMENT CONNECTION
FIRE HYDRANT
FIRE HYDRANT VALVE
METER
RISER
VAULT
TRAFFIC
ACCESSIBLE RAMP
CROSSWALK MARKING
STREET LIGHT W/ ARM
STREET LIGHT W/O ARM
STREET LIGHT PULLBOX
TRAFFIC SIGNAL W/ ARM
TRAFFIC SIGNAL W/O ARM
TRAFFIC SIGNAL W/O ARM W/LS
TRAFFIC SIGNAL PULLBOX
TRAFFIC SIGN
UNKNOWN UTILITY
(?)
MANHOLE
PULLBOX
RISER
UTILITY POLE
VAULT

CABLE TV PAINTMARK
GAS PAINTMARK
ELECTRIC PAINTMARK
TELEPHONE PAINTMARK
STORM DRAIN PAINTMARK
SEWER PAINTMARK
UTILITY PAINTMARK
BUILDING WATER PAINTMARK
WATER PAINTMARK

GUIDA SURVEYING INC.

TOPOGRAPHIC DATA COLLECTION

PAGE 1 OF 5

DATE: 2021-12-08

CREW: J. GROEN / C. DARYMPLE

GUIDA JOB NUMBER: 0121-02351

PROJECT NAME: MACARTHUR PARK

CLIENT NAME: CARRILLO ENGINEERING

PROJECT LOCATION: LOS ANGELES / TREE TORO

INSTRUMENT S/N: 37411426

WEATHER: SUNNY

PRESSURE:

TEMP: 70°F

INSTR@	HI	BS	HI	FS/POINT	HT	CODE	DESCRIPTION/NOTES
10003	5.06	10002	5.34	10001	6.50	CP	BEG TORO @ 12839
							END TORO @ 12923
10002	5.04	10003	4.97	10001	4.97	CP	BEG TORO @ 12924
							END TORO @ 12925

GUIDA SURVEYING INC. MANHOLE DETAILS

DATE: 2021-12-08

CREW: J.GREEN/C.DALRYMPLE

GUIDA JOB NUMBER: 0121-02357

PROJECT NAME: MACARTHUR PARK

CLIENT NAME: CAROLLO ENG

PROJECT LOCATION:

NORTH

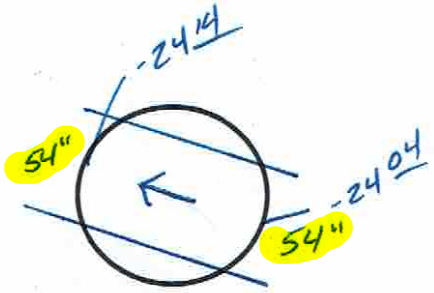

Point# 12765 Description: SDMH

NORTH

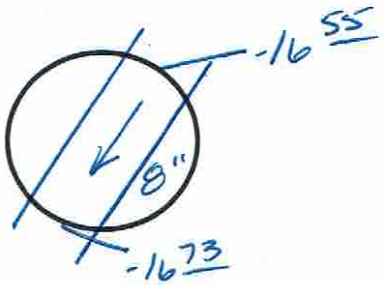

Point# 12033 Description: SSMH

NORTH

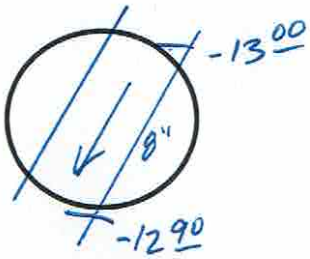

Point# 12032 Description: SSMH

NORTH



Point# 12031 Description:

NORTH

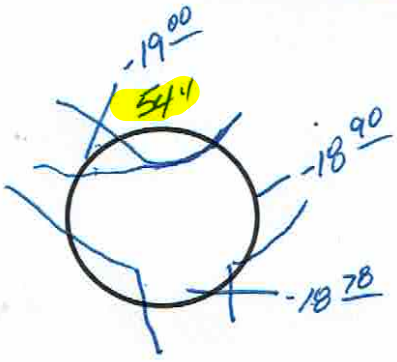

Point# 12034 Description: SDMH

NORTH

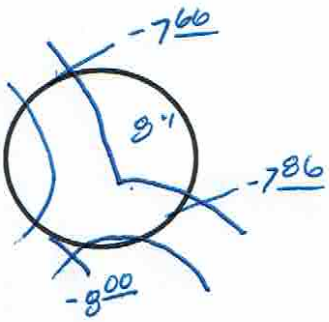

Point# 12029 Description: SSMH

GUIDA SURVEYING INC. MANHOLE DETAILS

PAGE 3 OF 5

DATE: 2021-12-08

CREW: J. GROEN / C. DAIRYMPLE

GUIDA JOB NUMBER: 0121-02351

PROJECT NAME: MACARTHUR PARK

CLIENT NAME:

PROJECT LOCATION: LOS ANGELES

NORTH

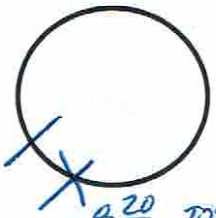

Point# 15000 Description:

NORTH

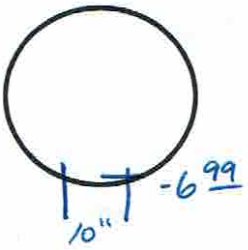

Point# 15001 Description:

NORTH

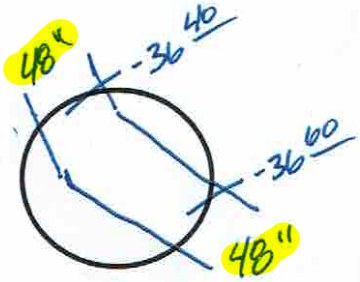

12036 ~~15003~~
Point# ~~15005~~ Description: SSMH

NORTH

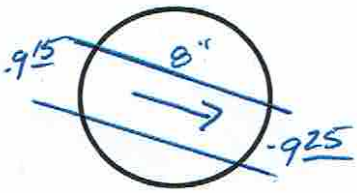

Point# 12037 Description: SSMH

NORTH

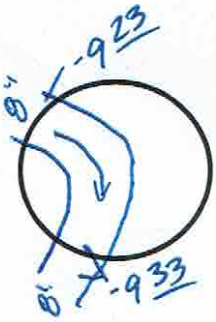

Point# 12030 Description: SSMH

NORTH

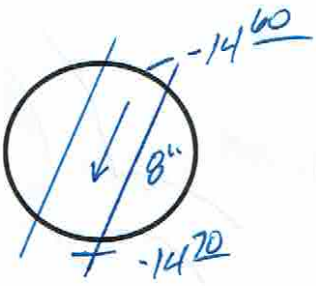

Point# 12537 Description: SSMH

GUIDA SURVEYING INC. MANHOLE DETAILS

PAGE 4 OF 5

DATE: _____

CREW: _____ GUIDA JOB NUMBER: _____

PROJECT NAME: _____ CLIENT NAME: _____

PROJECT LOCATION: _____

NORTH

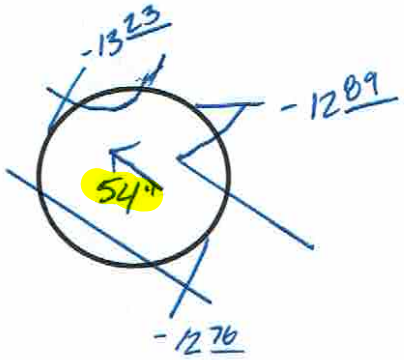

Point# 12029 Description: SDMH

NORTH

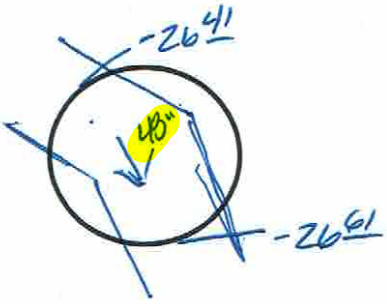

Point# 12248 Description: SSMH

NORTH

Point# _____ Description: _____

NORTH

Point# _____ Description: _____

NORTH

Point# _____ Description: _____

NORTH

Point# _____ Description: _____

GUIDA SURVEYING INC.

CATCH BASIN/ INLET DETAILS

PAGE 5 OF 5

DATE: _____

CREW: _____ GUIDA JOB NUMBER: _____

PROJECT NAME: _____ CLIENT NAME: _____

PROJECT LOCATION: _____

NORTH

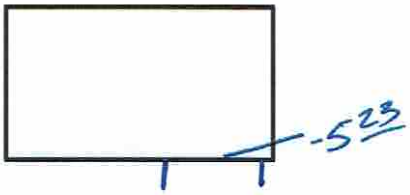

Point# 12110 Description: CATCH BASIN @ 7TH

NORTH

Point# _____ Description: _____

NORTH

Point# _____ Description: _____

NORTH

Point# _____ Description: _____

NORTH

Point# _____ Description: _____

NORTH

Point# _____ Description: _____

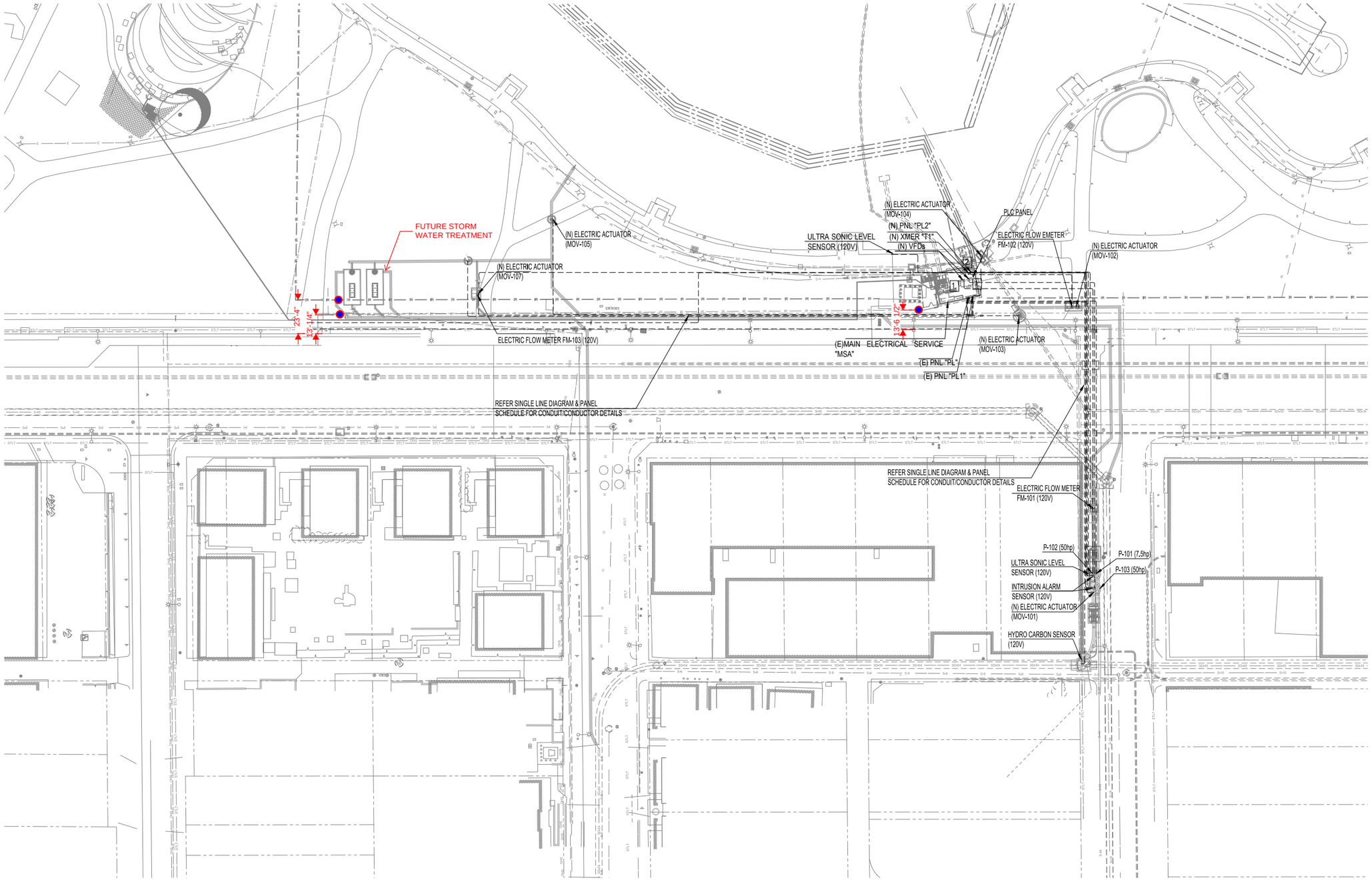

● = Pothole Location

01 SITE PLAN
SCALE: 1/32"=1'-0"

Utility Locating
Radiography
Potholing
Mapping
GPR

C BELOW
SUBSURFACE IMAGING
An RMA Company

Pothole Report

Date:	**October 18, 2023**
Technician:	**Ruben Lopez**
Project Name:	**MacArthur Lake Potholing**
Project Address:	**S Park View Street, Los Angeles, CA 90057**
C Below Project No.	**22-5694**

www.cbelow.com
1-888-90-BELOW
1385 Old Temescal Rd., STE 100
Corona, CA 92881

C BELOW SUBSURFACE IMAGING
An RMA Company

1385 Old Temescal Rd., Suite 100
Corona, CA 92881
1-888-90-BELOW

Date: **October 18, 2023**
Technician: **Ruben Lopez**
Project Name: **MacArthur Lake Potholing**
Project Address: **S Park View Street, Los Angeles, CA 90057**
C Below Project No. **22-5694**

Project Summary

No.	Utility	Size (in)	Material	Top Depth (ft)	Direction	Location	Surface
1	Water	Unknown	Encasement	1.70	E-W	North West Bound on 7th St. in Bike Lane, North East of Address 2200	Asphalt
2	Comm	Unknown	Encasement	3.44	E-W	South East Bound on 7th Street in #2 Lane, North East of Address 2200	Asphalt
3	Water	8	Steel	3.80	E-W	South East Bound on 7th Street in #1 Lane, North East of Address 2200	Asphalt
4	Dry Hole	N/A	N/A	N/A	N/A	South East Bound on 7th Street in #1 Lane, North East of Address 2200	Asphalt
5	Dry Hole	N/A	N/A	N/A	N/A	North West Bound on 7th Street in #1 Lane, North East of Address 2200	Asphalt
6	Comm	Unknown	Encasement	1.80	E-W	North West Bound on 7th Street in #2 Lane, North East of Address 2200	Asphalt
7	Unknown	4	Steel	3.88	N-S	North East Bound on S Lake St. in Parking Stall, West of 2130 W 7th St.	Asphalt
8	Dry Hole	N/A	N/A	N/A	N/A	North East Bound on S Lake St. in Parking Stall, West of 2130 W 7th St.	Asphalt
9	Dry Hole	N/A	N/A	N/A	N/A	North East Bound on S Lake St. in Parking Stall, West of 2130 W 7th St.	Asphalt
10	Unknown	12	Unknown	7.30	N-S	South West Bound on S Lake St., West of 2130 W 7th St.	Asphalt
11	Dry Hole	N/A	N/A	N/A	N/A	South West Bound on S Lake St., West of 2130 W 7th St.	Asphalt
12	Water	8	Steel	2.80	N-S	South West Bound on S Lake St. in Parking Stall, West of 2130 W 7th St.	Asphalt
13	Water	4	PVC	1.30	E-W	South East Side of 653 S Alvarado St., North of Address 2214 7th St.	Soil
14	Dry Hole	N/A	N/A	N/A	N/A	South East Side of 653 S Alvarado St., North of Address 2316 7th St.	Soil
14A	Electric	(2) 4	PVC	3.30	N-S	South East Side of 653 S Alvarado St., North of Address 2316 7th St.	Soil

Comments: Top depth is measured from ground surface to top of utility. Potholes were performed at locations specified by the client. Utility size and material are based on visual estimates and may vary. Approximate coordinates (Lat/Long) are provided to show a general area of pothole location and are for information purposes only.

1385 Old Temescal Rd., Suite 100
Corona, CA 92881
1-888-90-BELOW

Date: **October 18, 2023**
Technician: **Ruben Lopez**
Project Name: **MacArthur Lake Potholing**
Project Address: **S Park View Street, Los Angeles, CA 90057**
C Below Project No. **22-5694**

Project Summary

No.	Utility	Size (in)	Material	Top Depth (ft)	Direction	Location	Surface
15	Water	4	Steel	1.76	N-S	South East Side of 653 S Alvarado St., North of Address 2316 7th St.	Soil
16	Comm	(3) 4	PVC	3.02	N-S	North East Bound on S Lake St. in Parking Stall, South West of 2130 W 7th St.	Soil

Comments: Top depth is measured from ground surface to top of utility. Potholes were performed at locations specified by the client. Utility size and material are based on visual estimates and may vary. Approximate coordinates (Lat/Long) are provided to show a general area of pothole location and are for information purposes only.

POTHOLING DATA SHEET

1385 Old Temescal RD., STE 100 CORONA, CA 92881
OFFICE: (888) 902-3569
FAX: (951) 356-4830

Technician Name	Date	C Below Project No.
Ruben Lopez	10-02-2023	22-5694

Project Name	Project Address
MacArthur Lake Potholing	S Park View Street, Los Angeles, CA 90057

Client Company	Contact
Guida Surveying, Inc.	Tim Fettig

Pothole No.	Location
1	North West Bound on 7th St. in Bike Lane, North East of Address 2200

Surface Type: Asphalt

Thickness: 0.60 (feet)

Profile View (not to scale)
Measured Distance from Finished Surface

Top: 1.70 (feet)

Bottom: Unknown (feet)

Size: Unknown (in)

Utility: Water

Material: Encasement

Direction: E-W

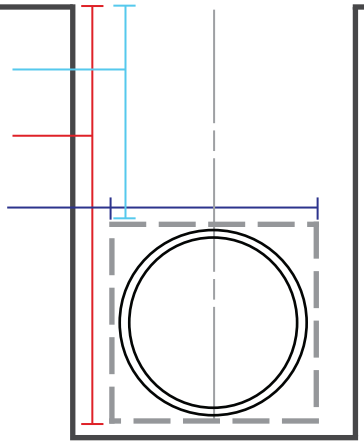

Notes:

Approximate Coordinate: 34.057106,-118.278003
Encountered an encasement around Water line.

PHYSICAL SWING TIE INFORMATION

No.	Distance (ft)	Dir.	From Permanent Existing Fixture
1	9.40	S	Storm Drain Manhole

No.	Distance (ft)	Dir.	From Permanent Existing Fixture
2	35.00	W	Water Valve

No.	Distance (ft)	Dir.	From Permanent Existing Fixture
3	39.60	E	Street Sign

LOCATION DETAIL







No.	Utility	Size (in)	Material	Top Depth (ft)	Direction	Location	Surface
1	Water	Unknown	Encasement	1.70	E-W	North West Bound on 7th St. in Bike Lane, North East of Address 2200	Asphalt



Photo 1



Photo 2



Photo 3



Photo 4

Comments:

C BELOW SUBSURFACE IMAGING An RMA Company

POTHOLING DATA SHEET

1385 Old Temescal RD., STE 100 CORONA, CA 92881
OFFICE: (888) 902-3569
FAX: (951) 356-4830

Technician Name	Date	C Below Project No.
Ruben Lopez	10-05-2023	22-5694

Project Name	Project Address
MacArthur Lake Potholing	S Park View Street, Los Angeles, CA 90057

Client Company	Contact
Guida Surveying, Inc.	Tim Fettig

Pothole No.	Location
2	South East Bound on 7th Street in #2 Lane, North East of Address 2200

Surface Type: Asphalt

Thickness: 0.60 (feet)

Profile View (not to scale)
Measured Distance from Finished Surface

Top: 3.44 (feet)

Bottom: Unknown (feet)

Size: Unknown (in)

Utility: Comm

Material: Encasement

Direction: E-W

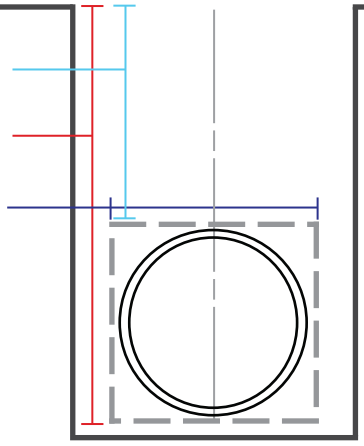

Notes:

Approximate Coordinate: 34.056926,-118.278039
Encountered numerous amounts of concrete, asphalt, and trash debris.
Unable to get bottom and other side of encasement due to size.
Concrete on encasement was breaking off.

PHYSICAL SWING TIE INFORMATION

No.	Distance (ft)	Dir.	From Permanent Existing Fixture
1	6.80	W	Communication Manhole
2	19.30	E	Street Light
3	28.60	N	Water Valve

LOCATION DETAIL







No.	Utility	Size (in)	Material	Top Depth (ft)	Direction	Location	Surface
2	Comm	Unknown	Encasement	3.44	E-W	South East Bound on 7th Street in #2 Lane, North East of Address 2200	Asphalt



Photo 1



Photo 2



Photo 3



Photo 4

Comments:

POTHOLING DATA SHEET

1385 Old Temescal RD., STE 100 CORONA, CA 92881
OFFICE: (888) 902-3569
FAX: (951) 356-4830

Technician Name	Date	C Below Project No.
Ruben Lopez	10-03-2023	22-5694

Project Name	Project Address
MacArthur Lake Potholing	S Park View Street, Los Angeles, CA 90057

Client Company	Contact
Guida Surveying, Inc.	Tim Fettig

Pothole No.	Location
3	South East Bound on 7th Street in #1 Lane, North East of Address 2200

Surface Type: Asphalt

Thickness: 1.00 (feet)

Top: 3.80 (feet)

Bottom: 4.46 (feet)

Size: 8 (in)

Utility: Water

Material: Steel

Direction: E-W

Profile View (not to scale)
Measured Distance from Finished Surface

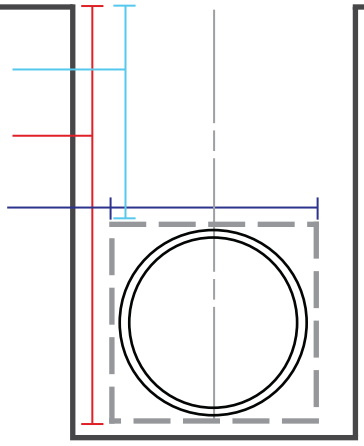

Notes:

Approximate Coordinate: 34.056940,-118.277948
Ran into 6.00 ft. of slurry. Depth is approximately 3.80 ft. as we needed to undermine to the South due to GPS marking that Guida. Marked was off by 1.00 ft.

PHYSICAL SWING TIE INFORMATION

No.	Distance (ft)	Dir.	From Permanent Existing Fixture
1	16.20	NW	Sewer Manhole
2	19.10	W	Communication Manhole
3	55.00	SW	Street Light

LOCATION DETAIL







No.	Utility	Size (in)	Material	Top Depth (ft)	Direction	Location	Surface
3	Water	8	Steel	3.80	E-W	South East Bound on 7th Street in #1 Lane, North East of Address 2200	Asphalt



Photo 1



Photo 2



Photo 3



Photo 4

Comments:

POTHOLING DATA SHEET

1385 Old Temescal RD., STE 100 CORONA, CA 92881
OFFICE: (888) 902-3569
FAX: (951) 356-4830

Technician Name	Date	C Below Project No.
Ruben Lopez	10-03-2023	22-5694

Project Name	Project Address
MacArthur Lake Potholing	S Park View Street, Los Angeles, CA 90057

Client Company	Contact
Guida Surveying, Inc.	Tim Fettig

Pothole No.	Location
4	South East Bound on 7th Street in #1 Lane, North East of Address 2200

Surface Type: Asphalt

Thickness: 1.00 (feet)

Profile View (not to scale)
Measured Distance from Finished Surface

Top: N/A (feet)

Bottom: 1.12 (feet)

Size: N/A (in)

Utility: Dry Hole

Material: N/A

Direction: N/A

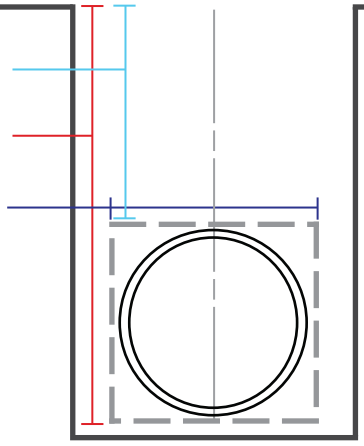

Notes:

Approximate Coordinate: 34.057019,-118.278080
Encountered concrete/slurry and attempted to cut through it. I was able to get through one inch in twenty minutes, and once I got through the first inch, I was unable to get past it. PH was on the client's GPS location. No USA markings on the ground indicating another utility running through.

PHYSICAL SWING TIE INFORMATION

No.	Distance (ft)	Dir.	From Permanent Existing Fixture
1	5.60	N	Sewer Manhole

No.	Distance (ft)	Dir.	From Permanent Existing Fixture
2	25.00	W	Street Sign

No.	Distance (ft)	Dir.	From Permanent Existing Fixture
3	41.50	SW	Communication Manhole

LOCATION DETAIL







No.	Utility	Size (in)	Material	Top Depth (ft)	Direction	Location	Surface
4	Dry Hole	N/A	N/A	N/A	N/A	South East Bound on 7th Street in #1 Lane, North East of Address 2200	Asphalt



Photo 1

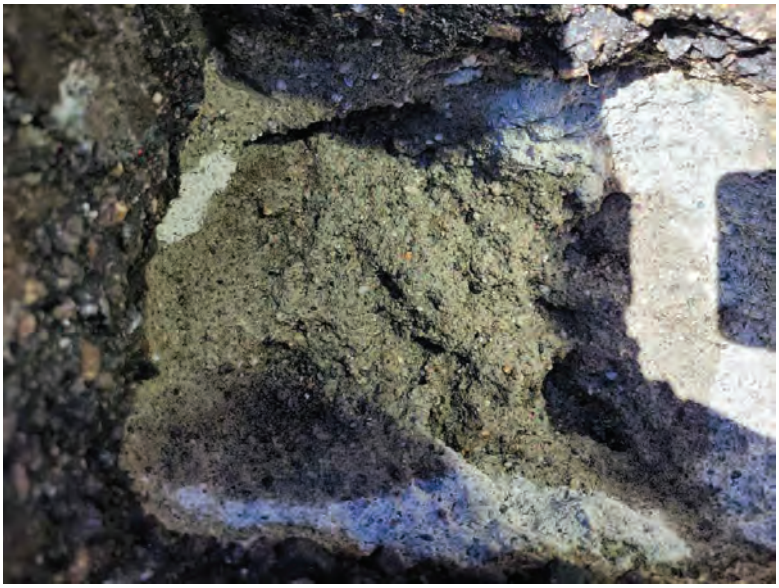

Photo 2



Photo 3



Photo 4

Comments:

POTHOLING DATA SHEET

1385 Old Temescal RD., STE 100 CORONA, CA 92881
OFFICE: (888) 902-3569
FAX: (951) 356-4830

Technician Name	Date	C Below Project No.
Ruben Lopez	10-03-2023	22-5694

Project Name	Project Address
MacArthur Lake Potholing	S Park View Street, Los Angeles, CA 90057

Client Company	Contact
Guida Surveying, Inc.	Tim Fettig

Pothole No.	Location
5	North West Bound on 7th Street in #1 Lane, North East of Address 2200

Surface Type: Asphalt

Thickness: 0.90 (feet)

Profile View (not to scale)
Measured Distance from Finished Surface

Top: N/A (feet)

Bottom: 1.00 (feet)

Size: N/A (in)

Utility: Dry Hole

Material: N/A

Direction: N/A

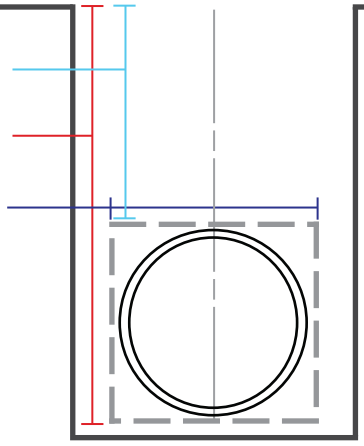

Notes:

Approximate Coordinate: 34.057025, -118.278029
Potholed on client's mark and encountered concrete that stopped going further. There were no other USA markings on the ground, and we chose not to break through concrete.
No utility exposed during excavation, Dry Hole.

PHYSICAL SWING TIE INFORMATION

No.	Distance (ft)	Dir.	From Permanent Existing Fixture
1	19.20	SW	Sewer Manhole

No.	Distance (ft)	Dir.	From Permanent Existing Fixture
2	39.30	E	Street Light

No.	Distance (ft)	Dir.	From Permanent Existing Fixture
3	38.80	SE	Water Valve

LOCATION DETAIL







No.	Utility	Size (in)	Material	Top Depth (ft)	Direction	Location	Surface
5	Dry Hole	N/A	N/A	N/A	N/A	North West Bound on 7th Street in #1 Lane, North East of Address 2200	Asphalt



Photo 1



Photo 2



Photo 3



Photo 4

Comments:

POTHOLING DATA SHEET

1385 Old Temescal RD., STE 100 CORONA, CA 92881
OFFICE: (888) 902-3569
FAX: (951) 356-4830

Technician Name	Date	C Below Project No.
Ruben Lopez	10-02-2023	22-5694

Project Name	Project Address
MacArthur Lake Potholing	S Park View Street, Los Angeles, CA 90057
Client Company	Contact
Guida Surveying, Inc.	Tim Fettig

Pothole No.	Location
6	North West Bound on 7th Street in #2 Lane, North East of Address 2200

Surface Type: Asphalt

Thickness: 1.00 (feet)

Profile View (not to scale)
Measured Distance from Finished Surface

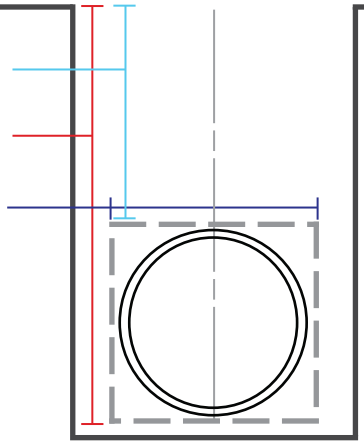

Top: 1.80 (feet)

Bottom: Unknown (feet)

Size: Unknown (in)

Utility: Comm

Material: Encasement

Direction: E-W

Notes:

Approximate Coordinate: 34.057086,-118.278007
Unable to get edges and bottom of encasement due to size.

PHYSICAL SWING TIE INFORMATION

No.	Distance (ft)	Dir.	From Permanent Existing Fixture
1	21.00	S	Storm Drain Manhole
2	31.10	SW	Water Valve
3	49.70	SE	Street Sign

LOCATION DETAIL







No.	Utility	Size (in)	Material	Top Depth (ft)	Direction	Location	Surface
6	Comm	Unknown	Encasement	1.80	E-W	North West Bound on 7th Street in #2 Lane, North East of Address 2200	Asphalt



Photo 1

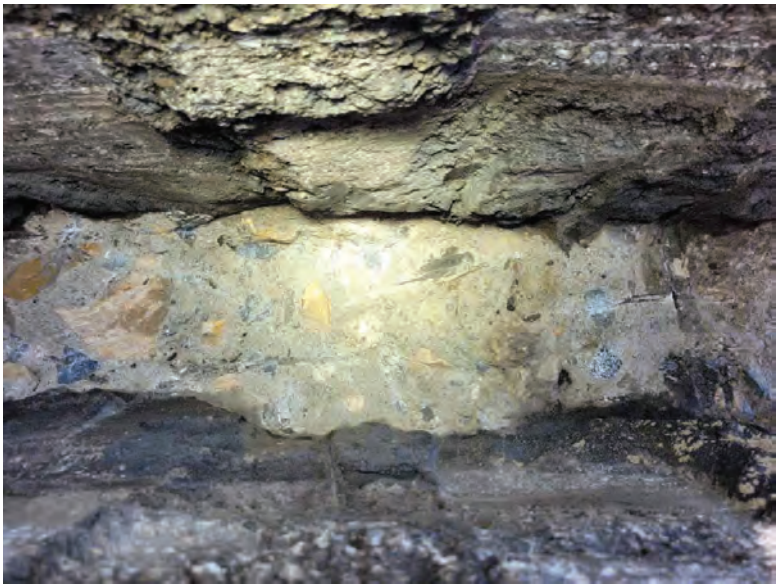

Photo 2



Photo 3



Photo 4

Comments:

POTHOLING DATA SHEET

1385 Old Temescal RD., STE 100 CORONA, CA 92881
OFFICE: (888) 902-3569
FAX: (951) 356-4830

Technician Name	Date	C Below Project No.
Ruben Lopez	10-06-2023	22-5694

Project Name	Project Address
MacArthur Lake Potholing	S Park View Street, Los Angeles, CA 90057

Client Company	Contact
Guida Surveying, Inc.	Tim Fettig

Pothole No.	Location
7	North East Bound on S Lake St. in Parking Stall, West of 2130 W 7th St.

Surface Type: Asphalt

Thickness: 0.60 (feet)

Profile View (not to scale)
Measured Distance from Finished Surface

Top: 3.88 (feet)

Bottom: 4.21 (feet)

Size: 4 (in)

Utility: Unknown

Material: Steel

Direction: N-S

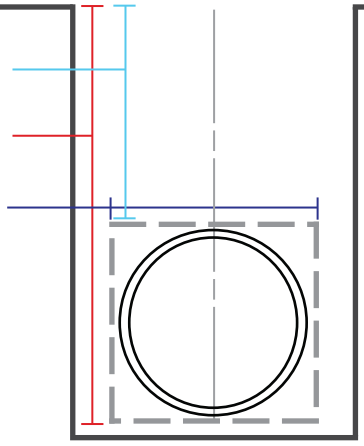

Notes:

Approximate Coordinate: 34.056683,-118.278060

Went down to desired depth and was unable to locate train tracks. PH was right on Guida GPS mark.

While trying to locate train tracks, I undermineted to the East and encountered a 4" unknown steel line at 3.88' running north to South. Possible gas line according to USA marking, USA marking was 2' off from where unknown line was encountered.

PHYSICAL SWING TIE INFORMATION

No.	Distance (ft)	Dir.	From Permanent Existing Fixture
1	7.90	W	Parking Meter
2	12.50	SW	Street Sign
3	36.40	E	Parking Meter

LOCATION DETAIL

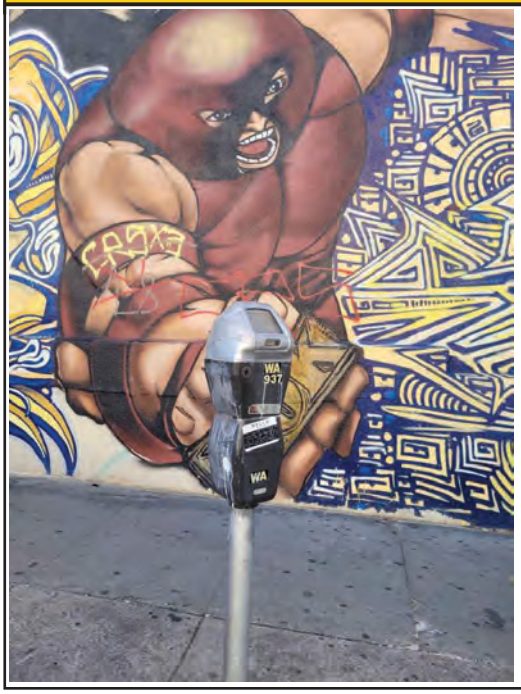

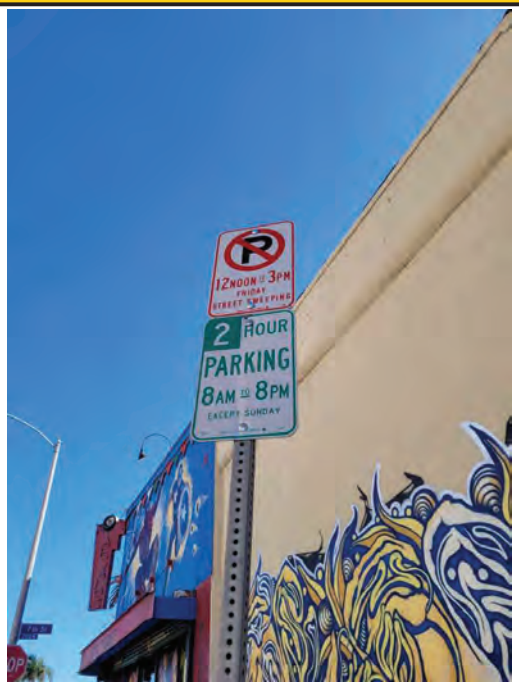

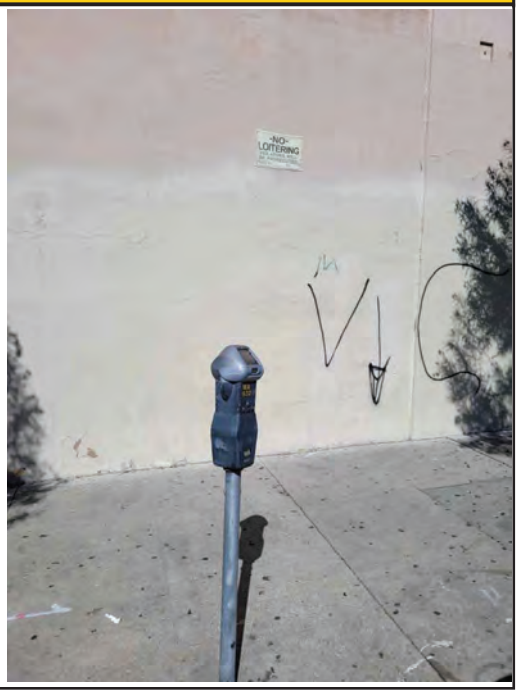

No.	Utility	Size (in)	Material	Top Depth (ft)	Direction	Location	Surface
7	Unknown	4	Steel	3.88	N-S	North East Bound on S Lake St. in Parking Stall, West of 2130 W 7th St.	Asphalt



Photo 1



Photo 2



Photo 3



Photo 4

Comments:

POTHOLING DATA SHEET

C BELOW SUBSURFACE IMAGING An RMA Company

1385 Old Temescal RD., STE 100 CORONA, CA 92881
OFFICE: (888) 902-3569
FAX: (951) 356-4830

Technician Name	Date	C Below Project No.
Ruben Lopez	10-06-2023	22-5694

Project Name	Project Address
MacArthur Lake Potholing	S Park View Street, Los Angeles, CA 90057

Client Company	Contact
Guida Surveying, Inc.	Tim Fettig

Pothole No.	Location
8	North East Bound on S Lake St. in Parking Stall, West of 2130 W 7th St.

Surface Type: Asphalt

Thickness: 0.60 (feet)

Top: N/A (feet)

Bottom: 10.20 (feet)

Size: N/A (in)

Utility: Dry Hole

Material: N/A

Direction: N/A

Profile View (not to scale)
Measured Distance from Finished Surface

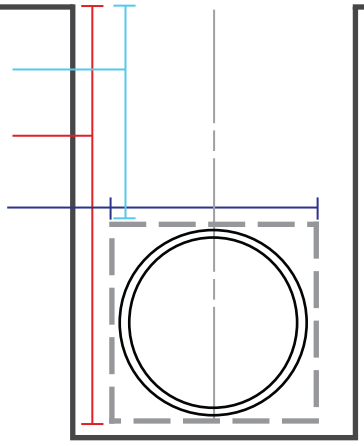

Notes:

Approximate Coordinate: 34.056683,-118.278060
Went down to desired depth and undermined to the East and West. No USA markings on the floor and went based on Guida GPS marking.
No utility exposed during excavation, Dry Hole.

PHYSICAL SWING TIE INFORMATION

No.	Distance (ft)	Dir.	From Permanent Existing Fixture
1	10.90	NW	Communication Box

No.	Distance (ft)	Dir.	From Permanent Existing Fixture
2	10.50	SW	Parking Meter

No.	Distance (ft)	Dir.	From Permanent Existing Fixture
3	36.40	E	Parking Meter

LOCATION DETAIL



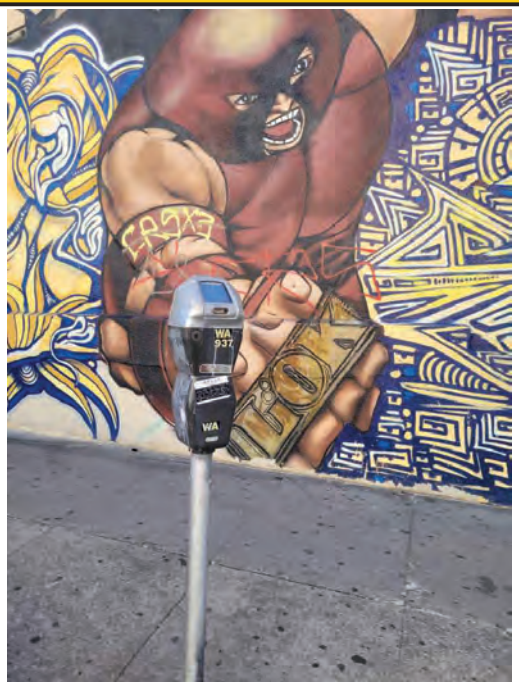



No.	Utility	Size (in)	Material	Top Depth (ft)	Direction	Location	Surface
8	Dry Hole	N/A	N/A	N/A	N/A	North East Bound on S Lake St. in Parking Stall, West of 2130 W 7th St.	Asphalt



Photo 1



Photo 2



Photo 3



Photo 4

Comments:

C BELOW SUBSURFACE IMAGING An RMA Company

1385 Old Temescal RD., STE 100 CORONA, CA 92881
OFFICE: (888) 902-3569
FAX: (951) 356-4830

POTHOLING DATA SHEET

Technician Name	Date	C Below Project No.
Ruben Lopez	10-06-2023	22-5694

Project Name	Project Address
MacArthur Lake Potholing	S Park View Street, Los Angeles, CA 90057

Client Company	Contact
Guida Surveying, Inc.	Tim Fettig

Pothole No.	Location
9	North East Bound on S Lake St. in Parking Stall, West of 2130 W 7th St.

Surface Type: Asphalt

Thickness: 0.60 (feet)

Top: N/A (feet)

Bottom: 10.60 (feet)

Size: N/A (in)

Utility: Dry Hole

Material: N/A

Direction: N/A

Profile View (not to scale)
Measured Distance from Finished Surface

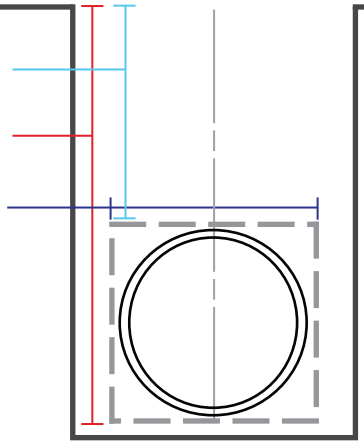

Notes:

Approximate Coordinate: 34.056683,-118.278060
Attempted to find old train tracks underneath asphalt. Went down to desired depth. Potholed directly on Guida GPS location. Undermined both East and West.
No utility exposed during excavation, Dry Hole.

PHYSICAL SWING TIE INFORMATION

No.	Distance (ft)	Dir.	From Permanent Existing Fixture
1	13.00	W	Communication Box

No.	Distance (ft)	Dir.	From Permanent Existing Fixture
2	47.30	NE	Fire Hydrant

No.	Distance (ft)	Dir.	From Permanent Existing Fixture
3	31.00	E	Parking Meter

LOCATION DETAIL

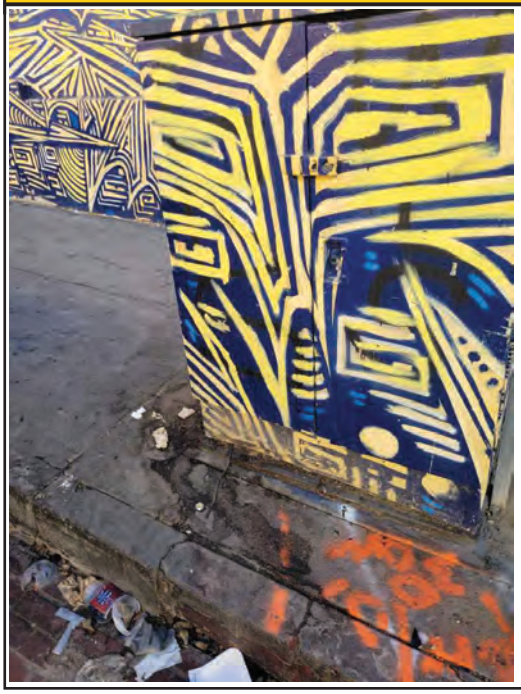

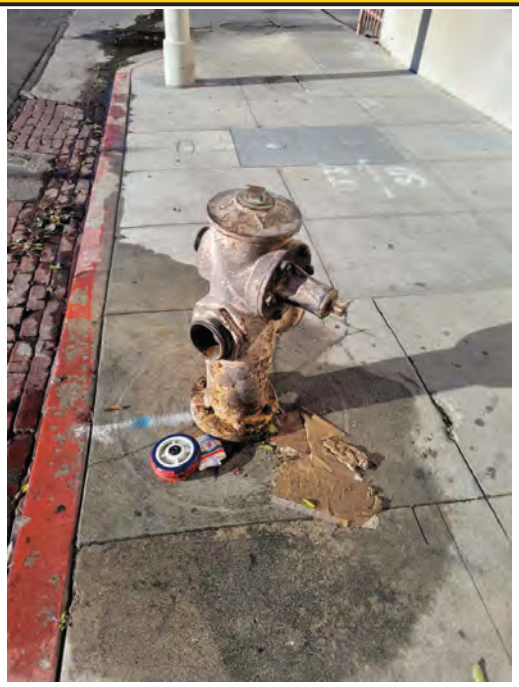



No.	Utility	Size (in)	Material	Top Depth (ft)	Direction	Location	Surface
9	Dry Hole	N/A	N/A	N/A	N/A	North East Bound on S Lake St. in Parking Stall, West of 2130 W 7th St.	Asphalt



Photo 1



Photo 2



Photo 3



Photo 4

Comments:

POTHOLING DATA SHEET

1385 Old Temescal RD., STE 100 CORONA, CA 92881
OFFICE: (888) 902-3569
FAX: (951) 356-4830

Technician Name	Date	C Below Project No.
Ruben Lopez	10-05-2023	22-5694

Project Name	Project Address
MacArthur Lake Potholing	S Park View Street, Los Angeles, CA 90057

Client Company	Contact
Guida Surveying, Inc.	Tim Fettig

Pothole No.	Location
10	South West Bound on S Lake St., West of 2130 W 7th St.

Surface Type: Asphalt

Thickness: 0.60 (feet)

Top: 7.30 (feet)

Bottom: 8.30 (feet)

Size: 12 (in)

Utility: Unknown

Material: Unknown

Direction: N-S

Profile View (not to scale)
Measured Distance from Finished Surface

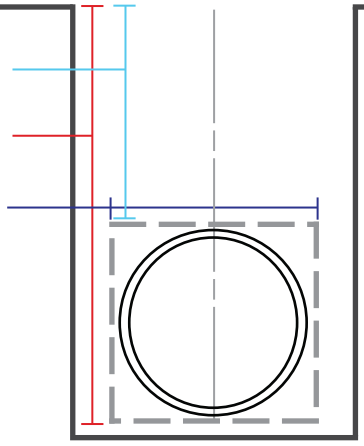

Notes:

Approximate Coordinate: 34.056681,-118.278155
Went down to desired depth and was unable to locate train tracks.
Pothole was directly on Guida GPS mark.
While trying to locate train tracks, undermined to the West and encountered a line. There were no USA markings on floor to determine the utility.

PHYSICAL SWING TIE INFORMATION

No.	Distance (ft)	Dir.	From Permanent Existing Fixture
1	22.50	E	Parking Meter

No.	Distance (ft)	Dir.	From Permanent Existing Fixture
2	45.50	NE	Fire Hydrant

No.	Distance (ft)	Dir.	From Permanent Existing Fixture
3	21.00	W	Communication Box

LOCATION DETAIL



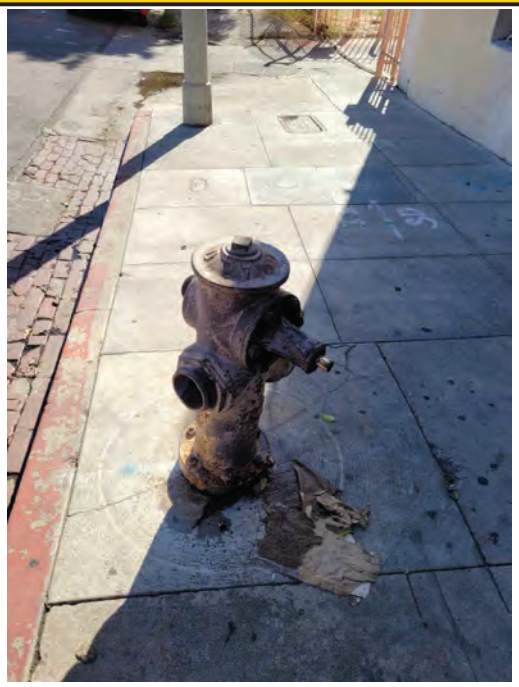



No.	Utility	Size (in)	Material	Top Depth (ft)	Direction	Location	Surface
10	Unknown	12	Unknown	7.30	N-S	South West Bound on S Lake St., West of 2130 W 7th St.	Asphalt



Photo 1



Photo 2



Photo 3

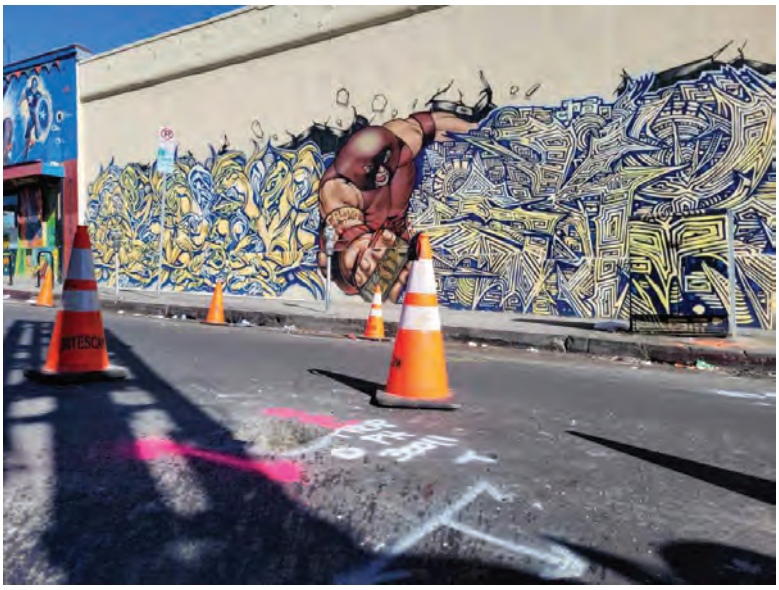

Photo 4

Comments:

C BELOW SUBSURFACE IMAGING An RMA Company

1385 Old Temescal RD., STE 100 CORONA, CA 92881
OFFICE: (888) 902-3569
FAX: (951) 356-4830

POTHOLING DATA SHEET

Technician Name	Date	C Below Project No.
Ruben Lopez	10-05-2023	22-5694

Project Name	Project Address
MacArthur Lake Potholing	S Park View Street, Los Angeles, CA 90057

Client Company	Contact
Guida Surveying, Inc.	Tim Fettig

Pothole No.	Location
11	South West Bound on S Lake St., West of 2130 W 7th St.

Surface Type: Asphalt

Thickness: 0.60 (feet)

Top: N/A (feet)

Bottom: 10.80 (feet)

Size: N/A (in)

Utility: Dry Hole

Material: N/A

Direction: N/A

Profile View (not to scale)
Measured Distance from Finished Surface

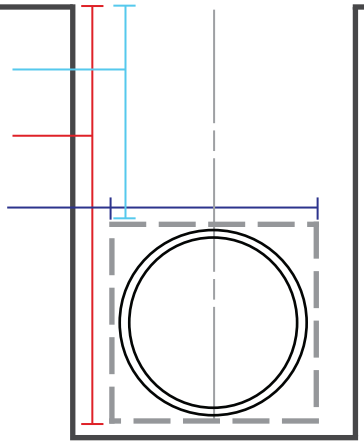

Notes:

Approximate Coordinate: 34.056681,-118.278155
Went down to desired depth and undermined both East and West.
According to the USA marking on the floor next to the manhole, the line is 21.00 ft. deep.
No utility exposed during excavation, Dry Hole.

PHYSICAL SWING TIE INFORMATION

No.	Distance (ft)	Dir.	From Permanent Existing Fixture
1	17.70	SE	Parking Meter

No.	Distance (ft)	Dir.	From Permanent Existing Fixture
2	28.10	NE	Fire Hydrant

No.	Distance (ft)	Dir.	From Permanent Existing Fixture
3	31.00	W	Communication Box

LOCATION DETAIL







No.	Utility	Size (in)	Material	Top Depth (ft)	Direction	Location	Surface
11	Dry Hole	N/A	N/A	N/A	N/A	South West Bound on S Lake St., West of 2130 W 7th St.	Asphalt



Photo 1



Photo 2



Photo 3



Photo 4

Comments:

POTHOLING DATA SHEET

1385 Old Temescal RD., STE 100 CORONA, CA 92881
OFFICE: (888) 902-3569
FAX: (951) 356-4830

Technician Name	Date	C Below Project No.
Ruben Lopez	10-05-2023	22-5694

Project Name	Project Address
MacArthur Lake Potholing	S Park View Street, Los Angeles, CA 90057

Client Company	Contact
Guida Surveying, Inc.	Tim Fettig

Pothole No.	Location
12	South West Bound on S Lake St. in Parking Stall, West of 2130 W 7th St.

Surface Type: Asphalt

Thickness: 0.60 (feet)

Profile View (not to scale)
Measured Distance from Finished Surface

Top: 2.80 (feet)

Bottom: 3.46 (feet)

Size: 8 (in)

Utility: Water

Material: Steel

Direction: N-S

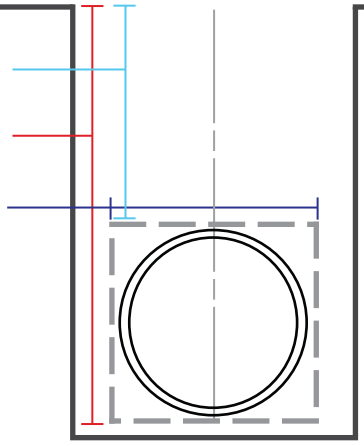

Notes:

Approximate Coordinate: 34.056692, -118.278169

PHYSICAL SWING TIE INFORMATION

No.	Distance (ft)	Dir.	From Permanent Existing Fixture
1	14.20	SE	Parking Meter

No.	Distance (ft)	Dir.	From Permanent Existing Fixture
2	25.10	NE	Fire Hydrant

No.	Distance (ft)	Dir.	From Permanent Existing Fixture
3	36.10	W	Communication Box

LOCATION DETAIL





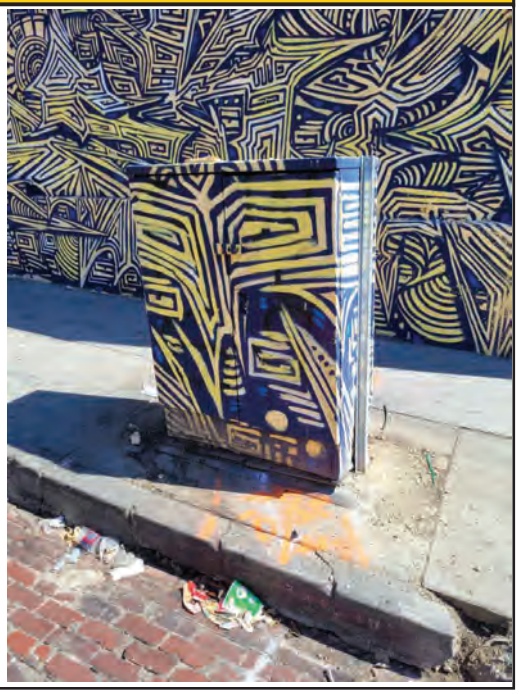

No.	Utility	Size (in)	Material	Top Depth (ft)	Direction	Location	Surface
12	Water	8	Steel	2.80	N-S	South West Bound on S Lake St. in Parking Stall, West of 2130 W 7th St.	Asphalt



Photo 1



Photo 2



Photo 3



Photo 4

Comments:

C BELOW SUBSURFACE IMAGING An RMA Company

POTHOLING DATA SHEET

1385 Old Temescal RD., STE 100 CORONA, CA 92881
OFFICE: (888) 902-3569
FAX: (951) 356-4830

Technician Name	Date	C Below Project No.
Ruben Lopez	10-02-2023	22-5694

Project Name	Project Address
MacArthur Lake Potholing	S Park View Street, Los Angeles, CA 90057

Client Company	Contact
Guida Surveying, Inc.	Tim Fettig

Pothole No.	Location
13	South East Side of 653 S Alvarado St., North of Address 2214 7th St.

Surface Type: Soil

Thickness: N/A (feet)

Profile View (not to scale)
Measured Distance from Finished Surface

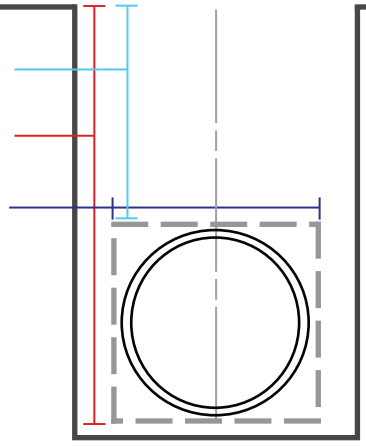

Top: 1.30 (feet)

Bottom: 1.63 (feet)

Size: 4 (in)

Utility: Water

Material: PVC

Direction: E-W

Notes:

Approximate Coordinate: 34.057308, -118.278250

PHYSICAL SWING TIE INFORMATION

No.	Distance (ft)	Dir.	From Permanent Existing Fixture
1	5.40	W	Water Valve Box

No.	Distance (ft)	Dir.	From Permanent Existing Fixture
2	11.60	N	Corner of Fence

No.	Distance (ft)	Dir.	From Permanent Existing Fixture
3	12.70	W	Street Light Pull Box

LOCATION DETAIL







No.	Utility	Size (in)	Material	Top Depth (ft)	Direction	Location	Surface
13	Water	4	PVC	1.30	E-W	South East Side of 653 S Alvarado St., North of Address 2214 7th St.	Soil



Photo 1



Photo 2



Photo 3



Photo 4

Comments:

C BELOW SUBSURFACE IMAGING An RMA Company

POTHOLING DATA SHEET

1385 Old Temescal RD., STE 100 CORONA, CA 92881
OFFICE: (888) 902-3569
FAX: (951) 356-4830

Technician Name	Date	C Below Project No.
Ruben Lopez	10-02-2023	22-5694

Project Name	Project Address
MacArthur Lake Potholing	S Park View Street, Los Angeles, CA 90057
Client Company	Contact
Guida Surveying, Inc.	Tim Fettig

Pothole No.	Location
14	South East Side of 653 S Alvarado St., North of Address 2316 7th St.

Surface Type: Soil

Thickness: N/A (feet)

Top: N/A (feet)

Bottom: 10.10 (feet)

Size: N/A (in)

Utility: Dry Hole

Material: N/A

Direction: N/A

Profile View (not to scale)
Measured Distance from Finished Surface

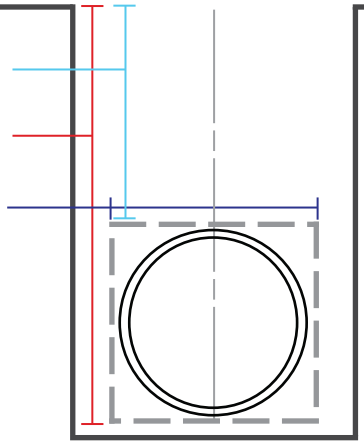

Notes:

Approximate Coordinate: 34.057816, -118.279408
Potholed directly on Guida's GPS marks painted that morning.
No utility exposed during excavation, Dry Hole.
Satellite Pothole performed, see PH-14A for additional information.

PHYSICAL SWING TIE INFORMATION

No.	Distance (ft)	Dir.	From Permanent Existing Fixture
1	6.00	E	Water Valve Box

No.	Distance (ft)	Dir.	From Permanent Existing Fixture
2	6.00	SE	Utility/Street Light Pole

No.	Distance (ft)	Dir.	From Permanent Existing Fixture
3	2.00	W	Edge of Sidewalk

LOCATION DETAIL







No.	Utility	Size (in)	Material	Top Depth (ft)	Direction	Location	Surface
14	Dry Hole	N/A	N/A	N/A	N/A	South East Side of 653 S Alvarado St., North of Address 2316 7th St.	Soil



Photo 1



Photo 2



Photo 3



Photo 4

Comments:

C BELOW SUBSURFACE IMAGING An RMA Company

POTHOLING DATA SHEET

1385 Old Temescal RD., STE 100 CORONA, CA 92881
OFFICE: (888) 902-3569
FAX: (951) 356-4830

Technician Name	Date	C Below Project No.
Ruben Lopez	10-02-2023	22-5694

Project Name	Project Address
MacArthur Lake Potholing	S Park View Street, Los Angeles, CA 90057

Client Company	Contact
Guida Surveying, Inc.	Tim Fettig

Pothole No.	Location
14A	South East Side of 653 S Alvarado St., North of Address 2316 7th St.

Surface Type: Soil

Thickness: N/A (feet)

Top: 3.30 (feet)

Bottom: 3.63 (feet)

Size: (2) 4 (in)

Utility: Electric

Material: PVC

Direction: N-S

Profile View (not to scale)
Measured Distance from Finished Surface

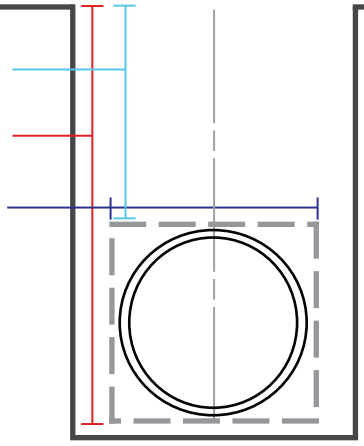

Notes:

Approximate Coordinate: 34.057816, -118.279408
Encountered a bundle of Electric lines while undermining and looking for the irrigation.

PHYSICAL SWING TIE INFORMATION

No.	Distance (ft)	Dir.	From Permanent Existing Fixture
1	3.80	E	Water Valve
2	4.30	W	Edge of Sidewalk
3	4.00	NE	Water Valve Box Enclosure

LOCATION DETAIL



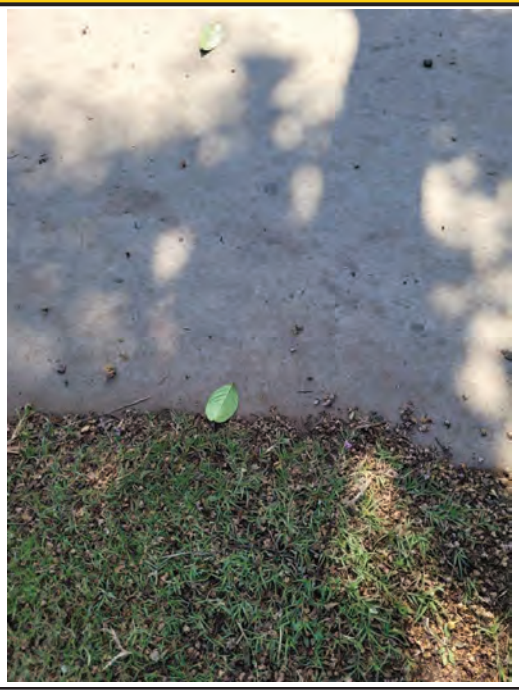



No.	Utility	Size (in)	Material	Top Depth (ft)	Direction	Location	Surface
14A	Electric	(2) 4	PVC	3.30	N-S	South East Side of 653 S Alvarado St., North of Address 2316 7th St.	Soil



Photo 1



Photo 2



Photo 3



Photo 4

Comments:

POTHOLING DATA SHEET

1385 Old Temescal RD., STE 100 CORONA, CA 92881
OFFICE: (888) 902-3569
FAX: (951) 356-4830

Technician Name	Date	C Below Project No.
Ruben Lopez	10-02-2023	22-5694

Project Name	Project Address
MacArthur Lake Potholing	S Park View Street, Los Angeles, CA 90057

Client Company	Contact
Guida Surveying, Inc.	Tim Fettig

Pothole No.	Location
15	South East Side of 653 S Alvarado St., North of Address 2316 7th St.

Surface Type: Soil

Thickness: N/A (feet)

Profile View (not to scale)
Measured Distance from Finished Surface

Top: 1.76 (feet)

Bottom: 2.09 (feet)

Size: 4 (in)

Utility: Water

Material: Steel

Direction: N-S

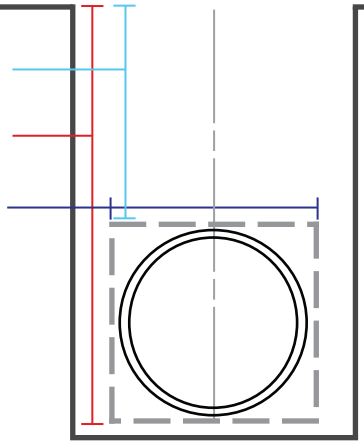

Notes:

Approximate Coordinate: 34.057795,-118.279429

PHYSICAL SWING TIE INFORMATION

No.	Distance (ft)	Dir.	From Permanent Existing Fixture
1	2.50	NW	Water Valve
2	9.00	W	Edge of Sidewalk
3	3.30	SW	Utility/Street Light Pole

LOCATION DETAIL





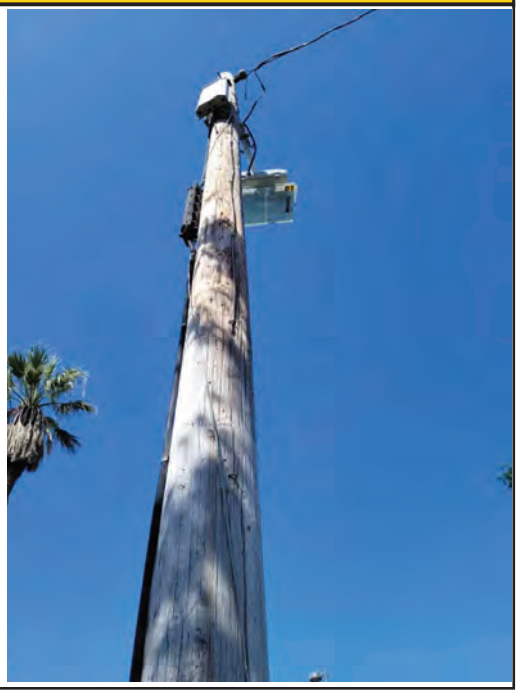

No.	Utility	Size (in)	Material	Top Depth (ft)	Direction	Location	Surface
15	Water	4	Steel	1.76	N-S	South East Side of 653 S Alvarado St., North of Address 2316 7th St.	Soil



Photo 1



Photo 2



Photo 3



Photo 4

Comments:

POTHOLING DATA SHEET

1385 Old Temescal RD., STE 100 CORONA, CA 92881
OFFICE: (888) 902-3569
FAX: (951) 356-4830

Technician Name	Date	C Below Project No.
Ruben Lopez	10-06-2023	22-5694

Project Name	Project Address
MacArthur Lake Potholing	S Park View Street, Los Angeles, CA 90057

Client Company	Contact
Guida Surveying, Inc.	Tim Fettig

Pothole No.	Location
16	North East Bound on S Lake St. in Parking Stall, South West of 2130 W 7th St.

Surface Type: Asphalt

Thickness: 0.60 (feet)

Profile View (not to scale)
Measured Distance from Finished Surface

Top: 3.02 (feet)

Bottom: 3.70 (feet)

Size: (3) 4 (in)

Utility: Comm

Material: PVC

Direction: N-S

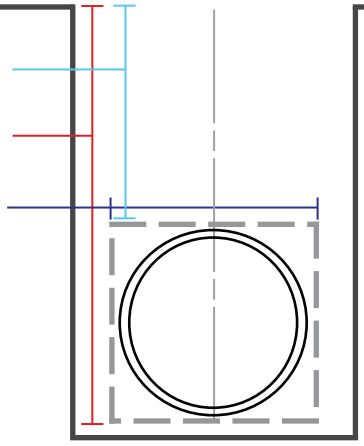

Notes:

Approximate Coordinate: 34.056575,-118.278118
Encountered a bundle of 4 inch PVC Communication lines running North to South. Bottom depth was measured from the bottom of the bundle.

PHYSICAL SWING TIE INFORMATION

No.	Distance (ft)	Dir.	From Permanent Existing Fixture
1	11.10	NW	Parking Meter
2	21.80	S	Communication Box
3	40.80	NE	Fire Hydrant

LOCATION DETAIL



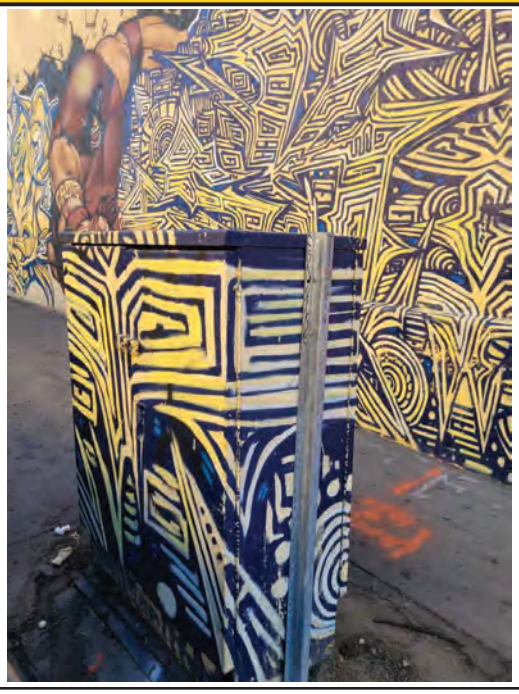

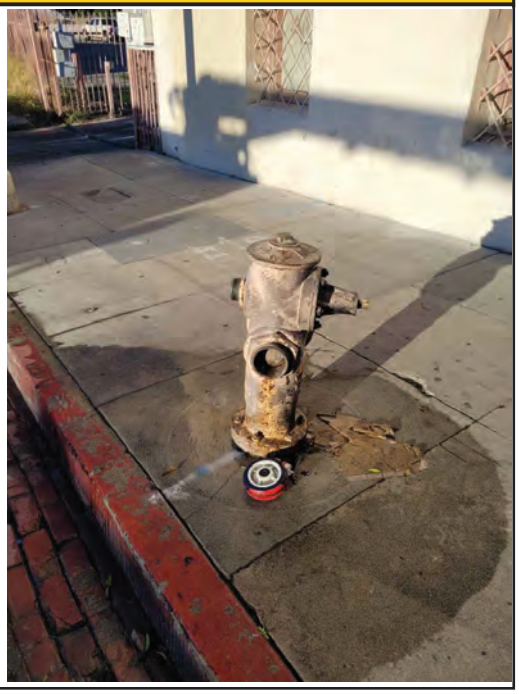

No.	Utility	Size (in)	Material	Top Depth (ft)	Direction	Location	Surface
16	Comm	(3) 4	PVC	3.02	N-S	North East Bound on S Lake St. in Parking Stall, South West of 2130 W 7th St.	Asphalt



Photo 1



Photo 2

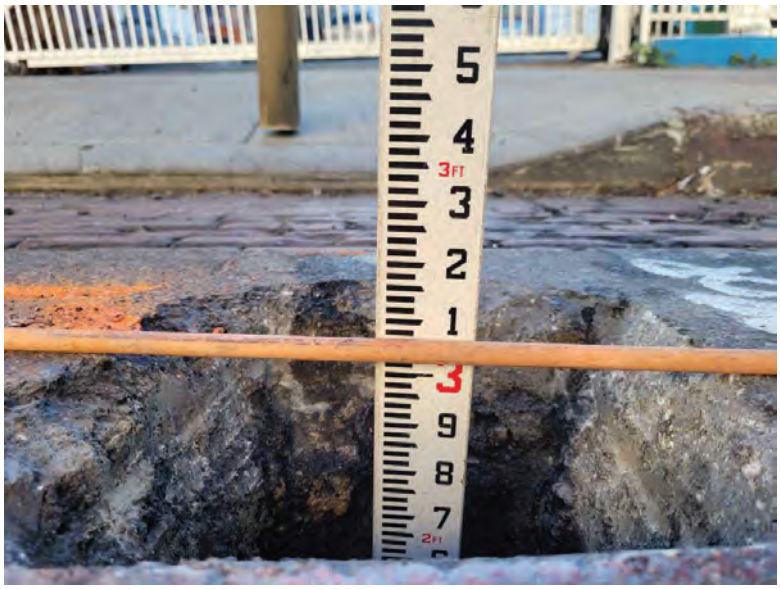

Photo 3



Photo 4

Comments:

BUREAU OF ENGINEERING

MACARTHUR LAKE
STORMWATER CAPTURE PROJECT
PROJECT NO. S33WMLRP, S343MSWC, S043MSWC

ATTACHMENT 5
AS-BUILT PLANS FROM METROLA PROJECT

JANUARY 2026

City of Los Angeles
California

Department of Public Works
Bureau of Engineering

ENGINEERING
CITY OF LOS ANGELES

THIS PAGE INTENTIONALLY LEFT BLANK

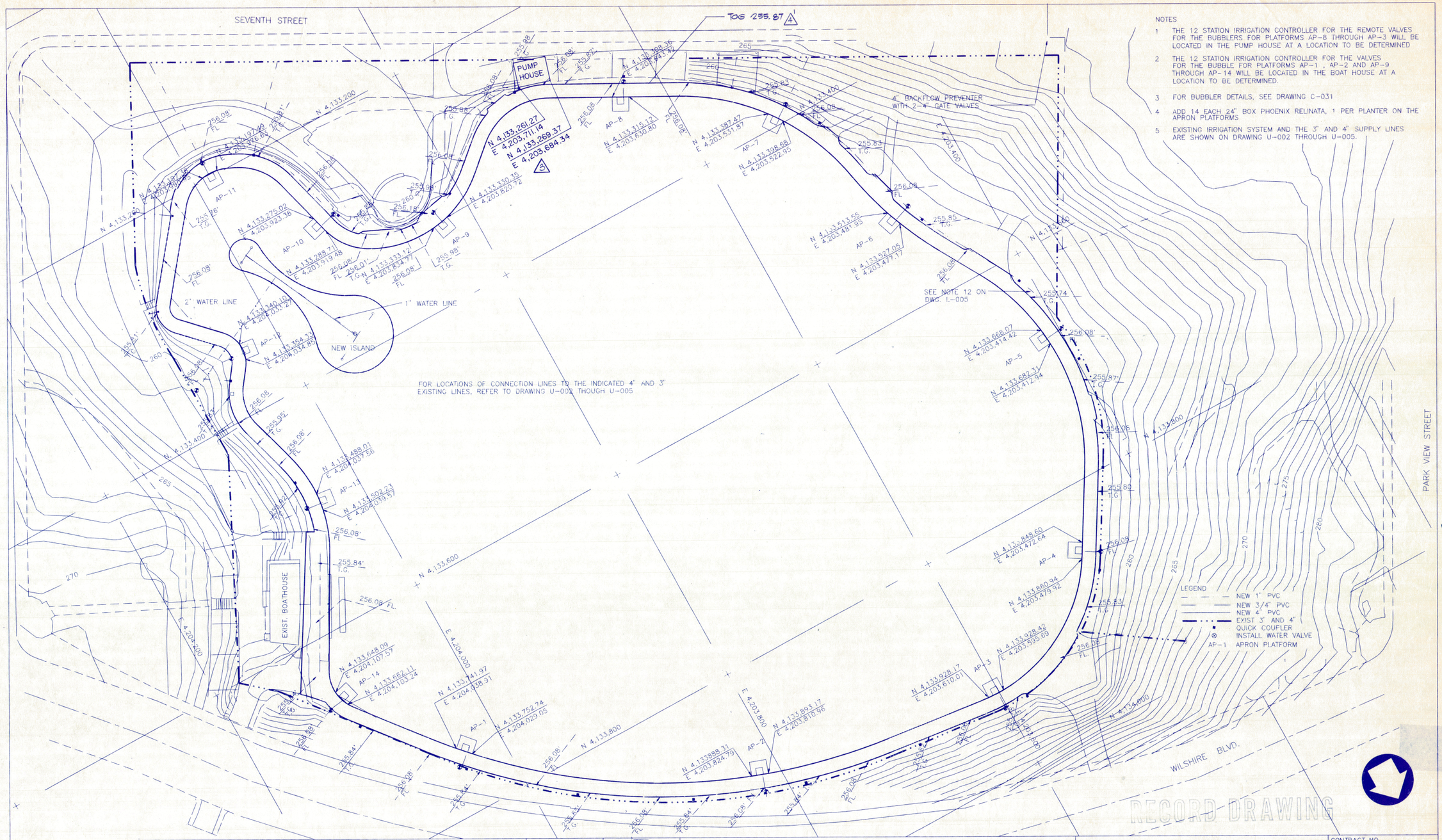

NOTES

1. THE 12 STATION IRRIGATION CONTROLLER FOR THE REMOTE VALVES FOR THE BUBBLERS FOR PLATFORMS AP-8 THROUGH AP-3 WILL BE LOCATED IN THE PUMP HOUSE AT A LOCATION TO BE DETERMINED
2. THE 12 STATION IRRIGATION CONTROLLER FOR THE VALVES FOR THE BUBBLE FOR PLATFORMS AP-1 , AP-2 AND AP-9 THROUGH AP-14 WILL BE LOCATED IN THE BOAT HOUSE AT A LOCATION TO BE DETERMINED.
3. FOR BUBBLER DETAILS, SEE DRAWING C-031
4. ADD 14 EACH 24" BOX PHOENIX RELINATA, 1 PER PLANTER ON THE APRON PLATFORMS
5. EXISTING IRRIGATION SYSTEM AND THE 3" AND 4" SUPPLY LINES ARE SHOWN ON DRAWING U-002 THROUGH U-005.

RECORD DRAWING

REV	DATE	BY	SUB	APP	DESCRIPTION
4	5.12.94	EM	MM	CONC	REVISED PER BASE-BOUND MARKUPS RECEIVED 5-11-94
3	4-29-93	PER	MP		REVISED PER B201-CN-55.01
2	4/20/92	SV	DLC	DWC	REDRAW PER B-201-CN-31.00
1	2/22/91	LT	GG	GG	REDRAW, ADDENDUM 1

THE PREPARATION OF THIS DRAWING HAS BEEN FINANCED IN PART THROUGH A GRANT FROM THE U.S. DEPARTMENT OF TRANSPORTATION, URBAN MASS TRANSPORTATION ADMINISTRATION, UNDER THE URBAN MASS TRANSPORTATION ACT OF 1964, AS AMENDED, AND IN PART BY THE TAXES OF THE CITIZENS OF LOS ANGELES COUNTY AND OF THE STATE OF CALIFORNIA.

DESIGNED BY
DRAWN BY S. Vatterott
CHECKED BY
IN CHARGE
DATE 2/22/91

RICHARD W. CORTEZ No. 11717 CIVIL STATE OF CALIFORNIA

Rail Construction Corporation
A Subsidiary of the Los Angeles County Transportation Commission
METRO RED LINE

SUBMITTED

METRO RAIL TRANSIT CONSULTANTS
DMJM/PBQD/KE/HMA

APPROVED

LA CBD TO NORTH HOLLYWOOD
WILSHIRE/ALVARADO TO WILSHIRE/VERMONT

PUMP HOUSE AND APRON PLAN

CONTRACT NO B 201
DRAWING NO C 202 REV 4
SCALE 1" = 40'
SHEET NO 309

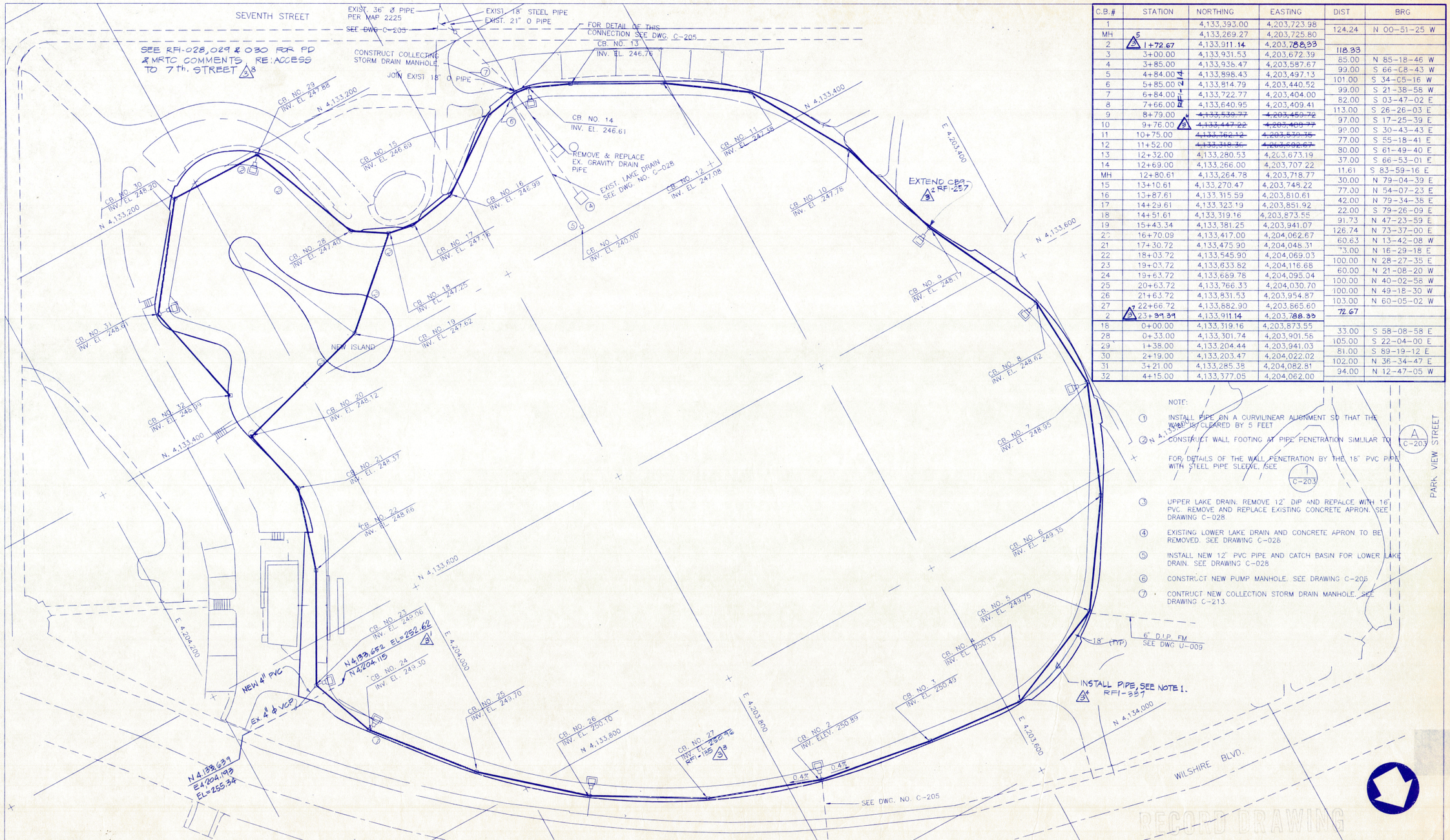

C.B.#	STATION	NORTHING	EASTING	DIST	BRG
1		4,133,393.00	4,203,723.98		
				124.24	N 00-51-25 W
MH	5	4,133,269.27	4,203,725.80		
2	1+72.67	4,133,911.14	4,203,788.33		
				118.33	
3	3+00.00	4,133,931.53	4,203,672.39		
4	3+85.00	4,133,936.47	4,203,587.67	85.00	N 85-18-46 W
5	4+84.00	4,133,898.43	4,203,497.13	99.00	S 66-08-43 W
6	5+85.00	4,133,814.79	4,203,440.52	101.00	S 34-05-16 W
7	6+84.00	4,133,722.77	4,203,404.00	99.00	S 21-38-58 W
8	7+66.00 RFI-214	4,133,640.95	4,203,409.41	82.00	S 03-47-02 E
9	8+79.00	~~4,133,539.77~~	~~4,203,459.72~~	113.00	S 26-26-03 E
10	9+76.00 3	~~4,133,447.22~~	~~4,203,488.77~~	97.00	S 17-25-39 E
11	10+75.00	~~4,133,362.12~~	~~4,203,520.35~~	99.00	S 30-43-43 E
12	11+52.00	~~4,133,318.36~~	~~4,203,582.67~~	77.00	S 55-18-41 E
13	12+32.00	4,133,280.53	4,203,673.19	80.00	S 61-49-40 E
14	12+69.00	4,133,266.00	4,203,707.22	37.00	S 66-53-01 E
MH	12+80.61	4,133,264.78	4,203,718.77	11.61	S 83-59-16 E
15	13+10.61	4,133,270.47	4,203,748.22	30.00	N 79-04-39 E
16	13+87.61	4,133,315.59	4,203,810.61	77.00	N 54-07-23 E
17	14+29.61	4,133,323.19	4,203,851.92	42.00	N 79-34-38 E
18	14+51.61	4,133,319.16	4,203,873.55	22.00	S 79-26-09 E
19	15+43.34	4,133,381.25	4,203,941.07	91.73	N 47-23-59 E
20	16+70.09	4,133,417.00	4,204,062.67	126.74	N 73-37-00 E
21	17+30.72	4,133,475.90	4,204,048.31	60.63	N 13-42-08 W
22	18+03.72	4,133,545.90	4,204,069.03	73.00	N 16-29-18 E
23	19+03.72	4,133,633.82	4,204,116.68	100.00	N 28-27-35 E
24	19+63.72	4,133,689.78	4,204,095.04	60.00	N 21-08-20 W
25	20+63.72	4,133,766.33	4,204,030.70	100.00	N 40-02-58 W
26	21+63.72	4,133,831.53	4,203,954.87	100.00	N 49-18-30 W
27	22+66.72	4,133,882.90	4,203,865.60	103.00	N 60-05-02 W
2	7 23+39.39	4,133,911.14	4,203,788.33	72.67	
28	0+00.00	4,133,319.16	4,203,873.55		
				33.00	S 58-08-58 E
29	1+38.00	4,133,204.44	4,203,941.03	105.00	S 22-04-00 E
30	2+19.00	4,133,203.47	4,204,022.02	81.00	S 89-19-12 E
31	3+21.00	4,133,285.38	4,204,082.81	102.00	N 36-34-47 E
32	4+15.00	4,133,377.05	4,204,062.00	94.00	N 12-47-05 W

NOTE:

1. INSTALL PIPE ON A CURVILINEAR ALIGNMENT SO THAT THE WALL IS CLEARED BY 5 FEET
2. CONSTRUCT WALL FOOTING AT PIPE PENETRATION SIMILAR TO N 4,133,400 FOR DETAILS OF THE WALL PENETRATION BY THE 18" PVC PIPE WITH STEEL PIPE SLEEVE, SEE 1 C-203
3. UPPER LAKE DRAIN: REMOVE 12" DIP AND REPALCE WITH 16" PVC. REMOVE AND REPLACE EXISTING CONCRETE APRON. SEE DRAWING C-028.
4. EXISTING LOWER LAKE DRAIN AND CONCRETE APRON TO BE REMOVED. SEE DRAWING C-028.
5. INSTALL NEW 12" PVC PIPE AND CATCH BASIN FOR LOWER LAKE DRAIN. SEE DRAWING C-028.
6. CONSTRUCT NEW PUMP MANHOLE. SEE DRAWING C-205.
7. CONTRUCT NEW COLLECTION STORM DRAIN MANHOLE. SEE DRAWING C-213.

RECORD DRAWING

THE PREPARATION OF THIS DRAWING HAS BEEN FINANCED IN PART THROUGH A GRANT FROM THE U.S. DEPARTMENT OF TRANSPORTATION, URBAN MASS TRANSPORTATION ADMINISTRATION, UNDER THE URBAN MASS TRANSPORTATION ACT OF 1964, AS AMENDED, AND IN PART BY THE TAXES OF THE CITIZENS OF LOS ANGELES COUNTY AND OF THE STATE OF CALIFORNIA.

REV	DATE	BY	SUB	APP	DESCRIPTION
3	5/2/94	EM			REVISED PER CM'S AS-BUILT MARKUPS RECEIVED 5-11-94
2	4/20/92	SV			REDRAW FEE 8-001-CN-3100
1	2/22/91	LT	GG	GG	REDRAW, ADDENDUM 1

DESIGNED BY
DRAWN BY E. Valdefession
CHECKED BY
IN CHARGE
DATE 2/22/91

REGISTERED PROFESSIONAL ENGINEER DONALD L. LOGAN No. 11717 CIVIL STATE OF CALIFORNIA

LACTC a Subsidiary of the Los Angeles County Transportation Commission

Rail Construction Corporation
METRO RED LINE

SUBMITTED Donald L. Logan

METRO RAIL TRANSIT CONSULTANTS
DMJM/PBQD/KE/HMA

APPROVED

LA CBD TO NORTH HOLLYWOOD
WILSHIRE/ALVARADO TO WILSHIRE/VERMONT

LAKE PERIMETER AND STORM DRAIN LAYOUT

CONTRACT NO B 201
DRAWING NO C 204 REV 3
SCALE 1" = 40'
SHEET NO 311



REV	DATE	BY	SUB	APP	DESCRIPTION
2	5/12/94	EM	DDA	GMC	NO REVISIONS INDICATED ON CM'S AS-BUILT MARKUPS RECEIVED 5-11-94
1	2/22/91	[illegible]	[illegible]	[illegible]	ADDENDUM #1

THE PREPARATION OF THIS DRAWING HAS BEEN FINANCED IN PART THROUGH A GRANT FROM THE U.S. DEPARTMENT OF TRANSPORTATION, URBAN MASS TRANSPORTATION ADMINISTRATION, UNDER THE URBAN MASS TRANSPORTATION ACT OF 1964, AS AMENDED, AND IN PART BY THE TAXES OF THE CITIZENS OF LOS ANGELES COUNTY AND OF THE STATE OF CALIFORNIA.

DESIGNED BY B Sett
DRAWN BY L Tolbert
CHECKED BY [signature]
IN CHARGE [signature]
DATE 9.4.90

REGISTERED PROFESSIONAL ENGINEER GENE T. GINTHER No. 40429 EXP 3-31-91 CIVIL STATE OF CALIFORNIA

Rail Construction Corporation
METRO RED LINE
a Subsidiary of the Los Angeles County Transportation Commission

SUBMITTED [signature]

METRO RAIL TRANSIT CONSULTANTS
DIA/JM/PBQD/KE/HWA
APPROVED [signature]

LA CBD TO NORTH HOLLYWOOD
WILSHIRE/ALVARADO TO WILSHIRE/VERMONT

LAKE DEMOLITION DRAWING

CONTRACT NO B 201
DRAWING NO C-200
REV 2
SCALE 1" = 40'
SHEET NO 307

6-4-93

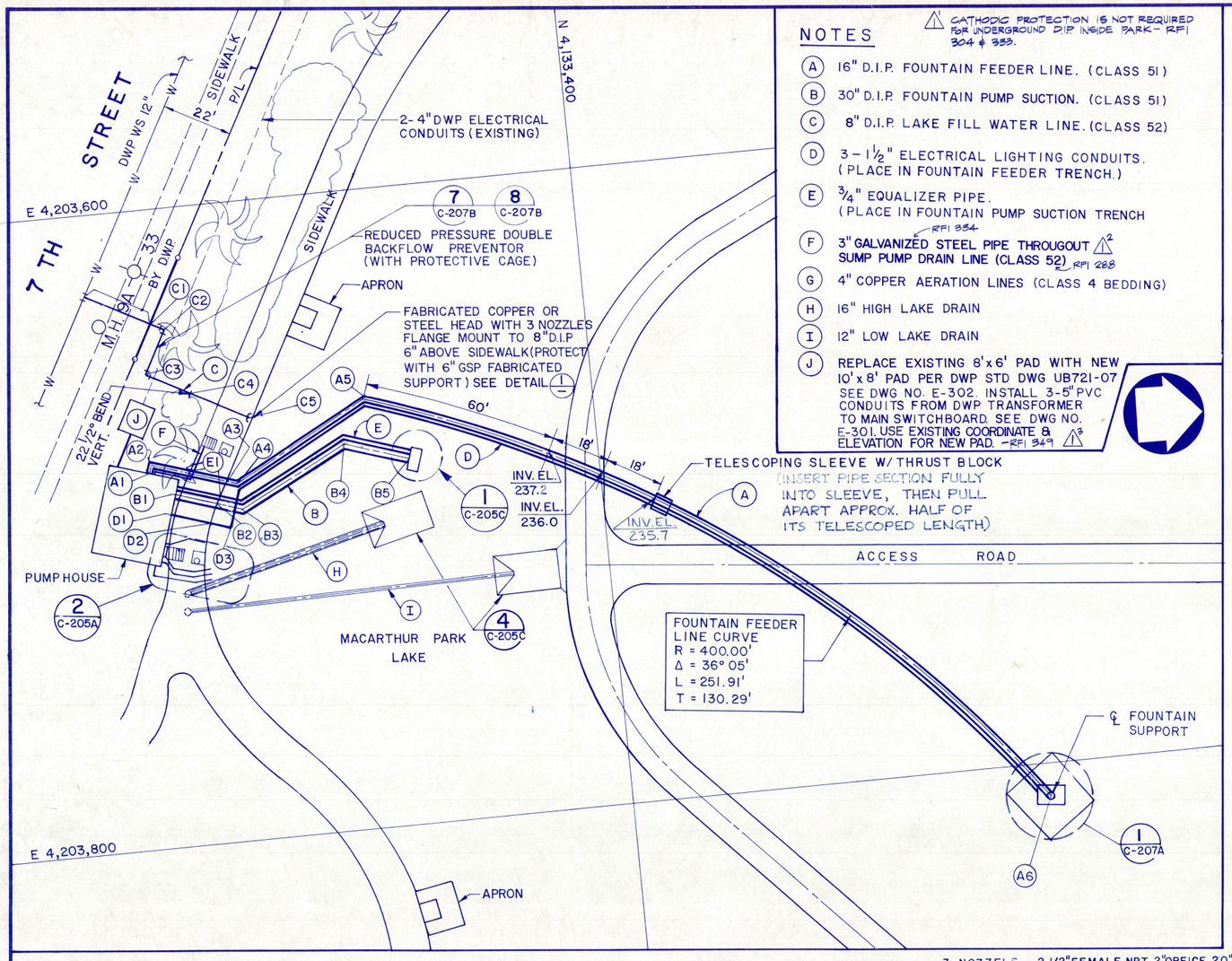

NOTES

⚠ CATHODIC PROTECTION IS NOT REQUIRED FOR UNDERGROUND D.I.P. INSIDE PARK - RFI 304 & 353.

(A) 16" D.I.P. FOUNTAIN FEEDER LINE. (CLASS 51)

(B) 30" D.I.P. FOUNTAIN PUMP SUCTION. (CLASS 51)

(C) 8" D.I.P. LAKE FILL WATER LINE. (CLASS 52)

(D) 3 - 1½" ELECTRICAL LIGHTING CONDUITS. (PLACE IN FOUNTAIN FEEDER TRENCH.)

(E) ¾" EQUALIZER PIPE. (PLACE IN FOUNTAIN PUMP SUCTION TRENCH

(F) 3" GALVANIZED STEEL PIPE THROUGOUT ⚠2 SUMP PUMP DRAIN LINE (CLASS 52) RFI 354 RFI 288

(G) 4" COPPER AERATION LINES (CLASS 4 BEDDING)

(H) 16" HIGH LAKE DRAIN

(I) 12" LOW LAKE DRAIN

(J) REPLACE EXISTING 8'x6' PAD WITH NEW 10'x8' PAD PER DWP STD DWG UB721-07 SEE DWG NO. E-302. INSTALL 3-5" PVC CONDUITS FROM DWP TRANSFORMER TO MAIN SWITCHBOARD. SEE DWG NO. E-301. USE EXISTING COORDINATE & ELEVATION FOR NEW PAD. -RFI 349 ⚠3

NO.	COORDINATES		INV. ELEV.
A1	N 4,133,259.80	E 4,203,681.44	257.21
A2	N 4,133,260.67	E 4,203,678.57	257.21
A2			248.50
✳ A3	N 4,133,284.55	E 4,203,685.79	248.50
A4	N 4,133,287.95	E 4,203,686.82	248.50
A5	N 4,133,328.72	E 4,203,665.52	244.00
A6	N 4,133,530.00	E 4,203,810.00	237.66
B1	N 4,133,268.02	E 4,203,688.81	248.25
✳ B2	N 4,133,280.88	E 4,203,692.69	248.25
B3	N 4,133,289.08	E 4,203,695.17	248.25
B4	N 4,133,320.10	E 4,203,678.97	243.00
B5	N 4,133,340.20	E 4,203,685.05	243.00
C1	N 4,133,265.39	E 4,203,634.34	258.50
C2	N 4,133,270.00	E 4,203,636.84	258.00
C3	N 4,133,262.85	E 4,203,650.03	258.00
C4	N 4,133,294.50	E 4,203,667.18	251.75
C5	N 4,133,304.17	E 4,203,672.42	251.75
✳ G1	N 4,133,276.36	E 4,203,704.49	253.33
✳ G2	N 4,133,276.36	E 4,203,704.49	254.33
✳ G3	N 4,133,275.04	E 4,203,710.65	253.33
✳ G4	N 4,133,275.04	E 4,203,710.65	254.33
✳ G5	N 4,133,274.82	E 4,203,712.14	253.33
✳ G6	N 4,133,274.82	E 4,203,712.14	254.33
✳ G7	N 4,133,274.64	E 4,203,713.63	253.33
✳ G8	N 4,133,274.64	E 4,203,713.63	254.33
✳ E1	N 4,133,282.18	E 4,203,690.22	249.50
D1	N 4,133,265.90	E 4,203,695.82	254.25
✳ D2	N 4,133,277.95	E 4,203,699.47	252.00
D3	N 4,133,283.61	E 4,203,701.18	252.00

✳ LOCATION AND ELEVATION AT FACE OF RETAINING WALL

BEARING	DISTANCE
N 73° 10' 15" W	3.00'
(VERTICAL LINE)	8.38'
N 16° 49' 45" E	24.95'
N 16° 49' 45" E	3.55'
N 27° 35' 00" W.	46.00'
(CURVE)	251.91'
N 16° 49' 45" E	13.43'
N 16° 49' 45" E	8.57'
N 27° 35' 00" W	35.00'
N 16° 49' 45" E	21.00'
N 28° 27' 49" E	5.24'
S 61° 32' 11" E	15.00'
N 28° 27' 49" E	15.00'
N 28° 27' 49" E	19.00'
N 16° 49' 45" E	12.58'
N 16° 49' 45" E	5.92'

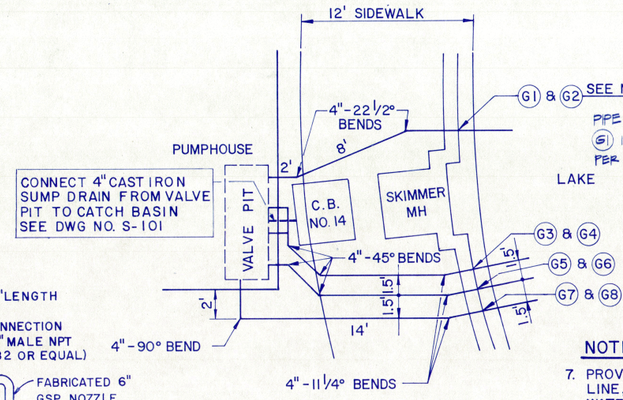

DETAIL 2 C-205A
SCALE 1" = 5'

NOTES:

1. INSTALL 16" D.I.P. FOUNTAIN FEEDER LINE (A) IN TRENCH WITH SAND BEDDING AND MINIMUM 2.5' OF COVER. PROVIDE 20" DIA. PIPE SLEEVE THRU RETAINING WALL.
2. INSTALL 30" D.I.P. FOUNTAIN PUMP SUCTION/SUMP EQUALIZER (B) IN TRENCH WITH SAND BEDDING AND MIN. 2.5' OF COVER. PROVIDE 36" DIA. PIPE SLEEVE THRU RETAINING WALL.
3. INSTALL 8" LAKE FILL WATER LINE (C) IN TRENCH WITH SAND BEDDING AND MIN. 2.5' OF COVER. PROVIDE 12" DIA. PIPE SLEEVE THRU RETAINING WALL.
4. INSTALL 3 - 1½" ELECTRICAL LIGHTING CONDUITS (D) IN TRENCH COMMON WITH FOUNTAIN FEEDER LINE FROM LOCATION (A4) TO LOCATION (A6) PROVIDE 3-3" DIA. PIPE SLEEVES THRU RETAINING WALL
5. INSTALL 3/4" EQUALIZER PIPE (E) IN TRENCH COMMON WITH FOUNTAIN PUMP SECTION. PROVIDE 3" DIA. PIPE SLEEVE THRU RETAINING WALL.
6. ROUTE 4" COPPER AERATION LINES (G) AS SHOWN. PROVIDE 6" DIA PIPE SLEEVE THRU RETAINING WALL AT LOCATIONS SHOWN.

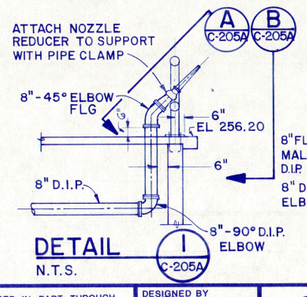

DETAIL 1 C-205A
N.T.S.

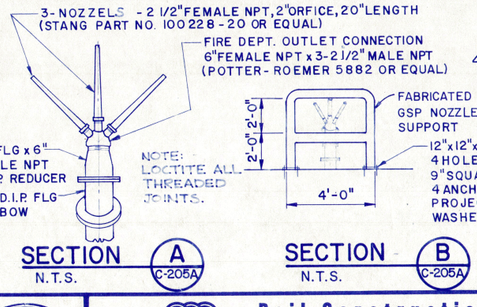

SECTION A C-205A
N.T.S.

SECTION B C-205A
N.T.S.

NOTES (CONTINUED):

7. PROVIDE THRUST BLOCKS ON FOUNTAIN FEEDER LINE, FOUNTAIN PUMP SUCTION AND LAKE FILL WATER LINE AT ELBOWS AND TEES BELOW SURFACE IN ACCORDANCE WITH DWG NO. U-025 AND SPEC. SECTION 2600.3.7.
8. INSTALL CAPPED 4" DIA. PIPE IN SLEEVE AT LOCATION (G2). RFI 353 ⚠5

RECORD DRAWING

REV	DATE	BY	SUB	APP	DESCRIPTION
1	5.12.94	EM			REVISION NO 3 AS-BUILT MARKUPS RECEIVED 5-11-94
0	4.29.93	PER	NP		NEW SHEET PER B201-CN-55.01

THE PREPARATION OF THIS DRAWING HAS BEEN FINANCED IN PART THROUGH A GRANT FROM THE U.S. DEPARTMENT OF TRANSPORTATION, URBAN MASS TRANSPORTATION ADMINISTRATION, UNDER THE URBAN MASS TRANSPORTATION ACT OF 1964, AS AMENDED, AND IN PART BY THE TAXES OF THE CITIZENS OF LOS ANGELES COUNTY AND OF THE STATE OF CALIFORNIA.

DESIGNED BY
DRAWN BY
CHECKED BY
IN CHARGE
DATE 4-29-93

REGISTERED PROFESSIONAL ENGINEER DONALD W. LOA No. 11717 12-31-95 CIVIL STATE OF CALIFORNIA

LACTC A Subsidiary of the Los Angeles County Transportation Commission

Rail Construction Corporation
METRO RED LINE

BMM ENGINEERING MANAGEMENT CONSULTANT an association of Parsons Brinckerhoff Quade & Douglas, Inc. Daniel, Mann, Johnson & Mendenhall ICF-Kaiser Engineers (Calif.) Corp. Escudero-Fribourg Architects Jenkins Gales Martinez, Inc. The Nettleship Group, Inc.

SUBMITTED
APPROVED

LA CBD TO NORTH HOLLYWOOD
WILSHIRE/ALVARADO TO WILSHIRE/ VERMONT

7TH STREET TO LAKE - LAYOUT

CONTRACT NO B201
DRAWING NO C-205A REV 1
SCALE 1" = 20'
SHEET NO 312A

150194

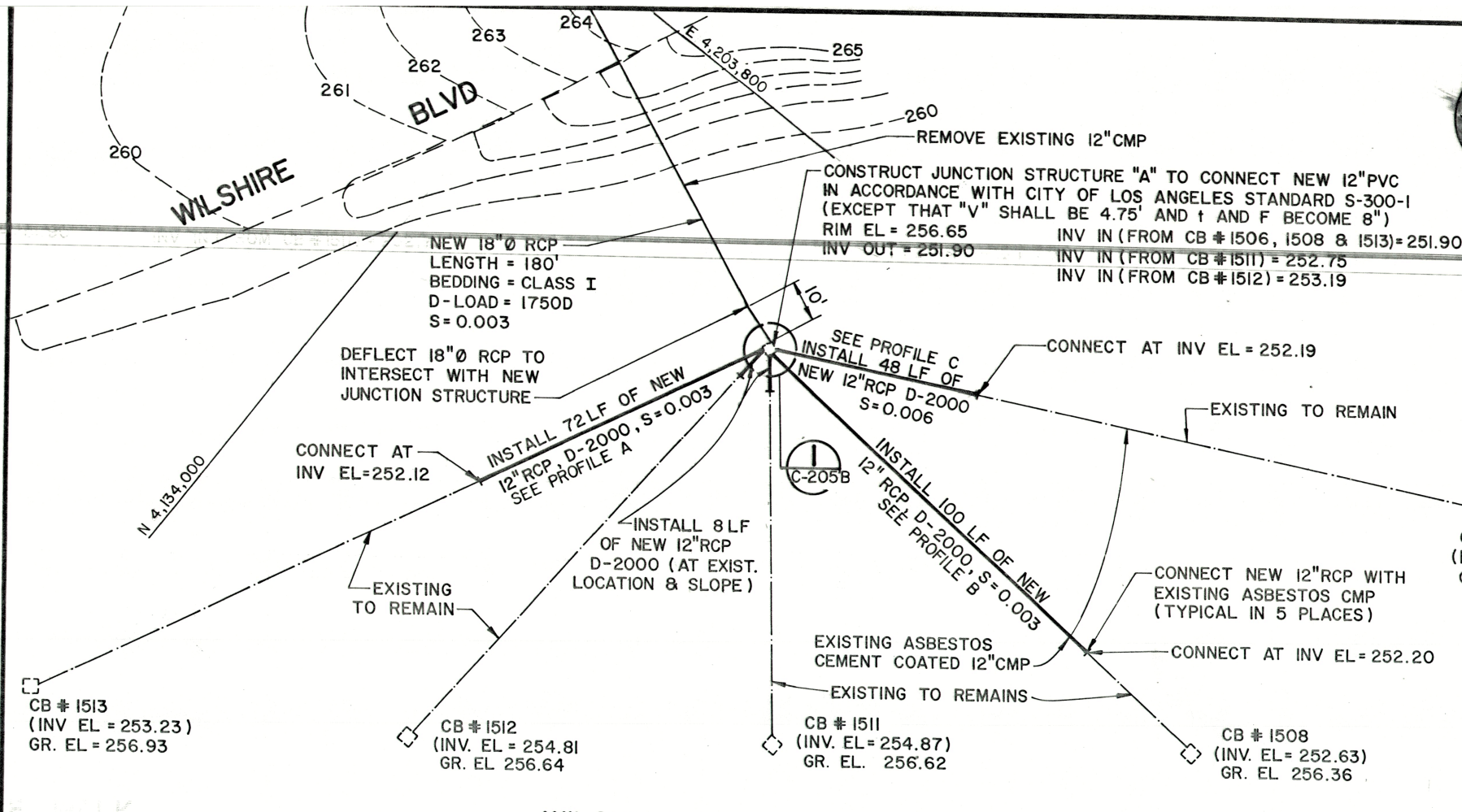

WILSHIRE BLVD TO LAKE WALK

SCALE 1" = 20'

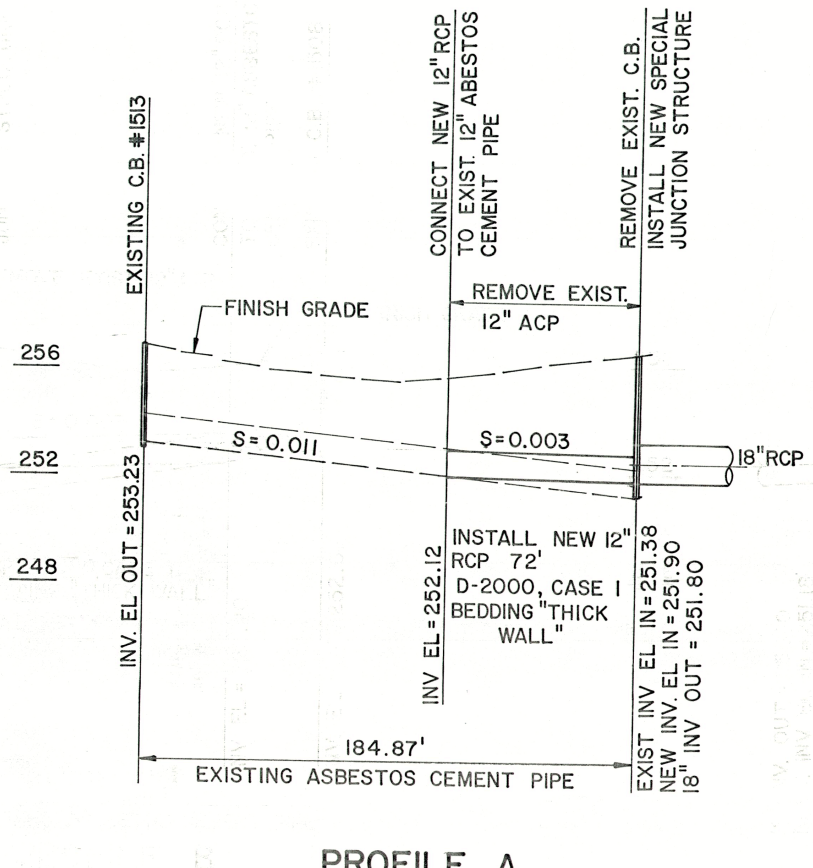

PROFILE A

SCALE: HORIZ. 1" = 40' VERT. 1" = 4'

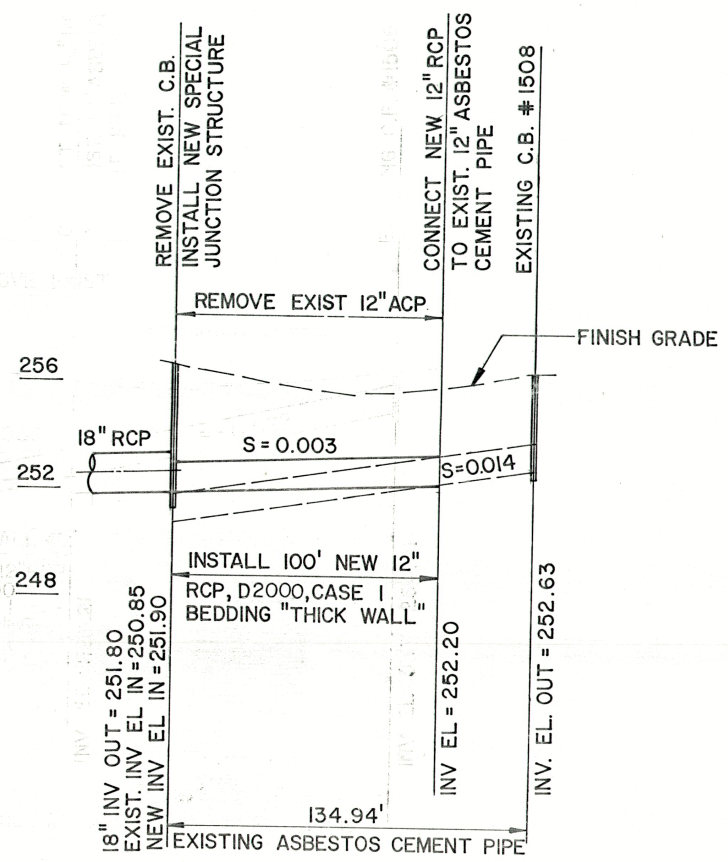

PROFILE B

SCALE: HORIZ 1" = 40' VERT 1" = 4'

REV	DATE	BY	SUB	APP	DESCRIPTION
1	5/12/94	EM	SDA	Gme	NO REVISIONS INDICATED ON CM'S AS-BUILT MARKUPS RECEIVED 5-11-94
0	4-29-93	PER	NP	Gme	NEW SHEET PER B201-CN-58

THE PREPARATION OF THIS DRAWING HAS BEEN FINANCED IN PART THROUGH A GRANT FROM THE U.S. DEPARTMENT OF TRANSPORTATION, FEDERAL TRANSPORTATION ADMINISTRATION, UNDER THE URBAN MASS TRANSPORTATION ACT OF 1964, AS AMENDED, AND IN PART BY THE TAXES OF THE CITIZENS OF LOS ANGELES COUNTY AND OF THE STATE OF CALIFORNIA.

DESIGNED BY P Rota
DRAWN BY Bonacavinta
CHECKED BY Neil Seibert
IN CHARGE
DATE 4-29-93

REGISTERED PROFESSIONAL ENGINEER
DONALD W LOGAN
No. 11717
Exp 12-31-96
CIVIL
STATE OF CALIFORNIA

a Subsidiary of the Los Angeles County Transportation Comm

ENGINEERING MA
an association of:
Parsons Brinckerh
Daniel, Mann, Jo
ICF-Kaiser Engin
Escudero-Fribou
Jenkins Gales M
The Nettleship G

154835

155893

6-4-93

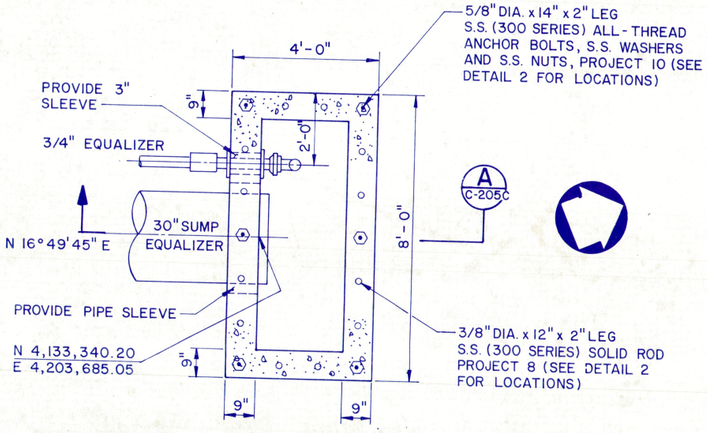

SUCTION SUMP PLAN 1 C-205C

SCALE 1/2" = 1'-0"

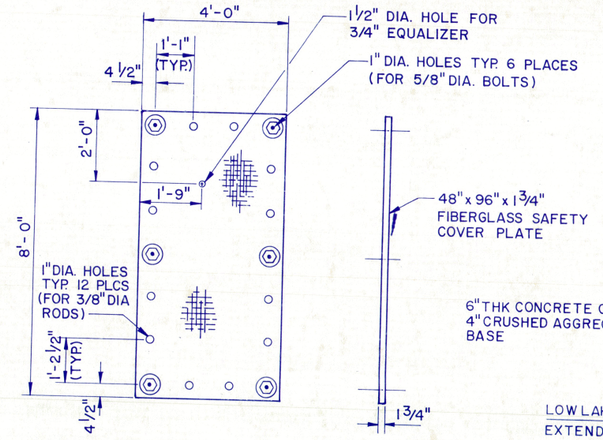

SAFETY COVER PLATE PLAN 2 C-205C

SCALE 1/2" = 1'-0"

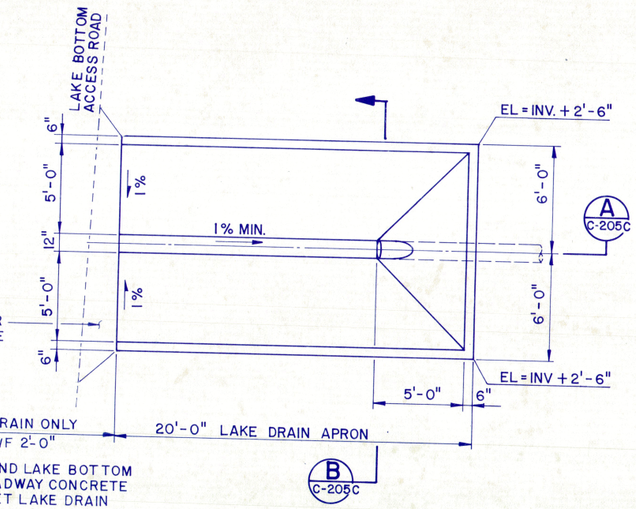

NOTE: EXTEND LAKE BOTTOM ACCESS ROADWAY CONCRETE EDGE TO MEET LAKE DRAIN APRON.

LAKE DRAIN APRON PLAN 4 C-205C

SCALE 1/4" = 1'-0"

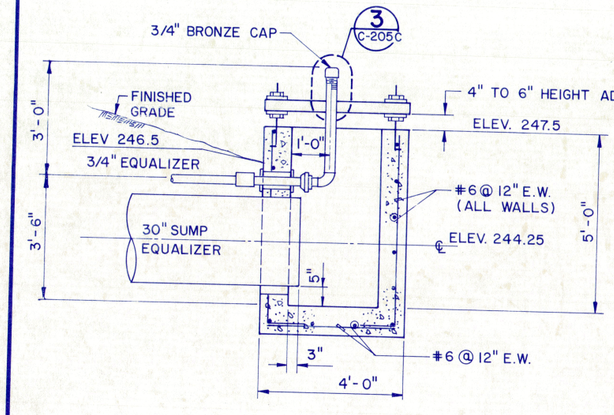

SECTION A C-205C

SCALE 1/2" = 1'-0"

SUBSTITUTE "TYPE K" COPPER PIPE IN LIEU OF RED BRASS PIPE PER RFI-353 ⚠

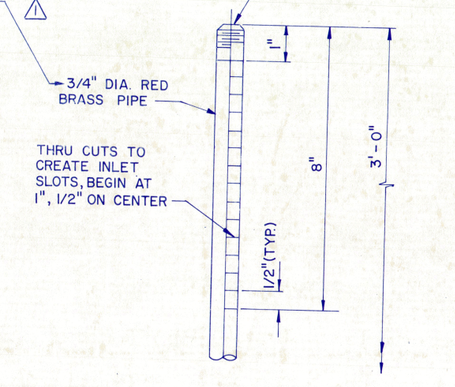

DETAIL 3 C-205C

NOT TO SCALE

HIGH LAKE DRAIN, MATCH ASPHALTIC CONCRETE PAVEMENT

LOW LAKE DRAIN MATCH LAKE BOTTOM ACCESS ROADWAY

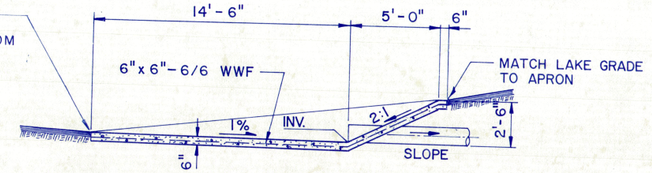

SECTION A C-205C

SCALE 1/4" = 1'-0"

MATCH ASPHALTIC CONCRETE PAVEMENT LAKE GRADE

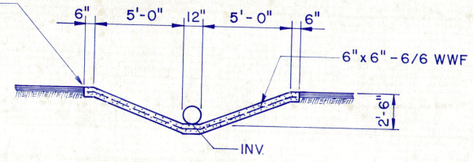

SECTION B C-205C

SCALE 1/4" = 1'-0"

RECORD DRAWING

REV	DATE	BY	SUB	APP	DESCRIPTION
1	5.12.94	EM	TDA	GMC	REVISED PER DWG AS-BUILT MARKUPS RECEIVED 5-11-94
2	4.29.99	PER	NP		NEW SHEET PER B201-CN-55.01

THE PREPARATION OF THIS DRAWING HAS BEEN FINANCED IN PART THROUGH A GRANT FROM THE U.S. DEPARTMENT OF TRANSPORTATION, FEDERAL TRANSPORTATION ADMINISTRATION, UNDER THE URBAN MASS TRANSPORTATION ACT OF 1964, AS AMENDED, AND IN PART BY THE TAXES OF THE CITIZENS OF LOS ANGELES COUNTY AND OF THE STATE OF CALIFORNIA.

DESIGNED BY
DRAWN BY
CHECKED BY
IN CHARGE
DATE 4-29-93

REGISTERED PROFESSIONAL ENGINEER — DONALD W. LOGAN — No. 11717 — EXP. 12-31-96 — CIVIL — STATE OF CALIFORNIA

Rail Construction Corporation
A Subsidiary of the Los Angeles County Transportation Commission
METRO RED LINE

ENGINEERING MANAGEMENT CONSULTANT
an association of
Parsons Brinckerhoff Quade & Douglas, Inc.
Dand. Mann, Johnson & Mendenhall
ICF-Kaiser Engineers (Calif.) Corp.
Escudero-Froburg Architects
Jenkins Gales Martinez, Inc.
The Nerteship Group, Inc.

SUBMITTED
APPROVED

LA CBD TO NORTH HOLLYWOOD
WILSHIRE/ALVARADO TO WILSHIRE/VERMONT

7TH STREET TO LAKE
SUCTION SUMP & LAKE DRAIN APRON DETAILS

CONTRACT NO B201
DRAWING NO C-205C REV 1
SCALE AS NOTED
SHEET NO

154252

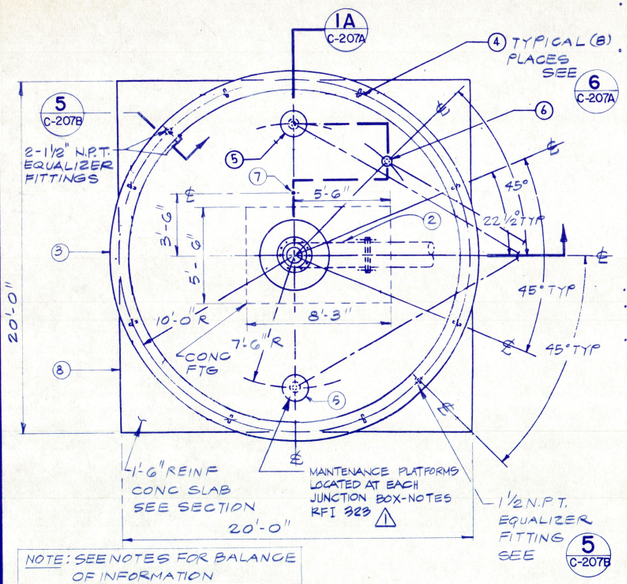

NOTE: SEE NOTES FOR BALANCE OF INFORMATION

FOUNTAIN FOUNDATION PLAN
1/4"=1'-0" — 1 C-207A

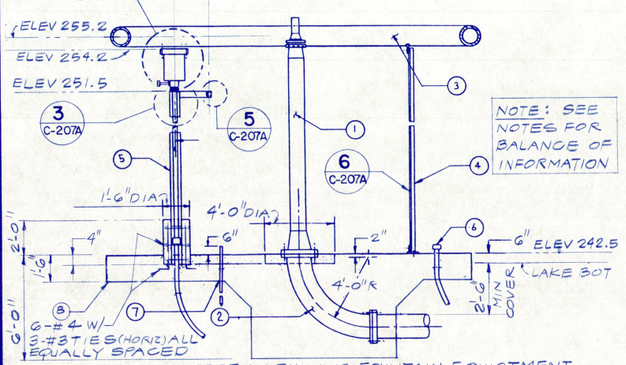

SECTION SHOWING FOUNTAIN EQUIPTMENT

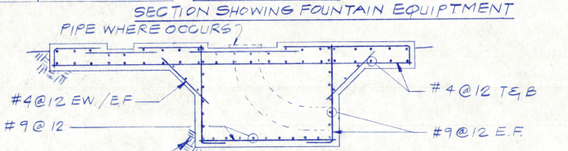

SECTION SHOWING REINF

SECTION
1/4"=1'-0" — 1A C-207A

- PEM J-6, 1½" N.P.T. FITTED W/(14/12) J-14 CORD SEALS - POT W/RE-ENTR RE-ENTRABLE 3-M N° 2114 SEALING
- 3/8" DIA x 3" LG S.S. ALL-THREAD MATCHING CLEARANCE HOLES IN COVER W/WASHERS & WINGNUTS TYP (4) PLACES
- WELD
- SILVER SOLDER
- 4" DIA x ¼" THK BRASS BAR STOCK W/CTRD 2" DIA CLR HOLE
- 1½" NOM. PIPE x 3'-0" LG
- 1'-6" DIA x ¼" THK 304 S.S. PLATE
- ⅜ S.S. LOCK BOLT W/2" HANDLE
- WELD
- 3/8"-16 ALL-THREAD S.S. ROD
- ¾" DIA x 1½" LG S.S. ROD DRILL & TAP ⅜"-16
- 2½" DIA x 2½" THK BRASS BAR - BRAZE TO PIPE UNDERSIDE ONLY - ADD GRNDG LUG
- 1½" DIA x 3'-0" LG RED BRASS PIPE, CITY OF L.A. APPROVED FOR ELEC WORK

24" DIA x 3" HIGH x 0.7" THK 304 STN STEEL SHT COVER FULL BEAD ROLL OUTSIDE

PROVIDE FOR 1" TO 2" ADJUSTMENT

1'-6" DIA x 2'-0" HIGH x 0.7" THK - 304 S.S. SHT HOUSING, FULL BEAD ROLL INSIDE

3/8" DIA x 3" I.D. O'RING EPDM

⅜" S.S. DRAIN PLUG

ELEV 251.75

0.7" TYP

4½" DIA x 4½" LG 304 SS. RND BAR STOCK REAM TO SLIP FIT 1⅞" O.D. PIPE - SEE 4 C-207A

OPP HD

DETAIL
(ELECTRICAL ASSEMBLY J-BOX) NO SCALE — 2 C-207A
TYPICAL (2) PLACES

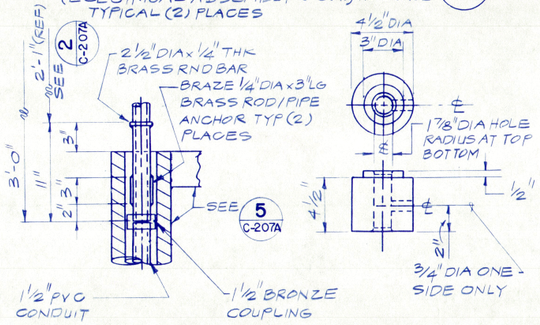

NIPPLE ANCHOR

DETAIL
1½" = 1'-0" — 3 C-207A

HOUSING SLEEVE

DETAIL
NO SCALE — 4 C-207A

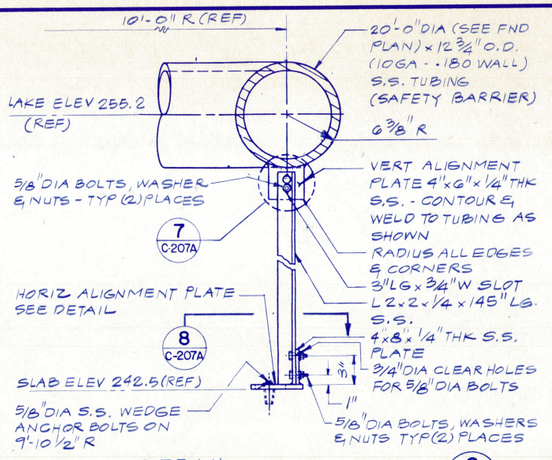

DETAIL
(SUPPORT FOR SAFETY BARRIER) NO SCALE — 6 C-207A
TYPICAL (8) PLACES

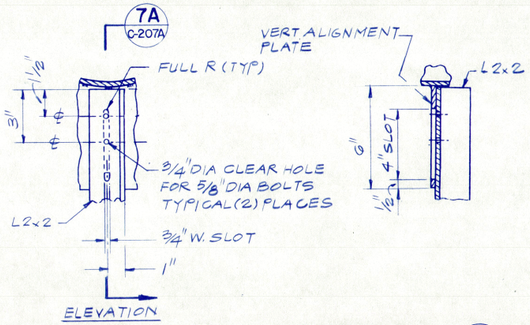

ELEVATION

DETAIL
NO SCALE — 7 C-207A

SECTION
NO SCALE — 7A C-207A

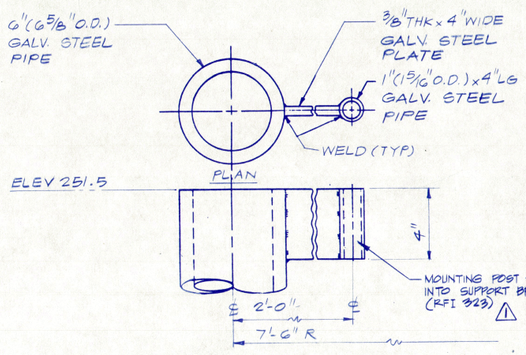

PARTIAL ELEVATION

DETAIL
(SERVICE SUPPORT BRACKET) NO SCALE — 5 C-207A
TYPICAL (2) PLACES

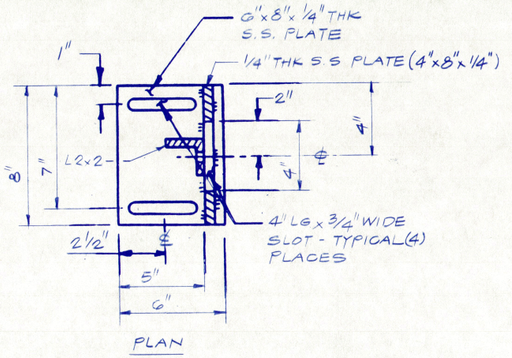

PLAN

DETAIL
(HORIZONTAL ALIGNMENT PLATE) 3"=1'-0" — 8 C-207A

NOTES

1. FOUNTAIN NOZZLE AND RISER ASSEMBLY
   - A) 100 MM X 8 INCH MACHINED BRONZE FLANGED NOZZLE MODIFIED TO 75MM ORIFICE WITH HARDENED ORIFICE SLEEVE. PEM MODEL 888 OR APPROVED EQUAL
   - B) 13.5 INCH Ø X 1 INCH THICK HIGH DENSITY (50 DURO) NEOPRENE ALIGNMENT COMPRESSION GASKET (8" FLANGE).
   - C) CUSTOM FABRICATED STEEL NOZZLE RISER TO BE SINGLE UNIT CONSTRUCTION W/142" FLANGE-TO-FLANGE DIMENSION. SHALL CONSIST OF (1) 16"Ø CLASS 150 WELDING NECK STEEL FLANGE W/FLAT FACE, (1) 16" X 10" STANDARD CLASS CONCENTRIC STEEL REDUCER, (1) 10"Ø X 112" LENGTH STANDARD CLASS STEEL PIPE, (1) 10" X 8" STANDARD CLASS CONCENTRIC STEEL REDUCER, (1) 8"Ø CLASS 150 WELDING NECK STEEL FLANGE W/FLAT FACE.
   - D) CONSUMABLE INSERT RING WITH INTEGRAL POSITION PINS SHALL BE USED AT ALL WELDED JOINTS. INTERIOR/EXTERIOR SURFACES SHALL BE SAND BLASTED PRIOR TO RECEIVING DOUBLE-DIP HOT GALVANIZED COATING. EACH APPLICATION SHALL BE BRUSHED FREE OF EXCESSIVE BUILD-UP. PROVIDE A MINIMUM COAT COVERAGE OF 2.0 OZ./SQ. FT.
2. LONG SWEEP ELBOW

   CUSTOM FABRICATED STEEL LONG SWEEP ELBOW TO BE SINGLE UNIT CONSTRUCTION W/(1) 16"Ø X 48" (THREE RADIUS) STEEL 90° ELBOW, (2) 16"Ø CLASS 150 WELDING NECK STEEL FLANGE W/FLAT FACE.
3. 20" FOOT DIAMETER STAINLESS STEEL SAFETY BARRIER

   CUSTOM FABRICATED 12"Ø - 10 GAUGE (.180" WALL THICKNESS) 304 SERIES STAINLESS STEEL TUBES SHALL BE FORMED AND WELDED INTO A SINGLE FLANGED UNIT 20'0" (CENTERLINE) Ø RING. FINISHED ASSEMBLY SHALL BE UNIFORMLY CONCENTRIC AND FREE OF CREASES AND WRINKLES AND FINISHED TO WITHIN A .5" TOLERANCE (MIN. Ø 239.75", MAX. Ø 240.25"). ASSEMBLY SHALL BE UNIFORMLY FLAT AND FINISHED TO WITHIN A .25" TOLERANCE.
4. STAINLESS STEEL SUPPORT LEGS - 2" X 2" X ¼" ANGLE

   EIGHT EQUALLY SPACED STAINLESS STEEL (300 SERIES) LEG SUPPORT ASSEMBLIES SHALL BE PROVIDED. SECURE WITH RED HEAD'S - 5/8" Ø S.S. WEDGE ANCHOR BOLTS MINIMUM 2-½" EMBEDMENT IN CONCRETE. LOCATE ANCHORS ON 118.5" RADIUS.
5. JUNCTION BOX ASSEMBLY (NEMA TYPE 6)
6. SPARE CONDUIT (WATER TIGHT CAPPED IF NOT USED)
7. GROUNDING ROD (SEE ELEC SPECS)
8. 20' X 20' CONCRETE FOUNDATION PAD WITH REINFORCING

CONSTRUCTION NOTES:

1. NOZZLE RISER AND ELBOW SHALL BE INSTALLED TO BE VERTICALLY PLUMB WITH A MAXIMUM ERROR OF 15 ARC MINUTES
2. ALL WELDS AND FILLS SHALL BE OF COMPATIBLE MATERIALS AND SHALL BE ARGON PURGED OF IMPURITIES. WELDS SHALL BE GROUND AND DRESSED TO A UNIFORM FINISH.
3. STAINLESS STEEL TUBING SHALL BE FITTED WITH TWO 1-½" S.S. EQUALIZER FITTINGS.
4. STAINLESS STEEL TUBING AND APPURTENANCES SHALL BE SAND-BLASTED TO A UNIFORM MATTE FINISH.
5. ALL FASTENERS ABOVE PAD SHALL BE STAINLESS STEEL. BOLTS LOCATED AT 8" ALIGNMENT GASKET FLANGE SHALL BE ALL-THREAD NON-STANDARD LENGTH.

RECORD DRAWING

REV	DATE	BY	SUB	APP	DESCRIPTION
1	5.12.94	EM	JDA	GMC	REVISED PER CM'S AS-BUILT MARKUPS RECEIVED 5-11-94
0	4.29.93	PER	NP		NEW SHEET PER B201-CN-55.01

THE PREPARATION OF THIS DRAWING HAS BEEN FINANCED IN PART THROUGH A GRANT FROM THE U.S. DEPARTMENT OF TRANSPORTATION, URBAN MASS TRANSPORTATION ADMINISTRATION, UNDER THE URBAN MASS TRANSPORTATION ACT OF 1964, AS AMENDED, AND IN PART BY THE TAXES OF THE CITIZENS OF LOS ANGELES COUNTY AND OF THE STATE OF CALIFORNIA.

DESIGNED BY
DRAWN BY
CHECKED BY
IN CHARGE
DATE 4-29-93

REGISTERED PROFESSIONAL ENGINEER DONALD W. LOGAN No. 11717 Exp 12-31-94 CIVIL STATE OF CALIFORNIA

Rail Construction Corporation
A Subsidiary of the Los Angeles County Transportation Commission
METRO RED LINE

ENGINEERING MANAGEMENT CONSULTANT
an association of
Parsons Brinckerhoff Quade & Douglas, Inc.
Daniel, Mann, Johnson & Mendenhall
ICF-Kaiser Engineers (Calif.) Corp.
Escudero-Fribourg Architects
Jenkins Gales Martinez, Inc.
The Nethercutt Group, Inc.

SUBMITTED Donald W. Logan
APPROVED

L A CBD TO NORTH HOLLYWOOD
WILSHIRE/ALVARADO TO WILSHIRE/VERMONT

FOUNTAIN PLAN, SECTIONS AND DETAILS

CONTRACT NO B-201
DRAWING NO C-207A REV 1
SCALE AS NOTED
SHEET NO 313A

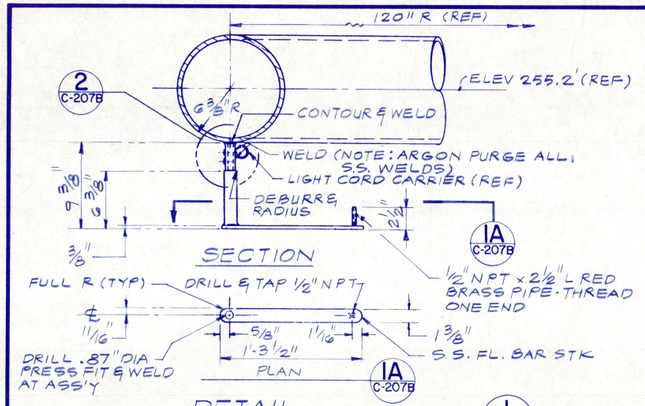

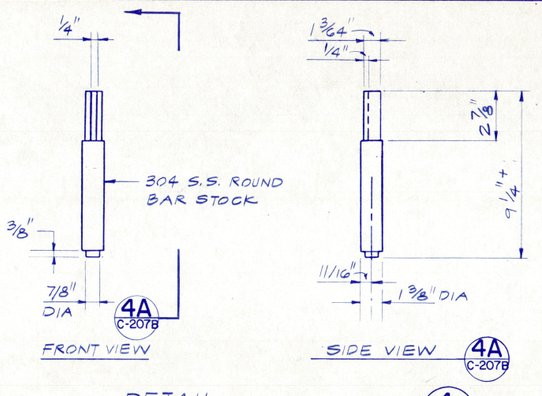

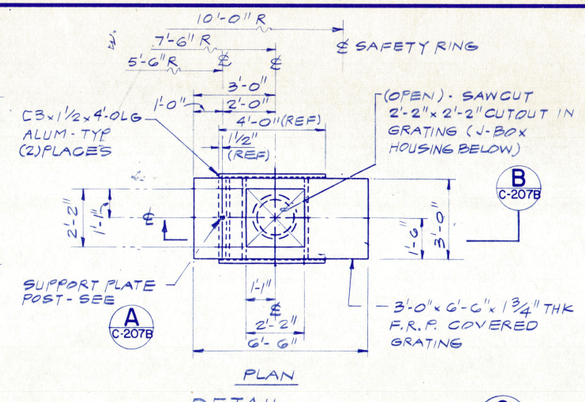

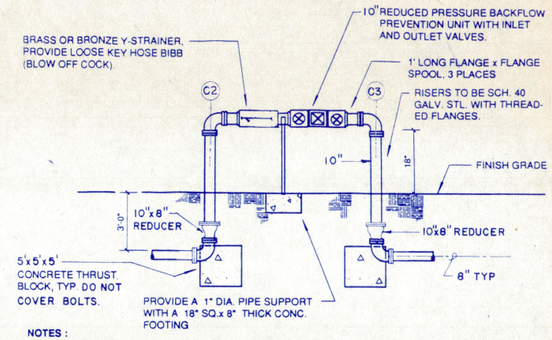

NOTES:

1. BACKFLOW AND REGULATING EQUIPMENT SHALL BE FLANGE MOUNTED.
2. PAINT BACKFLOW DEVICE, PRESSURE REGULATOR AND EXPOSED PIPING WITH TWO COATS OF FOREST GREEN ENAMEL PAINT. MASK ALL IDENTIFICATION TAGS.
3. THE BACKFLOW PREVENTER SHALL BE TESTED BY A CERTIFIED TESTER WITH THE RESULTS SENT TO THE L.A. COUNTY HEALTH DEPT., ON THE "BACKFLOW PREVENTION DEVICE TESTING REPORT". PROVIDE A DUPLICATE COPY FOR THE POLLUTION CONTROL SECTION OF THE DEPARTMENT OF WATER AND POWER, AND A COPY TO THE PROJECT MANAGER AT THE OPERATIONAL FINAL.
4. ALL FLANGE CONNECTIONS SHALL BE MADE WITH DUCTILE IRON BOLTS.
5. 10" REDUCED PRESSURE BACKFLOW PREVENTION UNIT SHALL HAVE A MAXIMUM PRESSURE LOSS OF 6.3 P.S.I. AT 2100 G.P.M.

DETAIL
NOT TO SCALE
7 C-207B

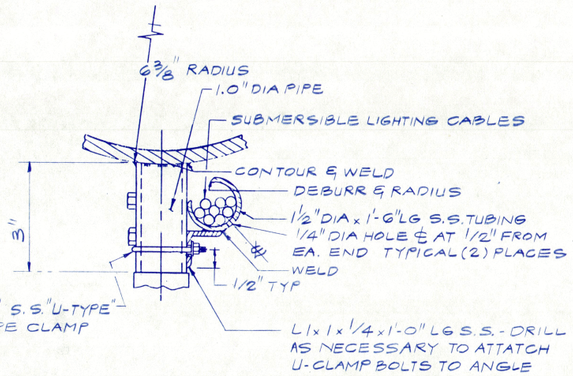

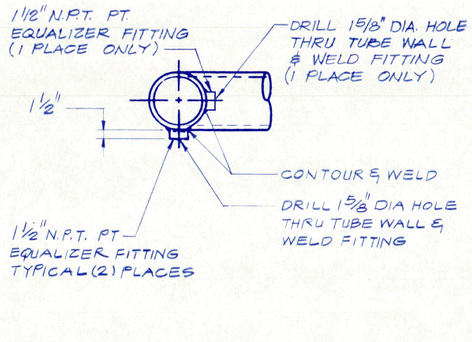

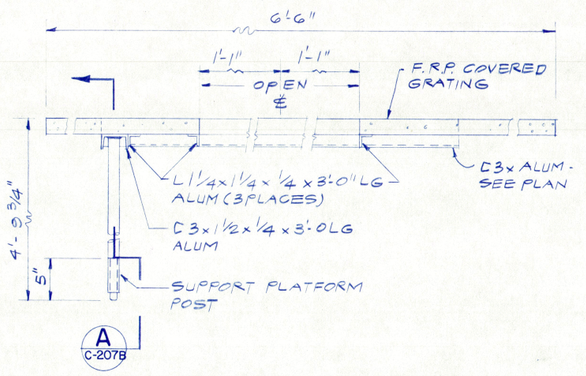

USE THIS TYPE OF FENCING MATERIALS FOR TRANSFORMER PAD (RFI 346) ⚠1

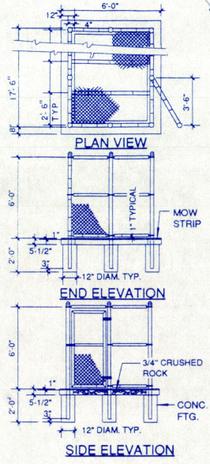

FENCING MATERIALS

1. FABRIC: 9 GAGE, 2" MESH, BLACK VINYL COATED AS SPECIFIED PER NOTICE TO CONTRACTORS, KNUCKLE TOP AND BOTTOM, PLACE ON OUTSIDE OF POSTS.
2. ALL FENCE MATERIALS SHALL BE AS INDICATED HEREON AND ELECTROSTATICALLY PAINTED BLACK TO MATCH FABRIC.
3. POSTS: CORNER POSTS 3" NOMINAL DIAMETER. LINE POSTS 2" NOMINAL DIAMETER. RAILS: TOP, BOTTOM AND MID-RAILS 1 1/4" NOMINAL DIA.
4. STRETCHER BAR: 3/16" x 3/4" WITH 1/8" x 1" TENSION BANDS AT 12" O.C., ALL FABRIC EDGES.
5. TIE WIRES: 11 GAGE AT 1' — 6" O.C. AT THE TOP, BOTTOM, MID-RAILS, AND LINE POSTS.
6. PROVIDE A 12" WIDE MOW STRIP AT BASE OF FENCE.
7. POST CAPS AND RAIL ENDS, CAST ALUMINUM. BRACE BANDS 1" x 1/8" SECURED WITH 3/8" BOLT.
8. GATE: 1-1/2" NOMINAL DIAMETER FRAME, MITER AND WELD FRAME, CAST ALUMINUM FORK LATCH, INDUSTRIAL BULLDOG HINGE (180° SWING) 3" FROM TOP AND BOTTOM.
9. FENCE MATERIALS PER SECTION 206-6, STANDARD SPECIFICATIONS.
10. ALLOW CONCRETE FOOTINGS TO SET FOR SEVEN DAYS PRIOR TO INSTALLING HARDWARE AND FABRIC.
11. 6" THICK LAYER OF 3/4" CRUSHED ROCK INSIDE CAGE, FLUSH WITH TOP OF MOW STRIP.
12. FOR BACKFLOW DEVICES 4" AND LARGER, EXTEND THE LENGTH OF THE CAGE TO 10' AND PROVIDE AN ADDITIONAL TOP SUPPORT RAIL.

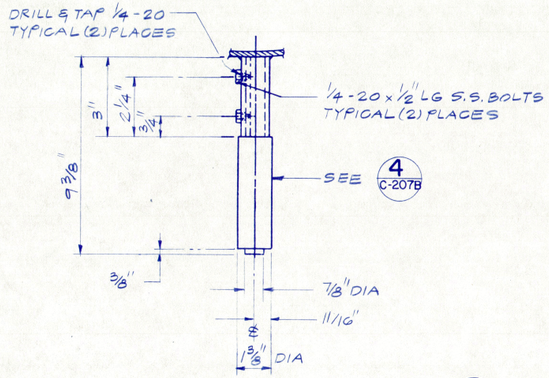

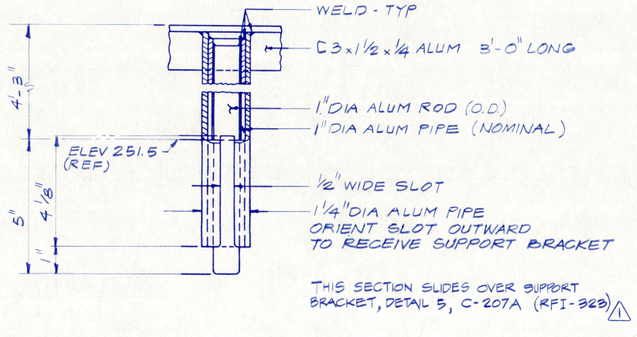

RECORD DRAWING

DETAIL
NOT TO SCALE
8 C-207B

REV	DATE	BY	SUB	APP	DESCRIPTION

THE PREPARATION OF THIS DRAWING HAS BEEN FINANCED IN PART THROUGH A GRANT FROM THE U.S. DEPARTMENT OF TRANSPORTATION, URBAN MASS TRANSPORTATION ADMINISTRATION, UNDER THE URBAN MASS TRANSPORTATION ACT OF 1964, AS AMENDED, AND IN PART BY THE TAXES OF THE CITIZENS OF LOS ANGELES COUNTY AND OF THE STATE OF CALIFORNIA.

REV	DATE	BY	SUB	APP	DESCRIPTION
⚠1	5.12.94	EM	1/DA		REVISED PER OM'S AS-BUILT MARKUPS RECEIVED 5-11-94
⚠2	4-29-93	PER	NP		NEW SHEET PER B201-CN-55.01

DESIGNED BY
DRAWN BY
CHECKED BY
IN CHARGE
DATE 4-29-93

REGISTERED PROFESSIONAL ENGINEER — DONALD W. LOGAN — No. 11717 — Exp 12-31-96 — CIVIL — STATE OF CALIFORNIA

Rail Construction Corporation
METRO RED LINE

a Subsidiary of the Los Angeles County Transportation Commission

ENGINEERING MANAGEMENT CONSULTANT
an association of:
Parsons Brinckerhoff Quade & Douglas, Inc.
Daniel, Mann, Johnson & Mendenhall
ICF-Kaiser Engineers (Calif.) Corp.
Escudero-Fribourg Architects
Jenkins Gales Martinez, Inc.
The Nathaship Group, Inc.

SUBMITTED
APPROVED

LA CBD TO NORTH HOLLYWOOD
WILSHIRE/ALVARADO TO WILSHIRE/VERMONT

FOUNTAIN DETAILS AND SECTIONS

CONTRACT NO	B201
DRAWING NO	C-207B
REV	1
SCALE	AS NOTED
SHEET NO	313B

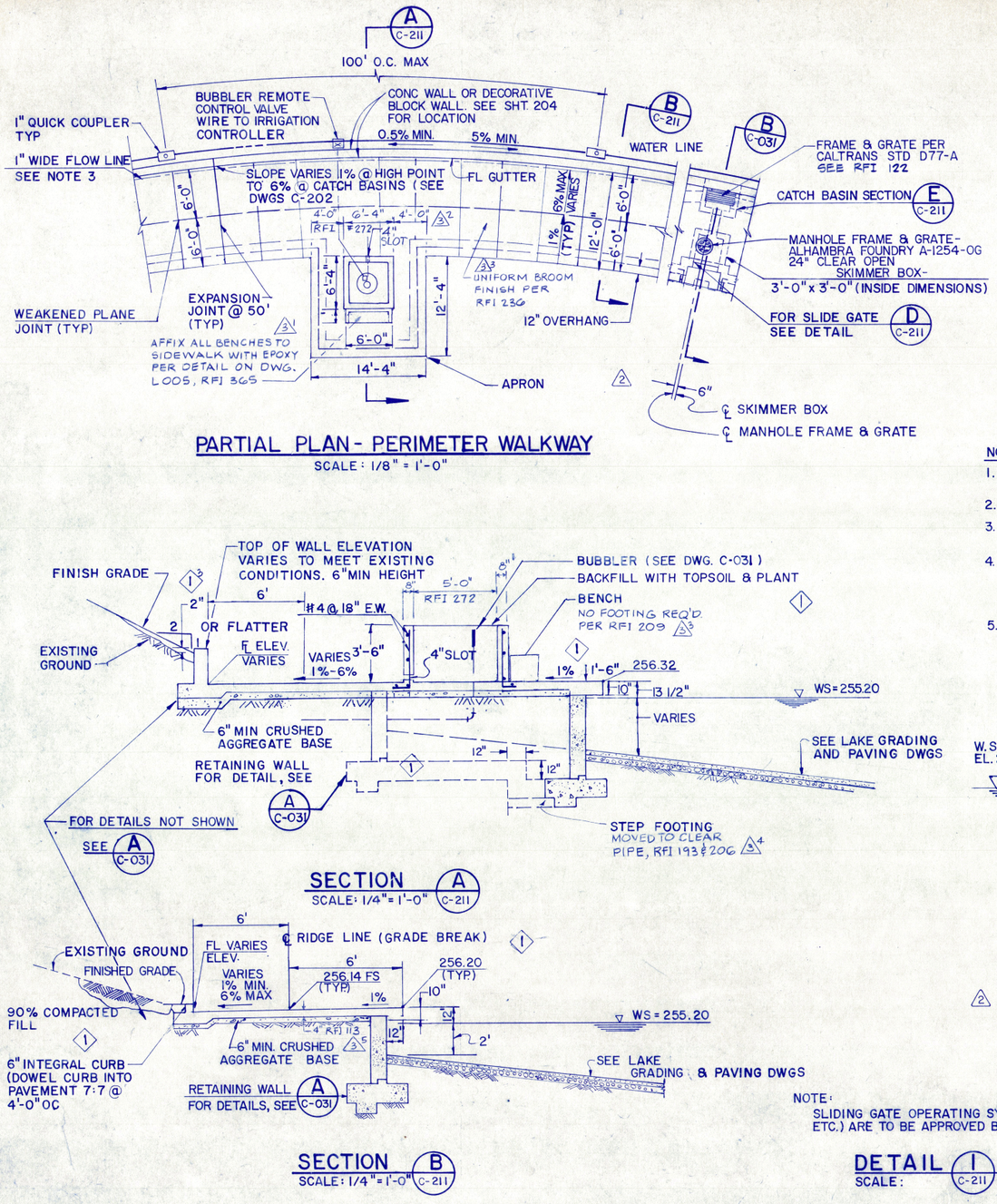

PARTIAL PLAN - PERIMETER WALKWAY

SCALE: 1/8" = 1'-0"

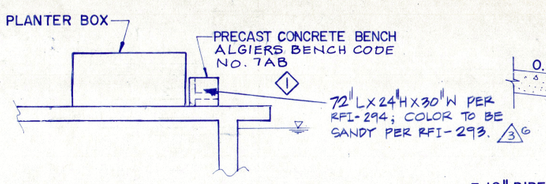

BENCH

SCALE 1/4" = 1'

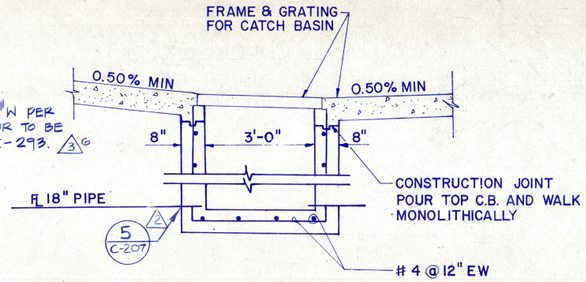

SECTION E C-211 CATCH BASIN

NO SCALE

SECTION A C-211

SCALE: 1/4" = 1'-0"

SECTION B

SCALE: 1/4" = 1'-0" C-211

NOTES:

1. SEE DWG. C-202 FOR LOCATION OF BUBBLERS.
2. SEE NOTE ON DWG. C-212.
3. PROVIDE 1" WIDE STEEL TROWELED FLOW LINE AT BACK OF WALK.
4. PROVIDE 1" DEEP WEAKENED PLANE JOINTS AT 5' OC RADIALLY AROUND LAKE & CIRCUMFERENTIALLY CONTINUOUS AT GRADE BREAK IN CENTER OF WALK.
5. PROVIDE 1/8" EXPANSION JOINTS @ 50' O C THRU WALL & CURB.

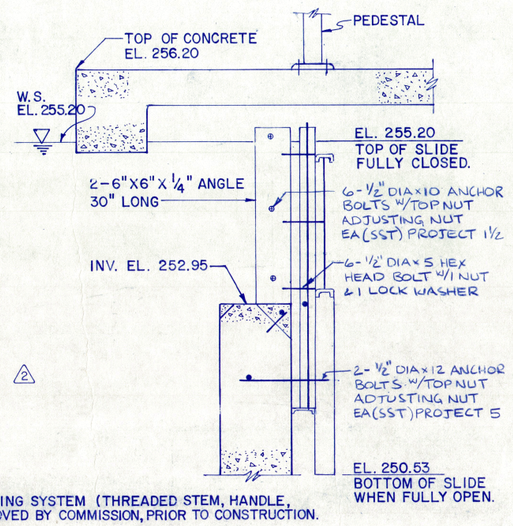

NOTE:
SLIDING GATE OPERATING SYSTEM (THREADED STEM, HANDLE, ETC.) ARE TO BE APPROVED BY COMMISSION, PRIOR TO CONSTRUCTION.

DETAIL 1 C-211 SKIMMER SLIDE GATE

SCALE:

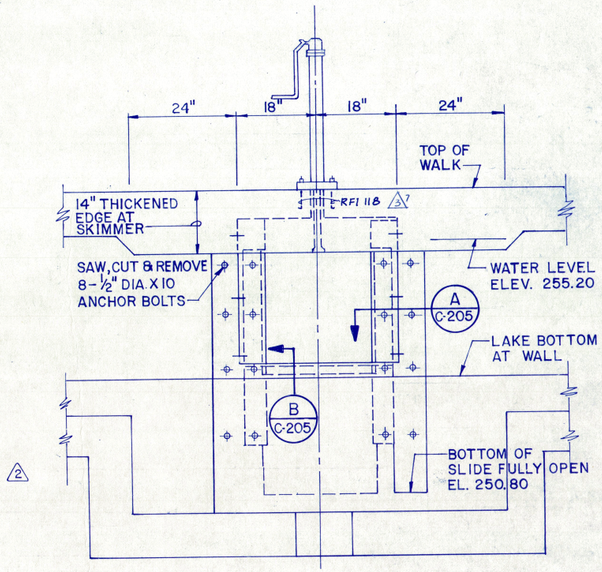

ELEVATION D C-211 SKIMMER SLIDE GATE

RECORD DRAWING

REV	DATE	BY	SUB	APP	DESCRIPTION
3	5.12.94	EA	DDA	GMC	REVISED PER CM'S AS-BUILT MARKUPS RECEIVED 5-11-94
2	4-29-93	PER	NP		REVISE PER B-201-CN-55.01
1	2/6/90	MH	OWL		ADDENDUM #1

THE PREPARATION OF THIS DRAWING HAS BEEN FINANCED IN PART THROUGH A GRANT FROM THE U.S. DEPARTMENT OF TRANSPORTATION, URBAN MASS TRANSPORTATION ADMINISTRATION, UNDER THE URBAN MASS TRANSPORTATION ACT OF 1964, AS AMENDED, AND IN PART BY THE TAXES OF THE CITIZENS OF LOS ANGELES COUNTY AND OF THE STATE OF CALIFORNIA.

DESIGNED BY
DRAWN BY FLORAITE DE CASTRO
CHECKED BY
IN CHARGE
DATE 9/4/90

REGISTERED PROFESSIONAL ENGINEER DONALD W. OWEN No. 11717 EXP. 12-31-91 CIVIL STATE OF CALIFORNIA

Rail Construction Corporation
A Subsidiary of the Los Angeles County Transportation Commission
METRO RED LINE

SUBMITTED

METRO RAIL TRANSIT CONSULTANTS
DMJM/PBQD/KE/HWA
APPROVED

LA CBD TO NORTH HOLLYWOOD
WILSHIRE/ALVARADO TO WILSHIRE/VERMONT

LAKE PERIMETER PLANS & SECTIONS

CONTRACT NO B201
DRAWING NO C-211 REV 3
SCALE AS NOTED
SHEET NO 314

137990

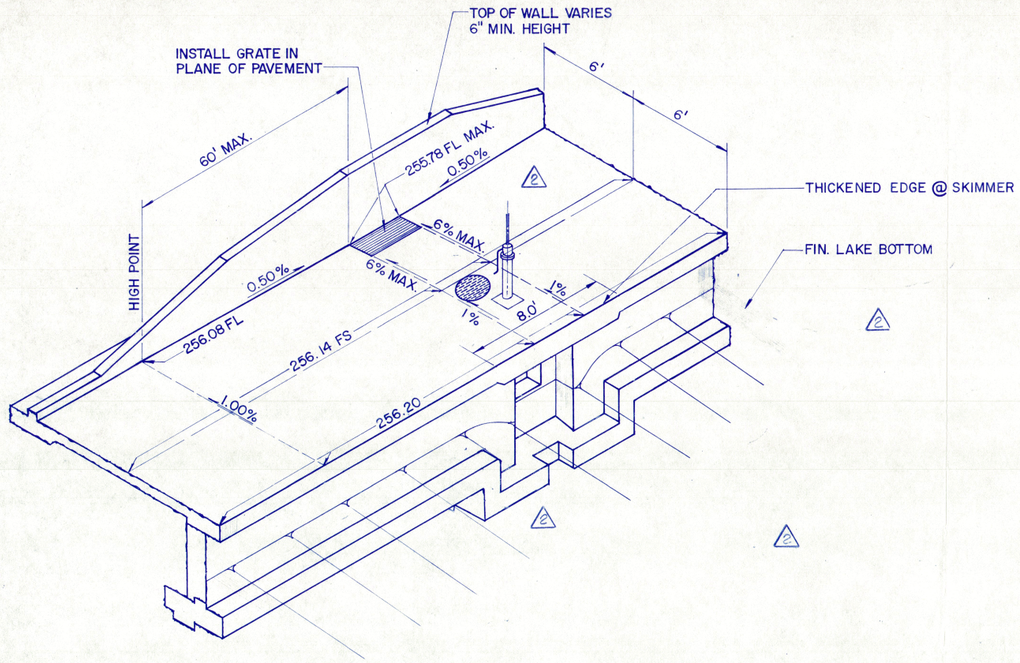

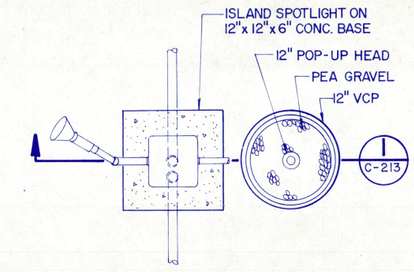

PLAN - AERATING LAKE FILL (5 / C-213)
NOT TO SCALE

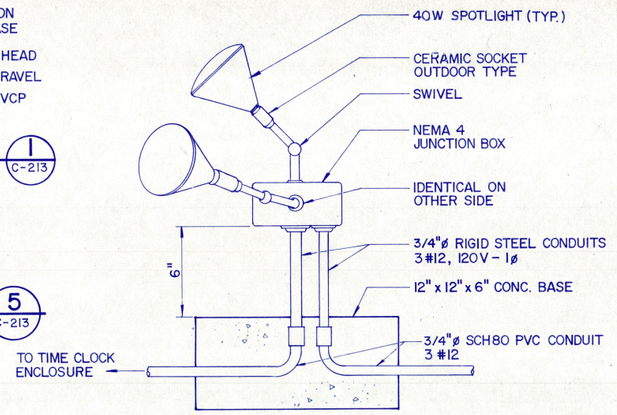

DETAIL - ISLAND SPOTLIGHT ASSEMBLY (4 / C-213)
NOT TO SCALE

ITEM	NORTHING	EASTING
A	133,276.21	203,996.65
B	133,269.18	203,982.26
C	133,337.66	203,955.04
D	133,372.43	203,919.39
E	133,392.95	203,961.69

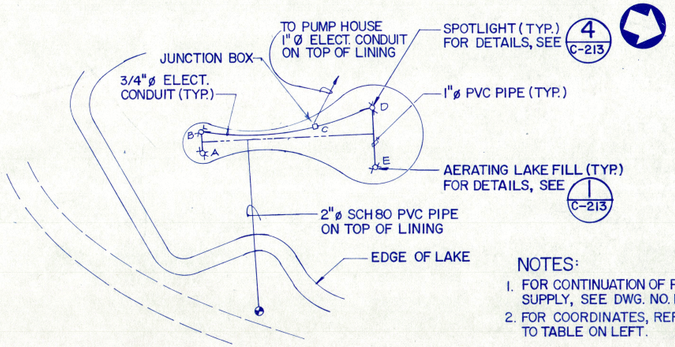

NOTES:
1. FOR CONTINUATION OF POWER SUPPLY, SEE DWG. NO. E-209.
2. FOR COORDINATES, REFER TO TABLE ON LEFT.

LIGHTED AERATING LAKE FILLS ON ISLAND (2 / C-213)
NOT TO SCALE

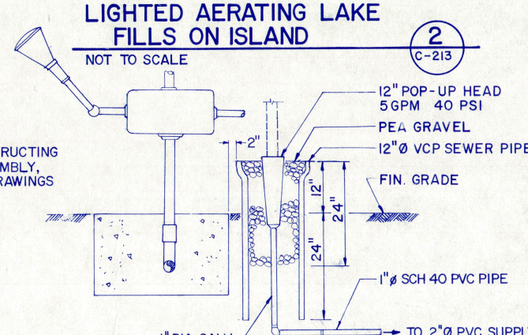

AERATING LAKE FILL (1 / C-213)
NOT TO SCALE

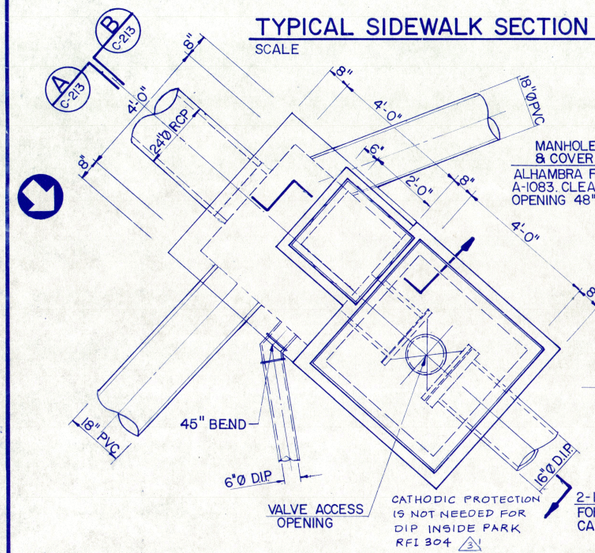

TYPICAL SIDEWALK SECTION @ SKIMMER
SCALE 1" = 4'-0"

COLLECTING STORM DRAIN & GATE VALVE MANHOLE STRUCTURE (3 / C-213 / C-205)
SCALE: 1/2" = 1'-0"

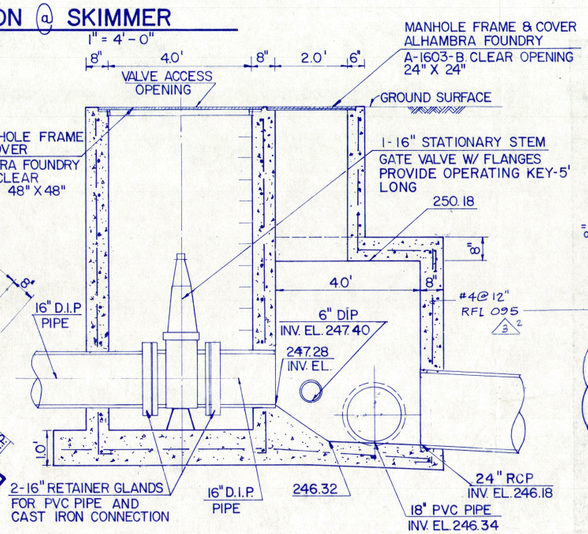

SECTION A (C-213)
SCALE: 1/2" = 1'-0"

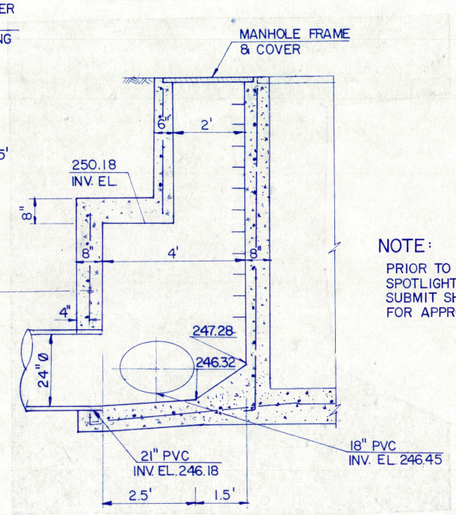

SECTION B (C-213)
SCALE: 1/2" = 1'-0"

NOTE:
PRIOR TO CONSTRUCTING SPOTLIGHT ASSEMBLY, SUBMIT SHOP DRAWINGS FOR APPROVAL.

RECORD DRAWING

REV	DATE	BY	SUB	APP	DESCRIPTION
2	5.12.94	EA	N/A	GMC	REVISED PER CM'S AS-BUILT MARKUPS RECEIVED
2	4.29.93	PER	NP		REVISED PER B201-CN-55.01
1	2.22.91	LT			ADDENDUM # 1

THE PREPARATION OF THIS DRAWING HAS BEEN FINANCED IN PART THROUGH A GRANT FROM THE U.S. DEPARTMENT OF TRANSPORTATION, URBAN MASS TRANSPORTATION ADMINISTRATION, UNDER THE URBAN MASS TRANSPORTATION ACT OF 1964, AS AMENDED, AND IN PART BY THE TAXES OF THE CITIZENS OF LOS ANGELES COUNTY AND OF THE STATE OF CALIFORNIA.

DESIGNED BY L. Talbot
DRAWN BY M. J. Rogue
CHECKED BY L. T. Sim
IN CHARGE M. Cofer
DATE 9.4.90

REGISTERED PROFESSIONAL ENGINEER — EUGENE T. GINTHER — No. 40429 — EXP. 5.31.91 — CIVIL — STATE OF CALIFORNIA

SUBMITTED L. T. Sim

Rail Construction Corporation
A Subsidiary of the Los Angeles County Transportation Commission
METRO RED LINE

METRO RAIL TRANSIT CONSULTANTS
DMJM/PBQD/KE/HWA
APPROVED

LA CBD TO NORTH HOLLYWOOD
WILSHIRE/ALVARADO TO WILSHIRE/VERMONT

MISCELLANEOUS DETAILS

CONTRACT NO B 201
DRAWING NO C-213 REV 3
SCALE AS NOTED
SHEET NO 315

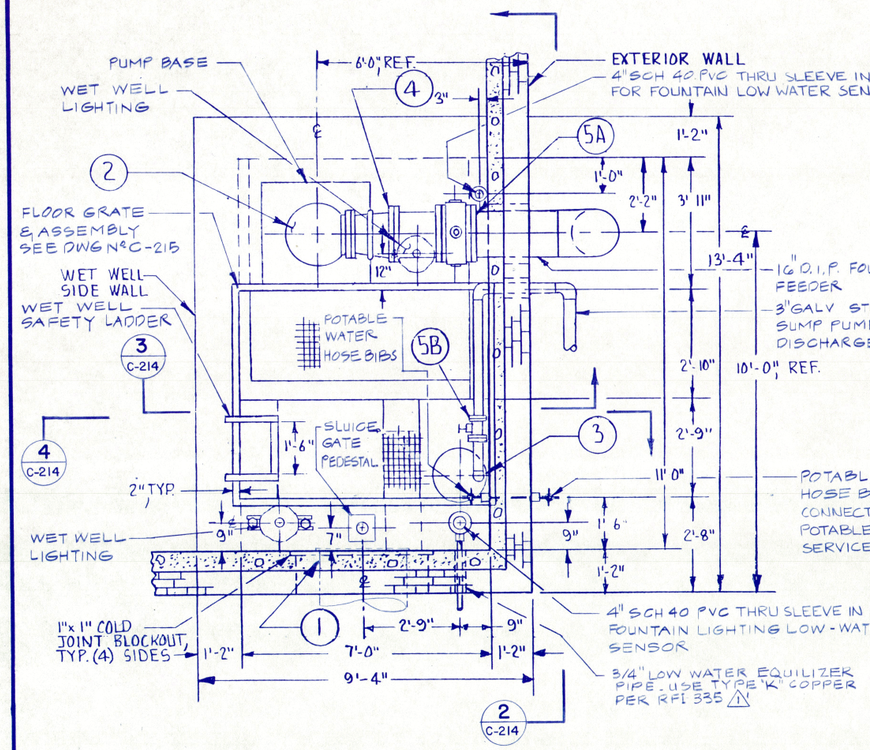

PLAN — NO SCALE — 1 C-214

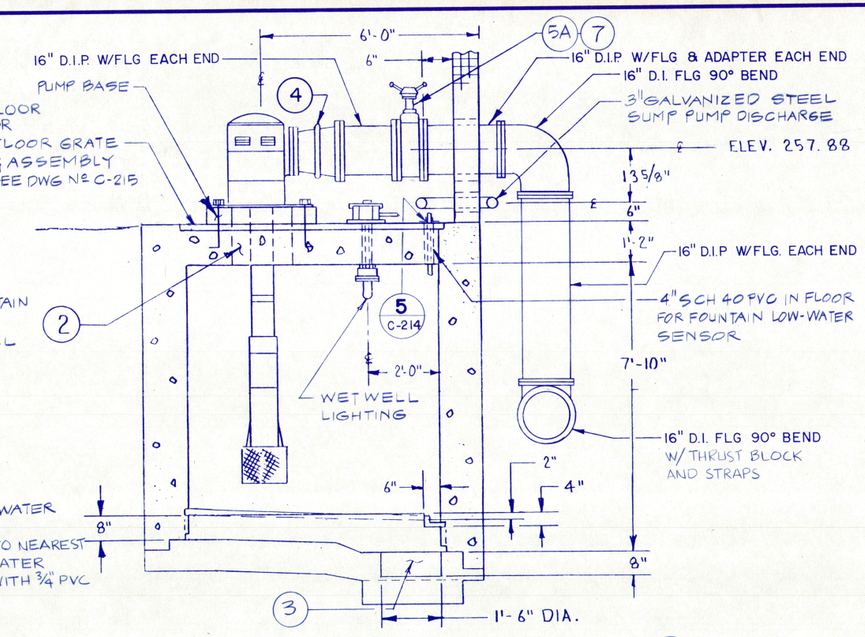

SECTION — NO SCALE — 3 C-214

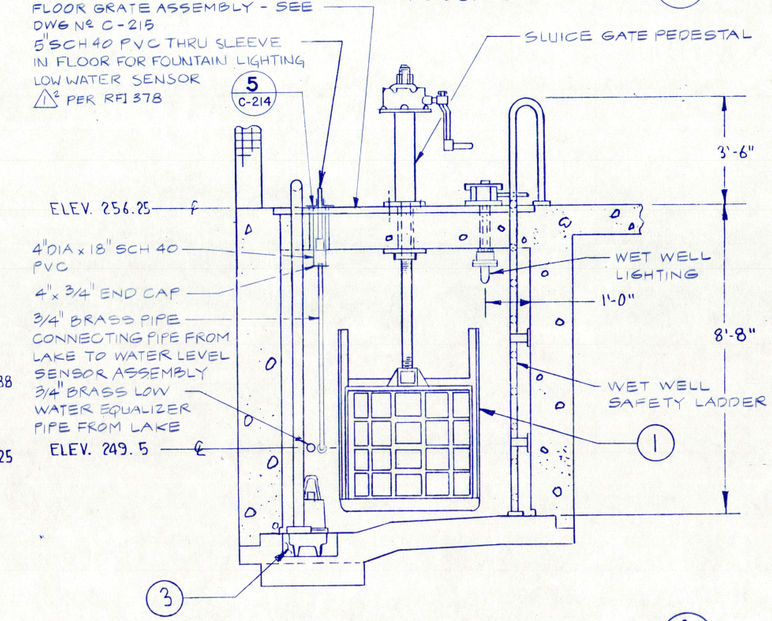

SECTION — NO SCALE — 4 C-214

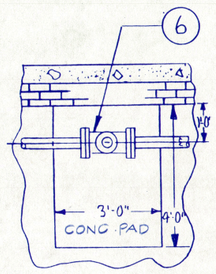

PARTIAL PLAN — NO SCALE — 2A C-214

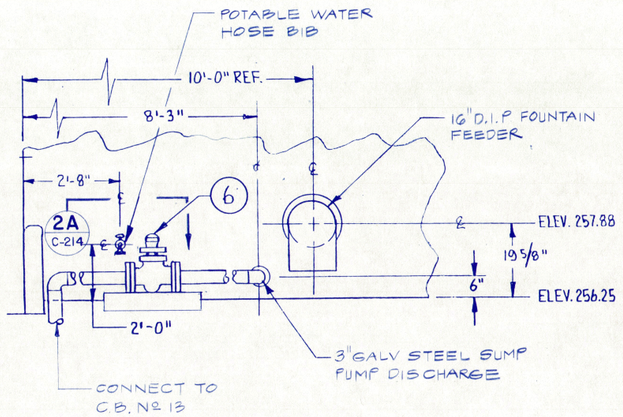

PARTAL ELEVATION — NO SCALE — 2 C-214

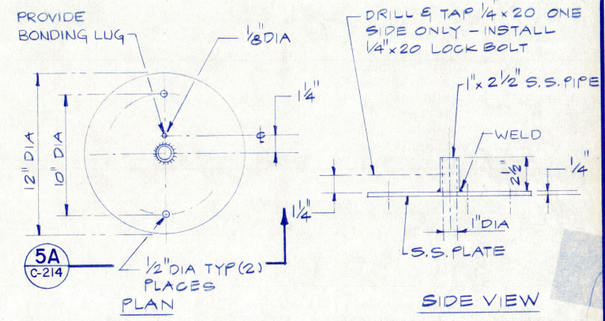

DETAIL (RETAINER PLATE) ASSEMBLY — NO SCALE — 5 C-214

DETAIL — NO SCALE — 5A C-214

NOTES

1. THIMBLE SHALL BE INSTALLED TO RECEIVE 30" X 30" 501 HEAVY DUTY SLUICE GATE FOR SEATING HEADS TO 55 FEET, FOR UNSEATING HEADS TO 20 FEET. FITTED WITH SIDE, TOP AND BOTTOM WEDGES. MATERIAL COMBINATION #3.

   INCLUDE PEDESTAL LIFT ASSEMBLY.

2. **FOUNTAIN PUMP**

   100 H.P. CAST IRON VERTICAL TURBINE PUMP. CLOSE COUPLED W/MECHANICAL SEAL 12" 125# FLANGED SURFACE DISCHARGED HEAD STYLE. TWO STAGE W/8'5" COLUMN/BOWL LENGTH DIMENSION. INCLUDE 18"Ø ENLARGED BOTTOM BELL. 1-½" Ø ST. ST. SHAFT/BRONZE IMPELLERS. 1800 R.P.M. MOTOR RATED AT 460V/60HZ/3Ø (404 TP) W/CLASS "F" INSULATION O.D.P. FRAME W/REDUCED VOLTAGE MAGNETIC STARTER REQUIREMENT. 32" SQ. X 7/8" STEEL SOLE PLATE. PROVIDE ¼" X 3½Ø DIAL LIQUID FILLED BRASS PRESSURE GAUGE W/ADJUSTABLE REFERENCE INDICATOR (@ 0-100# PSI) MINIMUM PUMP PERFORMANCE 1900 GPM @ 160 FT. T.D.H. INSTALL PUMPING UNIT WITH NO TEMPERATURE, VOLTAGE AND/OR FREQUENCY VARIATION FROM NAMEPLATE RATING (1.15 X 100 H.P.) BOWL UNIT/IMPELLER SELECTION SHALL PERMIT MAXIMUM PUMP PERFORMANCE WITHOUT EXCEEDING SERVICE FACTOR.

3. **SUMP PUMP**

   2 H.P. CAST IRON SUMP PUMP, RATED AT 230V/60HZ/1Ø W3" N.P.T. DISCHARGE GALVANIZED STEEL DISCHARGE PIPE SHALL BE FITTED WITH 3" FLANGED BALL VALVE (SEE NOTE 58). 0-30 PSI PRESSURE GAUGE SHALL BE LOCATED DOWN-STREAM FROM VALVE. 3" PIPE SHALL DISCHARGE TO WASTE THROUGH 4" INTERCEPT STRAINER (SEE NOTE 6A). SUPPORT VERTICAL PIPING WITH BRONZE PIPE SUPPORT ASSEMBLIES SUITABLE FOR THE APPLICATION. INTERIOR 3" HORIZONTAL PIPING SHALL BE SUPPORTED BY UNISTRUT PIPE SUPPORTS SUITABLE FOR THE APPLICATION. REFER TO ELECTRICAL NOTES FOR ELECTRICAL INSTALLATION REQUIREMENTS.

4. 16" D.I.P. FOUNTAIN FEEDER. **16"x 12" REDUCER** W/ STAY PROVISIONS.

5A. 16" BUTTERFLY VALVE W/FULL THREADED LUG BODY, CAST IRON BODY, ALUMINUM BRONZE DISC, S.S. STEAM, REINFORCED TEFLON BUSHING, BUNA N SEAT. GEAR OPERATOR SHALL INCLUDE POSITION INDICATOR PROVISION AND LOCKING PROVISION.

5B. 3" THREADED CAST IRON BALL VALVE WITH UNION PROVISION. PROVIDE 0-30# PSI 3½Ø LIQUID FILLED BRASS PRESSURE GAUGE DOWN-STREAM FROM 3" VALVE POSITION.

6. **SUMP PUMP INTERCEPT**

   A) 4" 125" FLANGED CAST IRON LARGE CAPACITY CLAMPED COVER BASKED TYPE STRAINER. MODIFIED TO FEATURE A SWING CLAMP COVER (LOCATE COVER HINGE ON BUILDING SIDE OF STRAINER.). STAINLESS STEEL PERFORATED COLLECTION BASKET WITH 5/32" Ø PERFORATIONS - 62% OPEN AREA.

   B) PROVIDE (2) 3" N.P.T. X 4" GALVANIZED 125# SCREWED REDUCING FLANGE.

   C) PROVIDE MINIMUM 3'0" X 4'0" CONCRETE SERVICE PAD. EMBED AND SUPPORT STRAINER AT FLANGE ELEVATION IN CONCRETE PAD.

7 REMOVE GEAR OPERATOR HANDLE AFTER SYSTEM HAS BEEN TESTED AND SET BY CONSULTANT.

RECORD DRAWING

REV	DATE	BY	SUB	APP	DESCRIPTION
1 ⚠2	5.11.94	EM	JDA	GMC	REVISED PER CM'S AS-BUILT MARK-UPS
0	4.30.93	PER	NP		NEW SHEET PER B201-C.N.-55.01

THE PREPARATION OF THIS DRAWING HAS BEEN FINANCED IN PART THROUGH A GRANT FROM THE U.S. DEPARTMENT OF TRANSPORTATION, URBAN MASS TRANSPORTATION ADMINISTRATION, UNDER THE URBAN MASS TRANSPORTATION ACT OF 1964, AS AMENDED, AND IN PART BY THE TAXES OF THE CITIZENS OF LOS ANGELES COUNTY AND OF THE STATE OF CALIFORNIA.

DESIGNED BY
DRAWN BY
CHECKED BY
IN CHARGE
DATE 4-29-93

REGISTERED PROFESSIONAL ENGINEER — DONALD W. LOGAN — No. 11217 — Exp 12-31-96 — CIVIL — STATE OF CALIFORNIA

Rail Construction Corporation
a Subsidiary of the Los Angeles County Transportation Commission
METRO RED LINE

ENGINEERING MANAGEMENT CONSULTANT
an association of
Parsons Brinckerhoff Quade & Douglas, Inc.
Daniel, Mann, Johnson & Mendenhall
ICF-Kaiser Engineers (Calif.) Corp.
Esquiero-Fribourg Architects
Jenkins Gales Martinez, Inc.
The Nethkship Group, Inc.

SUBMITTED
APPROVED

LA CBD TO NORTH HOLLYWOOD
WILSHIRE/ALVARADO TO WILSHIRE/VERMONT

PUMPHOUSE - SUMP INSTALLATIONS

CONTRACT NO B201
DRAWING NO C-214 REV 1
SCALE AS NOTED
SHEET NO 315A

6-4-93

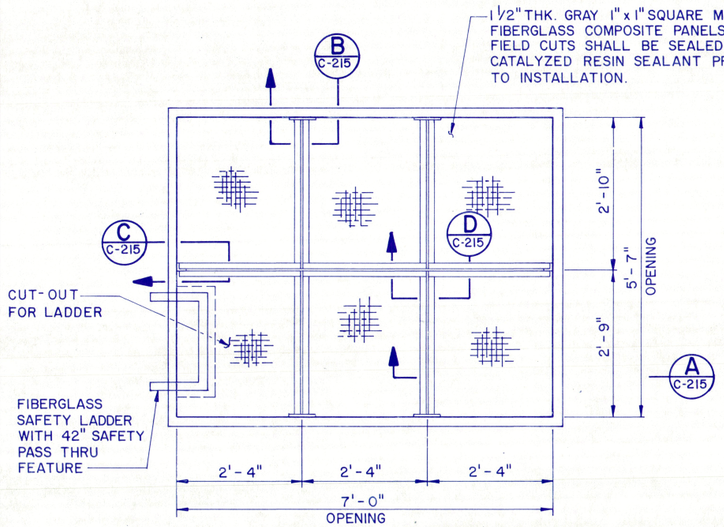

GRATE PLAN VIEW (1 C-215)
SCALE 3/4" = 1'-0"

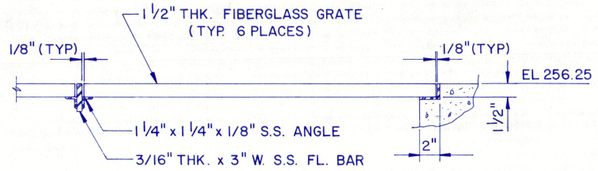

SECTION (A C-215)
SCALE 1 1/2" = 1'-0"

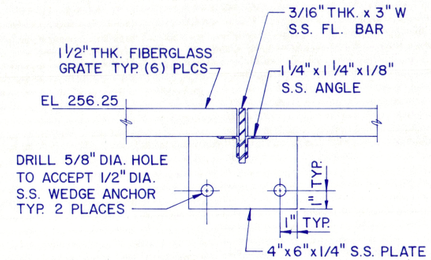

SECTION (B C-215)
SCALE 3" = 1'-0"

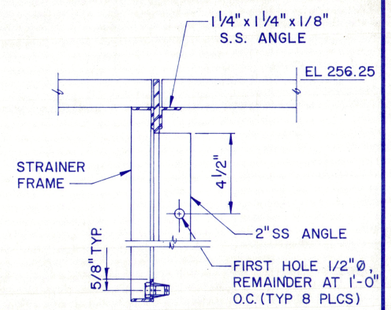

DETAIL (C C-215)
SCALE 3" = 1'-0"

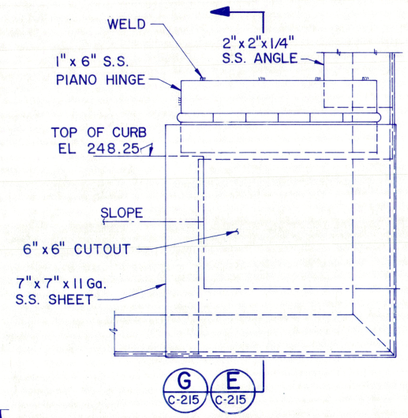

CHANNEL CLEANOUT COVER (4 C-215)
NOT TO SCALE

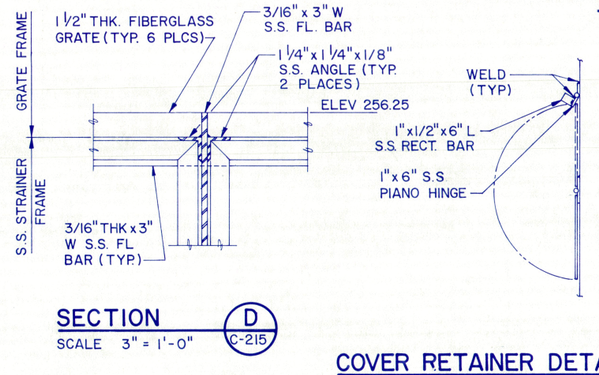

SECTION (D C-215)
SCALE 3" = 1'-0"

COVER RETAINER DETAIL (G C-215)
SCALE 2" = 1'-0"

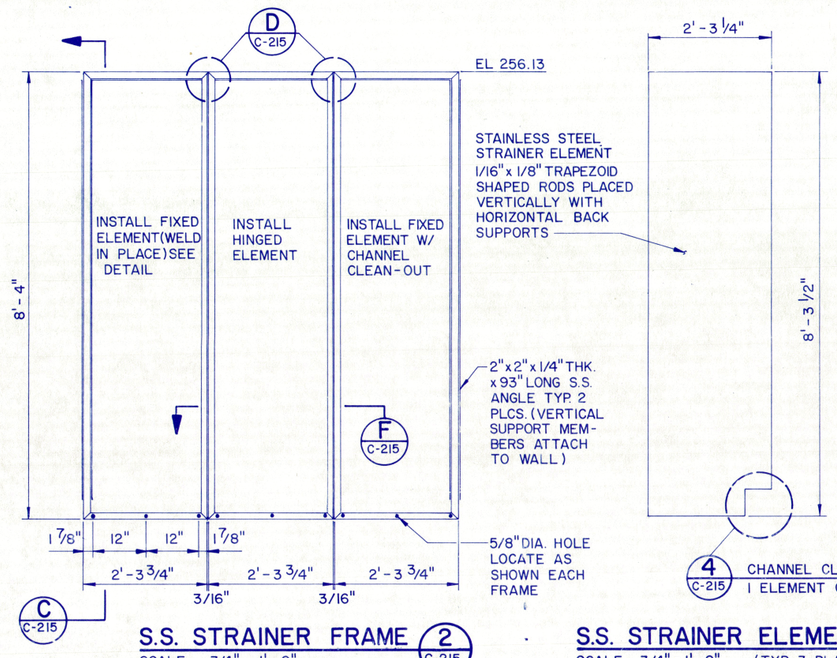

S.S. STRAINER FRAME (2 C-215)
SCALE 3/4" = 1'-0"

S.S. STRAINER ELEMENT (3 C-215)
SCALE 3/4" = 1'-0" (TYP. 3 PLACES)

CHANNEL CLEAN-OUT I ELEMENT ONLY

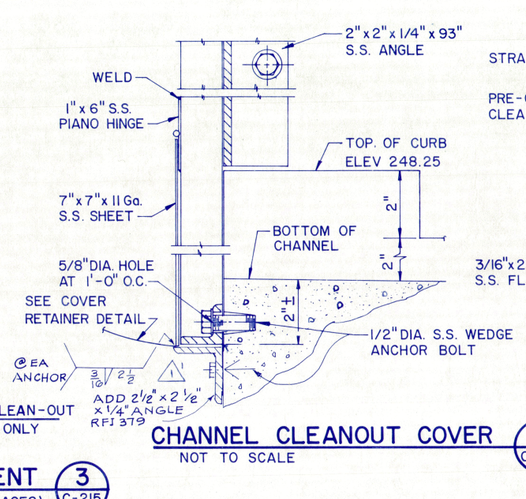

CHANNEL CLEANOUT COVER (E C-215)
NOT TO SCALE

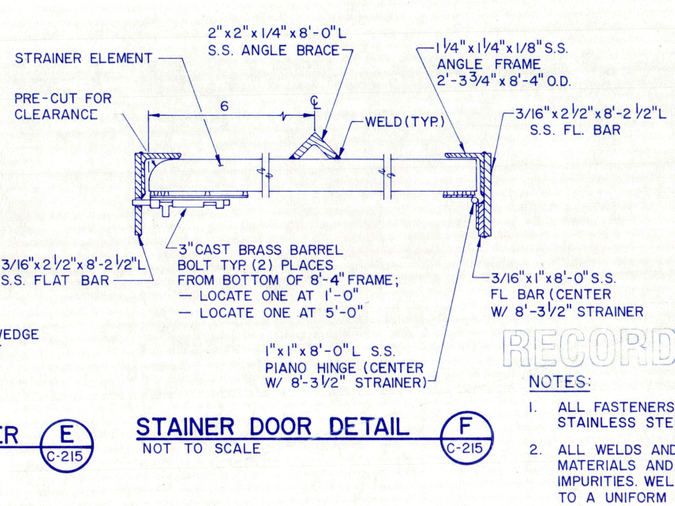

STAINER DOOR DETAIL (F C-215)
NOT TO SCALE

RECORD DRAWING

NOTES:

1. ALL FASTENERS WITHIN WELL SHALL BE STAINLESS STEEL.
2. ALL WELDS AND FILLS SHALL BE OF COMPATIBLE MATERIALS AND SHALL BE ARGON PURGED OF IMPURITIES. WELDS SHALL BE GROUND AND DRESSED TO A UNIFORM FINISH.

REV	DATE	BY	SUB	APP	DESCRIPTION
1	5.11.94	EM	9/22	GMC	REVISED PER CM'S AS-BUILT MARKUPS RECEIVED 5-11-94
2	4.29.93	PER	NP	CM	NEW SHEET PERB201-CN-55.01

THE PREPARATION OF THIS DRAWING HAS BEEN FINANCED IN PART THROUGH A GRANT FROM THE U.S. DEPARTMENT OF TRANSPORTATION, FEDERAL TRANSPORTATION ADMINISTRATION, UNDER THE URBAN MASS TRANSPORTATION ACT OF 1964, AS AMENDED, AND IN PART BY THE TAXES OF THE CITIZENS OF LOS ANGELES COUNTY AND OF THE STATE OF CALIFORNIA.

DESIGNED BY
DRAWN BY
CHECKED BY
IN CHARGE
DATE 4-29-93

REGISTERED PROFESSIONAL ENGINEER — DONALD W. LOVA — No. 11717 — Exp 12-31-94 — CIVIL — STATE OF CALIFORNIA

Rail Construction Corporation
A Subsidiary of the Los Angeles County Transportation Commission
METRO RED LINE

ENGINEERING MANAGEMENT CONSULTANT
an association of
Parsons Brinckerhoff Quade & Douglas, Inc.
Daniel, Mann, Johnson & Mendenhall
ICF-Kaiser Engineers (Calif.) Corp.
Escudero-Fribourg Architects
Jenkins Gales Martinez, Inc.
The Nettleship Group, Inc.

SUBMITTED
APPROVED

LA CBD TO NORTH HOLLYWOOD
WILSHIRE/ALVARADO TO WILSHIRE/VERMONT

PUMPHOUSE WETWELL COVER & SCREEN

CONTRACT NO B201
DRAWING NO C-215
REV 1
SCALE AS NOTED
SHEET NO 315B

154835

136468

6-4-93

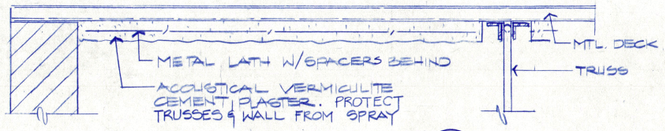

ACOUS. PLASTER 7 A-202

SCALE: 1½"=1'-0

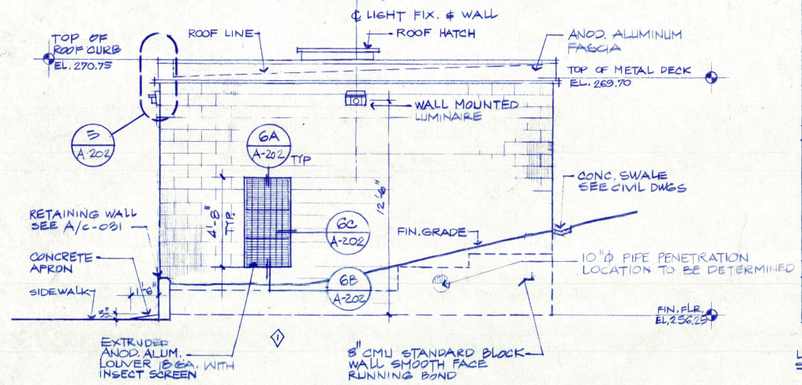

WEST ELEVATION 6 A-201

SCALE: ¼"=1'-0

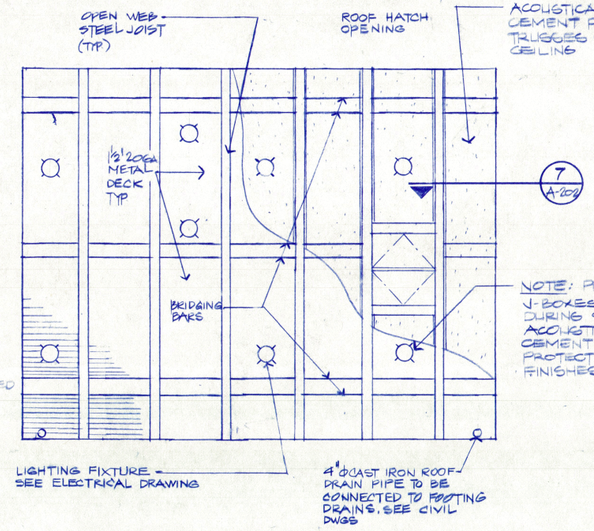

REFLECTED CEILING PLAN 4 A-201

SCALE: ¼"=1'-0

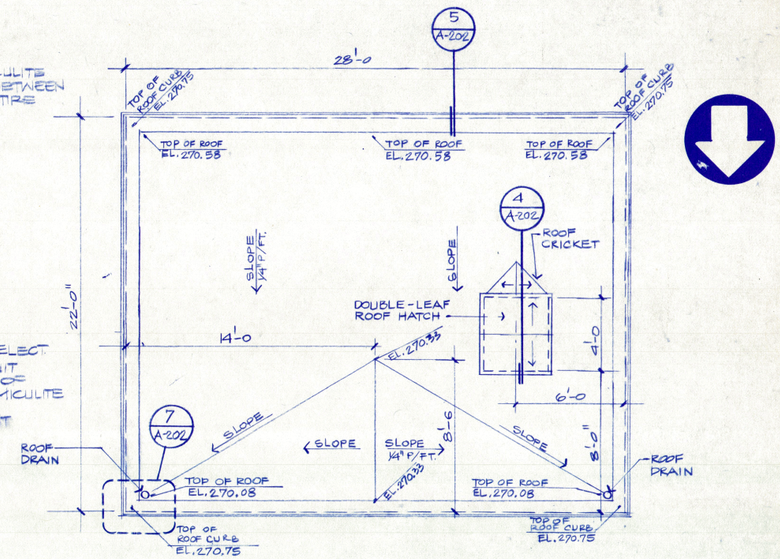

ROOF PLAN 2 A-201

SCALE: 1/4"=1'-0"

EAST ELEVATION 5 A-201

SCALE: ¼"=1'-0"

NORTH ELEVATION 3 A-201

SCALE: ¼"=1'-0"

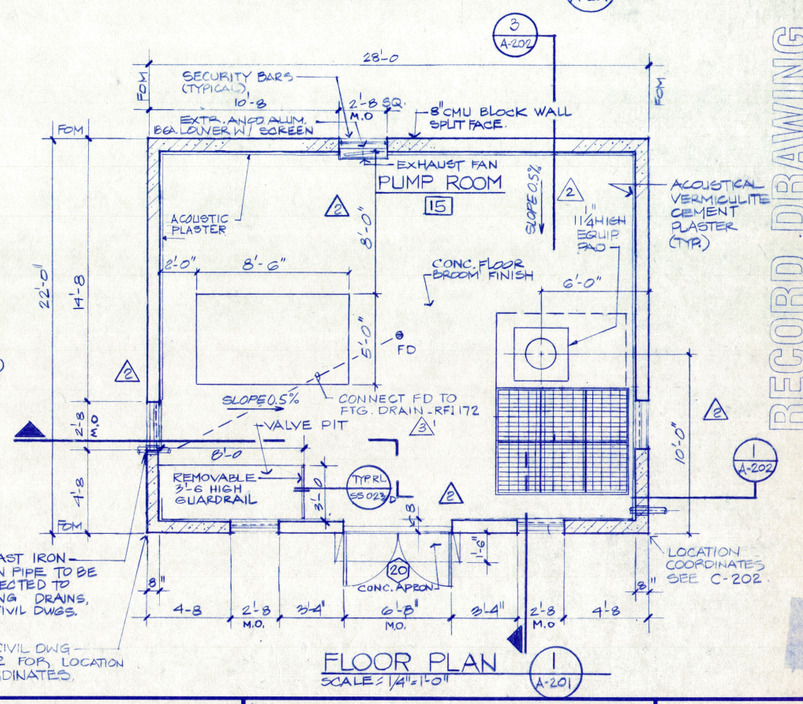

FLOOR PLAN 1 A-201

SCALE: 1/4"=1'-0"

RECORD DRAWING

REV	DATE	BY	SUB	APP	DESCRIPTION
3	5.11.94	EA	TDA	GMC	REVISED PER CMC'S AS-BUILT MARKUPS RECEIVED 5-12-94
2	4-29-93	PER	NP		REVISED PER B201-CN-55.01
1	2-22-91	AE	AWE	RM	ADDENDUM #1

THE PREPARATION OF THIS DRAWING HAS BEEN FINANCED IN PART THROUGH A GRANT FROM THE U.S. DEPARTMENT OF TRANSPORTATION, URBAN MASS TRANSPORTATION ADMINISTRATION, UNDER THE URBAN MASS TRANSPORTATION ACT OF 1964, AS AMENDED, AND IN PART BY THE TAXES OF THE CITIZENS OF LOS ANGELES COUNTY AND OF THE STATE OF CALIFORNIA.

DESIGNED BY
DRAWN BY
CHECKED BY
IN CHARGE R.M. Desimone
DATE 9/4/1990

REGISTERED ARCHITECT RALPH M. DESIMONE No. C 21525 EXP. 4-30-91 STATE OF CALIFORNIA

Rail Construction Corporation
a Subsidiary of the Los Angeles County Transportation Commission
METRO RED LINE

SUBMITTED R.M. Desimone

METRO RAIL TRANSIT CONSULTANTS
DMJM/PBQD/KE/HWA

APPROVED

LA CBD TO NORTH HOLLYWOOD
WILSHIRE/ALVARADO TO WILSHIRE/VERMONT

PUMP HOUSE
PLANS AND ELEVATIONS

CONTRACT NO B-201
DRAWING NO A-201 REV 3
SCALE AS NOTED
SHEET NO 316

6-4-93

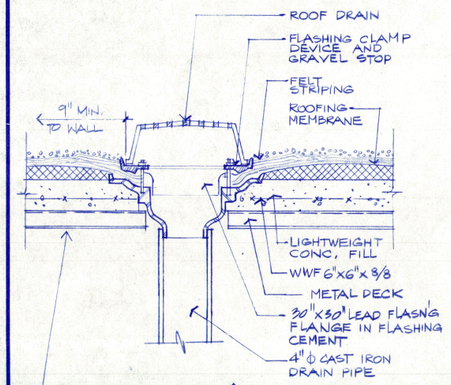

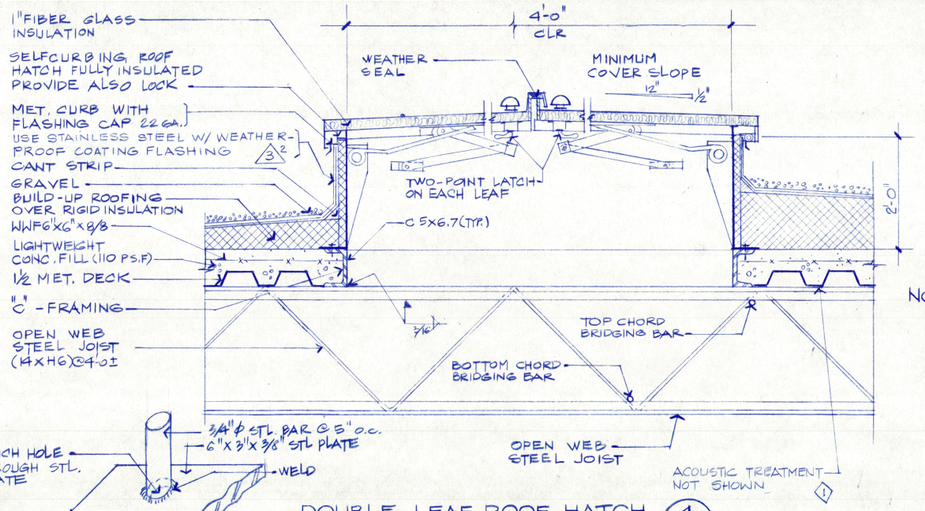

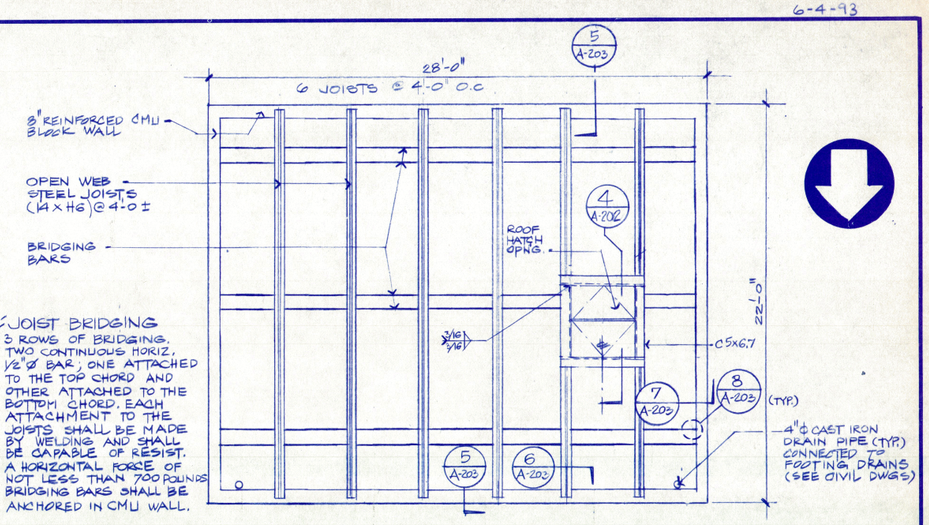

NOTE: JOIST BRIDGING
- 3 ROWS OF BRIDGING. TWO CONTINUOUS HORIZ. ½"ϕ BAR, ONE ATTACHED TO THE TOP CHORD AND OTHER ATTACHED TO THE BOTTOM CHORD. EACH ATTACHMENT TO THE JOISTS SHALL BE MADE BY WELDING AND SHALL BE CAPABLE OF RESIST. A HORIZONTAL FORCE OF NOT LESS THAN 700 POUNDS BRIDGING BARS SHALL BE ANCHORED IN CMU WALL.

DETAIL - 1A (N.T.S)

ROOF DRAIN DETAIL 7 A-202

SCALE: (N.T.S)

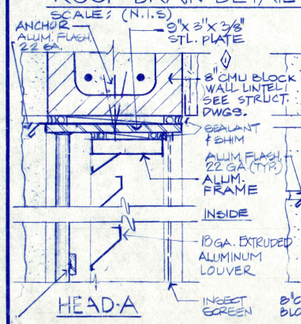

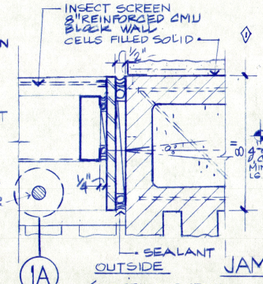

ALUMINUM LOUVER WITH INSECT SCREEN DETAILS 6 A-202

3" =1'-0 FOR INSTALLATION OF LOUVER SEE RFI-388

1"x ⅜" BAR @ 1/3 POINTS OF LOUVER WELD EA SIDE OF RD. BARS TO FLAT BAR, HORIZONTAL

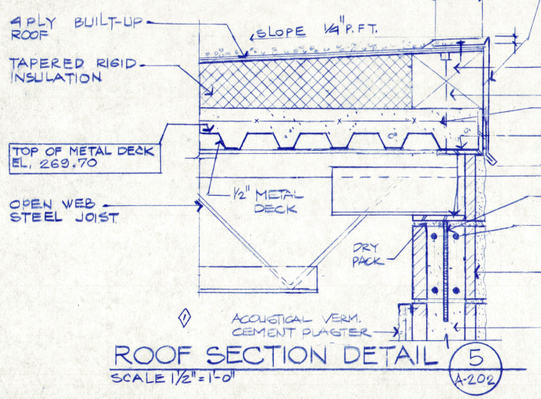

ROOF SECTION DETAIL 5 A-202

SCALE 1½"=1'-0"

DOUBLE-LEAF ROOF HATCH 4 A-202

SCALE: 1½" =1'-0"

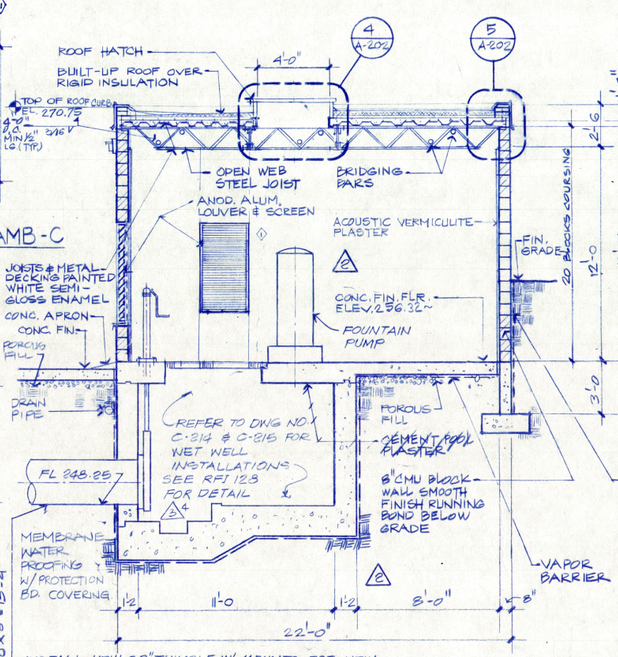

SECTION 3 A-202

SCALE: ¼" =1'-0"

ROOF FRAMING PLAN 2 A-202

SCALE ⅛" =1'-0"

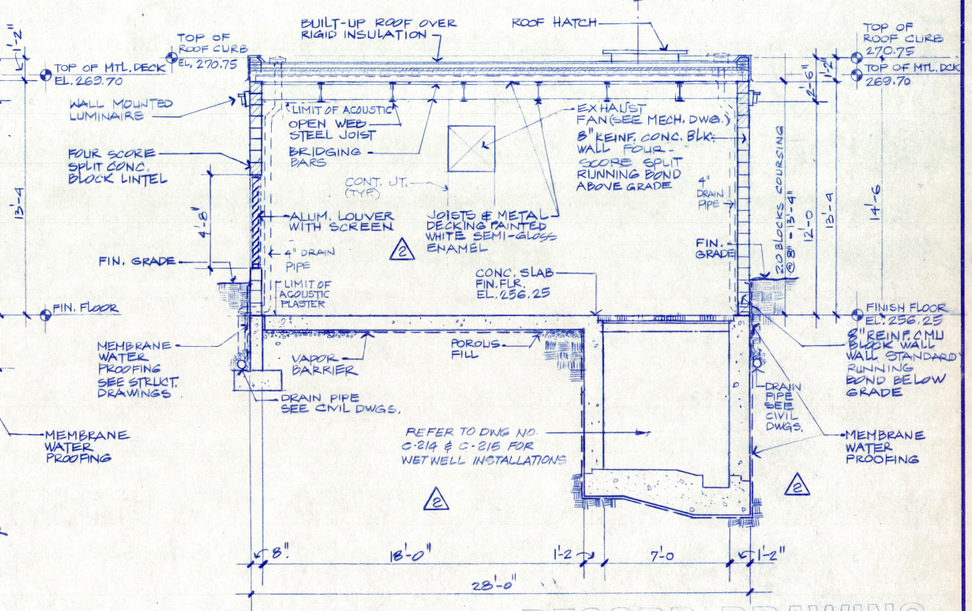

SECTION 1 A-202

SCALE: ¼" =1'-0

RECORD DRAWING

REV	DATE	BY	SUB	APP	DESCRIPTION
3	5.12.94	EM	NA	GMC	REVISED PER GM'S AS-BUILT MARKUPS. RECEIVED 5-11-94
2	4-29-93	PER	NP		REVISED PER B201-CN-55.01
1	2.22.91	MC	RD	RM	ADDENDUM # 1

THE PREPARATION OF THIS DRAWING HAS BEEN FINANCED IN PART THROUGH A GRANT FROM THE U.S. DEPARTMENT OF TRANSPORTATION, URBAN MASS TRANSPORTATION ADMINISTRATION, UNDER THE URBAN MASS TRANSPORTATION ACT OF 1964, AS AMENDED, AND IN PART BY THE TAXES OF THE CITIZENS OF LOS ANGELES COUNTY AND OF THE STATE OF CALIFORNIA.

DESIGNED BY
DRAWN BY
CHECKED BY
IN CHARGE R.M. Desimone
DATE 9/4/1990

REGISTERED ARCHITECT RALPH M. DESIMONE No. C 21525 EXP. 4-30-91 STATE OF CALIFORNIA

Rail Construction Corporation
a Subsidiary of the Los Angeles County Transportation Commission
METRO RED LINE

SUBMITTED R.M. Desimone

METRO RAIL TRANSIT CONSULTANTS
DMJM/PBQD/KE/HWA
APPROVED

LA CBD TO NORTH HOLLYWOOD
WILSHIRE/ALVARADO TO WILSHIRE/VERMONT

PUMP HOUSE
PLAN, SECTIONS AND DETAILS

CONTRACT NO B-201
DRAWING NO A-202 REV 3
SCALE AS NOTED
SHEET NO 317

138606

(6-4-93)

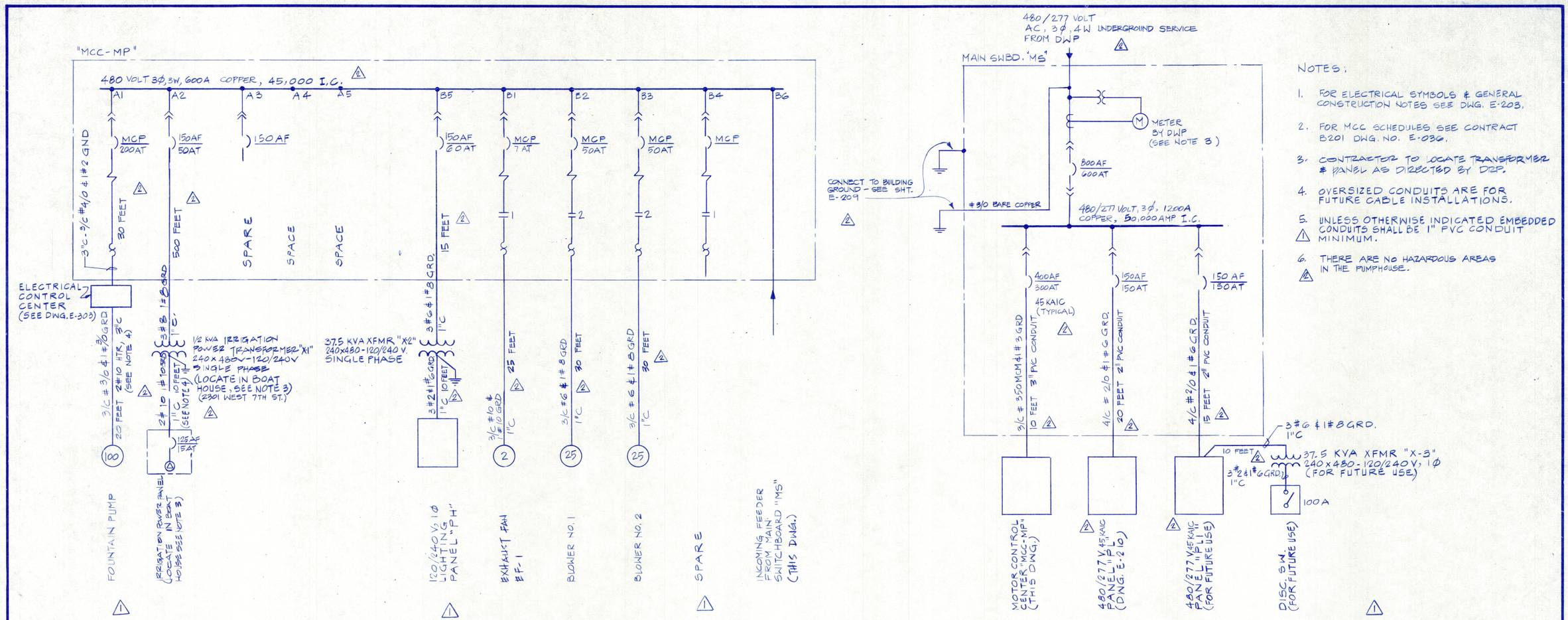

NOTES:

1. FOR ELECTRICAL SYMBOLS & GENERAL CONSTRUCTION NOTES SEE DWG. E-203.
2. FOR MCC SCHEDULES SEE CONTRACT B201 DWG. NO. E-036.
3. CONTRACTOR TO LOCATE TRANSFORMER & PANEL AS DIRECTED BY DRP.
4. OVERSIZED CONDUITS ARE FOR FUTURE CABLE INSTALLATIONS.
5. UNLESS OTHERWISE INDICATED EMBEDDED CONDUITS SHALL BE 1" PVC CONDUIT MINIMUM.
6. THERE ARE NO HAZARDOUS AREAS IN THE PUMPHOUSE.

RECORD DRAWING

REV	DATE	BY	SUB	APP	DESCRIPTION
2	5/10/94	EM	MA	[illegible]	NO REVISIONS INDICATED ON "M"S AS-BUILT MARKUPS RECEIVED 5-11-94
1	11/1/93	[illegible]	[illegible]	[illegible]	REVISED PER B201-CN-72
1	5/6/93	[illegible]	[illegible]	[illegible]	REVISED PER B201-CN-55.01

THE PREPARATION OF THIS DRAWING HAS BEEN FINANCED IN PART THROUGH A GRANT FROM THE U.S. DEPARTMENT OF TRANSPORTATION, URBAN MASS TRANSPORTATION ADMINISTRATION, UNDER THE URBAN MASS TRANSPORTATION ACT OF 1964, AS AMENDED, AND IN PART BY THE TAXES OF THE CITIZENS OF LOS ANGELES COUNTY AND OF THE STATE OF CALIFORNIA.

DESIGNED BY H. Lunsford
DRAWN BY M.A. UDRESCU
CHECKED BY P. S. Hedner
IN CHARGE L. Smith
DATE 8/31/90

REGISTERED ELECTRICAL ENGINEER PHILIP S. HEDNER No. 1485 EXP. 6-30-94 STATE OF CALIFORNIA

Rail Construction Corporation
a Subsidiary of the Los Angeles County Transportation Commission
METRO RED LINE

SUBMITTED Philip S. Hedner

METRO RAIL TRANSIT CONSULTANTS
DAIM/PBQD/KE/HWA
APPROVED

LA CBD TO NORTH HOLLYWOOD
WILSHIRE/ALVARADO WILSHIRE/VERMONT
PUMP HOUSE
ONE LINE DIAGRAM

CONTRACT NO B201
DRAWING NO E-208 REV 3
SCALE NO SCALE
SHEET NO 324

139606

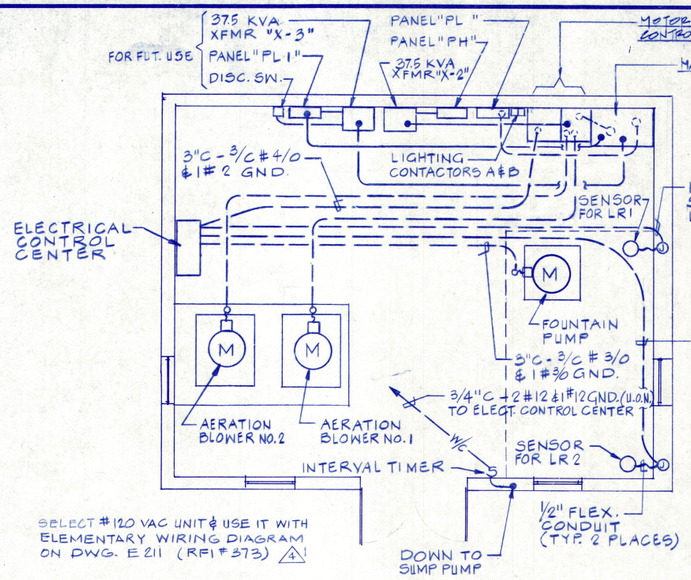

BLOWERS & FOUNTAIN PUMP PLAN

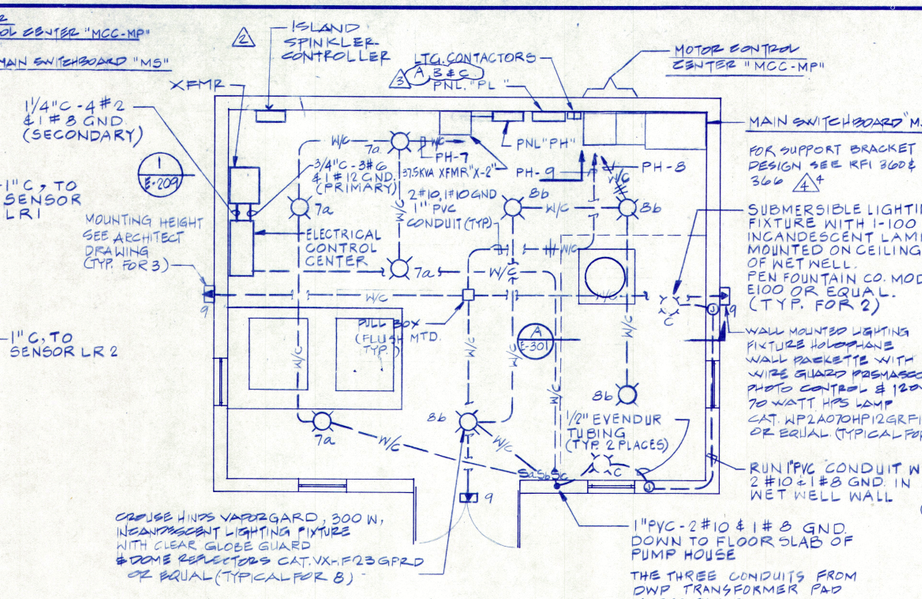

LIGHTING PLAN

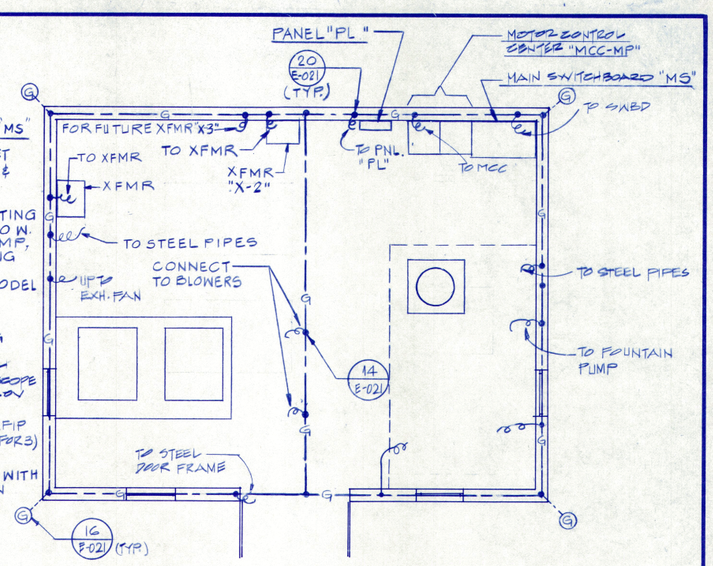

GROUNDING LAYOUT

(FOR GROUNDING SYMBOLS SEE DWG E-001)

(GROUNDING IN PUMP HOUSE SHALL BE IN ACCORDANCE WITH PARAGRAPH 2.2.1.G IN FOUNTAIN & LIGHTING SPECIFICATIONS ON DWG. NO. E-300)

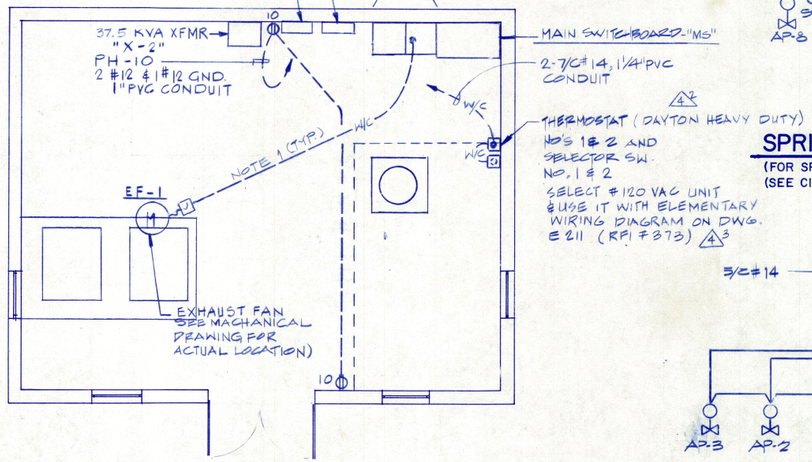

EXHAUST FANS & RECEPTACLE PLAN

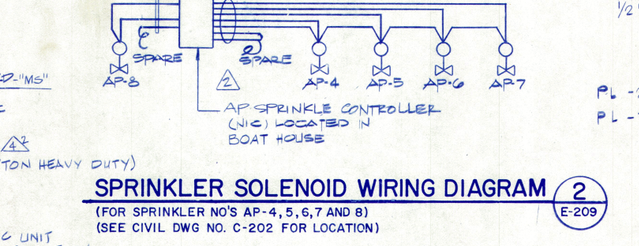

SPRINKLER SOLENOID WIRING DIAGRAM 2

(FOR SPRINKLER NO'S AP-4, 5, 6, 7 AND 8)

(SEE CIVIL DWG NO. C-202 FOR LOCATION)

E-209

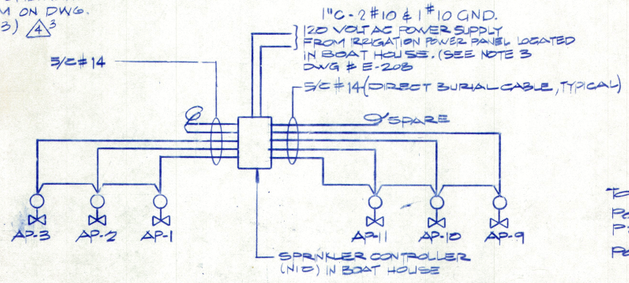

SPRINKLER SOLENOID WIRING DIAGRAM 3

(FOR SPRINKLERS NO'S AP-1, 2, 3, 9, 10 AND 11)

(SEE CIVIL DWG NO. C-202 FOR LOCATION)

E-209

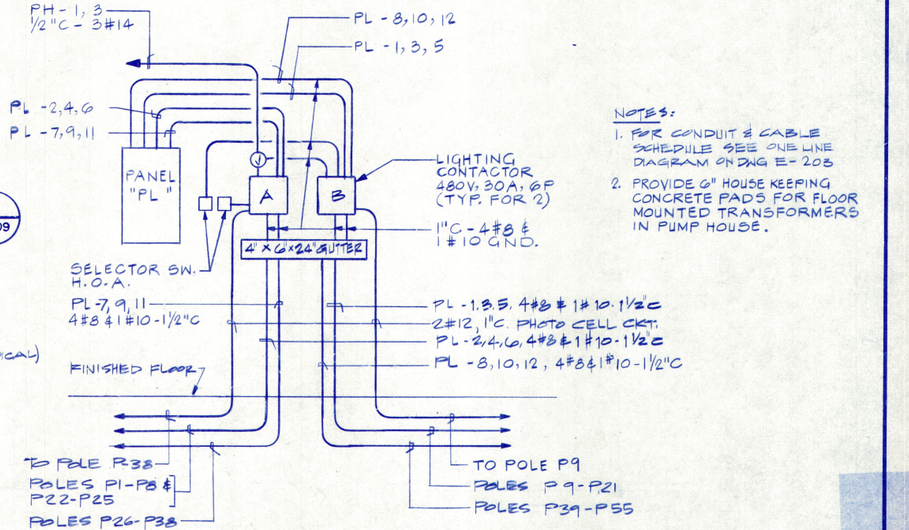

NOTES:

1. FOR CONDUIT & CABLE SCHEDULE SEE ONE LINE DIAGRAM ON DWG E-205
2. PROVIDE 6" HOUSE KEEPING CONCRETE PADS FOR FLOOR MOUNTED TRANSFORMERS IN PUMP HOUSE.

SECTION 1

N.T.S.

E-209

RECORD DRAWING

REV	DATE	BY	SUB	APP	DESCRIPTION
4 5	5.12.94	EM	TDA	GMC	REVISED PER CBM & ADDENDUM MARKUPS RECEIVED 5.12.94.
3	8/24/93	HA	TDA	GMC	ADDED PER B201-CN-55.01
2	8/18/93	HA	TDA	[illegible]	REVISED PER B201-CN-55.01
1	5/6/93	HA	[illegible]	[illegible]	GENERAL REV. PER B201-CN-55.01

THE PREPARATION OF THIS DRAWING HAS BEEN FINANCED IN PART THROUGH A GRANT FROM THE U.S. DEPARTMENT OF TRANSPORTATION, URBAN MASS TRANSPORTATION ADMINISTRATION, UNDER THE URBAN MASS TRANSPORTATION ACT OF 1964, AS AMENDED, AND IN PART BY THE TAXES OF THE CITIZENS OF LOS ANGELES COUNTY AND OF THE STATE OF CALIFORNIA.

DESIGNED BY A. Lewis
DRAWN BY R. Regan
CHECKED BY [illegible]
IN CHARGE A. Smith
DATE 8/31/90

REGISTERED PROFESSIONAL ENGINEER PHILIP S. HEDRICK No. 1485 EXP. 6-30-94 ELECTRICAL STATE OF CALIFORNIA

Rail Construction Corporation
a Subsidiary of the Los Angeles County Transportation Commission
METRO RED LINE

SUBMITTED [signature]

METRO RAIL TRANSIT CONSULTANTS
DMJM/PBQD/KE/HWA

APPROVED [signature]

LA CBD TO NORTH HOLLYWOOD
WILSHIRE/ALVARADO WILSHIRE/VERMONT
PUMP HOUSE LIGHTING & EQUIPMENT LAYOUT

CONTRACT NO B201
DRAWING NO E-209 REV 4
SCALE NO SCALE
SHEET NO 325

1308806

PANEL "PL"

LOCATION: PUMP HOUSE (MECHANICAL ROOM)
MOUNTING: WALL MOUNTED
VOLTAGE 480/277 3Ø, 4W
TYPE OF MAINS 150 A M.BKR/M.L.O.
FEEDER 4-2/0, 1#6 GND.

DESCRIPTION	WATTAGE ØA	ØB	ØC	BKR AMP	POLE	CKT	A B C	CKT	POLE	BKR AMP	WATTAGE ØA	ØB	ØC	DESCRIPTION
LAKE PERIMETER (P9, P12) P8 ROAD LIGHTING P18, P21	2310			20	1	1		2	1	20	1860			LAKE PERIMETER (P8, P8, ROAD LIGHTING P21, P24)
(P10, P13, P16 P19)		1860				3		4				1860		(P7, P4, P1, P7, P4)
(P11, P14, P17 P20, P23)			1860			5		6					1860	(P5, P8, P24 P2)
WALKWAY LIGTING (P38, P35, P32, P29, P26, P23)	2310			20	1	7		8	1	20	2790			WALKWAY LIGTING (P44, P41, P38, P35, P32)
(P37, P34, P31, P28, P25)		1860				9		10				2320		(P29, P26, P23, P20, P17)
(P36, P33, P30, P27, P24)			1860			11		12					2790	(P35, P32, P29, P26, P23, P20)
SPARE				20		13		14	3	60	9600			POWER RECEPTACLE AT MANHOLE
SPARE				20		15		16				9600		
				20		17		18					9600	
SPARE						19		20						
				30	3	21		22						
						23		24						
						25		26						
						27		28						
						29		30						
						31		32						
						33		34						
						35		36						
						37		38						
						39		40						
						41		42						
SUB - TOTAL	4640	3720	3720								14780	13780	14950	SUB - TOTAL

WATTS PER PHASE A 18,890 B 17,500 C 17,970
TOTAL WATTS 65,232
AVERAGE AMPS 78.51
ESTIMATED SPARE @ 20% 10,872
AIC 45,000 A

PANEL "PL1"

LOCATION: PUMPHOUSE (MECHANIC, ROOM)
MOUNTING: WALL-MOUNTED
VOLTAGE 480/277 3Ø, 4W
TYPE OF MAINS 150 A M.BKR/M.L.O.
FEEDER 4-2/0, 1#6 GND

DESCRIPTION	WATTAGE ØA	ØB	ØC	BKR AMP	POLE	CKT	A B C	CKT	POLE	BKR AMP	WATTAGE ØA	ØB	ØC	DESCRIPTION
SPARE				20	1	1		2	1	20				SPARE
						3		4						
						5		6						
						7		8						
						9		10						
						11		12						
						13		14			8000			TRANSFORMER
						15		16	3	50		8000		"X-3"
						17		18					8000	FOR FUTURE USE
						19		20						
				30	3	21		22						
						23		24						
						25		26						
						27		28						
						29		30						
						31		32						
						33		34						
						35		36						
						37		38						
						39		40						
						41		42						
SUB - TOTAL											8000	8000	8000	SUB - TOTAL

WATTS PER PHASE A 8000 B 8000 C 8000
TOTAL WATTS 24,000
AVERAGE AMPS 28.9
45 KAIC

PANEL _____

LOCATION: _____
MOUNTING: _____
VOLTAGE _____ 3Ø, 4W
TYPE OF MAINS _____ A M.BKR/M.L.O.
FEEDER _____

DESCRIPTION	WATTAGE ØA	ØB	ØC	BKR AMP	POLE	CKT	A B C	CKT	POLE	BKR AMP	WATTAGE ØA	ØB	ØC	DESCRIPTION
						1		2						
						3		4						
						5		6						
						7		8						
						9		10						
						11		12						
						13		14						
						15		16						
						17		18						
						19		20						
						21		22						
						23		24						
						25		26						
						27		28						
						29		30						
						31		32						
						33		34						
						35		36						
						37		38						
						39		40						
						41		42						
SUB - TOTAL														SUB - TOTAL

WATTS PER PHASE A _____ B _____ C _____
TOTAL WATTS _____
AVERAGE AMPS _____

PANEL "PH"

LOCATION: PUMP HOUSE
MOUNTING: WALL MOUNTED
VOLTAGE 120/240 1Ø, 3W
TYPE OF MAINS 100 A M.BKR/M.L.O.
FEEDER 3-1/0; 1#6 GND.

DESCRIPTION	WATTAGE ØA	ØB	ØC	BKR AMP	POLE	CKT	A B	CKT	POLE	BKR AMP	WATTAGE ØA	ØB	ØC	DESCRIPTION
PHOTO CELL CONTROL CONTACTOR A	180			15	1	1		2	1	15	00			AC SPRINKLER CONTROLLER
PHOTO CELL CONTROL CONTACTOR B		180		15	1	3		4	1	15		100		ISLAND SPRINKLER CONTROLLER
ISLAND SPOT LIGHTS	300			20	1	5		6	1	15	—			SPARE (2)
PUMPHOUSE INTERIOR LTG (3)		1100		20	1	7		8	1	20		1200		PUMPHOUSE INTERIOR LTG
PUMPHOUSE EXTERIOR LTG	285			15	1	9		10	1	15	500			PUMPHOUSE RECEPTACLE
ISLAND SPOT LTGS CONTROL	50			20	1	11		12	1	20				SPARE
SPARE						13		14	1	20	1300			MANHOLE RECEPTACLE
						15		16	1	20		—		SPARE
						17		18	2	20		—		SPARE
SPARE				30	1	19		20				—		
						21		22	1	40		—		SPARE
						23		24				—		
						25		26				—		
SPACE						27		28				—		SPACE
						29		30						
						31		32						
						33		34						
						35		36						
						37		38						
						39		40						
						41		42						
SUB - TOTAL	765	1430									3100	1300		SUB - TOTAL

WATTS PER PHASE A 2865 B 2730
TOTAL WATTS 6714
AVERAGE AMPS 14
ESTIMATED SPARE @ 20% 1119
AIC 10,000 A

PANEL _____

LOCATION: _____
MOUNTING: _____
VOLTAGE _____ 3Ø, 4W
TYPE OF MAINS _____ A M.BKR/M.L.O.
FEEDER _____

DESCRIPTION	WATTAGE ØA	ØB	ØC	BKR AMP	POLE	CKT	A B C	CKT	POLE	BKR AMP	WATTAGE ØA	ØB	ØC	DESCRIPTION
						1		2						
						3		4						
						5		6						
						7		8						
						9		10						
						11		12						
						13		14						
						15		16						
						17		18						
						19		20						
						21		22						
						23		24						
						25		26						
						27		28						
						29		30						
						31		32						
						33		34						
						35		36						
						37		38						
						39		40						
						41		42						
SUB - TOTAL														SUB - TOTAL

WATTS PER PHASE A _____ B _____ C _____
TOTAL WATTS _____
AVERAGE AMPS _____

PANEL _____

LOCATION: _____
MOUNTING: _____
VOLTAGE _____ Ø, W
TYPE OF MAINS _____ A M.BKR/M.L.O.
FEEDER _____

DESCRIPTION	WATTAGE ØA	ØB	ØC	BKR AMP	POLE	CKT	A B	CKT	POLE	BKR AMP	WATTAGE ØA	ØB	ØC	DESCRIPTION
				15	1	1		2	1	15				
						3		4						
						5		6						
						7		8						
						9		10						
						11		12						
						13		14						
						15		16						
						17		18						
						19		20						
						21		22						
						23		24						
						25		26						
						27		28						
						29		30						
						31		32						
						33		34						
						35		36						
						37		38						
						39		40						
						41		42						
SUB - TOTAL														SUB - TOTAL

WATTS PER PHASE A _____ B _____
TOTAL WATTS _____
AVERAGE AMPS _____

RECORD DRAWING

REV.	DATE	BY	SUB.	APP.	DESCRIPTION
5	5/12/94	EM	DMA	GMC	NO REVISIONS INDICATED ON CMF'S AS-BUILT MARKUP'S RECEIVED 5-11-94
4	11/1/93	JH	GAH	GMC	REVISED PER B201-CN-72

REV.	DATE	BY	SUB.	APP.	DESCRIPTION
3	8/26/93	JH	DMA	GMC	ADDED PER B201-CN-55.01
2	8/18/93	JH	DMA	GMC	REVISED PER B201-CN-55.01
1	6/16/93	JH	NA	GMC	GENERAL REV. PER B201-CN-55.01

THE PREPARATION OF THIS DRAWING HAS BEEN FINANCED IN PART THROUGH A GRANT FROM THE U. S. DEPARTMENT OF TRANSPORTATION, URBAN MASS TRANSPORTATION ADMINISTRATION, UNDER THE URBAN MASS TRANSPORTATION ACT OF 1964, AS AMENDED, AND IN PART BY THE TAXES OF THE CITIZENS OF LOS ANGELES COUNTY AND OF THE STATE OF CALIFORNIA

DESIGNED BY H. Lucero
DRAWN BY K. ILASZ
CHECKED BY K. Cedrun
IN CHARGE L. Smith
DATE 8/31/90

REGISTERED PROFESSIONAL ENGINEER PHILLIP S. HEDENE No. 14851 EXP. 6-30-94 ELECTRICAL STATE OF CALIFORNIA

Rail Construction Corporation
A Subsidiary of the Los Angeles County Transportation Commission
METRO RED LINE

SUBMITTED Phillip S. Hedene
METRO RAIL TRANSIT CONSULTANTS DMJM/PBQD/KE/HWA
APPROVED

LA CBD TO NORTH HOLLYWOOD
WILSHIRE/ALVARADO WILSHIRE/VERMONT
PUMP HOUSE
PANEL SCHEDULES

CONTRACT NO. B 201
DRAWING NO. E-210 REV. 5
SCALE NO SCALE
SHEET NO. 326

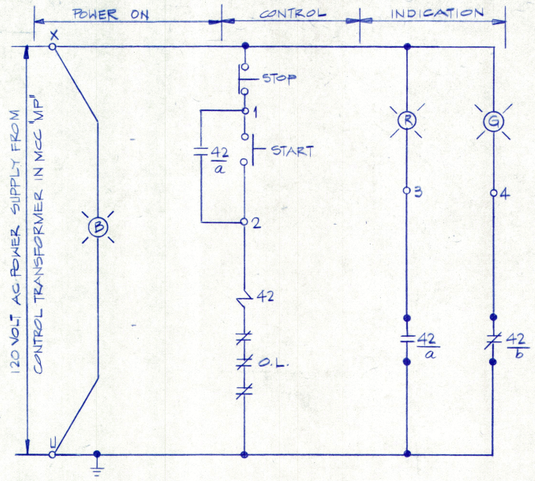

NOTE:

1. 3-POSITION SELECTOR SWITCH COMPLETE WITH KEY OPERATOR. KEY SHALL BE ABLE TO BE WITHDRAWN AT ANY POSITION.

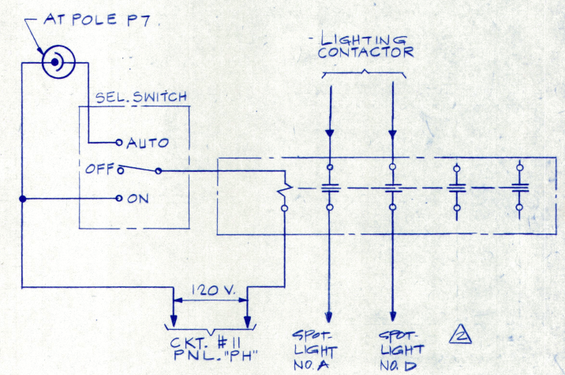

WD-A1 BLOWER NO.1

SIMILAR FOR DRAIN PUMP AND BLOWER NO. 2

ISLAND SPOTLIGHT LTG. CONTROL

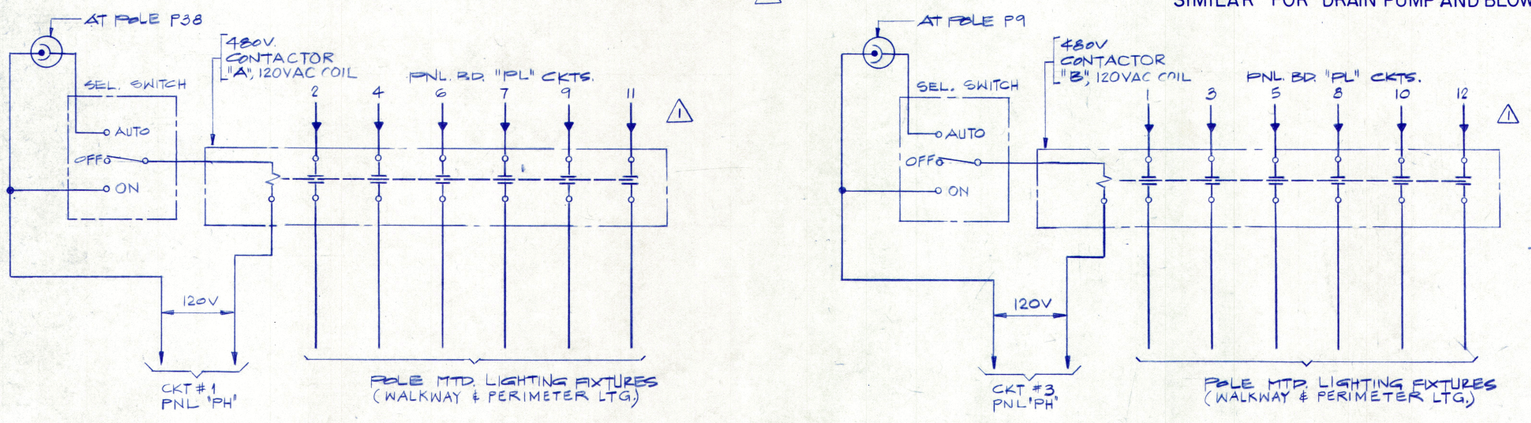

WD-Y1 WALKWAYS LTG. CONTROL

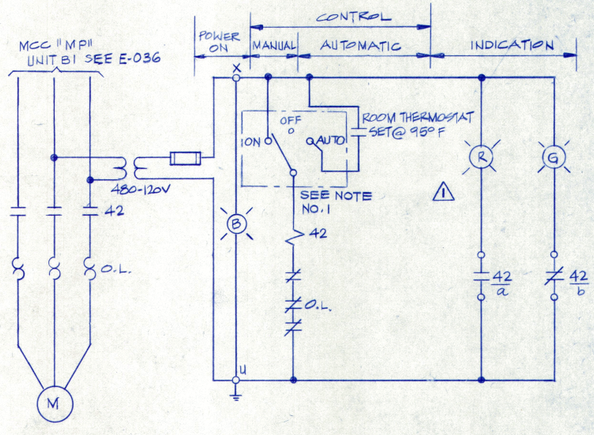

WD-A2 EXHAUST FAN EF-1

RECORD DRAWING

REV	DATE	BY	SUB	APP	DESCRIPTION

THE PREPARATION OF THIS DRAWING HAS BEEN FINANCED IN PART THROUGH A GRANT FROM THE U.S. DEPARTMENT OF TRANSPORTATION, URBAN MASS TRANSPORTATION ADMINISTRATION, UNDER THE URBAN MASS TRANSPORTATION ACT OF 1964, AS AMENDED, AND IN PART BY THE TAXES OF THE CITIZENS OF LOS ANGELES COUNTY AND OF THE STATE OF CALIFORNIA.

REV	DATE	BY	SUB	APP	DESCRIPTION
3	5/12/94	EM	MA	GMC	NO REVISIONS INDICATED ON CM'S AS-BUILT MARKUPS RECEIVED 5-11-94
2	8/24/93	[illegible]	[illegible]	GMC	ADDED PER B201-CN-55.01
1	5/6/93	[illegible]	[illegible]	GMC	REVISED PER B201-CN-55.01

DESIGNED BY A. Limsica
DRAWN BY K. ILASZ
CHECKED BY P. S. Kedrne
IN CHARGE A. Smith
DATE 8/31/90

REGISTERED PROFESSIONAL ENGINEER PHILIP S. HEDRINE No. 485 EXP. 6-30-94 ELECTRICAL STATE OF CALIFORNIA

a Subsidiary of the Los Angeles County Transportation Commission

Rail Construction Corporation
METRO RED LINE

SUBMITTED Philip S. Kedrne

METRO RAIL TRANSIT CONSULTANTS
DMJM/PBQD/KE/HWA
APPROVED [signature]

LA CBD TO NORTH HOLLYWOOD
WILSHIRE/ALVARADO WILSHIRE/VERMONT
ELEMENTARY WIRING DIAGRAM

CONTRACT NO B 201
DRAWING NO E-211
REV 3
SCALE NO SCALE
SHEET NO 327

156839

(6-4-93)

CONTRACT B201

ELECTRICAL SPECIFICATION
FOR
FOUNTAIN LIGHTING AND PUMP SYSTEMS

1. GENERAL

1.1 THE FOUNTAIN LIGHTING AND PUMP SYSTEMS SHALL CONSISTS OF:

A. FOUNTAIN CONCRETE PAD

B. FOUNTAIN SUBMERSIBLE LIGHTING FIXTURES

C. FOUNTAIN SUBMERSIBLE JUNCTION BOX HOUSING

D. FOUNTAIN SYSTEM GROUNDING

E. FOUNTAIN LIGHTING FIXTURES

F. SUBMERSIBLE WETWELL LIGHTING FIXTURES ASSEMBLY

G. WETWELL SYSTEM GROUNDING

H. FOUNTAIN LIGHTING AND PUMP CONTROLS

2. EXECUTION

2.1 UNLESS OTHERWISE INDICATED, THE FOLLOWING SHALL BE PROVIDED AND INSTALLED AT THE FOUNTAIN AREA:

A. FOUNTAIN CONCRETE PAD

THE FOUNTAIN CONCRETE PAD SHALL BE PROVIDED AS PER DESIGN SHOWN IN THE CIVIL DRAWING.

B. FOUNTAIN SUBMERSIBLE LIGHTING FIXTURES.

1. THIRTY U.L. LISTED FOUNTAIN SUBMERSIBLE LIGHTING FIXTURES: PEM FOUNTAIN CO. OR EQUAL(ALL FIXTURES RATED 120 VOLTS/W/CLEAR LENS/ROCK GUARD/THERMAL/CUT-OFF/MOUNTING YOKE W/LOCK WASHERS/ 4000 HR LAMP/SPECIAL LENGTH CORDS):

a. (15)LIGHTS W/500W, PAR56, MOGUL END PRONG, NSP LAMP:

(4) E500A-UL/C/-10/(07)/B-7 W/25 FT. CORD LENGTH.

(6) E500A-UL/C/-10/(07)/B-7 W/17 FT. CORD LENGTH.

(4) E500A-UL/C/-10/(07)/B-7 W/11 FT. CORD LENGTH.

b. (15)LIGHTS 1000W, PAR 64, MOGL END SOCKET, NSP LAMP:

(5) E1000A-UL/C/-10/(07)/B-7 W/25 FT. CORD LENGTH.

(6) E1000A-UL/C/-10/(07)/B-7 W/17 FT. CORD LENGTH.

(4) E1000A-UL/C/-10/(07)/B-7 W/11 FT. CORD LENGTH.

2. FIXTURES SHALL BE INSTALLED WITH SUFFICIENT FREE CORD LENGTH (3 FT. MINIMUM) TO ALLOW FOR RE-LAMPING FROM SERVICE BOAT OUTSIDE OF BARRIER RING, ALSO, TO ALLOW FOR RISING OF J-BOX HOUSING FOR SERVICING. REFER TO LIGHTING FIXTURE SCHEDULE ON DRAWING E-301 FOR SPECIFIC FIXTURE WATTAGE AND CORD LENGTH LOCATION.

3. FIXTURE CORDS SHALL BE PLACED IN PROVIDED 1-½" ∅ X 18" S.S. CORD PROTECTIVE SLEEVES. NEATLY BUNDLE AND SECURE CORDS WITH NYLON TIES AT BOTH ENDS OF EACH SLEEVE. UTILIZE FLEXIBLE FEATURE OF SLEEVE DURING INSTALLATION TO PROVIDE MAXIMUM CORD PROTECTION FROM ANTICIPATED CONTINUOUS TURBULENCE AND BUFFETING.

4. SET AND SECURE LIGHTING FIXTURES. 1000 WATT (10.25"∅) SET VERTICAL; 500 WATT (10.75"∅) SET INWARD 20° FROM VERTICAL. SET FIXTURES 2" BELOW REFERENCE STATIC LAKE WATER LEVEL (255.2) WHICH SHALL COINCIDE WITH REFERENCE CENTERLINE OF 12"∅ BARRIER RING.

C. FOUNTAIN SUBMERSIBLE JUNCTION BOX HOUSING:

1. TWO CUSTOM FABRICATED FOUNTAIN SUBMERSIBLE JUNCTION BOX HOUSING W/HEIGHT ADJUSTABLE DRY BOX PROVISION & RISER ASSEMBLIES SHALL INCLUDE (2) PEM FOUNTAIN CO. OR EQUAL SUBMERSIBLE BRONZE JUNCTION BOX W/1-½" N.P.T. BOTTOM CONDUIT ENTRY (PROVIDE MAXIMUM SPACING BETWEEN CORD SEALS) PEM FOUNTAIN CO. MODEL J6M OR EQUAL. (1) BOX SHALL BE FITTED WITH(3/4/1/2) PEM ½" N.P.T. # J-14 OR EQUAL BRASS CORD SEAL.

2. USE 1-½" ∅ X 36" BRASS NIPPLE (CITY OF L.A. APPROVED FOR SUBMERSIBLE ELECTRICAL CONDUIT APPLICATION) AND 1-½" THREADED BRASS COUPLING. BRAZE BRASS ANCHOR AND STOPPER PROVISION W/INTEGRAL BONDING LUG AS DETAILED ON THE DRAWING. USE TEFLON PASTE OR TAPE ON ALL THREADED CONNECTIONS FOR WATERTIGHT INTEGRITY.

3. TEST SYSTEM CONTINUITY BEFORE POTTING. BLOCK-OFF CONDUIT ENTRY TO PREVENT DRAINING/WASTING POTTING MATERIAL BEFORE CURE. USE 3-M (2114) OR EQUAL NON-CONDUCTIVE RE-ENTERABLE SEALING COMPOUND TO COMPLETELY COVER AND ENCAPSULATE ALL CONDUCTOR WIRES AND CONNECTORS WITHIN.

4. (2) 18"∅ CUSTOM FABRICATED STAINLESS STEEL 300 SERIES HOUSING SHALL BE PROVIDED W/24"∅ SECURED COVER AS DETAILED ON THE DRAWING (HOUSING TO BE RAISED ABOVE WATER LEVEL FOR DRY ACCESS SERVICING TO JUNCTION BOX WITHOUT LOWERING LAKE LEVEL).

5. (2) 6"∅ X 108" STEEL PIPE SHALL BE FITTED WITH INTEGRAL SERVICE SUPPORT PROVISION AS SHOWN ON THE DRAWING. INTERIOR/EXTERIOR SURFACES SHALL BE SAND BLASTED PRIOR TO RECEIVING DOUBLE-DIP HOT GALVANIZED COATING. EACH APPLICATION SHALL BE KEPT FREE OF EXCESSIVE BUILD-UP. PROVIDE A MINIMUM COAT COVERAGE OF 2.0 OZ./SQ. FT. CENTER AND PLUMB VERTICAL 1-½" CONDUIT AND FILL 6" PIPE W/CONCRETE FREE OF VOIDS.

6. PROVIDE (3) 1-½" ∅ SCHEDULE 80 P.V.C. ELECTRICAL CONDUIT RUNS. USE ONLY LONG SWEEP ELBOWS. DO NOT EXCEED EQUIVALENT OF 360° ACCUMULATED BENDS ON ANY CONDUIT RUN. LOCATE AND CAP 1-½" (SPARE) P.V.C. CONDUIT, AS SHOWN ON DRAWING. ALL CONDUITS SHALL BE PRESSURE TESTED WHILE STILL ACCESSIBLE. PROVIDE AND DEMONSTRATE A 20# COMPRESSED AIR TEST FOR TWO HOURS WITHOUT LOSS.

7. TWO FOUNTAIN SUBMERSIBLE JUNCTION BOX HOUSINGS SHALL BE FABRICATED AND INSTALLED AS DETAILED ON DRAWINGS.

D. FOUNTAIN SYSTEM GROUNDING

1. ALL ELECTRICAL AND METALLIC NON-ELECTRICAL COMPONENTS AND ASSEMBLIES FOR THE FOUNTAIN SYSTEM SHALL BE BONDED AND/OR GROUNDED IN ACCORDANCE WITH THE N.E.C. SECTION 680.

2. PROVIDE 3/4"∅ X 10 FT. COPPER GROUNDING ROD. LOCATE AS SHOWN ON DRAWING.

3. PROVIDE MINIMUM #8 BARE SOLID COPPER GROUND WIRE TO COMPLETE ALL BONDING. PROTECT WIRE BY RUNNING CONCRETE.

4. PROVIDE BRONZE BONDING LUGS AND CLAMPS WITH STAINLESS STEEL FASTENERS SUITABLE FOR THE APPLICATION.

5. BOND (1) SUPPORT LEG OF 20"∅ RING ASSEMBLY @ BOTTOM PLATE LUG PROVISION TO GROUND ROD.

6. BOND NOZZLE RISER @ BOTTOM FLANGE LUG PROVISION TO GROUNDING ROD.

7. (TYPICAL 2) BOND @ 1-½"∅ X 36" BRASS NIPPLE STOPPER LUG PROVISION TO GROUNDING ROD. ROUTE GROUND WIRE THROUGH 6"∅ PIPE CONCRETE.

8. (TYPICAL 2) BOND @ 6"∅ PIPE LUG PROVISION TO GROUNDING ROD.

9. PROVIDE INTERCONNECTING BONDING BETWEEN 10 FT. GROUND ROD AND GROUND MAT #4/0 BARE COPPER WIRE. SEE ELECTRICAL DRAWING E-021.

E. FOUNTAIN LIGHTING FIXTURES

1. FOUNTAIN LIGHTING CIRCUITS AND WIRING REQUIREMENTS

a. (30) FOUNTAIN LIGHTING FIXTURES SHALL BE WIRED TO OPERATE AS (15) 20 AMP CIRCUITS. EACH CIRCUIT TO OPERATE (1) 500 WATT AND (1) 1000 WATT FIXTURE. REFER TO LIGHTING FIXTURE SCHEDULE ON DRAWING FOR JUNCTION BOX DESIGNATION.

b. EACH LIGHTING CIRCUIT SHALL HAVE DEDICATED HOT AND NEUTRAL CONDUCTOR (DO NOT USE COMMON NEUTRAL). USE TYPE THWN INSULATED WIRE FOR EACH CONDUCTOR. EACH LIGHTING 20 AMP CIRCUIT SHALL HAVE G.F.C.I. CIRCUIT BREAKER.

c. BOTH 1-½" CONDUIT RUNS AND RESPECTIVE FOUNTAIN SUBMERSIBLE JUNCTION BOXES SHALL BE CIRCUIT GROUND PROTECTED BY A CONTINUOUS UNBROKEN #8 SOLID BARE COPPER GROUND WIRE FROM THE ELECTRICAL PANEL CONTAINING G.F.C.I. DEVICES.

2. FOUNTAIN LIGHTING CIRCUIT IDENTIFICATION

CKT	FIXTURE NUMBER	J-BOX DESIGNATION	# OF CONDUCTOR
LCK1	L24, L25	SJB-1	2
LCK2	L26, L27	SJB-1	2
LCK3	L28, L29	SJB-1	2
LCK4	L30, L1	SJB-1	2
LCK5	L2, L3	SJB-1	2
LCK6	L4, L5	SJB-1	2
LCK7	L6, L7	SJB-1	2
LCK8	L8, L9	SJB-1	2
LCK1 THRU LCK8	16 FIXTURES	SJB-1 W/(1)1-½" CONDUIT	(16) #10 & (1)#8 GRND.
LCK9	L10, L11	SJB-2	2
LCK10	L12, L13	SJB-2	2
LCK11	L14, L15	SJB-2	2
LCK12	L16, L17	SJB-2	2
LCK13	L18, L19	SJB-2	2
LCK14	L20, L21	SJB-2	2
LCK15	L22, L23	SJB-2	2
LCK9 THRU LCK15	14 FIXTURES	SJB-2 W/(1)1-½" CONDUIT	(14) #10 & (1) #8 GRND.

F. SUBMERSIBLE WETWELL LIGHTING FIXTURES ASSEMBLY

(2) SUBMERSIBLE WETWELL LIGHTING FIXTURE ASSEMBLY. SHALL CONSIST OF PEM FOUNTAIN CO. MODEL E100 OR EQUAL BRONZE GLOBE SUBMERSIBLE FIXTURE (100W/120V) W/½" BOTTOM CONDUIT ENTRY. PROVIDE ½"∅ X (APPROX. 16") BRASS NIPPLE (N.P.T.) W/BRAZED ANCHOR PROVISION. PROVIDE PEM FOUNTAIN CO. MODEL J10 OR EQUAL BRONZE JUNCTION BOX W/½" BOTTOM CONDUIT ENTRY AND (1) ½" SIDE CONDUIT ENTRY PROVISION. SECURE CEILING MOUNT LIGHT FIXTURE TO CONDUIT, MORTAR IN PLACE, SECURE JUNCTION BOX AND GROUT VOID UNDER BOX. ALLOW SUFFICIENT NIPPLE LENGTH TO PREVENT BOTTOMING WHEN SECURING BOX. USE BRASS OR EVERDUR CONDUIT TO GASKETED WALL SWITCH OR SECONDARY BOX LOCATION. USE TEFLON PASTE OR TAPE ON ALL THREADED CONNECTIONS. PROVIDE SINGLE WALL SWITCH CONTROL AT LADDER LOCATION. PROVIDE G.F.C.I. PROTECTION TO LIGHTING CIRCUIT. PROVIDE BONDING (EXTERNAL GROUND) PROVISION AT BOTH ASSEMBLY LOCATIONS. REFER TO DRAWING FOR PUMP HOUSE PLAN AND DETAILS / EQUIP. LAYOUT FOR INSTALLATION LOCATIONS.

G. WETWELL SYSTEM GROUNDING

1. ALL ELECTRICAL AND METALLIC NON-ELECTRICAL COMPONENTS AND ASSEMBLIES FOR THE WETWELL SYSTEM SHALL BE BONDED AND/OR GROUNDED IN ACCORDANCE WITH THE N.E.C. SECTION 680.

2. PROVIDE MINIMUM #8 BARE SOLID COPPER GROUND WIRE TO COMPLETE ALL BONDING TO GROUND MAT #4/0 BARE COPPER WIRE. SEE ELECTRICAL DRAWING E-021.

3. PROVIDE BRONZE BONDING LUGS AND CLAMPS WITH STAINLESS STEEL FASTENERS SUITABLE FOR THE APPLICATION.

4. BOND (1) 100 H.P. FOUNTAIN PUMP @ PUMP BASE BONDING PROVISION.

5. BOND (1) 16" FOUNTAIN DISCHARGE PIPE @ 16" BUTTER FLY VALVE FLANGE LOCATION.

6. BOND (1) 3" SUMP PUMP DISCHARGE PIPING @ WALL PENETRATION LOCATION.

7. BOND (1) 2 H.P. SUMP PUMP @ PUMP LOCATION.

8. BOND (TYPICAL 2) WET WELL LIGHTING FIXTURE @ BRONZE JUNCTION BOX PROVISION.

9. BOND (1) SLUICE GATE ASSEMBLY @ BASE OF PEDESTAL LIFT CRANK.

10. BOND (1) STAINLESS STEEL STRAINER SCREEN AND SUPPORT ASSEMBLY AT 2" X 2" VERTICAL ANGLE.

11. BOND (TYPICAL 2) WATER LEVEL SENSOR LOCATION @ 12"∅ BRASS SUPPORT PLAT PROVISION.

12. BOND (1) 3/4" INTERCONNECTING EQUALIZER PIPING (SERVING LIGHTING LOW-WATER SENSOR ASSEMBLY). PROVIDE PIPE CLAMP PROVISION.

13. BOND (TYPICAL 2) HOSE BIB(S). PROVIDE PIPE CLAMP PROVISION.

14. BOND (1) SLUICE GATE THIMBLE @ 30"∅ PIPE FLANGE LOCATION.

15. BOND ALL METALLIC ELECTRICAL BOXES AND CONDUITS SEE DRAWING E-021.

H. FOUNTAIN LIGHTING AND PUMP CONTROLS

1. ELECTRICAL LOW-WATER SENSOR AND SAFETY SHUT-OFF SYSTEMS

a. FOUNTAIN PUMP LOW-WATER SENSOR ASSEMBLY SHALL CONSIST OF FOUNTAIN SALES MODEL NO. WLC-C-50 OR EQUAL STAINLESS STEEL AND COPPER WATER LEVEL LOW VOLTAGE SENSOR HOUSING W/½" CONDUIT ENTRY. PROVIDE (1) ¼" X 12"∅ S.S. MOUNTING PLATE W/FLEXIBLE CONDUIT STOP FEATURE AND ANCHORING PROVISION, (1) ½"∅ X 2" BRASS NIPPLE, (2) 3/4" X ½" BRONZE BELL REDUCER, (1) 3/4"∅ X 60" BRASS NIPPLE, (1) PEM FOUNTAIN CO. MODEL J-14 OR EQUAL BRASS CORD SEAL AND 9' LENGTH 18/2 SUBMERSIBLE SJ/ST CABLE. CONNECT CABLE TO WALL MOUNTED GASKETED ELECTRICAL BOX AND RUN DEDICATED LOW VOLTAGE CONDUIT/WIRING TO CONTROL PANEL. REFER TO DRAWING FOR MECHANICAL DETAILS AND INSTALLATION REQUIREMENTS. PROVIDE BONDING (EXTERNAL GROUND) AT MOUNTING PLATE PROVISION.

b. FOUNTAIN LIGHTING LOW-WATER SENSOR ASSEMBLY SHALL CONSIST OF FOUNTAIN SALES MODEL NO. WLC-C-50 OR EQUAL STAINLESS STEEL AND COPPER WATER LEVEL LOW VOLTAGE SENSOR HOUSING W/½" CONDUIT ENTRY. PROVIDE (1) ¼" X 12" ∅ S.S. MOUNTING PLATE W/FLEXIBLE CONDUIT STOP FEATURE, 1/8"∅ EQUALIZER HOLE AND ANCHORING PROVISIONS, (1) ½"∅ X 2" BRASS NIPPLE, (2) 3/4" X ½" BRONZE BELL REDUCER, (1) 3/4"∅ X 18" BRASS NIPPLE, (1) PEM FOUNTAIN CO. MODEL J-14 OR EQUAL BRASS CORD SEAL AND 7' LENGTH 18/2 SUBMERSIBLE SJ/ST CABLE. CONNECT CABLE TO WALL MOUNTED GASKETED ELECTRICAL BOX AND RUN DEDICATED LOW VOLTAGE CONDUIT/WIRING TO CONTROL PANEL. REFER TO DRAWING FOR MECHANICAL DETAILS AND INSTALLATION REQUIREMENTS. PROVIDE BONDING (EXTERNAL GROUND) AT MOUNTING PLATE PROVISION.

2. FOUNTAIN LIGHTING PHOTO-CELL CONTROL SWITCH

a. PHOTO-CELL SHALL FUNCTION AS CONTROL SWITCH FOR FOUNTAIN LIGHTING. OPERATION SHALL BE SECONDARY TO 4 ADDITIONAL AUTOMATIC CONTROLS:

1. IT SHALL NOT OPERATE WHEN THE FOUNTAIN TIME CLOCK CONTROLLER IS IN THE OFF MODE (IT SHALL FUNCTION INDEPENDENT OF THE FOUNTAIN PUMP ON/AUTO/OFF MANUAL CONTROL SWITCH).

2. IT SHALL NOT OPERATE WHEN THE FOUNTAIN PUMP LOW-WATER LEVEL SENSOR SYSTEM IS FUNCTIONING IN THE SAFETY-OFF MODE.

3. IT SHALL NOT OPERATE WHEN THE FOUNTAIN LIGHTING LOW-WATER LEVEL SENSOR SYSTEM IS FUNCTIONING IN THE SAFETY-OFF MODE

4. IT SHALL NOT OPERATE WHEN THE FOUNTAIN PUMP WIND MONITOR AND CONTROL SYSTEM IS FUNCTIONING IN THE SAFETY-OFF MODE.

b. PROVIDE INDUSTRIAL GRADE PHOTO-CELL W/INTEGRAL TIME DELAYED SWITCHING PARAGON ELECTRIC CO. INC. OR EQUAL AND MOUNT ON LIGHTING POLE P-10, SEE DRAWING E-206. PROVIDE DEDICATED WIRING/CONDUIT TO FOUNTAIN ELECTRICAL CONTROL PANEL. REFER TO DRAWING DETAILING MODIFIED MOUNTING.

c. PHOTO-CELL TO BE WIRED TO CODED TERMINAL STRIP OF FOUNTAIN ELECTRICAL CONTROL CENTER.

d. A SEPARATE FOUNTAIN LIGHTING MANUAL LOCK-OUT SWITCH SHALL BE PROVIDED TO "KILL" ALL FOUNTAIN LIGHTING CIRCUITS DURING PERIODS OF LIGHTING SYSTEM SERVICE AND PREVENT ANY AUTOMATIC AND/OR ACCIDENTAL ACTIVATION. FOUNTAIN ELECTRICAL CONTROL CENTER SHALL HAVE SAFETY KEY-LOCK FEATURE.

3. FOUNTAIN WIND MONITOR AND CONTROL SYSTEM

a. PROVIDE PEM FOUNTAIN CO. WIND CONTROL MODEL NO. Q117 OR EQUAL. COMPUTER/MICRO PROCESSOR TO MEASURE AND MONITOR WIND VELOCITY. TRANSDUCER 3-CUP PROPELLER TYPE W/DUAL STAGE CONTROL. SHALL PROVIDE SAFETY-OFF FUNCTION TO FOUNTAIN PUMP OPERATION. PROVIDE TIME DELAY FEATURE TO LIMIT PUMP START UP TO SIX CYCLES PER HOUR.

b. LOCATE TRANSDUCER AT VANDAL-PROOF LOCATION. MOUNT ON LIGHTING POLE P-8, SEE DRAWING E-206. PROVIDE DEDICATED WIRING/CONDUIT TO FOUNTAIN ELECTRICAL CONTROL PANEL. REFER TO DRAWING DETAILING MODIFIED MOUNTING.

c. RECOMMENDED MAXIMUM RUN OF 3/4" P.V.C. CONDUIT (STAY CLEAR OF BALLASTS/TRANSFORMERS) IS 1000 FT. USE (3) SHIELDED #18 AWG CONDUCTORS; COLOR CODED: RED, GREEN, AND BLACK. SEPARATE GROUND IS REQUIRED. INSTALLATION SHALL BE IN ACCORDANCE WITH MANUFACTURER'S RECOMMENDATIONS AND INSTRUCTIONS.

d. WIND MONITOR TRANSDUCER TO BE WIRED TO CODED TERMINAL STRIP OF FOUNTAIN ELECTRICAL CONTROL CENTER.

e. WIND MONITOR PANEL TO BE PREWIRED IN FOUNTAIN ELECTRICAL CONTROL CENTER.

4. FOUNTAIN ELECTRICAL CONTROL CENTER / FOUNTAIN PUMP MOTOR STARTER

a. 36W" X 60H" X 15" DEEP NEMA 12 GASKET ELECTRICAL STEEL CABINET W/STEEL MOUNTING PANEL. CABINET SHALL INCLUDE KEY-LOCK FEATURE.

b. PROVIDE, INSTALL AND PRE-WIRE TO CODED TERMINAL BLOCK: (1) 24 HOUR INDUSTRIAL RATED TIME CLOCK CONTROLLER W/120V MOTOR; (1) PEM FOUNTAIN CO. MODEL Q117 OR EQUAL WIND CONTROL PANEL; (2) LOW WATER SENSOR PANEL (1-FOUNTAIN PUMP, 1-LIGHTS); PROVISION FOR PHOTO-CELL OPERATION; (15) 20 AMP - 120 V LIGHTING CIRCUIT RELAYS. PROVIDE TIME DELAY FEATURES: WIND MONITOR SYSTEM SHALL PROVIDE INTEGRAL TIME DELAY OPERATION TO LIMIT AUTOMATIC FOUNTAIN PUMP START-UP CYCLE TO SIX TIMES PER HOUR. EACH PUMP START-UP CYCLE SHALL INITIATE ALLOWABLE LIGHTING OPERATION. PROVIDE ADJUSTABLE TIME DELAY "ON" OPERATION (0-10 SECONDS) FOR EACH REQUIRED FOUNTAIN LIGHTING ELECTRICAL DISTRIBUTION LEG. (TIME CLOCK CONTROLLER AUTO-ON TRIP-SWITCH CAN BE REMOVED, ALLOWING FOR MANUAL START OF FOUNTAIN SYSTEM). SEE DRAWING ON FOUNTAIN ELECTRICAL CONTROL CENTER, LAYOUT, AND SCHEMATIC.

c. PROVIDE 480 VOLT/ 60 HZ/ 3∅ SERVICE FOR (1) 100 H.P. FOUNTAIN PUMP (DUTY MATCH FOR SOLID STATE REDUCED VOLTAGE STARTING).

d. PROVIDE G.F.C.I. CIRCUIT BREAKER PROTECTION TO ALL ∅ ELECTRICAL CIRCUITS INCLUDING THE FOLLOWING FOUNTAIN RELATED CIRCUITS:
1) (15) 120 VOLT - 20 AMP FOUNTAIN LIGHTING CIRCUITS.
2) (1) 120 VOLT - 20 AMP PUMP HOUSE WET-WELL LIGHTING CIRCUIT.
3) (1) 120 VOLT - 20 AMP FOUNTAIN ELECTRICAL CONTROL CENTER.
4) (1) 120 VOLT - 20 AMP PUMP HOUSE SERVICE DUPLEX OUTLET.
5) (4) 120 VOLT - 20 AMP (SPARE) ISLAND FTN. (CONTINGENCY LIGHTING).
6) (1) 240 VOLT - SERVICE FOR 2 H.P. SUBMERSIBLE SUMP PUMP.

I. FOUNTAIN ELECTRICAL CONDUIT

ALL ELECTRICAL WORK SHALL BE IN ACCORDANCE WITH THE N.E.C. SECTION 680.

1. (3) 1-½" NOMINAL (FOUNTAIN LIGHTING SERVICE) CONDUIT AND FITTINGS SHALL BE SCHEDULED 80 P.V.C. THREADED CONNECTIONS SHALL NOT BE PERMITTED (EXCEPT FOR SINGLE THREADED BRONZE COUPLING AT RISER LOCATION. SEAL WITH TEFLON TAPE).

2. USE ONLY LONG SWEEP ELBOWS IN ALL CONDUITS RUNS. DO NOT EXCEED EQUIVALENT OF 360° ACCUMULATED BENDS ON ANY CONDUIT HOME-RUN.

3. INSTALL AS SHOWN ON THE DRAWING ON 20' X 20' FTN. PAD PLAN AND DETAILS/EQUIP. LAYOUT AND MISCELLANEOUS DETAILS / 20' ∅ RING/APPURT.

3. TESTING

3.1 CONDUIT RUNS SHALL BE AIR PRESSURE TESTED WHILE STILL ACCESSIBLE AND CORRECTABLE. TESTS SHALL BE MADE AT PUMP HOUSE LOCATION. ELECTRICAL CONTRACTOR SHALL PROVIDE AND DEMONSTRATE A 20# COMPRESSED AIR TEST FOR TWO HOURS WITHOUT LOSS.

a. INSTALLED CONDUIT RUNS SHALL BE MAINTAINED FREE OF WATER AND DEBRIS AT ALL TIMES. DEMONSTRATE PRIOR TO 1ST. PRESSURE TEST BY USING AN AIR COMPRESSOR TO "BLOW-CLEAR" ALL CONDUITS TO ELIMINATE ALL WATER AND/OR FOREIGN MATERIAL.

b. (1ST. TEST) THREE 1-½" P.V.C. CONDUIT RUNS SHALL BE PRESSURE TESTED FOR INTEGRITY PRIOR TO COVERAGE. SPARE CONDUIT ENDS SHALL BE PERMANENTLY CAPPED FOR POSSIBLE FUTURE USE. PRIMARY CONDUITS END SHALL RECEIVE TEMPORARY CAPS TO PREVENT DEBRIS FROM ENTERING.

c. (2ND TEST) THE TWO CONDUIT RUNS INCLUDING THE VERTICAL 1-½" P.V.C./36" LONG BRASS NIPPLE RISER ASSEMBLY SHALL BE PRESSURE TESTED FOR INTEGRITY PRIOR TO CONCRETE FILLING OF 6" RISER PIPE. CONTINUE TO PREVENT FOREIGN MATERIAL FROM ENTERING

NOTE:

THE SPECIFICATION ON THIS DRAWING IS AN ABSTRACT FROM THE SPECIFICATION PROVIDED BY THE WATERLAND USA. THIS SPECIFICATION SHALL SUPPLEMENT TO DRP SPECIFICATION ON DRAWING NOL E-204.

UNLESS OTHERWISE INDICATED. THE MORE STRINGENT SECTION OF THE SPECIFICATIONS SHALL APPLY. ANY DEVIATIONS IN THE SPECIFICATIONS SHALL BE RESOLVED AND/OR APPROVED BY THE DRP AND/OR COMMISSION OR ITS DESIGNEE.

RECORD DRAWING

REV	DATE	BY	SUB	APP	DESCRIPTION
1	5/19/94	EM	MPA	Comm	NO REVISIONS INDICATED ON CM'S AS-BUILT MARKUPS RECEIVED 5-11-94
0	8/6/93	HL	EB	CM	INITIAL ISSUE PER B201-CN-55.01

THE PREPARATION OF THIS DRAWING HAS BEEN FINANCED IN PART THROUGH A GRANT FROM THE U.S. DEPARTMENT OF TRANSPORTATION, FEDERAL TRANSPORTATION ADMINISTRATION, UNDER THE URBAN MASS TRANSPORTATION ACT OF 1964, AS AMENDED, AND IN PART BY THE TAXES OF THE CITIZENS OF LOS ANGELES COUNTY AND OF THE STATE OF CALIFORNIA.

DESIGNED BY
DRAWN BY
CHECKED BY
IN CHARGE
DATE 5-6-93

REGISTERED PROFESSIONAL ENGINEER — No. 7911 Exp. 3-31-94 — ELECTRICAL — STATE OF CALIFORNIA

Rail Construction Corporation
a Subsidiary of the Los Angeles County Transportation Commission
METRO RED LINE

ENGINEERING MANAGEMENT CONSULTANT
an association of
Parsons Brinckerhoff Quade & Douglas, Inc.
Daniel, Mann, Johnson & Mendenhall
ICF-Kaiser Engineers (Calif.) Corp.
Escudero-Fribourg Architects
Jenkins Gales Martinez, Inc.
The Nettleship Group, Inc.

SUBMITTED
APPROVED

LA CBD TO NORTH HOLLYWOOD
WILSHIRE/ALVARADO WILSHIRE/VERMONT

FOUNTAIN AND LIGHTING SPECIFICATIONS

CONTRACT NO B201
DRAWING NO E-300
REV 1
SCALE NO SCALE
SHEET NO 344

154835

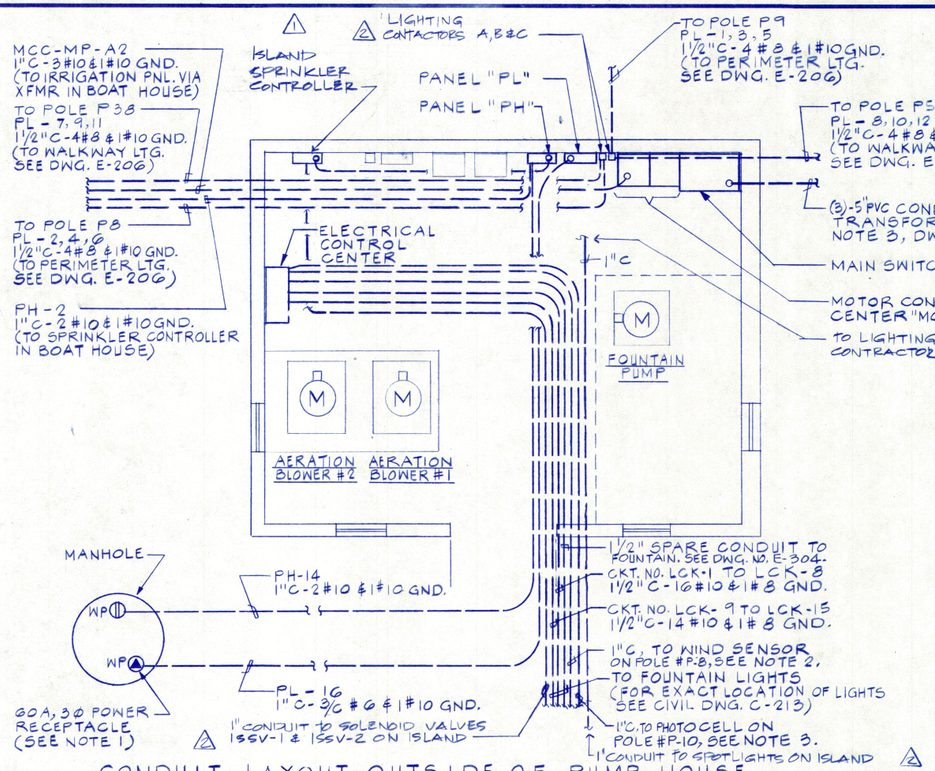

CONDUIT LAYOUT OUTSIDE OF PUMP HOUSE

N.T.S.

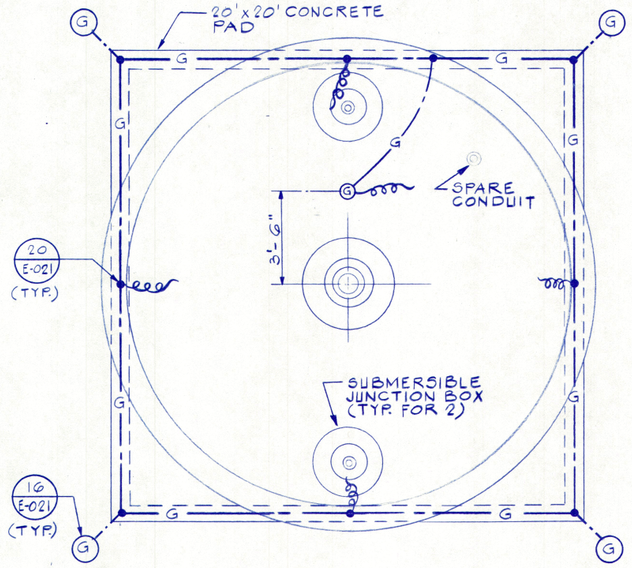

FOUNTAIN GROUNDING PLAN

(GROUNDING IN PUMP HOUSE SHALL BE IN ACCORDANCE WITH PARAGRAPH 2.2.1.D IN FOUNTAIN & LIGHTING SPECIFICATIONS ON DWG. NO. E-300)

NOTES:

1. UNLESS OTHERWISE DIRECTED BY DRP, POWER RECEPTACLE SHALL BE CROUSE-HINDS CAT. NO. NREA 6324, COMPLETE WITH NPJ PLUG, NPR CONNECTOR, NPQ MOTOR PLUG & A MINIMUM OF 100 FEET 3/C #6 & 1#10 GROUND CABLE OR EQUAL. CONTRACTOR SHALL INSTALL THE POWER RECEPTACLE IN THE MANHOLE AT THE LOCATION AS DIRECTED BY DRP. THIS POWER RECEPTACLE WILL BE USED FOR A PORTABLE PUMP 10 HP, 480 V; 3 Ø, TO BE PROVIDED BY MECHANICAL CONTRACTOR.
2. DEDICATED WIRING/CONDUIT BETWEEN ELECTRICAL CONTROL CENTER AND SENSOR.
3. DEDICATED WIRING/CONDUIT BETWEEN ELECTRICAL CONTROL CENTER AND PHOTOCELL.

FOUNTAIN LIGHTING FIXTURE IDENTIFICATION TABLE

FIXTURE NO.	500W PAR 56	1000W PAR 64	CORD LENGTH	CIRCUIT NO.	J-BOX NO.
L-1	X		11'-0"	LCK-4	SJB-1
L-2		X	11'-0"	LCK-5	
L-3	X		17'-0"		
L-4		X	17'-0"	LCK-6	
L-5	X		17'-0"		
L-6		X	25'-0"	LCK-7	
L-7	X		25'-0"		
L-8		X	25'-0"	LCK-8	
L-9	X		25'-0"		
L-10		X	25'-0"	LCK-9	SJB-2
L-11	X		17'-0"		
L-12		X	17'-0"	LCK-10	
L-13	X		17'-0"		
L-14		X	11'-0"	LCK-11	
L-15	X		11'-0"		
L-16		X	11'-0"	LCK-12	
L-17	X		11'-0"		
L-18		X	17'-0"	LCK-13	
L-19	X		17'-0"		
L-20		X	17'-0"	LCK-14	
L-21	X		25'-0"		
L-22		X	25'-0"	LCK-15	
L-23	X		25'-0"		
L-24		X	25'-0"	LCK-1	SJB-1
L-25	X		25'-0"		
L-26		X	17'-0"	LCK-2	
L-27	X		17'-0"		
L-28		X	17'-0"	LCK-3	
L-29	X		11'-0"		
L-30		X	11'-0"	LCK-4	

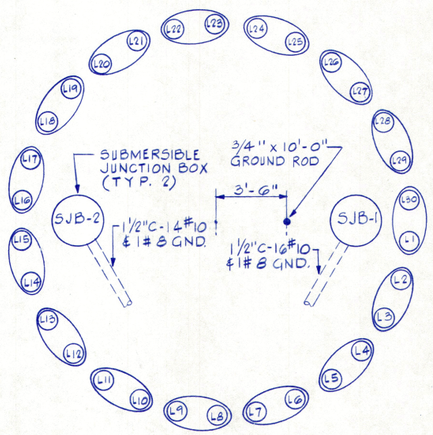

FOUNTAIN LIGHTING FIXTURE IDENTIFICATION AND LOCATION

N.T.S. (SEE NOTE 2 ON DWG. NO. E-207)

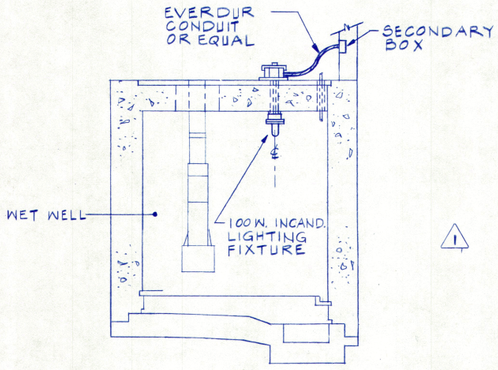

SECTION A/E-301 E-209

N.T.S.

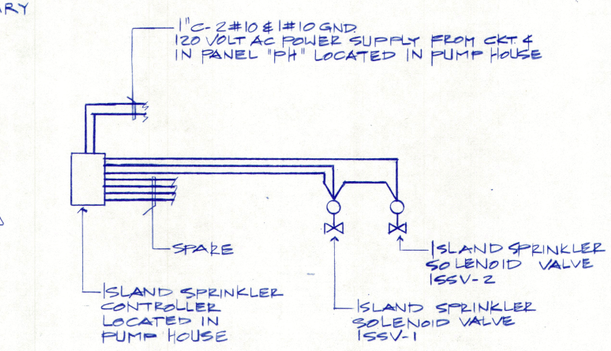

ISLAND SPRINKLER SOLENOID WIRING DIAGRAM

N.T.S.

RECORD DRAWING

REV	DATE	BY	SUB	APP	DESCRIPTION
3	5/12/94	EM	IDA	Grace	NO REVISIONS INDICATED ON CM'S AS-BUILT MARKUPS RECEIVED 5-11-94
2	9/24/93	HL	GTH	Grace	ADDED PER B201-CN-55.01
1	8/18/93	HL	GTH	Grace	REVISED PER B201-CN-55.01
0	5/6/93	HL	HG	Grace	INITIAL ISSUE PER B201-CN-55.01

THE PREPARATION OF THIS DRAWING HAS BEEN FINANCED IN PART THROUGH A GRANT FROM THE U.S. DEPARTMENT OF TRANSPORTATION, URBAN MASS TRANSPORTATION ADMINISTRATION, UNDER THE URBAN MASS TRANSPORTATION ACT OF 1964, AS AMENDED, AND IN PART BY THE TAXES OF THE CITIZENS OF LOS ANGELES COUNTY AND OF THE STATE OF CALIFORNIA.

DESIGNED BY
DRAWN BY
CHECKED BY
IN CHARGE
DATE 5-6-93

REGISTERED PROFESSIONAL ENGINEER JOHN A. [illegible] No. 7211 Exp. 9-30-94 ELECTRICAL STATE OF CALIFORNIA

Rail Construction Corporation
A Subsidiary of The Los Angeles County Transportation Commission
METRO RED LINE

SUBMITTED

ENGINEERING MANAGEMENT CONSULTANT
an association of:
Parsons Brinckerhoff Quade & Douglas, Inc.
Daniel, Mann, Johnson & Mendenhall
ICF-Kaiser Engineers (Calif.) Corp.
Esquilero-Fribourg Architects
Jenkins Gales Martinez, Inc.
The Natkinship Group, Inc.

APPROVED

LA CBD TO NORTH HOLLYWOOD
WILSHIRE/ALVARADO TO WILSHIRE/VERMONT

PUMP HOUSE CONDUIT LAYOUT, FOUNTAIN LIGHTING AND GROUNDING DETAIL

CONTRACT NO B201
DRAWING NO E-301 REV 3
SCALE NONE
SHEET NO 345

(6-4-93)

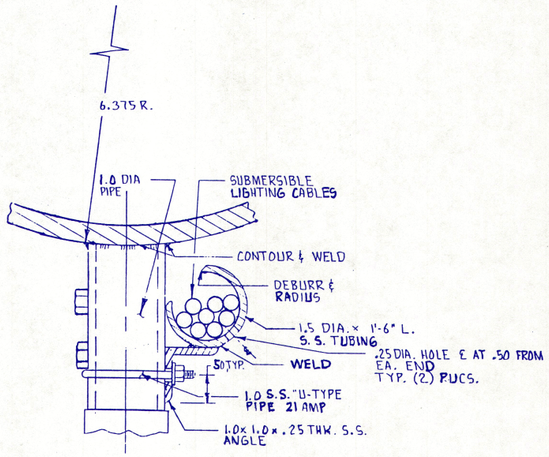

LIGHTING CORD CARRIER ASSEMBLY
TYPICAL FOR 30 PLACES
(SEE NOTE 2 ON DWG. NO. E-207)

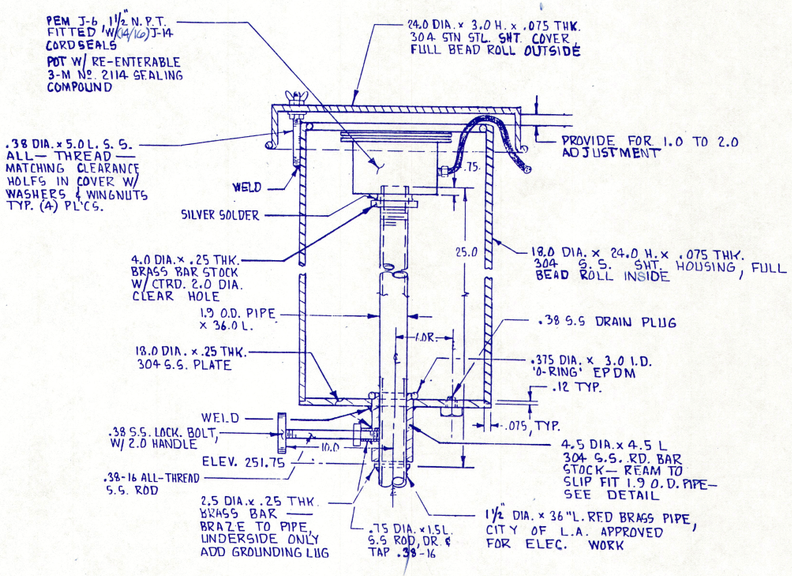

J-BOX ASSEMBLY FOR
FOUNTAIN LIGHTING
TYPICAL FOR 2 PLACES
(SEE NOTE 2 ON DWG NO. E-207)

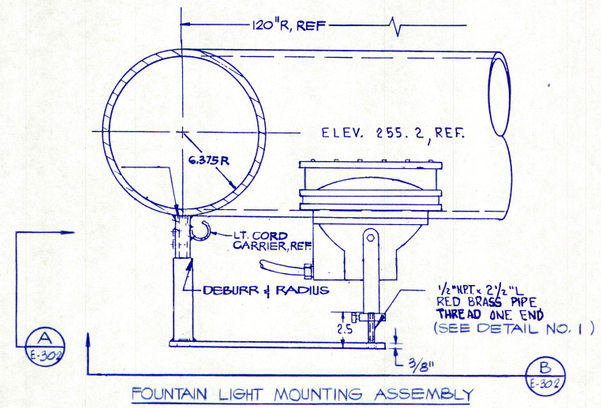

FOUNTAIN LIGHT MOUNTING ASSEMBLY

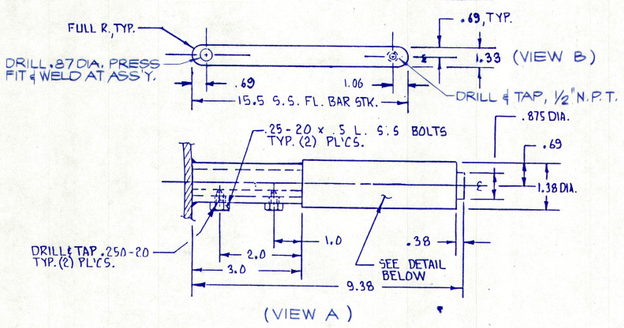

FOUNTAIN LIGHT MOUNTING ASSEMBLY DETAIL NO. 1 (A E-302) (B E-302)
TYP. (30) PLCS. (SEE NOTE 2 ON DWG. E-207)

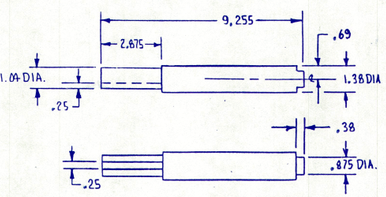

FOUNTAIN LIGHTING MOUNTING POST DETAILS NO. 2
(SEE NOTE 2 ON DWG. NO. E-207) MAT'L: 304 S.S ROUND BAR STOCK

NOTES:

1. CONNECT THE GROUND WIRE BARE TINNED 2/0 CU WITH GROUND ROD CLAMP TYPE BURNDY GKP OR EQUAL TO 4 GROUND RODS SIZED 5/8" D X 8'L AND SEAL WITH SEALER TYPE KEARNY AQUASEAL OR EQUAL.
2. EXTEND GROUND WIRES FROM A COMMON GROUND ROD INTO A HANDHOLE THROUGH A KNOCKOUT. GROUT THE HOLES WHERE WIRES PENETRATE THROUGH THE KNOCKOUT. PROVIDED MINIMUM 9 FEET EACH EXTENDED GROUND WIRES IN THE HANDHOLE.
3. COVER SHALL BE PROVIDED WITH NON-CORROSIVE FASTENING DEVICES IN ACCORDANCE WITH LADWP REQUIREMENTS. COVER SHALL BE GALVANIZED AFTER A LADWP LOGO IS BEAD WELDED IN PLACE IN ACCORDANCE WITH LADWP'S SPECIFICATION.
4. TRANSFORMER PAD SHALL BE REINFORCED CONCRETE AND SHALL MEET THE REQUIREMENTS OF LADWP SPECIFICATION NO. P-178. COPY OF THE SPECIFICATION WILL BE AVAILABLE UPON REQUEST THRU DRP.
5. UNLESS OTHERWISE INDICATED, THE CONTRACTOR SHALL PROVIDE THE TRANSFORMER PAD AND 8' HIGH MINIMUM CHAIN LINK FENCE IN THE PARK, AT THE LOCATION DIRECTED BY DRP, LADWP, AND/OR THE COMMISSION.

CHAIN LINK FENCE IS NOT REQUIRED PER RFI-381

6. NOTE NO'S 1 THRU 4 AND THE PLAN BELOW ARE ABSTRACTS FROM DWP DRAWING FOR 8'x10' PRECAST PAD WITH HAND HOLE FOR PADMOUNT TRANSFORMER.

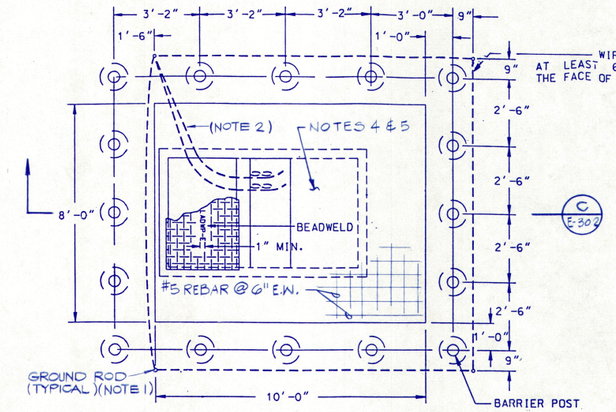

PLAN

DWP TRANSFORMER PAD
NOTE 6

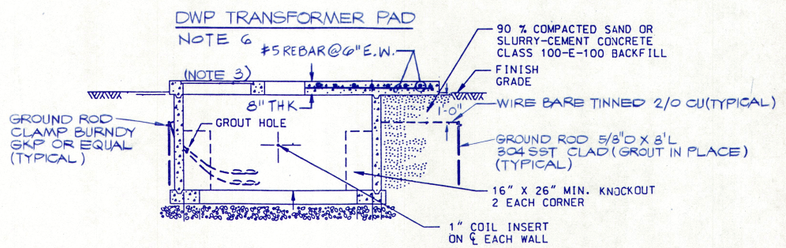

SECTION C (C E-302)
NOTE 6

RECORD DRAWING

REV	DATE	BY	SUB	APP	DESCRIPTION
A	9-28-93	RGR	NDA	GMC	REVISED PER MTA GENERAL MANAGER
					COMMENTS 5.11.94
B	5/6/93	HL	NS	GMC	INITIAL ISSUE PER B201-CN-55.01

THE PREPARATION OF THIS DRAWING HAS BEEN FINANCED IN PART THROUGH A GRANT FROM THE U.S. DEPARTMENT OF TRANSPORTATION, URBAN MASS TRANSPORTATION ADMINISTRATION, UNDER THE URBAN MASS TRANSPORTATION ACT OF 1964, AS AMENDED, AND IN PART BY THE TAXES OF THE CITIZENS OF LOS ANGELES COUNTY AND OF THE STATE OF CALIFORNIA.

DESIGNED BY J. Jardine
DRAWN BY ALAN A. JIMENEZ
CHECKED BY Joseph Thurmond
IN CHARGE Smith
DATE 5-6-93

REGISTERED PROFESSIONAL ENGINEER JUAN A. JOSE No. 7011 Exp. 9-30-94 ELECTRICAL STATE OF CALIFORNIA

Rail Construction Corporation
A Subsidiary of the Los Angeles County Transportation Commission
METRO RED LINE

SUBMITTED Juan A. Jose

ENGINEERING MANAGEMENT CONSULTANT
an association of
Parsons Brinckerhoff Quade & Douglas, Inc.
Daniel, Mann, Johnson & Mendenhall
ICF Kaiser Engineers (Calif.) Corp.
Escudero Fridsburg Architects
Jenkins Gales Martinez, Inc.
The Nattelsip Group, Inc.
APPROVED

LA CBD TO NORTH HOLLYWOOD
WILSHIRE/ALVARADO – WILSHIRE/VERMONT
LIGHTING DETAILS & DWP SUB-STATION

CONTRACT NO B201
DRAWING NO E-302
REV 1
SCALE NO SCALE
SHEET NO 346

(6-4-93)

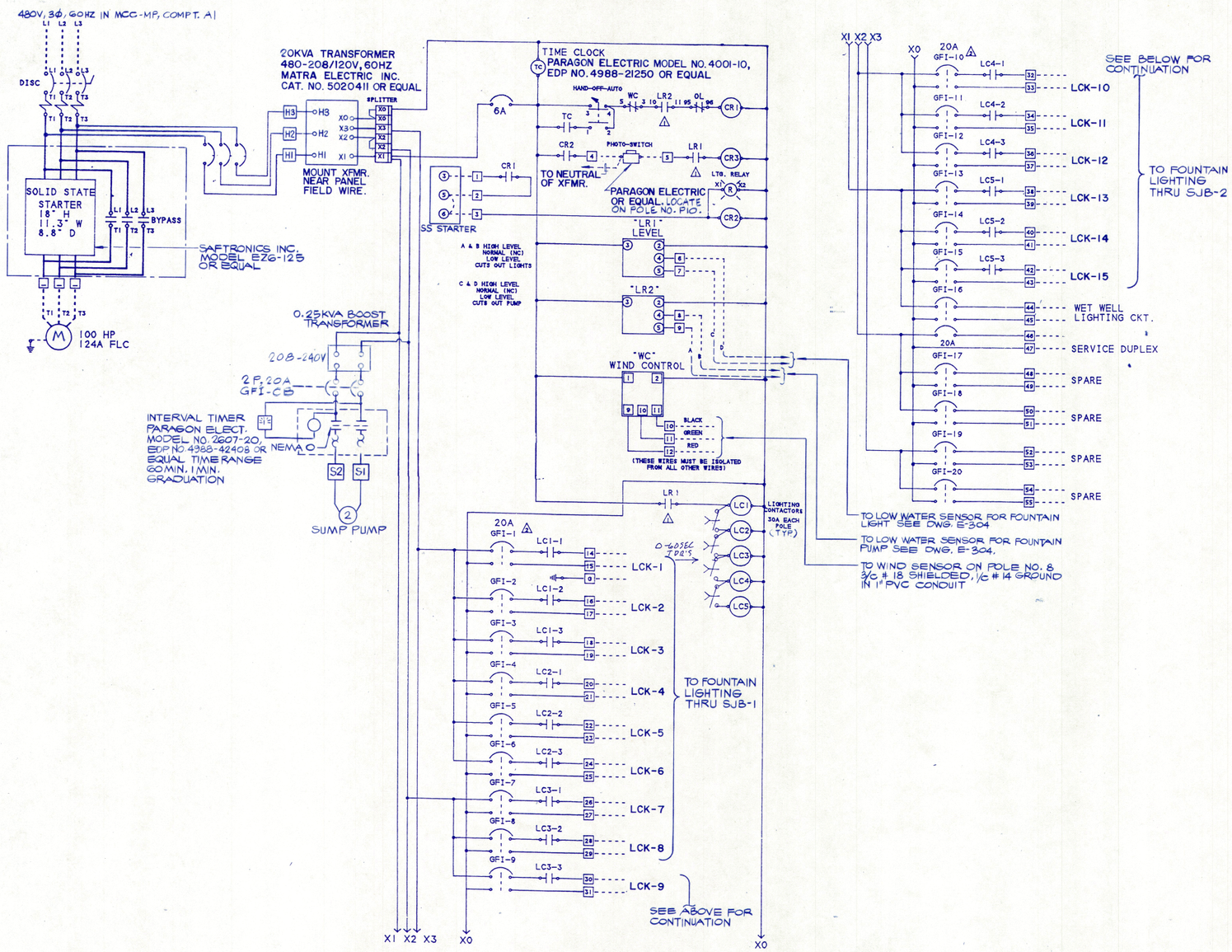

NOTES:

1. THIS CONTROLS DIAGRAM IS A CUT-OUT ABSTRACTED FROM THE DESIGN BY PACIFIC ENGINEERED PRODUCTS, INC. THRU WATERLAND USA.

RECORD DRAWING

REV	DATE	BY	SUB	APP	DESCRIPTION
1	5/12/94	EM			NO REVISIONS INDICATED ON CM'S AS-BUILT MARKUPS RECEIVED 5-11-94
0	5/6/93	[illegible]	6	[illegible]	INITIAL ISSUE PER B201-CN-55.01

THE PREPARATION OF THIS DRAWING HAS BEEN FINANCED IN PART THROUGH A GRANT FROM THE U.S. DEPARTMENT OF TRANSPORTATION, FEDERAL TRANSPORTATION ADMINISTRATION, UNDER THE URBAN MASS TRANSPORTATION ACT OF 1964, AS AMENDED, AND IN PART BY THE TAXES OF THE CITIZENS OF LOS ANGELES COUNTY AND OF THE STATE OF CALIFORNIA.

DESIGNED BY [signature]
DRAWN BY ALAN A. JIMENEZ
CHECKED BY [signature]
IN CHARGE [signature]
DATE 5-6-93

REGISTERED PROFESSIONAL ENGINEER JUAN A. JOSE No. 7311 Exp. 9-30-94 ELECTRICAL STATE OF CALIFORNIA

a Subsidiary of the Los Angeles County Transportation Commission

Rail Construction Corporation
METRO RED LINE

ENGINEERING MANAGEMENT CONSULTANT
an association of
Parsons Brinckerhoff Quade & Douglas, Inc.
Daniel, Mann, Johnson & Mendenhall
ICF-Kaiser Engineers (Calif.) Corp.
Escudero-Fribourg Architects
Jenkins Gales Martinez, Inc.
The Nettleship Group, Inc.

SUBMITTED [signature]
APPROVED [signature]

LA CBD TO NORTH HOLLYWOOD
WILSHIRE/ALVARADO WILSHIRE/VERMONT
FOUNTAIN LIGHTING & PUMP CONTROLS

CONTRACT NO B201
DRAWING NO E-303
REV 1
SCALE NO SCALE
SHEET NO 347

6-4-93

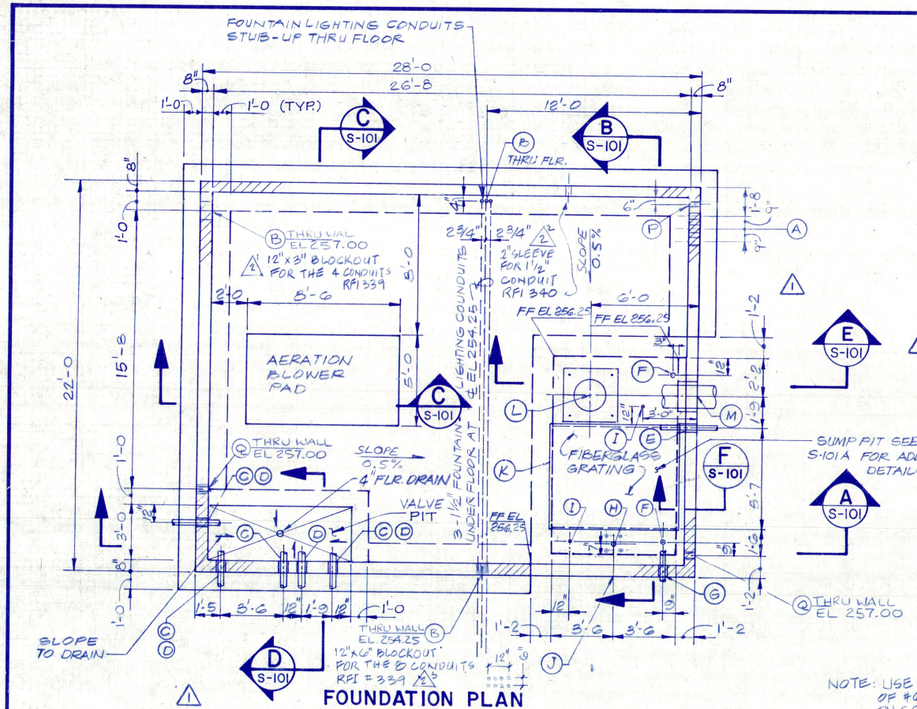

FOUNDATION PLAN

1/4" = 1'-0"

NOTES: (CON'T)

5. SEE ELECTRICAL PLANS FOR ELECTRICAL SLEEVE DETAILS
6. REFER TO DRAWING NO. SS-019B AND SPECIFICATIONS FOR PIPE SLEEVES, REINFORCEMENT, JOINTS AND BLOCK-OUTS.

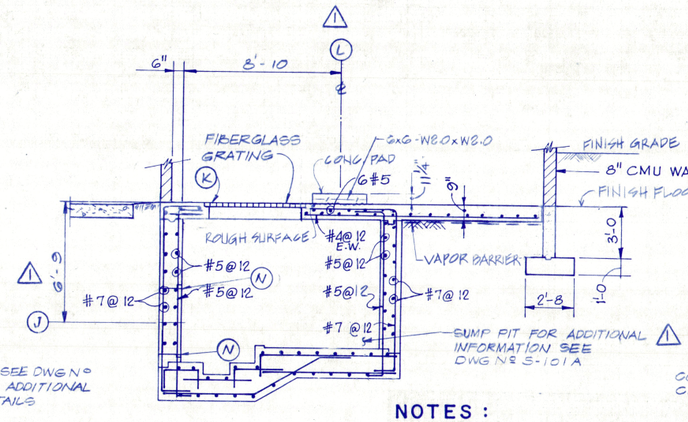

SECTION B

1/4"=1'-0 — S-101

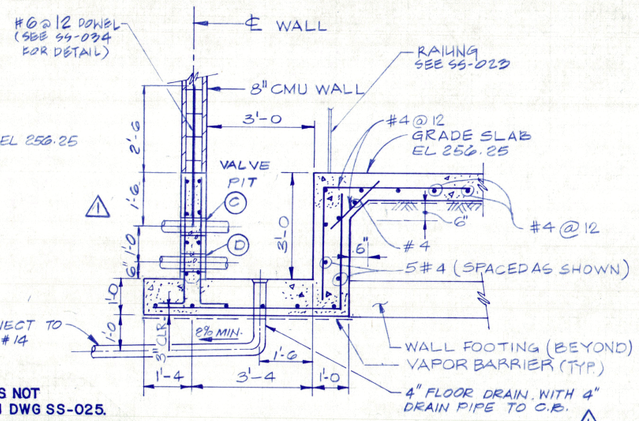

SECTION D

1/2"= 1'-0 — S-101

NOTES:

1. LADDER INDICATED FOR THE SUMP PIT IS NOT INCLUDED IN THE LADDER SCHEDULE ON DWG SS-025.
2. FOR ROOF FRAMING PLAN AND ROOF DETAILS SEE ARCHITECTURAL DRAWINGS.
3. LAP SIDE AND END JOINTS OF VAPOR BARRIER NOT LESS THAN FOUR INCHES AND SEAL WATERTIGHT.
4. VAPOR BARRIER IS PART OF SLAB ON GRADE PAYMENT.

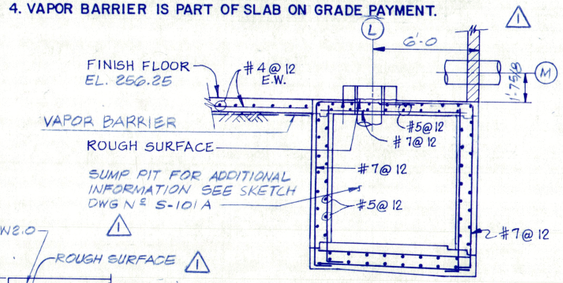

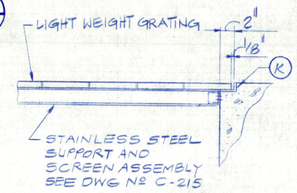

SECTION F

1"= 1'-0 — S-101

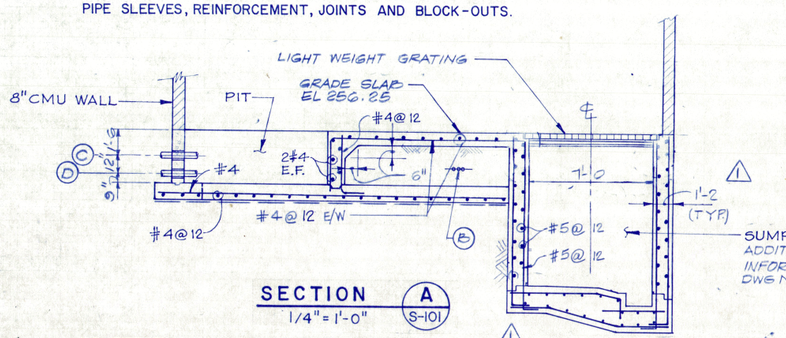

SECTION A

1/4"=1'-0" — S-101

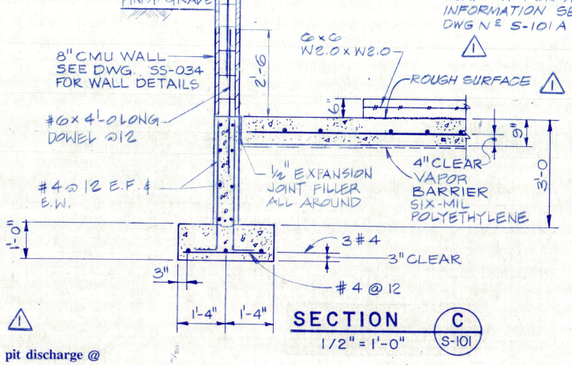

SECTION C

1/2"=1'-0" — S-101

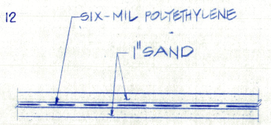

VAPOR BARRIER DETAIL

(N.T.S.)

SECTION E

1/4"=1'-0" — S-101

PENETRATION AND BLOCKOUT NOTES

(A) Provide 3-6" dia. pipe sleeves for 3-5" electrical conduits from DWP at centerline elevation 257.00. (RFI #338) 2

(B) Provide 12" x 3" rectangular block-out for electrical conduits.

(C) Provide 6" dia. pipe sleeve for 4" aeration @ centerline elevation 255.00.

(D) Provide 6" dia. pipe sleeve for 4" aeration @ centerline elevation 254.00.

(E) Provide 5" dia. pipe sleeve for 3" sump pit discharge @ centerline elevation 256.75.

(F) Provide 6" dia. pipe sleeve for 3/4" low water sensor thru floor. (wetwell ceiling)

(G) Provide 3" dia. pipe sleeve for 3/4" low water equalizer @ center line elevation 249.50.

(H) Provide 3" dia. pipe sleeve for sluice gate stem thru floor. Provide 4 anchor bolts on 9 1/2" square pattern, pour-in-place 4 each 3/4" dia. x 12" x 4" leg galv. anchor bolts.

(I) Provide 1/2" dia. by approx. 16" brass nipple with brazed anchor provision for submersible wetwell lighting thru floor (wetwell ceiling).

(J) Provide 44" x 44" block-out to accept thimble and sluice gate centered at elevation 249.50.

(K) Provide 2" width x 1 1/2" height FRP trim angle all around opening for fiberglass grating.

(L) Provide 36" square x 11 1/4" height pump base with 20" dia. thru hole, thru floor (wetwell ceiling). Provide 4 anchor bolts at 25" square pattern. Pour-in-place 4 each 1" dia. x 24" x 4" leg x 15" imbedment galv. anchor bolts.

(M) Provide 20" dia. pipe sleeve for 16" fountain pump discharge (fountain feed line) at elevation 257.88.

(N) Provide 1" x 1" block-out all around sluice gate block-out to accept elastomeric sealant.

(P) Provide 2 1/2" dia. pipe sleeve for 1 1/2" electrical conduit at elevation 258.00.

(Q) PROVIDE 6" PIPE SLEEVE FOR 4" DRAIN PIPE

REV	DATE	BY	SUB	APP	DESCRIPTION
2	5.12.94	EM	NDA	Gme	REVISED PER CBCB AS-BUILT MARKUPS RECEIVED 5.11.94
1	4.29.93	PBR	NP	Gme	B201 - C.N. - 55.01

THE PREPARATION OF THIS DRAWING HAS BEEN FINANCED IN PART THROUGH A GRANT FROM THE U.S. DEPARTMENT OF TRANSPORTATION, URBAN MASS TRANSPORTATION ADMINISTRATION, UNDER THE URBAN MASS TRANSPORTATION ACT OF 1964, AS AMENDED, AND IN PART BY THE TAXES OF THE CITIZENS OF LOS ANGELES COUNTY AND OF THE STATE OF CALIFORNIA.

DESIGNED BY B. Tirandi
DRAWN BY Susan Marquez
CHECKED BY W. J. Ormento
IN CHARGE W. J. Ormento
DATE 4 SEP 90

REGISTERED PROFESSIONAL ENGINEER WILLIAM JOSEPH ORMENTO No. 15044 Exp. 3/31/95 CIVIL STATE OF CALIFORNIA

Rail Construction Corporation
A Subsidiary of the Los Angeles County Transportation Commission
METRO RED LINE

SUBMITTED William J. Ormento

METRO RAIL TRANSIT CONSULTANTS
DMJM/PBQD/KE/HWA
APPROVED

L A CBD TO NORTH HOLLYWOOD
WILSHIRE/ALVARADO TO WILSHIRE/VERMONT

PUMP HOUSE
FOUNDATION PLAN AND SUMP DETAILS

CONTRACT NO B-201
DRAWING NO S-101 REV 2
SCALE AS NOTED
SHEET NO 329

RECORD DRAWING

6-4-93

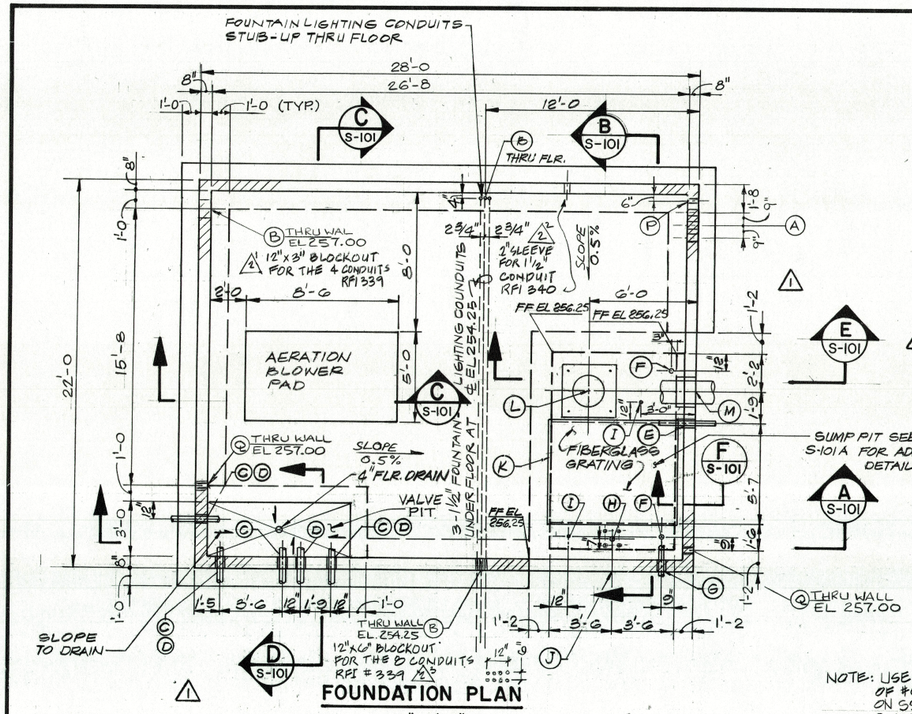

FOUNDATION PLAN

1/4" = 1'-0"

NOTES: (CON'T)

5. SEE ELECTRICAL PLANS FOR ELECTRICAL SLEEVE DETAILS
6. REFER TO DRAWING NO. SS-019B AND SPECIFICATIONS FOR PIPE SLEEVES, REINFORCEMENT, JOINTS AND BLOCK-OUTS.

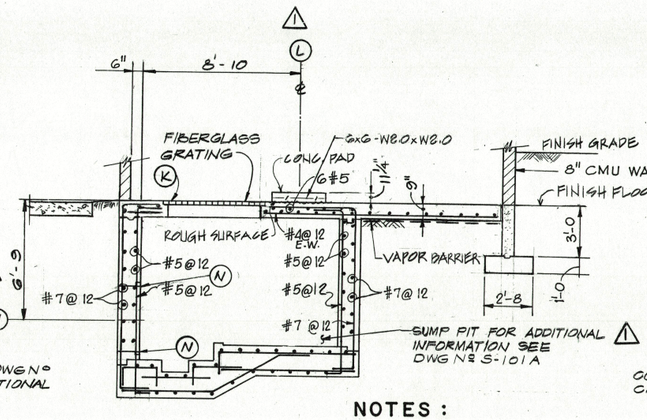

SECTION B

1/4" = 1'-0" — S-101

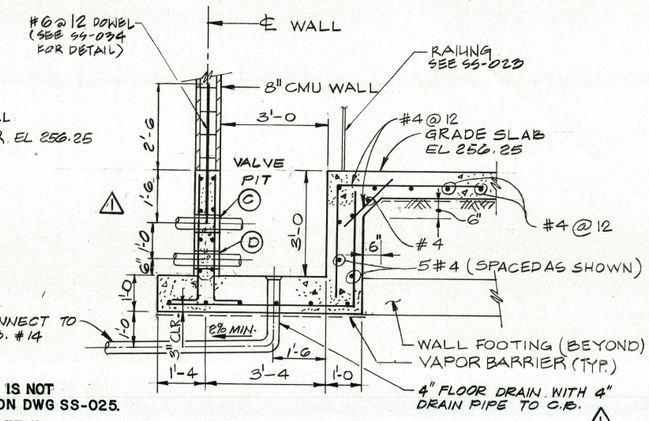

SECTION D

1/2" = 1'-0" — S-101

NOTES:

1. LADDER INDICATED FOR THE SUMP PIT IS NOT INCLUDED IN THE LADDER SCHEDULE ON DWG SS-025.
2. FOR ROOF FRAMING PLAN AND ROOF DETAILS SEE ARCHITECTURAL DRAWINGS.
3. LAP SIDE AND END JOINTS OF VAPOR BARRIER NOT LESS THAN FOUR INCHES AND SEAL WATERTIGHT.
4. VAPOR BARRIER IS PART OF SLAB ON GRADE PAYMENT.

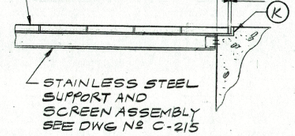

SECTION F

1" = 1'-0" — S-101

NOTE: USE #6@8 IN PLACE OF #6@24 SHOWN ON SS-034 FOR ALL C.M.U. WALLS EXCEPT NORTH WALL.

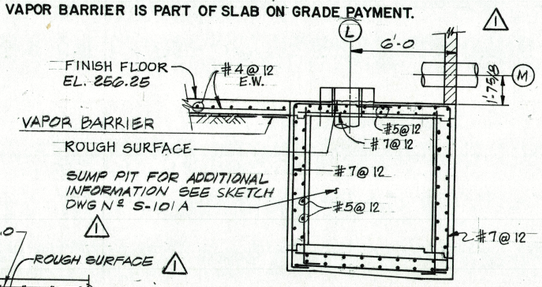

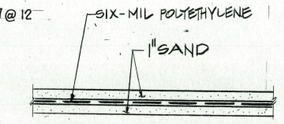

VAPOR BARRIER DETAIL

(N.T.S.)

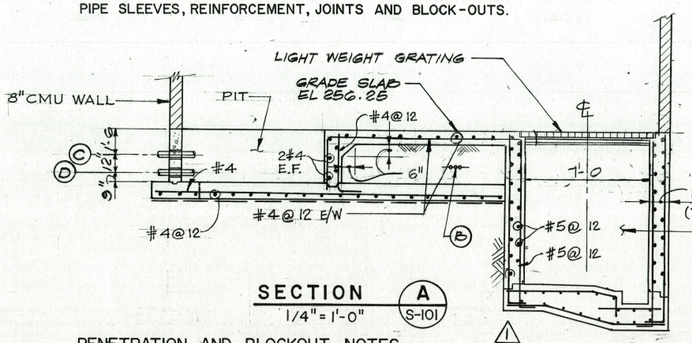

SECTION A

1/4" = 1'-0" — S-101

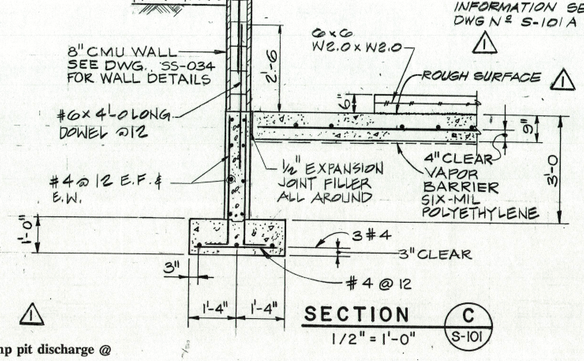

SECTION C

1/2" = 1'-0" — S-101

SECTION E

1/4" = 1'-0" — S-101

PENETRATION AND BLOCKOUT NOTES

(A) Provide 3-6" dia. pipe sleeves for 3-5" electrical conduits from DWP at centerline elevation 257.00. (RFI #338) 4

(B) Provide 12" x 3" rectangular block-out for electrical conduits.

(C) Provide 6" dia. pipe sleeve for 4" aeration @ centerline elevation 255.00.

(D) Provide 6" dia. pipe sleeve for 4" aeration @ centerline elevation 254.00.

(E) Provide 5" dia. pipe sleeve for 3" sump pit discharge @ centerline elevation 256.75.

(F) Provide 6" dia. pipe sleeve for 3/4" low water sensor thru floor. (wetwell ceiling)

(G) Provide 3" dia. pipe sleeve for 3/4" low water equalizer @ center line elevation 249.50.

(H) Provide 3" dia. pipe sleeve for sluice gate stem thru floor. Provide 4 anchor bolts on 9 1/2" square pattern, pour-in-place 4 each 3/4" dia. x 12" x 4" leg galv. anchor bolts.

(I) Provide 1/2" dia. by approx. 16" brass nipple with brazed anchor provision for submersible wetwell lighting thru floor (wetwell ceiling).

(J) Provide 44" x 44" block-out to accept thimble and sluice gate centered at elevation 249.50.

(K) Provide 2" width x 1 1/2" height FRP trim angle all around opening for fiberglass grating.

(L) Provide 36" square x 11 1/4" height pump base with 20" dia. thru hole, thru floor (wetwell ceiling). Provide 4 anchor bolts at 25" square pattern. Pour-in-place 4 each 1" dia. x 24" x 4" leg x 15" imbedment galv. anchor bolts.

(M) Provide 20" dia. pipe sleeve for 16" fountain pump discharge (fountain feed line) at elevation 257.88.

(N) Provide 1" x 1" block-out all around sluice gate block-out to accept elastomeric sealant.

(P) Provide 2 1/2" dia. pipe sleeve for 1 1/2" electrical conduit at elevation 258.00.

(Q) PROVIDE 6" PIPE SLEEVE FOR 4" DRAIN PIPE

RECORD DRAWING

REV	DATE	BY	SUB	APP	DESCRIPTION

REV	DATE	BY	SUB	APP	DESCRIPTION
N/A	3/01/95	RR	N/A	N/A	RECORD DRAWING
4	5.12.94	EM	DM	GMC	REVISED PER CM'S AS-BUILT MARKUPS RECEIVED 5/11/94
3	4.29.93	PER	NP	GMC	B201 - C.N. - 55.01

THE PREPARATION OF THIS DRAWING HAS BEEN FINANCED IN PART THROUGH A GRANT FROM THE U.S. DEPARTMENT OF TRANSPORTATION, URBAN MASS TRANSPORTATION ADMINISTRATION, UNDER THE URBAN MASS TRANSPORTATION ACT OF 1964, AS AMENDED, AND IN PART BY THE TAXES OF THE CITIZENS OF LOS ANGELES COUNTY AND OF THE STATE OF CALIFORNIA.

DESIGNED BY E. Rizaki
DRAWN BY Juan Marquez
CHECKED BY W. J. Arrmento
IN CHARGE W. J. Arrmento
DATE 4 SEP 90

REGISTERED PROFESSIONAL ENGINEER WILLIAM JOSEPH ARMENTO No. 15048 Exp. 3/31/93 CIVIL STATE OF CALIFORNIA

A Subsidiary of the Los Angeles County Transportation Commission

Rail Construction Corporation
METRO RED LINE

SUBMITTED William J. Armento

METRO RAIL TRANSIT CONSULTANTS DMJM/PBQD/KE/HWA

APPROVED

L A CBD TO NORTH HOLLYWOOD
WILSHIRE/ALVARADO TO WILSHIRE/VERMONT

PUMP HOUSE
FOUNDATION PLAN AND SUMP DETAILS

CONTRACT NO B-201
DRAWING NO S-101 REV 2
SCALE AS NOTED
SHEET NO 329

NOTES:

1. FOR STEPPED SLAB, RECESS AND OPENING REINFORCEMENT DETAILS SEE DWG. NO. SS-0198, SHEET 153.
2. REFER TO DWG. NO. S-101 FOR ADDITIONAL DETAILS OF WETWELL WALLS.
3. LEAVE 1"x1" BLOCK-OUT AT INTERSECTION OF WALL AND WETWELL FLOOR SLAB TO ACCEPT ELASTOMERIC SEALANT IN ACCORDANCE WITH SPECIFICATION 07920.
4. 44"x44" BLOCK-OUT FOR FUTURE THIMBLE AND SLUICE-GATE INSTALLATION LEAVE 1"x1" BLOCK-OUT ALL AROUND FOR ELASTOMERIC SEALANT.
5. 3/4" NOMINAL LOW WATER EQUALIZER THROUGH WALL. EQUALIZER THROUGH WALL CONFIGURATION. PROVIDE 3" PIPE SLEEVE AT ℄ EL 249.50.
6. PREPARATION- SAND BLAST ALL WETWELL SURFACES: CEILING SURFACES, VERTICAL SURFACES (INCLUDING 1'-2" LEDGE WALLS), FLOOR AND WITHIN THE CONTINUOUS (1"x1") COLD JOINT RECESS AT BASE OF WALL AND AROUND SLUICE GATE COLD JOINT RECESS. REMOVE ANY VISIBLE TIE BAR OR EXPOSED METAL MATERIALS BY GRINDING AWAY. CONTINUE GRINDING INTO CONCRETE UNTIL A 1/2" INDENT/RECESS RESULTS. PATCH VOIDS WITH HYDRAULIC CEMENT.
7. PRIOR TO APPLYING COLD JOINT SEALANT PRIME ALL COLD JOINT RECESS AREAS AND APPLY ELASTOMERIC SEALANT TO FILL RECESS IN ACCORDANCE WITH THE MANUFACTURERS INSTRUCTIONS AND SPECIFICATION 07920.
8. AFTER SEALANT HAS CURED, WASH DOWN ALL CONCRETE SURFACES WITH A CITRIC ACID IN FINAL PREPARATION FOR WATERPROOFING WETWELL SURFACES. PROVIDE TWO APPLICATIONS OF WATERPROOFING MATERIAL IN ACCORDANCE WITH SPECIFICATION 07910. APPLY WITH BRUSH AND/OR ROLLER (LIKE A PAINT) WAIT 12 HOURS BEFORE SECOND APPLICATION. FOLLOW MANUFACTURERS RECOMMENDATIONS.
9. WATERPROOFING WORK SHALL BE COMPLETED PRIOR TO INSTALLATION OF WETWELL ELECTRICAL/MECHANICAL EQUIPMENT.

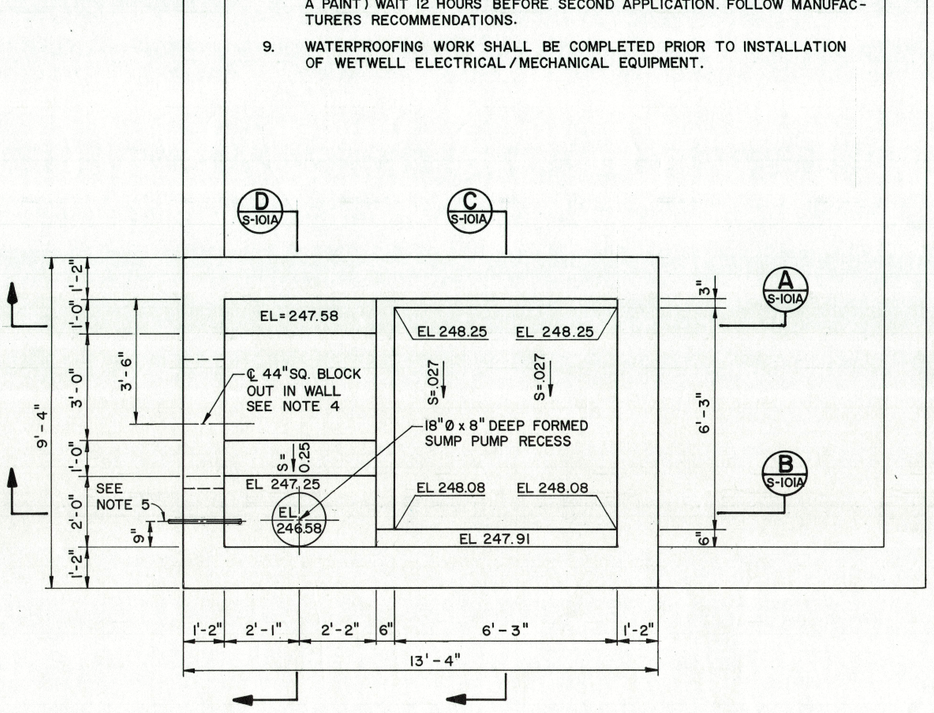

PUMPHOUSE WETWELL FLOOR PLAN

SCALE 1/2" = 1'-0"

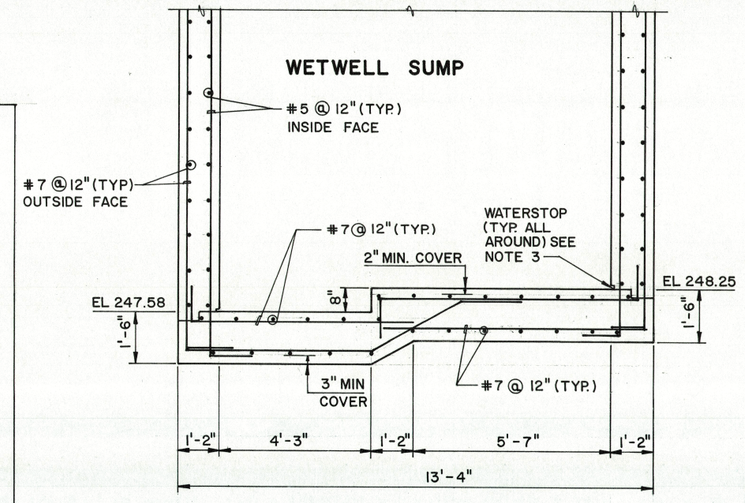

SECTION A

SCALE 1/2" = 1'-0" (S-101A)

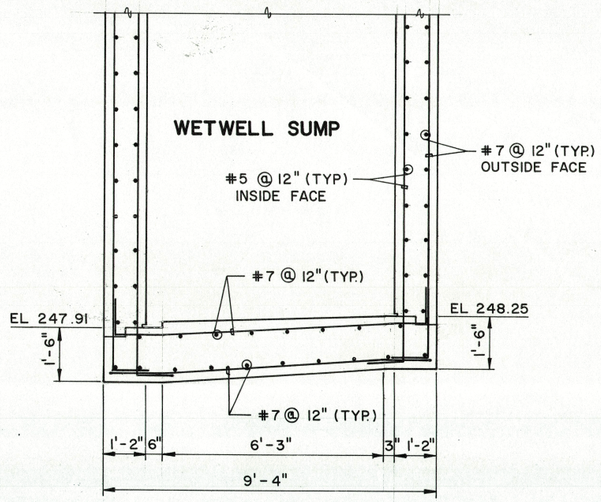

SECTION C

SCALE 1/2" = 1'-0" (S-101A)

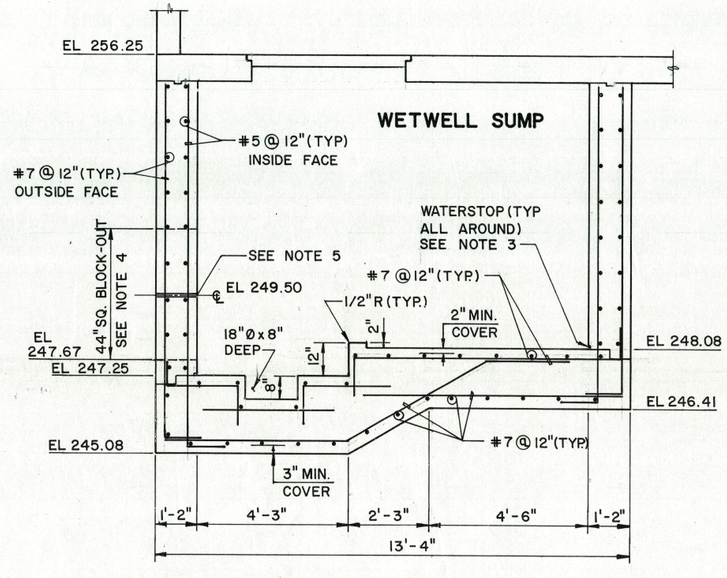

SECTION B

SCALE 1/2" = 1'-0" (S-101A)

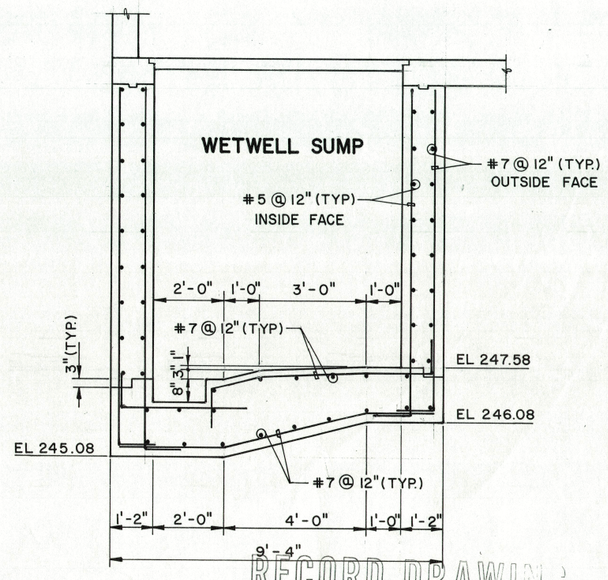

SECTION D

SCALE 1/2" = 1'-0" (S-101A)

RECORD DRAWING

REV	DATE	BY	SUB	APP	DESCRIPTION
N/A	9/01/95	RP	N/A	N/A	RECORD DRAWING
1	5/14/94	EM	100	Const	NO REVISIONS INDICATED ON CM'S AS-BUILT MARKUPS RECEIVED. 5/11/94
0	4-29-93	PER	NP	02	NEW SHEET PER DCO1-CN-55.01

THE PREPARATION OF THIS DRAWING HAS BEEN FINANCED IN PART THROUGH A GRANT FROM THE U.S. DEPARTMENT OF TRANSPORTATION, FEDERAL TRANSPORTATION ADMINISTRATION, UNDER THE URBAN MASS TRANSPORTATION ACT OF 1964, AS AMENDED, AND IN PART BY THE TAXES OF THE CITIZENS OF LOS ANGELES COUNTY AND OF THE STATE OF CALIFORNIA.

DESIGNED BY
DRAWN BY J. Gracavinta
CHECKED BY
IN CHARGE
DATE 4-29-93

REGISTERED PROFESSIONAL ENGINEER — DONALD W. LOGAN — No. 11717 — Exp 12-31-96 — CIVIL — STATE OF CALIFORNIA

Rail Construction Corporation
a Subsidiary of the Los Angeles County Transportation Commission
METRO RED LINE

ENGINEERING MANAGEMENT CONSULTANT
an association of
Parsons Brinckerhoff Quade & Douglas, Inc.
Daniel, Mann, Johnson & Mendenhall
ICF-Kaiser Engineers (Calif.) Corp.
Escudero-Fribourg Architects
Jenkins Gales Martinez, Inc.
The Nettleship Group, Inc.

SUBMITTED Donald W. Logan
APPROVED

LA CBD TO NORTH HOLLYWOOD
WILSHIRE/ALVARADO TO WILSHIRE/VERMONT

PUMPHOUSE WETWELL PLAN & SECTIONS

CONTRACT NO B201
DRAWING NO S-101A REV 1
SCALE AS NOTED
SHEET NO 329A

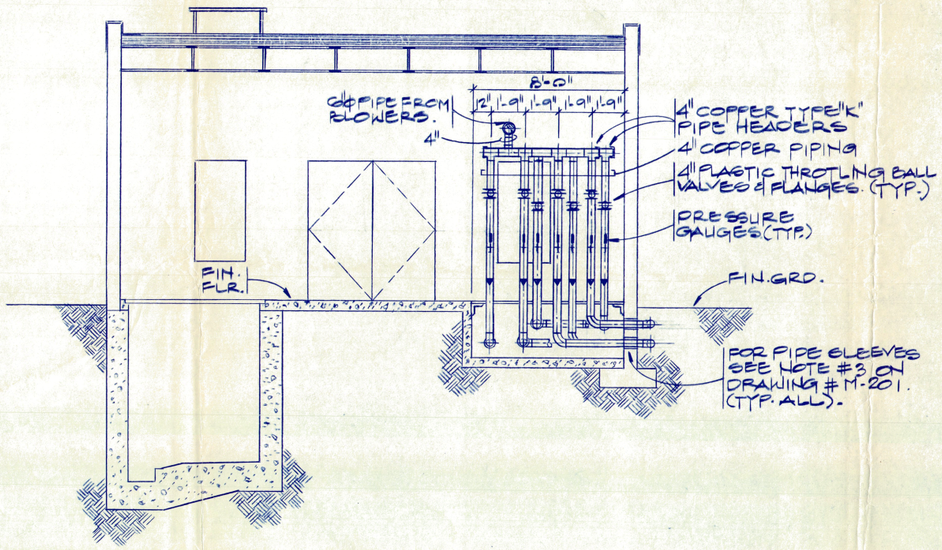

SECTION 3 M-201
(SCALE: 1/4" = 1'-0")

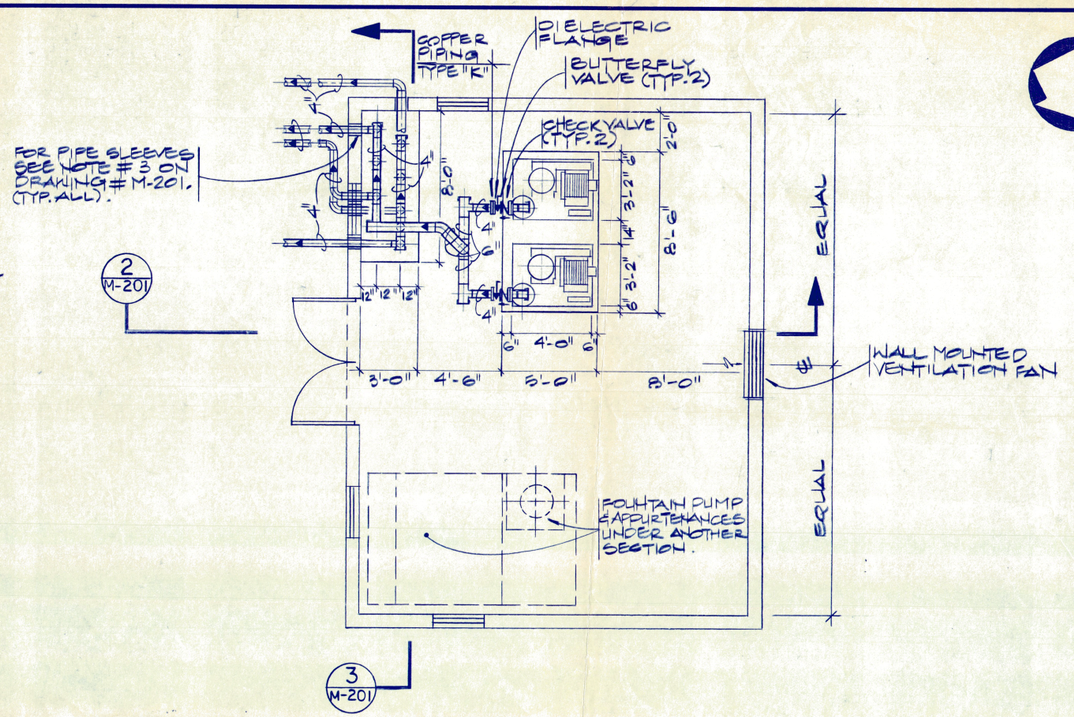

PUMP HOUSE FLOOR PLAN 1 M-201
(SCALE: 1/4" = 1'-0")

"NOTES"

1. AIR BLOWER BY ROOTS DIVISION, 6B UNIVERSAL RAI, 25 HP EACH (2 UNITS), 480 V, 3Φ, 60 Hz OR APPROVED EQUAL.
2. PROVIDE ONE (1) DIRECT DRIVEN PROPELLER FAN FOR VENTILATION OF PUMP HOUSE BUILDING, RATED @ 16,800 CFM @ 0.125 STATIC PRESSURE. FAN SHALL OPERATE @ 860 RPM, WITH 2HP MOTOR @ 480V, 3 PHASE, 60 Hz. EXHAUST FAN SHALL BE "DYNAMASTER" MODEL # FQ36L8 OR APPROVED EQUAL.
3. FOR PIPE SLEEVES THRU CONCRETE WALLS SEE SPECIFICATIONS SECTION # 15142 & DRAWING # MS-002C, (SHEET # 236), "PIPE SLEEVE FOR EXTERIOR STRUCTURAL ELEMENTS, TYPE "L".
4. PIPING LENGTH DIMENSIONS SHOWN ON "SITE PLAN" ON DRAWING # M-202 ARE APPROXIMATELY ONLY. CONTRACTOR TO ESTABLISH CORRECT DIMENSIONS IN THE FIELD.

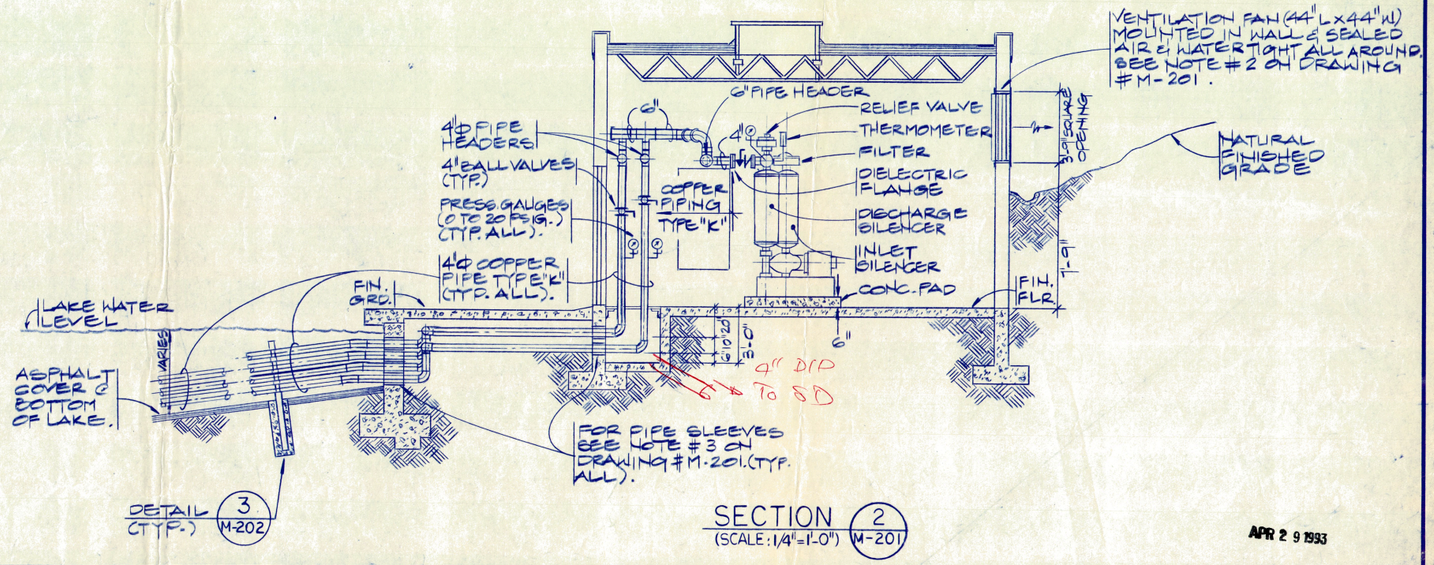

SECTION 2 M-201
(SCALE: 1/4" = 1'-0")

APR 2 9 1993

REV	DATE	BY	SUB	APP	DESCRIPTION
1	4-29-93		NP		REV. PER B-201-CN55

THE PREPARATION OF THIS DRAWING HAS BEEN FINANCED IN PART THROUGH A GRANT FROM THE U.S. DEPARTMENT OF TRANSPORTATION, URBAN MASS TRANSPORTATION ADMINISTRATION, UNDER THE URBAN MASS TRANSPORTATION ACT OF 1964, AS AMENDED, AND IN PART BY THE TAXES OF THE CITIZENS OF LOS ANGELES COUNTY AND OF THE STATE OF CALIFORNIA.

DESIGNED BY DRP & RN
DRAWN BY L DE JESUS & RN
CHECKED BY Sudhir Agrawal
IN CHARGE K. Sain
DATE 04 SEP. 90

REGISTERED PROFESSIONAL ENGINEER K.V. SAIN 22621 EXP. 6-30-92 MECHANICAL STATE OF CALIFORNIA

Rail Construction Corporation
METRO RED LINE
a Subsidiary of the Los Angeles County Transportation Commission

SUBMITTED K. Sain

METRO RAIL TRANSIT CONSULTANTS
DMJM/PBQD/KE/HWA
APPROVED

LA CBD TO NORTH HOLLYWOOD
WILSHIRE ALVARADO TO WILSHIRE VERMONT

PUMP HOUSE PLAN, SECTION & DETAIL

CONTRACT NO B-201
DRAWING NO M-201 REV 1
SCALE NONE
SHEET NO 331

137690

6-4-93

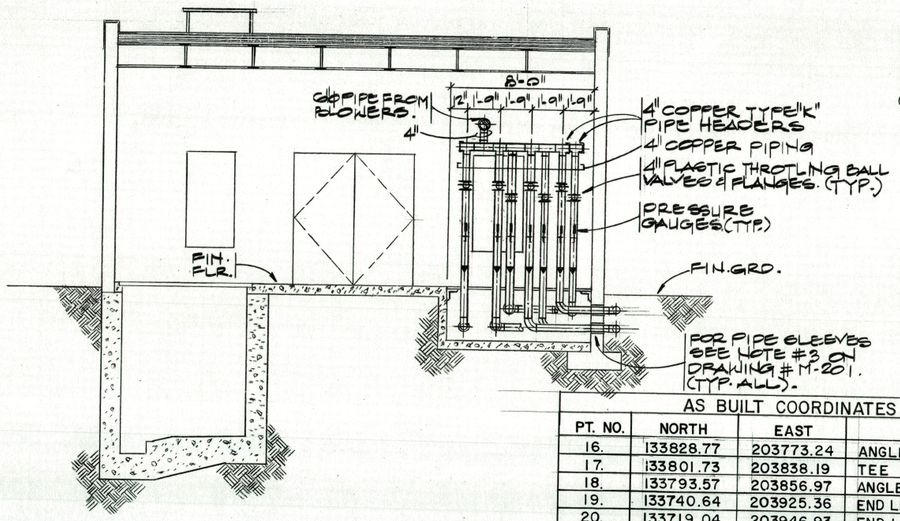

SECTION (3) (SCALE: 1/4"=1'-0") M-201

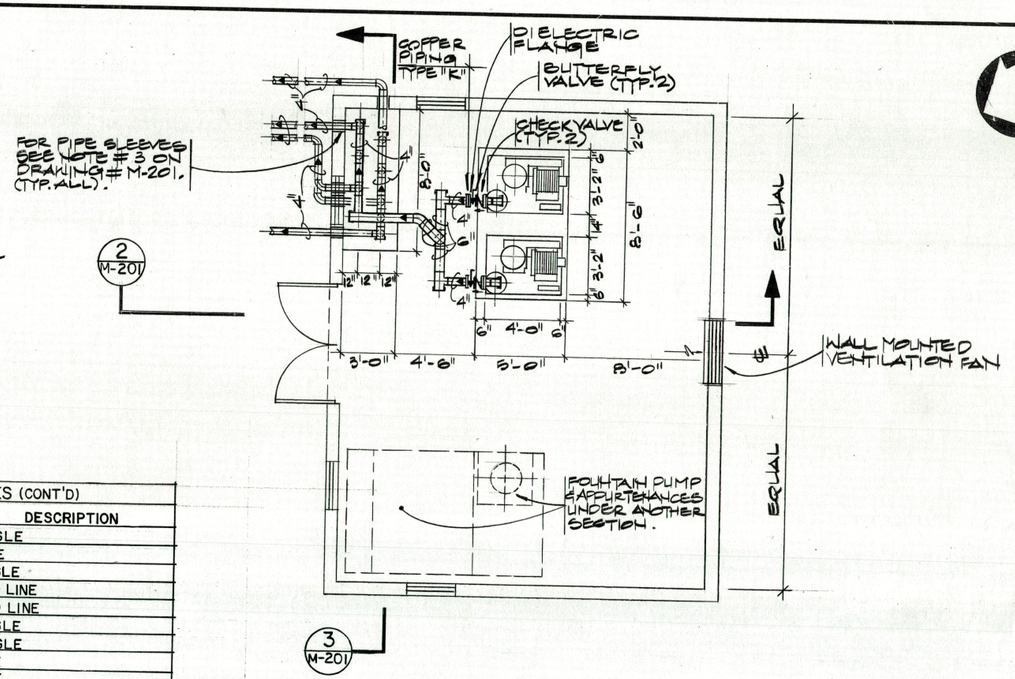

PUMP HOUSE FLOOR PLAN (1) M-201
(SCALE: 1/4" = 1'-0")

"NOTES"

1. AIR BLOWER BY ROOTS DIVISION, GB UNIVERSAL RAI 25 HP EACH (2 UNITS), 480 V, 3Ø, 60 HZ OR APPROVED EQUAL.
2. PROVIDE ONE (1) DIRECT DRIVEN PROPELLER FAN FOR VENTILATION OF PUMP HOUSE BUILDING, RATED @ 16,800 CFM @ 0.125 STATIC PRESSURE. FAN SHALL OPERATE @ 860 RPM, WITH 2HP MOTOR (480V, 3 PHASE, 60 Hz. EXHAUST FAN SHALL BE "DYNAMASTER" MODEL # FQ36L6 OR APPROVED EQUAL.
3. FOR PIPE SLEEVES THRU CONCRETE WALLS SEE SPECIFICATIONS SECTION # 15142 & DRAWING # MS-602C, (SHEET # 236), "PIPE SLEEVE FOR EXTERIOR STRUCTURAL ELEMENTS, TYPE "L".
4. PIPING LENGTH DIMENSIONS SHOWN ON SITE PLAN ON DRAWING # M-202 ARE APPROXIMATELY ONLY. CONTRACTOR TO ESTABLISH CORRECT DIMENSIONS IN THE FIELD.

△2 AS BUILT COORDINATES (SEE DWG. NO. M-202 FOR PT. NOS.)

PT. NO.	NORTH	EAST	DESCRIPTION
1.	133274.55	203716.61	COPPER LINES AT WALL
2.	133274.70	203715.07	COPPER LINES AT WALL
3.	133274.81	203713.57	COPPER LINES AT WALL
4.	133276.47	203704.11	COPPER LINES AT WALL
5.	133294.16	203718.33	COPPER LINES AT ANGLE
6.	133295.10	203717.03	COPPER LINES AT ANGLE
7.	133294.50	203715.72	COPPER LINES AT ANGLE
8.	133295.15	203715.07	COPPER LINES AT ANGLE
9.	133341.40	203735.65	ANGLE
10.	133364.33	203658.91	ANGLE
11.	133435.32	203591.20	ANGLE
12.	133570.90	203539.86	TEE
13.	133668.38	203502.80	ANGLE
14.	133759.30	203543.61	ANGLE
15.	133844.50	203661.46	ANGLE

△2 AS BUILT COORDINATES (CONT'D)

PT. NO.	NORTH	EAST	DESCRIPTION
16.	133828.77	203773.24	ANGLE
17.	133801.73	203838.19	TEE
18.	133793.57	203856.97	ANGLE
19.	133740.64	203925.36	END LINE
20.	133719.04	203946.93	END LINE
21.	133662.38	203999.22	ANGLE
22.	133582.39	203996.25	ANGLE
23.	133495.60	203903.69	TEE
24.	133442.73	203845.44	TEE
25.	133249.43	203979.93	ANGLE
26.	133262.76	204022.76	ANGLE
27.	133408.80	203984.47	END LINE
28.	133631.60	203892.56	END LINE
29.	133633.39	203807.25	ANGLE
30.	133612.28	203786.16	TEE
31.	133577.54	203750.98	ANGLE
32.	133490.87	203755.50	END LINE
33.	133412.53	203814.13	LOWER LAKE DRAIN
34.	133307.48	203710.12	UPPER LAKE DRAIN
35.	133340.88	203684.02	FOUNTAIN INTAKE
36.	133490.07	203721.01	END LINE
37.	133611.53	203689.07	TEE
38.	133734.35	203656.97	END LINE
39.	133751.97	203679.68	END LINE
40.	133702.55	203796.35	TEE
41.	133653.17	203911.67	END LINE
42.	133544.02	203812.61	CORNER FOUNTAIN SLAB
43.	133532.47	203796.53	CORNER FOUNTAIN SLAB
44.	133516.34	203808.23	CORNER FOUNTAIN SLAB
45.	133528.11	203824.30	CORNER FOUNTAIN SLAB

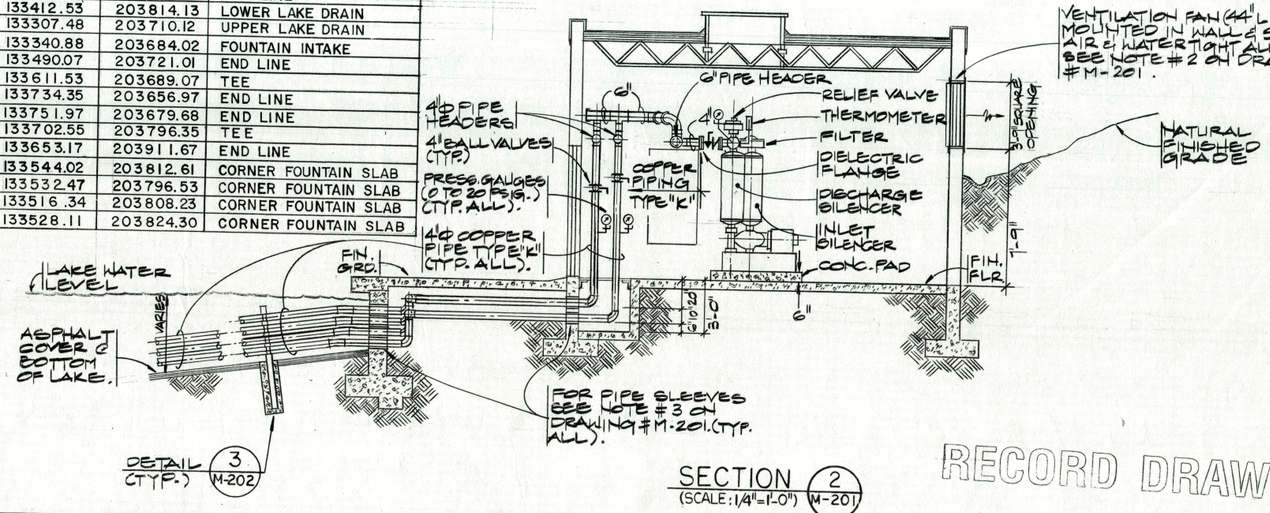

SECTION (2) (SCALE: 1/4"=1'-0") M-201

RECORD DRAWING

REV	DATE	BY	SUB	APP	DESCRIPTION
NA	8/01/95	RR	N/A	N/A	RECORD DRAWING
2	5.12.94	RGR	9/DA	Gmc	ADDED TABLE OF COORDINATES FROM DWG. NO. M-202
1	4-29-93	JK	NP	Gmc	REVISED PER P-201-CH 55.01
					NO REVISIONS INDICATED ON CM'S AS-BUILT MARKUPS RECEIVED. 5/11/94.

THE PREPARATION OF THIS DRAWING HAS BEEN FINANCED IN PART THROUGH A GRANT FROM THE U.S. DEPARTMENT OF TRANSPORTATION, URBAN MASS TRANSPORTATION ADMINISTRATION, UNDER THE URBAN MASS TRANSPORTATION ACT OF 1964, AS AMENDED, AND IN PART BY THE TAXES OF THE CITIZENS OF LOS ANGELES COUNTY AND OF THE STATE OF CALIFORNIA.

DESIGNED BY DRP & RN
DRAWN BY L DE JESUS & RN
CHECKED BY Siddhartha Agarwal
IN CHARGE K. Sain
DATE 09 SEP. 90

REGISTERED PROFESSIONAL ENGINEER K.V. SAIN 22621 EXP 6-30-95 MECHANICAL STATE OF CALIFORNIA

Rail Construction Corporation
a Subsidiary of the Los Angeles County Transportation Commission
METRO RED LINE

SUBMITTED K. Sain

METRO RAIL TRANSIT CONSULTANTS
DMJM/FBGD/KE/HWA

APPROVED

LA CBD TO NORTH HOLLYWOOD
WILSHIRE ALVARADO TO WILSHIRE VERMONT

PUMP HOUSE PLAN, SECTION & DETAIL

CONTRACT NO B-201
DRAWING NO M-201 REV 2
SCALE NONE
SHEET NO 331

137890

6-4-93

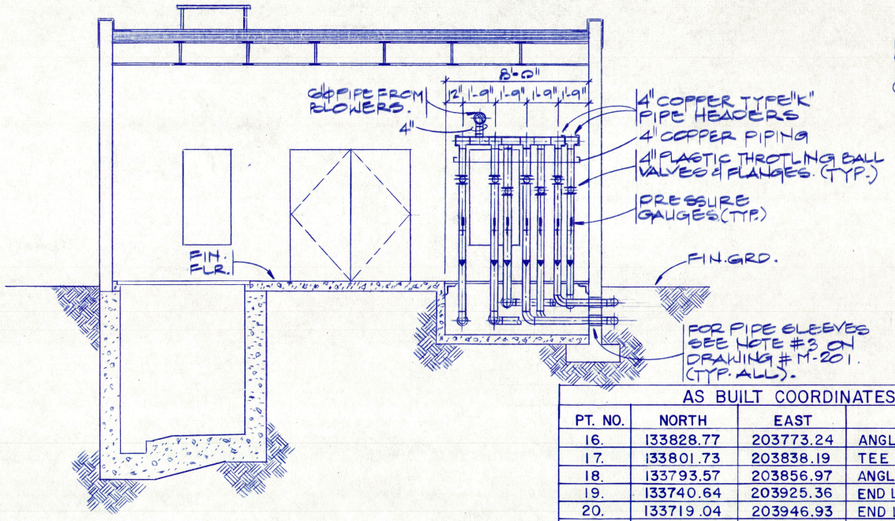

SECTION (3) (SCALE: 1/4"=1'-0") M-201

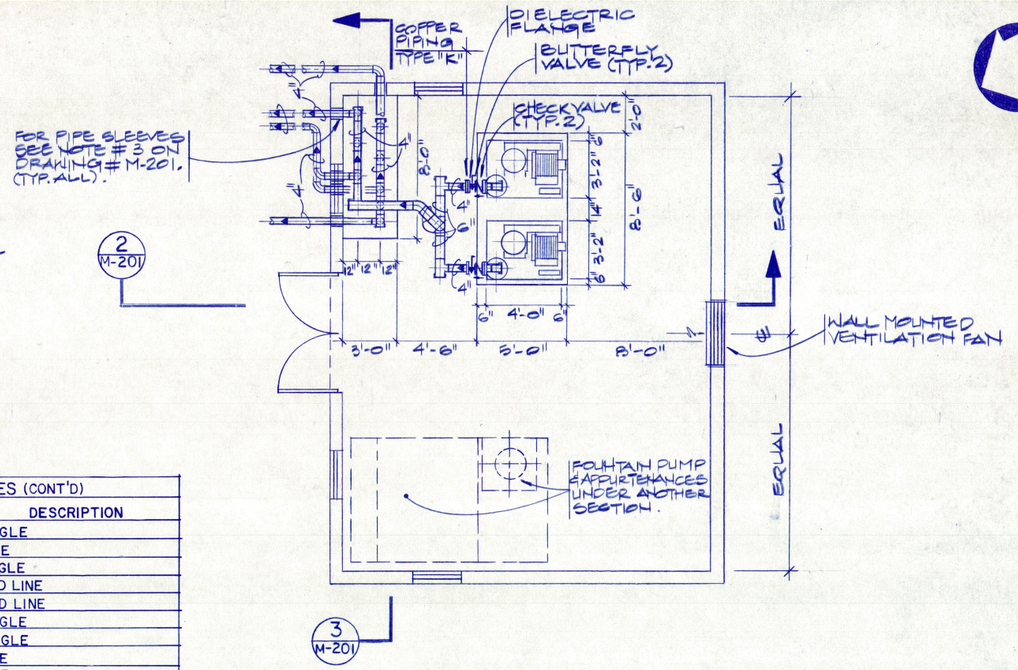

PUMP HOUSE FLOOR PLAN (1) M-201
(SCALE: 1/4" = 1'-0")

"NOTES"

1. AIR BLOWER BY ROOTS DIVISION, 68 UNIVERSAL RAI 25 HP EACH (2 UNITS), 480 V, 3Φ, 60 HZ OR APPROVED EQUAL.
2. PROVIDE ONE (1) DIRECT DRIVEN PROPELLER FAN FOR VENTILATION OF PUMP HOUSE BUILDING, RATED @ 16,600 CFM @ 0.125 STATIC PRESSURE. FAN SHALL OPERATE @ 860 RPM, WITH 2HP MOTOR (480V, 3 PHASE, 60 Hz. EXHAUST FAN SHALL BE "DYNAMASTER" MODEL # FQ36L8 OR APPROVED EQUAL.
3. FOR PIPE SLEEVES THRU CONCRETE WALLS SEE SPECIFICATIONS SECTION # 15142 & DRAWING # MS-602C, (SHEET # 236), "PIPE SLEEVE FOR EXTERIOR STRUCTURAL ELEMENTS, TYPE 'L'".
4. PIPING LENGTH DIMENSIONS SHOWN ON SITE PLAN ON DRAWING # M-202 ARE APPROXIMATELY ONLY. CONTRACTOR TO ESTABLISH CORRECT DIMENSIONS IN THE FIELD.

AS BUILT COORDINATES (SEE DWG. NO. M-202 FOR PT. NOS.)

PT. NO.	NORTH	EAST	DESCRIPTION
1.	133274.55	203716.61	COPPER LINES AT WALL
2.	133274.70	203715.07	COPPER LINES AT WALL
3.	133274.81	203713.57	COPPER LINES AT WALL
4.	133276.47	203704.11	COPPER LINES AT WALL
5.	133294.16	203718.33	COPPER LINES AT ANGLE
6.	133295.10	203717.03	COPPER LINES AT ANGLE
7.	133294.50	203715.72	COPPER LINES AT ANGLE
8.	133295.15	203715.07	COPPER LINES AT ANGLE
9.	133341.40	203735.65	ANGLE
10.	133364.33	203658.91	ANGLE
11.	133435.32	203591.20	ANGLE
12.	133570.90	203539.86	TEE
13.	133668.38	203502.80	ANGLE
14.	133759.30	203543.61	ANGLE
15.	133844.50	203661.46	ANGLE

AS BUILT COORDINATES (CONT'D)

PT. NO.	NORTH	EAST	DESCRIPTION
16.	133828.77	203773.24	ANGLE
17.	133801.73	203838.19	TEE
18.	133793.57	203856.97	ANGLE
19.	133740.64	203925.36	END LINE
20.	133719.04	203946.93	END LINE
21.	133662.38	203999.22	ANGLE
22.	133582.39	203996.25	ANGLE
23.	133495.60	203903.69	TEE
24.	133442.73	203845.44	TEE
25.	133249.43	203979.93	ANGLE
26.	133262.76	204022.76	ANGLE
27.	133408.80	203984.47	END LINE
28.	133631.60	203892.56	END LINE
29.	133633.39	203807.25	ANGLE
30.	133612.28	203786.16	TEE
31.	133577.54	203750.98	ANGLE
32.	133490.87	203755.50	END LINE
33.	133412.53	203814.13	LOWER LAKE DRAIN
34.	133307.48	203710.12	UPPER LAKE DRAIN
35.	133340.88	203684.02	FOUNTAIN INTAKE
36.	133490.07	203721.01	END LINE
37.	133611.53	203689.07	TEE
38.	133734.35	203656.97	END LINE
39.	133751.97	203679.68	END LINE
40.	133702.55	203796.35	TEE
41.	133653.17	203911.67	END LINE
42.	133544.02	203812.61	CORNER FOUNTAIN SLAB
43.	133532.47	203796.53	CORNER FOUNTAIN SLAB
44.	133516.34	203808.23	CORNER FOUNTAIN SLAB
45.	133528.11	203824.30	CORNER FOUNTAIN SLAB

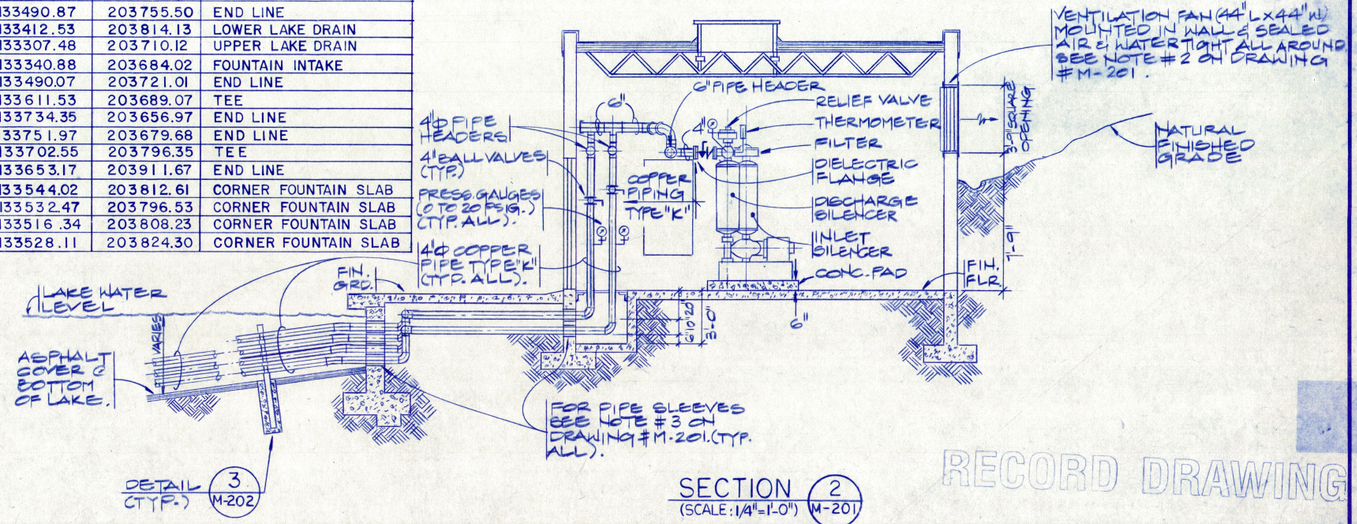

DETAIL (3) (TYP.) M-202

SECTION (2) (SCALE: 1/4"=1'-0") M-201

RECORD DRAWING

THE PREPARATION OF THIS DRAWING HAS BEEN FINANCED IN PART THROUGH A GRANT FROM THE U.S. DEPARTMENT OF TRANSPORTATION, URBAN MASS TRANSPORTATION ADMINISTRATION, UNDER THE URBAN MASS TRANSPORTATION ACT OF 1964, AS AMENDED, AND IN PART BY THE TAXES OF THE CITIZENS OF LOS ANGELES COUNTY AND OF THE STATE OF CALIFORNIA.

REV	DATE	BY	SUB	APP	DESCRIPTION
2	5.12.94	RGR	YDA	GMC	NO REVISIONS INDICATED ON CM'S AS-BUILT MARK-UP PRINTS. ADDED TABLE OF COORDINATES FROM DWG. NO. M-202
1	4.29.93	JK	NP	CS	REV. PER E-201-CH 55.01

DESIGNED BY DRP & RN
DRAWN BY L DE JESUS & RN
CHECKED BY Sudhir Agarwal
IN CHARGE K. Sain
DATE 04 SEP. 90

REGISTERED PROFESSIONAL ENGINEER K.V. SAIN 22621 EXP. 6-30-93 MECHANICAL STATE OF CALIFORNIA

Rail Construction Corporation
a Subsidiary of the Los Angeles County Transportation Commission
METRO RED LINE

SUBMITTED K. Sain

METRO RAIL TRANSIT CONSULTANTS
DMJM/PBQD/KE/HWA

APPROVED

LA CBD TO NORTH HOLLYWOOD
WILSHIRE ALVARADO TO WILSHIRE VERMONT

PUMP HOUSE PLAN, SECTION & DETAIL

CONTRACT NO B-201
DRAWING NO M-201 REV 2
SCALE NONE
SHEET NO 331

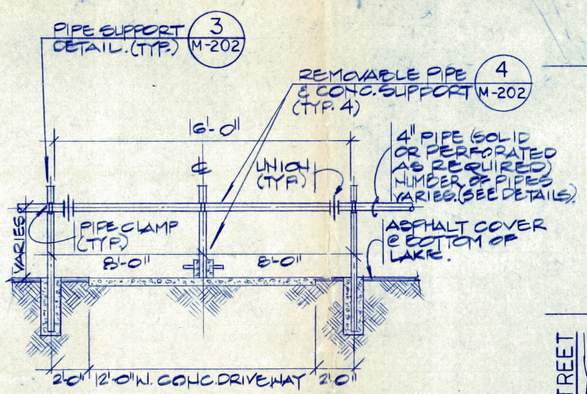

PIPING & SUPPORTS ACROSS CONCRETE DRIVEWAYS (1 M-202)

(NOT TO SCALE)

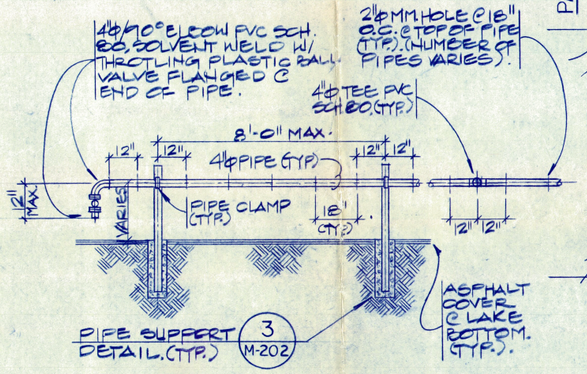

PIPING & SUPPORTS (2 M-202)

(NOT TO SCALE)

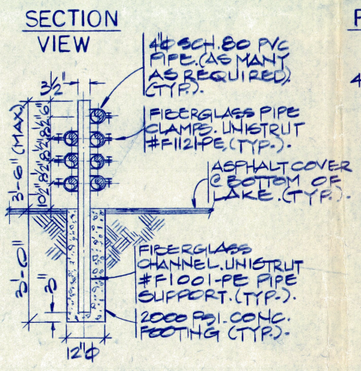

PIPING SUPPORTS DETAIL (3 M-202)

(NOT TO SCALE)

SITE PLAN

SCALE: 1"=62.50'

SYMBOL LIST

- SOLID PIPE (AIR PIPE MAINS)
- PERFORATED PIPE (AIR PIPE DISTRIBUTORS)
- PLASTIC BALL VALVE @ END OF PIPING
- DIRECTION OF FLOW
- EXPANSION JOINT
- PIPE ANCHOR

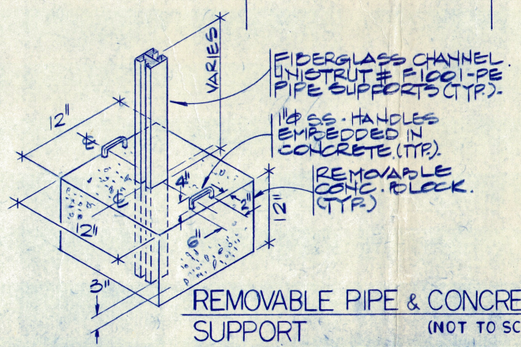

REMOVABLE PIPE & CONCRETE SUPPORT (4 M-202)

(NOT TO SCALE)

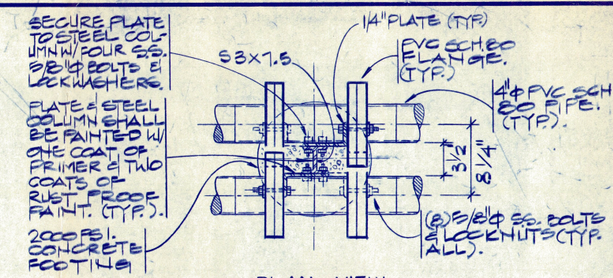

PLAN VIEW

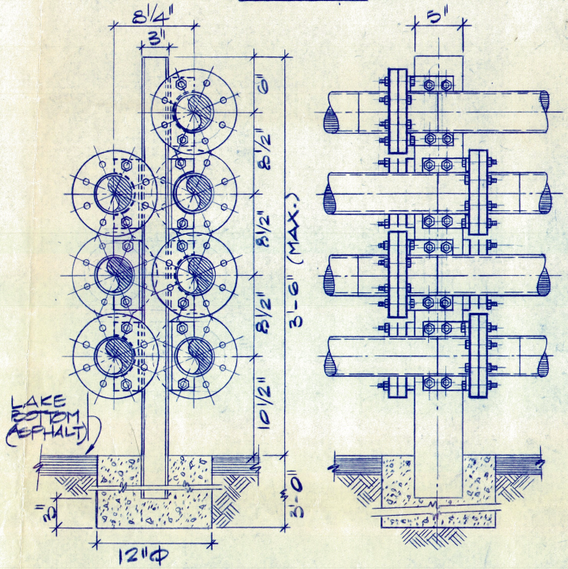

CROSS SECTION VIEW LONGITUDINAL VIEW

PIPING ANCHORING DETAIL (5 M-202)

(NOT TO SCALE)

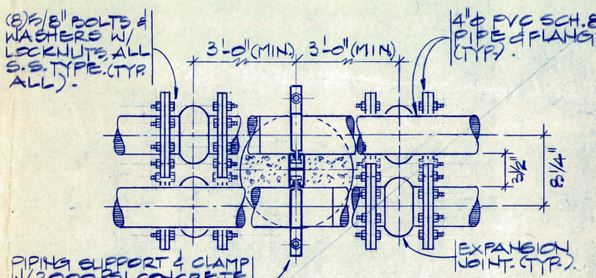

PLAN VIEW

NOTE:

PIPING SHALL BE STACKED & EXPANSION JOINTS SHALL BE STAGGERED WHERE REQUIRED IN SIMILAR FASHION AS SHOWN ON DETAIL #5 DRAWING # M-202. (TYP.).

EXPANSION JOINT DETAIL (6 M-202)

(NOT TO SCALE)

APR 2 9 1993

REV	DATE	BY	SUB	APP	DESCRIPTION
4-2993					REV. PER B-201-CN 55

THE PREPARATION OF THIS DRAWING HAS BEEN FINANCED IN PART THROUGH A GRANT FROM THE U.S. DEPARTMENT OF TRANSPORTATION, URBAN MASS TRANSPORTATION ADMINISTRATION, UNDER THE URBAN MASS TRANSPORTATION ACT OF 1964, AS AMENDED, AND IN PART BY THE TAXES OF THE CITIZENS OF LOS ANGELES COUNTY AND OF THE STATE OF CALIFORNIA.

DESIGNED BY DRP & RN
DRAWN BY L DE JESUS & RN
CHECKED BY Sudhir Agkawal
IN CHARGE K. Sain.
DATE 04 SEP. 90

REGISTERED PROFESSIONAL ENGINEER K.V. SAIN 22621 EXP. 6-30-93 MECHANICAL STATE OF CALIFORNIA

Rail Construction Corporation
a Subsidiary of the Los Angeles County Transportation Commission
METRO RED LINE

SUBMITTED K. Sain.

METRO RAIL TRANSIT CONSULTANTS DMJM/PBQD/KE/HWA

APPROVED

LA CBD TO NORTH HOLLYWOOD
WILSHIRE ALVARADO TO WILSHIRE VERMONT

AERATOR PIPING LAYOUT

CONTRACT NO B-201
DRAWING NO M-202 REV 1
SCALE AS SHOWN
SHEET NO 332

137890

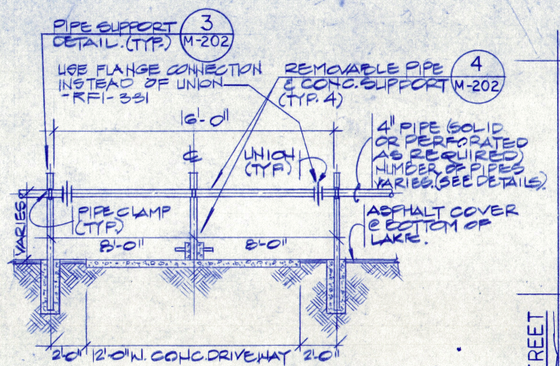

PIPING & SUPPORTS ACROSS CONCRETE DRIVEWAYS (1 M-202)
(NOT TO SCALE)

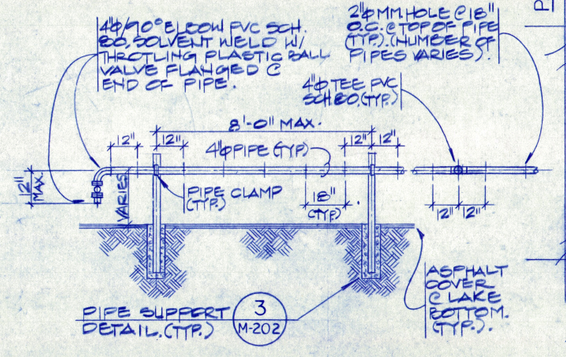

PIPING & SUPPORTS (2 M-202)
(NOT TO SCALE)

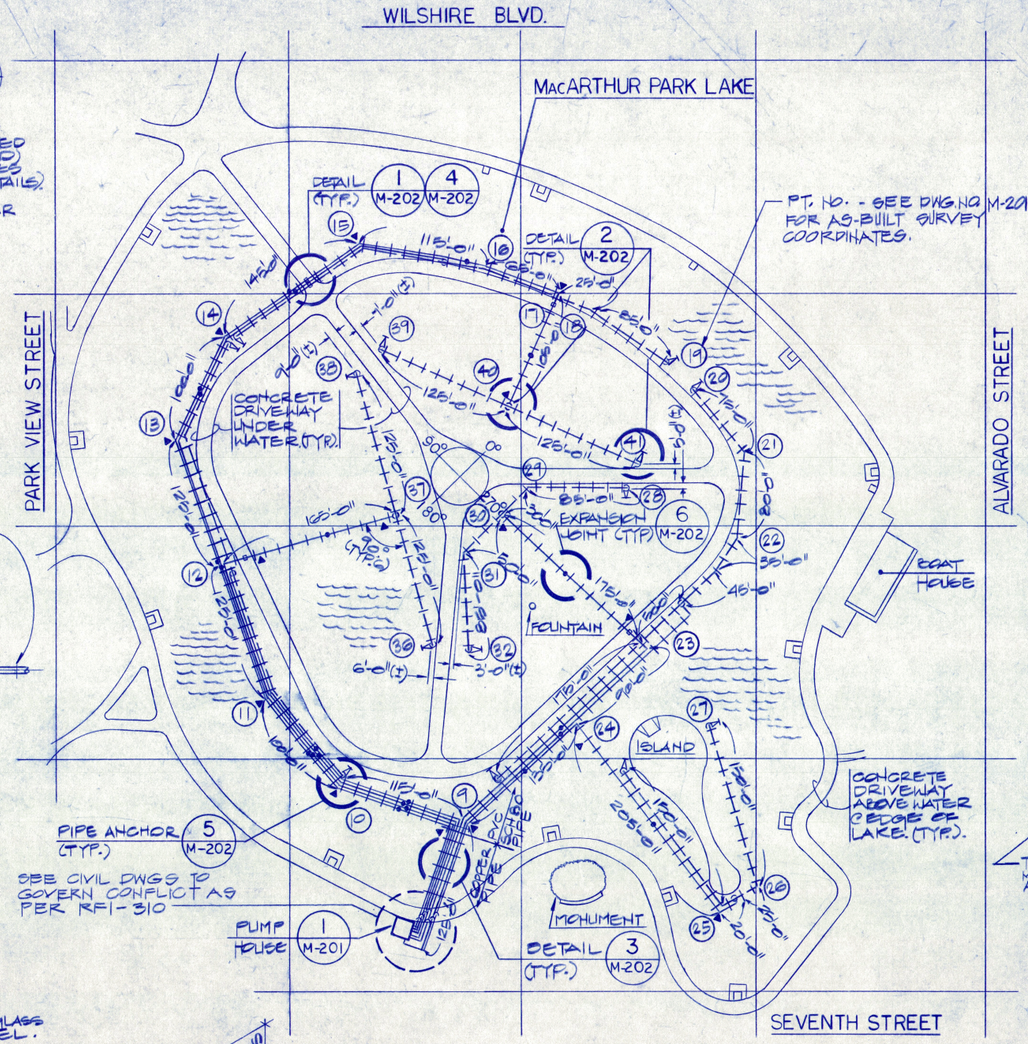

SITE PLAN
SCALE: 1" = 62.50'

SYMBOL LIST
- SOLID PIPE (AIR PIPE MAINS)
- PERFORATED PIPE (AIR PIPE DISTRIBUTORS)
- PLASTIC BALL VALVE @ END OF PIPING
- DIRECTION OF FLOW
- EXPANSION JOINT
- PIPE ANCHOR

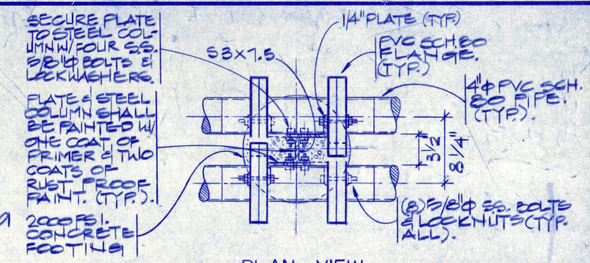

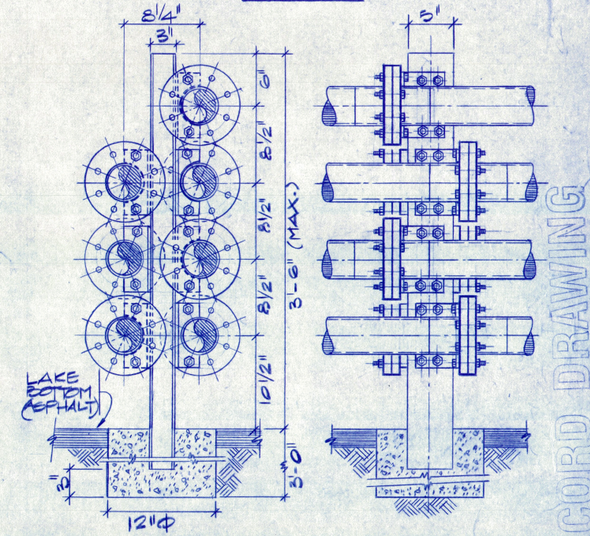

PIPING ANCHORING DETAIL (5 M-202)
(NOT TO SCALE)

THIS CROSS-SECTION SHOWS THE MAX. NUMBER OF PIPE LINES AT AN ANCHORING POINT (RFI-324)

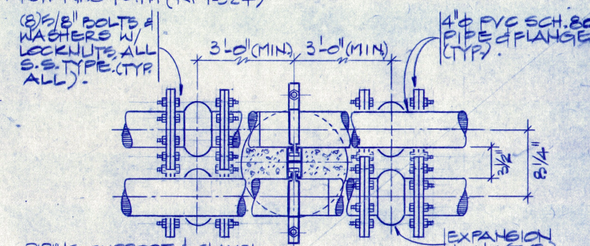

NOTE:
PIPING SHALL BE STACKED & EXPANSION JOINTS SHALL BE STAGGERED WHERE REQUIRED, IN SIMILAR FASHION AS SHOWN ON DETAIL #5, DRAWING # M-202. (TYP.).

EXPANSION JOINT DETAIL (6 M-202)
(NOT TO SCALE)

PIPING SUPPORTS DETAIL (3 M-202)
(NOT TO SCALE)

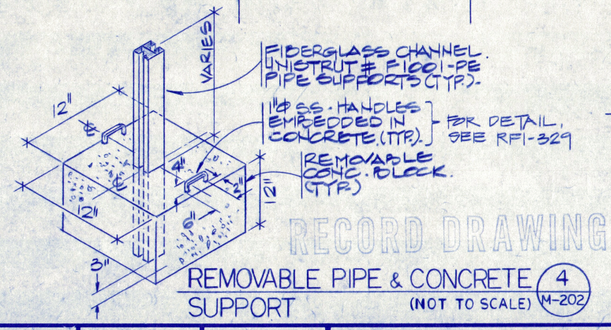

REMOVABLE PIPE & CONCRETE SUPPORT (4 M-202)
(NOT TO SCALE)

RECORD DRAWING

RECORD DRAWING

THE PREPARATION OF THIS DRAWING HAS BEEN FINANCED IN PART THROUGH A GRANT FROM THE U.S. DEPARTMENT OF TRANSPORTATION, URBAN MASS TRANSPORTATION ADMINISTRATION, UNDER THE URBAN MASS TRANSPORTATION ACT OF 1964, AS AMENDED, AND IN PART BY THE TAXES OF THE CITIZENS OF LOS ANGELES COUNTY AND OF THE STATE OF CALIFORNIA.

REV	DATE	BY	SUB	APP	DESCRIPTION
2	9-23-94	RSR	DDA	CMC	REV. SEW PER CM'S AS-BUILT MARKUPS (BID) 10-5-94
1	4-29-93	JE	NP		REV PER B-201-CN 559.01

DESIGNED BY DRP & RN
DRAWN BY L DE JESUS & RN
CHECKED BY
IN CHARGE K. Sain.
DATE 04 SEP. 90

REGISTERED PROFESSIONAL ENGINEER K.V. SAIN 22621 EXP 6-30-94 MECHANICAL STATE OF CALIFORNIA

Rail Construction Corporation
A Subsidiary of the Los Angeles County Transportation Commission
METRO RED LINE

SUBMITTED K. Sain.

METRO RAIL TRANSIT CONSULTANTS
DMJM/FBGD/KE/HWA
APPROVED

LA CBD TO NORTH HOLLYWOOD
WILSHIRE ALVARADO TO WILSHIRE VERMONT

AERATOR PIPING LAYOUT

CONTRACT NO B-201
DRAWING NO M-202 REV 2
SCALE AS SHOWN
SHEET NO 332

137600

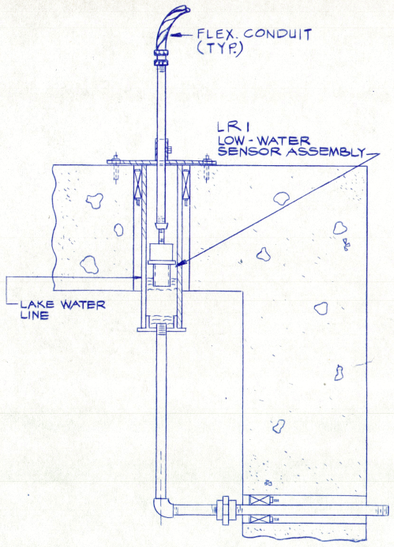

FOUNTAIN LIGHTING
LOW WATER SHUT-OFF
(SEE NOTE 2 ON DWG. NO. E-207)

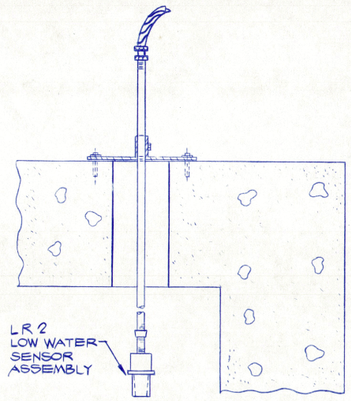

FOUNTAIN PUMP
LOW WATER SHUT-OFF
(SEE NOTE 2 ON DWG. NO. E-207)

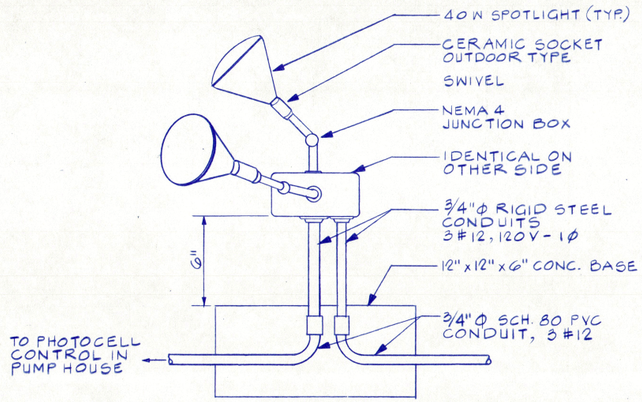

DETAIL - ISLAND SPOTLIGHT ASSEMBLY NO. A
TYPICAL FOR ISLAND SPOTLIGHT NO. D

NOTES:

1. LOW WATER SENSOR ASSEMBLIES FOR FOUNTAIN LIGHTING AND PUMP SYSTEMS ARE LOCATED IN THE PUMP HOUSE WET WELL. SEE CIVIL DRAWING FOR LOCATION.

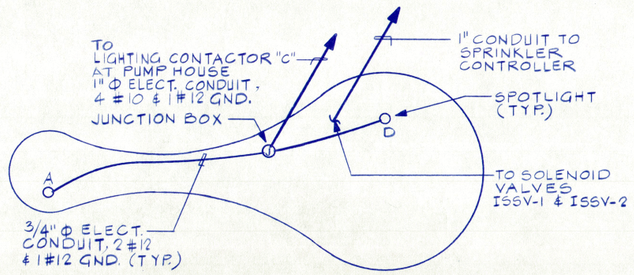

ISLAND SPOTLIGHT LAYOUT

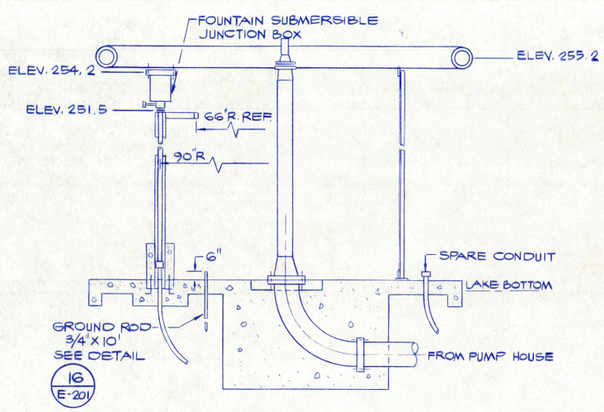

FOUNTAIN SECTION
(SEE NOTE 2 ON DWG. NO. E-207)

RECORD DRAWING

REV	DATE	BY	SUB	APP	DESCRIPTION
2	5/12/94	EM	JDA	GMC	NO REVISIONS INDICATED ON CM'S AS-BUILT MARKUPS RECEIVED 5-11-94
1	8/24/93	[illegible]	[illegible]	GMC	ADDED PER B201-CN-55.01
0	5/6/93	[illegible]	[illegible]	[illegible]	INITIAL ISSUE PER B201-CN-55.01

THE PREPARATION OF THIS DRAWING HAS BEEN FINANCED IN PART THROUGH A GRANT FROM THE U.S. DEPARTMENT OF TRANSPORTATION, FEDERAL TRANSPORTATION ADMINISTRATION, UNDER THE URBAN MASS TRANSPORTATION ACT OF 1964, AS AMENDED, AND IN PART BY THE TAXES OF THE CITIZENS OF LOS ANGELES COUNTY AND OF THE STATE OF CALIFORNIA.

DESIGNED BY [signature]
DRAWN BY ALAN A. JIMENEZ
CHECKED BY Joseph Thomas
IN CHARGE [signature]
DATE 5-6-93

REGISTERED PROFESSIONAL ENGINEER JUAN A. JOSE No. 7311 Exp. 8-30-94 ELECTRICAL STATE OF CALIFORNIA

LACK a Subsidiary of the Los Angeles County Transportation Commission

Rail Construction Corporation
METRO RED LINE

DMJM ENGINEERING MANAGEMENT CONSULTANT
an association of:
Parsons Brinckerhoff Quade & Douglas, Inc.
Daniel, Mann, Johnson & Mendenhall
ICF-Kaiser Engineers (Calif.) Corp.
Escudero-Fribourg Architects
Jenkins Gales Martinez, Inc.
The Nettleship Group, Inc.

SUBMITTED [signature]
APPROVED [signature]

LA CBD TO NORTH HOLLYWOOD
WILSHIRE/ALVARADO — WILSHIRE/VERMONT
FOUNTAIN LIGHTING DETAILS

CONTRACT NO B201
DRAWING NO E-304
REV 2
SCALE NO SCALE
SHEET NO 348

12

BUREAU OF ENGINEERING

MACARTHUR LAKE
STORMWATER CAPTURE PROJECT
PROJECT NO. S33WMLRP, S343MSWC, S043MSWC

ATTACHMENT 6
REQUIREMENTS FOR MITIGATION MONITORING

JANUARY 2026

City of Los Angeles
California

Department of Public Works
Bureau of Engineering

ENGINEERING
CITY OF LOS ANGELES

THIS PAGE INTENTIONALLY LEFT BLANK

Mitigation Monitoring Program

MacArthur Lake Stormwater Capture Project

State Clearinghouse No. 2022040153

City of Los Angeles, Department of Public Works
1149 South Broadway, 9th Floor
Los Angeles, CA 90015

August 2025

Table of Contents

1 Introduction 1
2 Monitoring Procedures 1
3 Mitigation Monitoring Program 1

Tables

Table 1 Mitigation Measures 3
Table 2 Project Commitments 13
Table 3 Best Management Practices 17

This page intentionally left blank.

1 Introduction

This document constitutes the Mitigation Monitoring Program (MMP) for the MacArthur Lake Stormwater Capture Project (proposed project). This MMP, prepared in compliance with Public Resources Code Section 21081.6 and State CEQA Guidelines Section 15097, specifies the monitoring requirements for the MacArthur Lake Stormwater Capture Project as described in the Final Environmental Impact Report (EIR) prepared for the project.

The City of Los Angeles (City) is the California Environmental Quality Act (CEQA) lead agency for the proposed project and, therefore, is responsible for administering and implementing the MMP. The City of Los Angeles Department of Public Works, Bureau of Sanitation (LASAN) is the project lead. However, project construction will be implemented by the Bureau of Engineering (BOE), and operations and maintenance activities will be implemented by the City, LASAN, and the City Department of Recreation and Parks (RAP).

2 Monitoring Procedures

This MMP shall be enforced throughout all phases of the proposed project. The City shall be responsible for implementing the MMP. The City may delegate monitoring responsibilities to staff, consultants, or contractors for specific mitigation measures, project commitments, or best management practices (BMPs) as specified in the MMP. Applicable measures shall be included in corresponding bid specifications released for the proposed project.

The construction contractor shall submit an Environmental Compliance Plan for BOE approval prior to the beginning of ground-disturbing construction activities. The Environmental Compliance Plan will document how the contractor intends to comply with mitigation measures, project commitments, and BMPs applicable to the contract. BOE will also ensure that monitoring is documented in an Environmental Compliance Report and that deficiencies are promptly corrected. A designated environmental monitor with BOE will track and document compliance with measures, note any problems that may result, and take appropriate action to rectify problems.

3 Mitigation Monitoring Program

The MMP addresses the mitigation measures adopted for the proposed project and the methods of monitoring and reporting on these actions. In addition, the City has elected to also include project commitments and BMPs in the MMP to establish these commitments for project implementation.

The following tables provide: the number (where applicable) and title of each mitigation measure, project commitment, or BMP identified in the Final EIR; the full text of the subject mitigation measure, project commitment, or BMP; the monitoring action; the timing of implementation; and actions verifying compliance. Specifically, the information in the tables includes the following:

- Monitoring Action: Project element that will be implemented and actions that are required to implement the mitigation measure, project commitment, or BMP
- Timing of Implementation: When the mitigation measure, project commitment, or BMP will be implemented
- Monitoring Responsibility: The party responsible for implementing the mitigation measure, project commitment, or BMP
- Verification of Compliance: The mechanism that will be used to verify implementation

Table 1 provides, by environmental resource topic, the mitigation measures applicable to the proposed project. **Table 2** provides, by environmental resource topic, the project commitments (not identified as mitigation measures) that the City will implement as part of the tribal consultation process required under Assembly Bill 52 as well as a project commitment to conduct post-construction lake monitoring. **Table 3** provides additional best management practices (not identified as mitigation measures) that will also be implemented as part of the proposed project.

The City is ultimately responsible for ensuring that all mitigation measures, project commitments, and BMPs are implemented. Some measures will be implemented by the construction contractor(s) in accordance with their contract specifications, which include environmental compliance requirements. The City will remain responsible for ensuring that implementation occurs and that monitoring of the mitigation measures, project commitments, and BMPs is completed in accordance with the MMP.

Table 1 Mitigation Measures				
Mitigation Measure	**Monitoring/ Reporting Action**	**Timing of Implementation**	**Monitoring Responsibility**	**Verification of Compliance**
Biological Resources				
MM-BIO-1: Protection of Migratory Birds. If construction or maintenance activities that require the removal of vegetation are scheduled to occur during the nesting season for birds/raptors (January 1 to September 15), vegetation clearing for the proposed project shall be conducted outside the nesting season, if feasible. If it is not feasible to schedule vegetation clearing outside of nesting season and prior to implementation of construction or maintenance activities that could result in removal of or disturbances to vegetation providing bird nesting habitat during the bird nesting season (January 1 through September 15), the following shall occur: ▪ A biological survey will be conducted 72 hours prior to construction or maintenance that will remove or disturb suitable nesting habitat during the breeding season. The survey will be performed by a qualified avian biologist with experience conducting breeding bird surveys. The biologist will prepare a survey report within 24 hours of conducting the survey, documenting the presence or absence of any active nest of a migratory bird. ▪ If an active nest is located within the construction area, or in the vicinity, and the biologist determines that the nest may be impacted, an appropriate no-work buffer will be established by the biologist, in consultation with CDFW, based on the species, the type of construction activities, and other considerations. Vegetation removal within the buffer and other construction activities as determined by the biologist will be postponed until the nest is vacated and juveniles have fledged (minimum of 6 weeks after egg laying) and when there is no evidence of a second attempt at nesting. ▪ The biologist shall serve as a construction monitor during those periods when construction activities will occur near active nest areas to ensure that no inadvertent impacts on these nests shall occur.	Avoidance of vegetation removal during nesting season, if feasible; Documentation of biological survey, if required; Establishment of an appropriate no-work buffer by the biologist, in consultation with CDFW, if an active nest is located within the construction area; Biological construction monitoring during construction, if vegetation clearing occurs during nesting season	Prior to construction; During construction if vegetation is not cleared outside of nesting season; During maintenance activities	City BOE; qualified avian biologist	Contract specifications; Field inspections

Table 1 Mitigation Measures				
Mitigation Measure	**Monitoring/ Reporting Action**	**Timing of Implementation**	**Monitoring Responsibility**	**Verification of Compliance**
Cultural Resources				
MM-CR-1. Archaeological Resources Pre-construction Worker Training. Prior to the commencement of ground disturbing activities, a professional qualified archaeologist shall be retained to provide construction personnel with a briefing in the identification of archaeological resources and information on regulatory requirements for the protection of cultural resources. The briefing shall include examples of cultural resources (i.e., archaeological, Native American, and paleontological resources) that may be onsite and protocols to follow if discoveries are made. The archaeologist shall develop the training program and any supplemental materials necessary for its implementation.	Retention of a qualified archaeologist; Archaeological resources briefing/training program conducted by a qualified archaeologist for all construction personnel	Prior to construction	City BOE; qualified archaeologist	Contract specifications; Documentation of worker training and attendance records
MM-CR-2. Archaeological Resources Monitoring. Prior to initiation of any project-related grading or excavation activities, a qualified archaeologist and an archaeological monitor under the archaeologist's direction shall be retained to provide monitoring during ground disturbing (i.e., excavation) activities in native soils. **Resource Identification.** During construction, should subsurface archaeological resources be discovered, all activity within 50 feet of the find shall stop and the qualified archaeologist shall assess the significance of the find in accordance with State CEQA Guidelines Section 15064.5. Work shall not resume in the direct area of the discovery until it is assessed by the archaeologist and they indicate that construction can resume. **Resource Evaluation and Recovery.** If any find is determined to be significant, the archaeologist shall determine, in consultation with the implementing agency, appropriate avoidance measures or other appropriate mitigation. Per State CEQA Guidelines Section 15126.4(b)(3), preservation in place shall be the preferred means to avoid impacts to archaeological resources qualifying as historical resources. Consistent with State CEQA Guidelines Section 15126.4(b)(3)(C), if it is demonstrated that resources cannot be avoided, the qualified archaeologist shall develop additional treatment measures, such as data recovery or other appropriate measures, in consultation with the implementing agency, as applicable. When data recovery	Retention of a qualified archaeologist and an archaeological monitor under the archaeologist's direction; Monitoring of ground disturbing activities by the qualified archaeologist; Implementation of actions for resource identification, resource evaluation and recovery, human remains, and reporting and curation, if applicable, as specified in the mitigation measure	Prior to construction; During construction	City BOE; qualified archaeologist; archaeological monitor	Contract specifications; Field inspections; Archaeological monitor's logs

Table 1 Mitigation Measures				
Mitigation Measure	**Monitoring/ Reporting Action**	**Timing of Implementation**	**Monitoring Responsibility**	**Verification of Compliance**
through excavation is the only feasible mitigation, a data recovery plan, which makes provisions for adequately recovering the scientifically consequential information from and about the historical resource, shall be prepared by the archaeologist prior to any excavation of the resource being undertaken. Any resulting data recovery reports shall be deposited with the California Historical Resources Regional Information Center or a legal repository. If an archaeological site does not qualify as a historical resource but meets the criteria for a unique archaeological resource as defined in Section 21083.2 of the Public Resources Code, then the site shall be treated in accordance with the provisions of Section 21083.2. **Human Remains.** If human remains are encountered at any point during project excavation, the contractor shall immediately cease all work on the project until the coroner deems it appropriate to resume. All procedures before and after the human remains are removed shall follow applicable laws and regulations, including Health and Safety Code Section 7050.5 and Public Resources Code Section 5097.98. **Reporting and Curation.** Reporting shall be completed in conformance with the guidelines set forth by the California Department of Parks and Recreation Office of Historic Preservation for Archaeological Research Management Reports. Proper curation and archiving of artifacts shall be conducted in accordance with regulatory requirements and industry standards. Within three months of the completion of monitoring, a compliance report shall be submitted to the implementing agency that summarizes the monitoring efforts, including any artifacts that have been processed. The final report shall be submitted to the South Central Coastal Information Center.				

Table 1 Mitigation Measures				
Mitigation Measure	**Monitoring/ Reporting Action**	**Timing of Implementation**	**Monitoring Responsibility**	**Verification of Compliance**
MM-CR-3. Paleontological Resources Pre-construction Worker Training. Prior to the commencement of ground disturbing activities, a qualified paleontologist shall be retained to create a Worker's Environmental Awareness Program pamphlet that will be provided as training to construction personnel to understand regulatory requirements for the protection of paleontological resources. This training shall include examples of paleontological resources to be aware of in the vicinity and protocols to follow if discoveries are made. The paleontologist shall develop the pamphlet and any supplemental materials necessary to implement the program.	Retention of a qualified paleontologist; Creation of a Worker's Environmental Awareness Program pamphlet by the qualified paleontologist and distribution to all construction personnel	Prior to construction	City BOE; qualified paleontologist	Contract specifications; Worker's Environmental Awareness Program pamphlet; Documentation of distribution to construction personnel
MM-CR-4. Paleontological Resources Monitoring. Prior to initiation of any project-related grading or excavation activities, a professional paleontologist and a paleontological monitor under the paleontologist's direction shall be retained. The paleontological monitor shall monitor all excavation in native soils. **Monitoring.** Monitoring will entail the visual inspection of excavated or graded areas as well as trenching, sidewalls, and entrance/exit pits during project excavation. If no significant fossils have been exposed, the paleontologist may determine that full time monitoring is no longer necessary, and periodic spot checks or no further monitoring may be recommended. **Resource Identification, Evaluation, and Recovery.** If a paleontological resource is encountered when a monitor is not onsite, all construction shall cease within at least 50 feet of the discovery and the paleontologist or paleontological monitor shall be notified immediately. If the monitor is present at the time of discovery, then the monitor will have the authority to temporarily divert the construction equipment around the find until it is assessed for scientific significance. Work shall not resume in the direct area of the discovery until it is assessed, and the paleontologist indicates that construction can resume. If the resource is found to be significant, the paleontologist shall systematically remove and stabilize the specimen(s) in anticipation of preservation. If necessary, soil samples will be collected per Society of Vertebrate Paleontologists standards. After basic laboratory analysis and cataloging has been	Retention of a qualified paleontologist and a paleontological monitor under the paleontologist's direction; Monitoring of grading or excavation activities by the professional paleontologist; Implementation of actions for resource identification, evaluation, and recovery, if applicable, as specified in the mitigation measure	Prior to construction; During construction	City BOE; qualified paleontologist; paleontological monitor	Contract specifications; Field inspections; Paleontological monitor's logs

Table 1 Mitigation Measures				
Mitigation Measure	**Monitoring/ Reporting Action**	**Timing of Implementation**	**Monitoring Responsibility**	**Verification of Compliance**
completed, the specimen(s) shall be curated at a qualified research facility, such as the Los Angeles County Natural History Museum or other legal repository. Within three months of the laboratory analysis, a compliance report shall be submitted to the implementing agency that summarizes the efforts and result. The final report shall be submitted to the Los Angeles County Natural History Museum or other legal repository.				
Noise and Vibration				
MM-NV-1. Construction Noise Control and Mitigation Plan. The City will require its construction contractor(s) working on proposed project improvements to develop a noise control plan to address construction equipment noise at noise-sensitive uses where construction noise impacts may be significant. The noise control plan must be approved by the City prior to implementation and will require the construction contractor(s) to specify noise-reducing construction measures and practices that will be employed to reduce noise from construction activities to the maximum extent feasible. Measures that can be used to limit construction-related noise include, but are not limited to, the following: ▪ **Construction hours.** Limit construction to the hours of 7:00 a.m. to 9:00 p.m. on weekdays and between 8:00 a.m. and 6:00 p.m. on Saturdays, and prohibit construction equipment noise anytime on Sundays and holidays. Prevent construction personnel from being on the project site (including laydown and storage areas), and prohibit material or equipment deliveries and collections, during the prohibited hours. ▪ **Construction equipment.** Properly muffle and maintain all construction equipment powered by internal combustion engines. Ensure that all construction equipment powered by gasoline or diesel engines has sound control devices that are at least as effective as those originally provided by the manufacturer and that all equipment is operated and maintained to minimize noise generation.	Development and implementation of a project-specific Construction Noise Control and Mitigation Plan by construction contractor(s) for approval by the City; Implementation of measures specified in the plan; Establishment of noise complaint procedures; Designation of disturbance coordinator with name and complaint telephone number posted onsite; Notification of neighboring noise-sensitive land uses and building managers	Prior to construction; During construction	City BOE; construction contractor(s); Disturbance Coordinator	Contract specifications; Field inspections; Regular reporting on construction noise control and mitigation plan, including documentation; Complaint log; Documentation of notifications to neighboring land uses specified in mitigation measure

Table 1 Mitigation Measures				
Mitigation Measure	**Monitoring/ Reporting Action**	**Timing of Implementation**	**Monitoring Responsibility**	**Verification of Compliance**
▪ **Stationary equipment.** Locate stationary noise-generating construction equipment, such as air compressors and portable power generators, as far as practical from existing noise-sensitive land uses; muffle and enclose such equipment within temporary enclosures and shielded by barriers, to the extent feasible. ▪ **Quiet equipment.** Use the quietest equipment available, equip internal combustion powered equipment with properly operating mufflers, and keep equipment in tune to avoid backfires. In addition, if exposed, fit engines with protective shrouds to reduce motor noise. ▪ **Electrical power.** Use local electrical grid-power when feasible to avoid the use of portable generators. ▪ **Temporary noise barriers.** Erect temporary noise attenuation barriers adjacent to stationary construction equipment directly between the equipment and noise-sensitive use, where necessary and feasible. Shield construction equipment that is to be stationary for extended periods (e.g., compressors, generators), if appropriate, by erecting temporary noise attenuation barriers. Evaluate the need for, and feasibility of, noise attenuation barriers on a case-by-case basis considering the distance to noise-sensitive receptors, the available space at the construction location, and safety and operational considerations. If used, install the barriers directly between the equipment and the nearest noise-sensitive use to the construction site. ▪ **Noise enclosures.** Use noise-reducing enclosures around noise-generating equipment that has the potential to disturb nearby off-site land uses or where otherwise necessary to comply with City Code noise limits for receiving zones. ▪ **Noise Best Available Control Technology (BACT).** Ensure that equipment and trucks used for project construction use the best available noise control techniques (e.g., improved mufflers, equipment redesign, intake silencers, ducts, engine enclosures, and acoustically attenuating shields or shrouds) wherever feasible.				

Table 1 Mitigation Measures				
Mitigation Measure	**Monitoring/ Reporting Action**	**Timing of Implementation**	**Monitoring Responsibility**	**Verification of Compliance**
▪ **Noise signals.** Use noise-producing signals (e.g., horns, whistles, alarms, and bells) for safety warning purposes only. ▪ **Impact tools.** Power impact tools (e.g., pavement breakers) for project construction hydraulically or electrically (where feasible) to avoid noise associated with compressed air exhaust from pneumatically powered tools. However, where use of pneumatic tools is unavoidable, use an exhaust muffler on the compressed air exhaust. Use quieter procedures, such as drills rather than impact equipment, where feasible. ▪ **Regulatory compliance.** Ensure that all construction equipment used on the proposed project that is regulated for noise by a local, state, or federal agency complies with such regulation while in the course of project activity and use on-site. ▪ **Noise-considerate operation training.** Train construction employees in the proper operation and use of the equipment. (Careless or improper operation or inappropriate use of equipment can increase noise levels. Poor loading, unloading, excavation, and hauling techniques are examples of how a lack of adequate guidance and training may lead to increased noise levels.) ▪ **Noise-considerate staging and laydown.** Store construction equipment on the project site or designated laydown areas while in use, to the extent feasible. This will eliminate noise associated with repeated transportation of the equipment to and from the site. ▪ **Noise monitoring.** Monitor the effectiveness of noise attenuation measures by taking noise measurements. In addition to these measures, prior to the start of construction, the City or its construction contractor will develop a list of measures for controlling noise and for responding to and tracking complaints pertaining to construction noise. These measures include: ▪ Identification of measures that will be implemented to control construction noise.				

Table 1 Mitigation Measures				
Mitigation Measure	**Monitoring/ Reporting Action**	**Timing of Implementation**	**Monitoring Responsibility**	**Verification of Compliance**
▪ Identification of locations where it is infeasible to limit noise to be in compliance with applicable City standards. ▪ Appointment of a public liaison during project construction, who shall be responsible for addressing public concerns about construction activities, including excessive noise. As needed, the liaison shall determine the cause of the noise concern and implement measures to address the concern. The liaison will work directly with the construction contractor to ensure implementation of the Construction Noise Control and Mitigation Plan. ▪ Procedure and phone numbers for notifying the City Department of Health or the Police Department (for complaints). ▪ Designation of a disturbance coordinator for responding to noise complaints, with their name and telephone complaint number to be clearly posted at the construction site; the telephone must be answered at all times during construction. The disturbance coordinator shall coordinate noise complaints and responses with the public liaison. ▪ Plan for notification of neighboring noise-sensitive land uses and non-residential building managers—within 300 feet of the project construction area at least 30 days in advance of high noise-generating activities (defined as activities that generate noise levels of 90 dBA or greater at 50 feet from the source)—regarding the estimated duration of activity and the associated control measures that will be implemented to reduce noise levels.				
MM-NV-2. Construction Vibration Control and Mitigation Plan. To limit the impacts of construction-related vibration on nearby structures where significant vibration impacts would be anticipated, the City or its construction contractor will prepare and implement a project-specific Construction Vibration Control and Mitigation Plan. Specifically, prior to construction of project elements that would result in significant vibration impacts to nearby structures, the City or its construction contractor will retain a professional structural engineer with experience in structural vibration analysis to perform the following tasks:	Preparation and implementation of a project-specific Construction Vibration Control and Mitigation Plan by the City or its construction contractor; Retention of a professional structural engineer with experience in structural vibration analysis by the City or its construction	Prior to construction; During construction; Post construction	City BOE; construction contractor(s); professional structural engineer	Contract specifications; Field inspections; Report of pre- and post-construction conditions of all surveyed structures; Documentation of repairs, if applicable

Table 1 Mitigation Measures				
Mitigation Measure	**Monitoring/ Reporting Action**	**Timing of Implementation**	**Monitoring Responsibility**	**Verification of Compliance**
▪ Review the project plans to determine the potential construction impact zone and conduct pre- and post-construction surveys of the structures that would be subject to significant vibration to document the pre- and post-construction conditions of the surveyed structures. ▪ Prepare a detailed vibration analysis demonstrating that the use of vibratory equipment at the construction site boundary closest to adjacent vibration-sensitive buildings would not result in the potential for building damage. This analysis will take into account other projects whose construction may be planned in the immediate project area and that might overlap with construction of the proposed project. The analysis must detail the safe distances or measures to be undertaken at which the anticipated construction equipment can operate without resulting in vibration levels greater than 0.10 PPV (inches per second) at the buildings located at 2228 7th Street, 2200 7th Street, 2126 7th Street, and 720 Lake Street; 0.30 PPV at the residential units on Grand View Street; 0.50 PPV at the MacArthur Park Elementary School for the Visual and Performing Arts; or as otherwise determined by the professional structural engineer to not result in structural damage, based on building conditions, soil conditions, and planned construction, demolition, or excavation methods. Such measures, as determined by the professional structural engineer, could include, but are not limited to, prohibiting the use of certain vibratory equipment in proximity to vibration-sensitive buildings, requiring the use of the lightest practical tracked or wheeled construction equipment, requiring the phasing of construction elements to avoid simultaneous operation of heavy vibration-generating equipment, requiring that the demolition of concrete be completed using non-impact methods (e.g., sawing), and requiring monitoring at applicable vibration-sensitive buildings during construction. ▪ Prepare and submit a report to the City's project manager that includes, but is not limited to, the description of pre- and post-construction conditions of all surveyed structures.	contractor to prepare a detailed vibration analysis; Identification of safe distances; Implementation of measures as specified in the plan; Structural repairs, if necessary			

Table 1 Mitigation Measures				
Mitigation Measure	**Monitoring/ Reporting Action**	**Timing of Implementation**	**Monitoring Responsibility**	**Verification of Compliance**
If construction-related vibration causes damage to a surveyed structure, the structural engineer will recommend necessary repairs based on the pre- and post-construction conditions (as documented in the structural engineer's report). The City's construction contractor will be responsible for remedying vibration-caused damage as a result of construction of the project to pre-construction conditions, as documented in the structural engineer's report. Such repairs must be undertaken and completed as required to conform to the Secretary of the Interior's Standards for the Treatment of Historic Properties (36 CFR Part 68), where applicable, and must apply the California Historical Building Code (24 CCR Part 8) and other applicable codes. The City will confirm that the contractor has completed all remedies associated with vibration impacts prior to close of the construction contract.				

Table 2 Project Commitments				
Project Commitment	**Monitoring/ Reporting Action**	**Timing of Implementation**	**Monitoring Responsibility**	**Verification of Compliance**
Hydrology/Water Quality				
Post-Construction Lake Monitoring Plan. Prior to the start of construction, LASAN shall develop a Post-Construction Lake Monitoring Plan to monitor lake water quality. The Plan will require monitoring of lake nutrient constituents for a 3-year period. Data from post-construction lake water quality monitoring will be collected and reported to RAP.	Completion of Post-Construction Lake Monitoring Plan to monitor lake water quality; Monitoring of lake nutrient constituents for a 3-year period	Prior to construction; Monitoring for a 3-year period post construction	LASAN	Completion of Plan; At the end of the 3-year monitoring period, LASAN and RAP will review the data collected and will determine if future monitoring is necessary
Tribal Cultural Resources				
TCR-1. Retain a Tribal Cultural Resources Monitor Prior to Commencement of Ground-Disturbing Activities. A. The lead agency shall retain a qualified monitor whose responsibility it will be to monitor construction activities for Native American tribal cultural resources (TCR). The monitor may be, but is not required to be, affiliated with a tribe that has ancestral ties to the project location as identified by the Native American Heritage Commission and that has engaged in consultation with the lead agency. In the case of this project, the only tribe that meets these criteria is the Gabrieleño Band of Mission Indians – Kizh Nation. The lead agency shall make a good faith effort to coordinate with the Gabrieleño Band of Mission Indians – Kizh Nation in the selection of the monitor. The monitor shall be retained prior to the commencement of any "ground-disturbing activity" for the subject project at all project locations (i.e., both on-site and any off-site locations that are included in the project description/definition and/or required in connection with the project, such as public improvement work). "Ground-disturbing activity" shall include, but is not limited to, the following: demolition, pavement removal, grading, excavation, and trenching. B. Prior to the commencement of monitoring, the lead agency and the Tribal Cultural Resources Monitor shall meet to agree upon the activities to be monitored and the conditions under which monitoring shall no longer be	Retention of a Tribal Cultural Resources Monitor following good faith effort to coordinate with designated tribe; Agreement between the lead agency and the TCR Monitor regarding the activities to be monitored and the conditions under which monitoring shall no longer be required; TCR monitoring during ground-disturbing activities	Prior to ground-disturbing activities; During ground-disturbing activities	City BOE; Tribal Cultural Resources Monitor	Contract specifications; Evidence that TCR Monitor was retained prior to ground-disturbing activities; Executed monitoring agreement submitted by the TCR Monitor; Field Inspections; Daily monitoring logs; Written confirmation regarding conclusion of onsite TCR monitoring

Table 2 Project Commitments				
Project Commitment	**Monitoring/ Reporting Action**	**Timing of Implementation**	**Monitoring Responsibility**	**Verification of Compliance**
required. This agreement will cover TCR monitoring during the actual time that such monitoring has the potential to identify disturbance to tribal cultural resources resulting from ground-disturbing activities, as defined in subsection A above. Such periods shall be determined by the daily log of onsite activities maintained by the construction contractor or a City of Los Angeles Department of Public Works inspector, or by another similar source. The lead agency or their representative shall provide access to the Tribal Cultural Resource Monitor during the remainder of the construction period–including during non-ground disturbing activities, or activities that are not within the scope of agreed-upon monitoring–however, such voluntary monitoring will not be subject to this agreement. C. A copy of the executed monitoring agreement shall be submitted by the Tribal Cultural Resources Monitor to the lead agency or their representative prior to the earlier of the commencement of any ground-disturbing activity, or the issuance of any permit necessary to commence a ground-disturbing activity. D. The monitor will complete daily monitoring logs that will provide descriptions of the relevant ground-disturbing activities, the type of construction activities performed, locations of ground-disturbing activities, soil types, cultural-related materials, and any other facts, conditions, materials, or discoveries of significance. Monitor logs will identify and describe any discovered TCRs, including but not limited to, Native American cultural and historical artifacts, remains, places of significance, etc., (collectively, TCRs), as well as any discovered Native American (ancestral) human remains and burial goods. Copies of monitor logs will be provided to the lead agency or their representative. E. On-site TCR monitoring subject to this agreement shall conclude upon the following: (1) written confirmation to the Tribal Cultural Resource Monitor from a designated point of contact for the lead agency that all ground-disturbing activities, as defined in subsection A above, and				

Table 2 Project Commitments				
Project Commitment	**Monitoring/ Reporting Action**	**Timing of Implementation**	**Monitoring Responsibility**	**Verification of Compliance**
phases that may involve ground-disturbing activities, on the project site or in connection with the project are complete; or (2) a determination and written notification by the Tribal Cultural Resource Monitor to the lead agency or their representative that no future, planned construction activity and/or development/construction phase at the project site possesses the potential to impact TCRs.				
TCR-2. Unanticipated Discovery of Tribal Cultural Resource Objects (Non-Funerary/Non-Ceremonial). Upon discovery of any TCRs, all construction activities in the immediate vicinity of the discovery shall cease (i.e., not less than the surrounding 50 feet) and shall not resume until the discovered TCR has been fully assessed by the Tribal Cultural Resources Monitor and/or archaeologist in accordance with State CEQA Guidelines Section 15064.5. The lead agency shall, in good faith, consult with the Tribal Cultural Resource Monitor and/or the Gabrieleño Band of Mission Indians – Kizh Nation on the disposition of any TCRs encountered. Any resulting data recovery reports shall be deposited with the California Historical Resources Regional Information Center or a legal repository, as appropriate.	Cessation of all construction activities upon discovery of any TCRs; Implementation of actions as specified in the mitigation measure	During construction	City BOE; Tribal Cultural Resources Monitor	Contract specifications; Field inspections
TCR-3. Unanticipated Discovery of Human Remains and Associated Funerary Objects. A. Native American human remains are defined in Public Resources Code Section 5097.98(d)(1) as an inhumation or cremation, and in any state of decomposition or skeletal completeness. Funerary objects, called associated grave goods in Public Resources Code Section 5097.98, are also to be treated according to this statute. B. If Native American human remains and/or grave goods are discovered or recognized on the project site, then Public Resource Code Section 5097.98 and Health and Safety Code Section 7050.5 shall be followed. Among other provisions, Health and Safety Code Section 7050.5 dictates that any discoveries of human skeletal material shall be immediately reported to the County Coroner and all ground-disturbing activities shall immediately halt and	Reporting of any discoveries of human skeletal material to the County Coroner; Halting of all ground-disturbing activities until the coroner has determined the nature of the remains; Implementation of actions as specified in the mitigation measure if Native American human remains and/or grave goods are discovered or recognized	During construction	City BOE; Tribal Cultural Resources Monitor	Contract specifications; Field inspections

Table 2 Project Commitments				
Project Commitment	**Monitoring/ Reporting Action**	**Timing of Implementation**	**Monitoring Responsibility**	**Verification of Compliance**
shall remain halted until the coroner has determined the nature of the remains. If the coroner recognizes the human remains to be those of a Native American or has reason to believe they are Native American, he or she shall contact, by telephone within 24 hours, the Native American Heritage Commission, and Public Resources Code Section 5097.98 shall be followed. C. Human remains and grave/burial goods shall be treated alike per Public Resources Code Section 5097.98(d)(1) and (2). D. Construction activities may resume in other parts of the project site in accordance with CEQA Guidelines Section 15064.5(f) at a distance from discovered human remains and/or burial goods to be determined by the Tribal Cultural Resource Monitor in consultation with the lead agency or their representative. The Tribal Cultural Resource Monitor shall provide the lead agency or its representative consent of that determination or justification why the monitor believes that construction activities may not resume in other parts of the project site. E. Preservation in place (i.e., avoidance) is the preferred manner of treatment for discovered human remains and/or burial goods. F. Any discovery of human remains/burial goods shall be kept confidential to prevent further disturbance.				

Table 3 Best Management Practices				
Best Management Practice	**Monitoring/ Reporting Action**	**Timing of Implementation**	**Monitoring Responsibility**	**Verification of Compliance**
Construction Staging and Fencing. Construction and staging areas will be closed to the public during construction activities. Temporary fencing shall be used around the perimeter of construction and staging areas. Staging will be phased to minimize impacts to the park to the extent feasible.	Installation of fencing around the perimeter of construction and staging areas prior to start of construction; Maintenance of fencing during construction; Development of a Staging Plan	Prior to the start of construction; During construction activities	City BOE	Completion of Staging Plan; Field inspection prior to the start of construction, followed by periodic field inspections during construction
Relocation of Unhoused Residents. Unhoused residents will be relocated and supported in accordance with the City of Los Angeles' Comprehensive Homeless Strategy and in coordination with City Council District 1 and appropriate agencies.	Site assessments to determine whether unhoused residents require relocation; Implementation of relocations in accordance the City's Comprehensive Homeless Strategy; Coordination of relocations with City Council District 1 and appropriate agencies	Prior to the start of construction	City BOE	Field inspection prior to the start of construction

This page intentionally left blank.

BUREAU OF ENGINEERING

MACARTHUR LAKE
STORMWATER CAPTURE PROJECT
PROJECT NO. S33WMLRP, S343MSWC, S043MSWC

ATTACHMENT 7
ENVIRONMENTAL COMPLIANCE PLAN

JANUARY 2026

City of Los Angeles
California

Department of Public Works
Bureau of Engineering

ENGINEERING
CITY OF LOS ANGELES

THIS PAGE INTENTIONALLY LEFT BLANK

MacArthur Lake Stormwater Capture Project

Environmental Compliance Plan (ECP)

Table of Contents

Table of Contents 2

List of Abbreviations 3

Contractor Responsibilities 6

Procedures & Communications 7

Environmental Compliance Requirements By Resource 8

- Biological Resources (MM-Bio-1): Protection Of Migratory Birds 8
- Cultural Resources (CR-1): Archaeological Resources – Pre-Construction Worker Training 10
- Cultural Resources (CR-2): Archaeological Resources – Monitoring 12
- Cultural Resources (CR-3): Paleontological Resources – Pre-Construction Worker Training 15
- Cultural Resources (CR-4): Archaeological Resources – Monitoring 17
- Noise And Vibration (MM-NV-1): Construction Noise Control And Mitigation Plan 19
- Noise And Vibration (MM-NV-1): Construction Vibration Control And Mitigation Plan 23

Submittal Schedule Summary 26

Best Management Practices 28

ECP Personnel Responsibility 32

List of Abbreviations

AHJ: Authority Having Jurisdiction
BACT: Best Available Control Technology
BCA: Bureau of Contract Administration (Inspector)
BGS: Below Ground Surface
BMP: Best Management Practice
BOE: Bureau of Engineering
BOE Contractor: Prime Contractor as defined in General Conditions Article 00010 and as further specified in the General Conditions of the Contract Documents
City: City of Los Angeles
CARB: California Air Resource Board
DPW: City of Los Angeles Department of Public Works
DTSC: Department of Toxic Substances Control
EIR: Environmental Impact Report
ECL: Environmental Compliance Lead
ECP: Environmental Compliance Plan
EPA: Environmental Protection Agency
ETP: Excavation Transportation Plan
HASP: Health & Safety Plan
HAZWOPER: Hazardous Water Operations & Emergency Response
LACoFD: Los Angeles County Fire Department
LADWP: Los Angeles Department of Water & Power
LCP: Lead Compliance Plan
MMP: Mitigation Monitoring Program
NFA: No Further Action
PCB: Polychlorinated Biphenyls
PPE: Personal Protective Equipment
QSD: Qualified SWPPP Developer
QSP: Qualified SWPPP Practitioner
RAP: City of Los Angeles Department of Recreation and Parks
RCRA: Resource Conservation & Recovery Act
ROW: Right of Way
SCAQMD: Southern California Air Quality Management Division
SMU: Site Mitigation Unit
SVE: Soil Vapor Extraction
SWPPP: Stormwater Pollution Prevention Plan

TPH: Total Petroleum Hydrocarbons
USA: Underground Service Alert
VOCs: Volatile Organic Compounds Purpose

The Environmental Compliance Plan (ECP) provides the framework for Contractors to demonstrate how they will comply with the environmental requirements of the MacArthur Lake Stormwater Capture Project (Project) including the Mitigation Monitoring Program (MMP) as provided in the Projects Environmental Impact Report (EIR).

The ECP focuses on integrating environmental compliance into the Contractor's daily workflow requiring Contractors to explain what specific steps will be taken to comply with mitigation measures and best management practices, when these steps occur in the project schedule and workflow, and how compliance will be documented and communicated to the City of Los Angeles (City), Department of Public Works (DPW), Bureau of Engineering (BOE).

Contractor Responsibilities

To be considered for award of the contract, the Contractor is required to acknowledge that they have reviewed and agree to comply with the mandatory environmental mitigation measures, by signing the "Acknowledgement of and Agreement To Comply With Mandatory Environmental Mitigation Measures" form.

1. Acknowledge each relevant mitigation measure and Best Management Practice (BMP) for the Project.
2. Identify Responsible Parties within their organization.
    a. (Project Manager, Superintendent, Environmental Compliance Lead (ECL), Safety Officer, etc.).
    b. The ECL shall have the authority by the Contractor to immediately stop or modify any construction activity that is determined to be out of compliance with environmental requirements. The ECL shall be available and reachable by phone during all hours of construction activity.
3. Integrate environmental compliance into the construction workflow, including submittals, scheduling, construction, and reporting.
4. Coordinate with the BOE to retained qualified professionals (biologists, archaeologists, paleontologists, tribal monitors) and for timing of surveys, monitoring, and training.
5. Submit required documentation as specified in bid specs and in this ECP framework.
6. Implement corrective actions promptly if non-compliance occurs.

Procedures & Communications

The Contractor shall provide written procedures showing how environmental compliance responsibilities will be managed throughout the duration of the Contact. At a minimum, the Contractor's procedures shall include:

Identification of Responsible Parties: Who is responsible for preparing, reviewing, and submitting compliance documentation.

Submittal Process: When and how documents will be submitted. Methods and timing for required lists, certifications, logs, and other documents to BOE.

Corrective Action Protocols – Steps to take if non-compliance occurs. Procedures for responding to, reporting, documenting, and resolving.

Environmental Compliance Requirements by Resource

Biological Resources (MM-Bio-1): Protection of Migratory Birds

Mitigation Measure Requirements:

- If construction or maintenance activities that require the removal of trees or vegetation are scheduled to occur during the nesting season for birds/raptors (January 1 to September 15), tree or vegetation removal for the proposed project shall be conducted outside the bird nesting season, if feasible.
- If it is not feasible to schedule tree or vegetation removal outside of the bird nesting season and prior to implementation of construction or maintenance activities that could result in removal of or disturbances to vegetation providing bird nesting habitat during the bird nesting season (January 1 through September 15), the following shall occur:
    - A qualified biologist shall conduct a pre-construction biological survey 72 hour prior to vegetation/ground disturbance activities during the bird nesting season (January 15 through September 15).
        - Survey within 100 ft. of work areas (300 ft. for raptor habitat).
        - Repeat survey if construction pauses ≥7 days.
    - If an active bird nest is located within the construction area, or in the vicinity, and the qualified biologist determines that the bird nest may be impacted, an appropriate no-work buffer area will be established by the biologist, in consultation with CDFW and the City of Los Angeles Department of Recreation and Parks (RAP) Forestry Division, based on the species, the type of construction activities, and other considerations.
        - Tree or vegetation removal within the no-work buffer area and other construction activities as determined by the biologist will be postponed until the nest is vacated and juveniles have fledged (minimum of 6 weeks after egg laying) and when there is no evidence of a second attempt at nesting.
    - The qualified biologist shall serve as a construction monitor during those periods when construction activities will occur near active nest areas to ensure that no inadvertent impacts on these nests shall occur.

Contractor ECP

Who: ECL

What: The ECL shall coordinate with the BOE and retain a qualified biologist to schedule the pre-construction biological survey.

When: The ECL shall submit the construction and pre-construction biological survey schedule to BOE two week prior to mobilization; and provide the BOE with biological survey report and monthly monitoring logs.

How: The ECL shall have recordkeeping documentation available at the construction worksite and with the BOE for record keeping.

Phase	Responsibilities	Submittal Process	Protocols
Bid & Award	The contractor shall acknowledge the pre-construction biological survey and monitoring requirements and designate the point of contact for the coordination of the pre-construction biological survey with the qualified biologist.	Submit in bid package.	If no acknowledgement, Contractor risks disqualification.
Pre-Construction	The ECL shall retain a qualified biologist and provide the BOE with the anticipated construction schedule to coordinate and schedule the pre-construction biological survey.	Submit two weeks before mobilization. The BOE to review and approve.	The BOE to share qualified biologist contact information. Any vegetation removal conducted prior to surveys must be halted and reported immediately.
Construction	The ECL shall contact the BOE for another nesting biological survey if there is an expected break of 7 days or more in construction activities. The ECL shall submit monthly monitoring logs to the BOE.	Submit monthly monitoring logs to the BOE. Logs to be submitted by the 5th of the following month.	Stop-work or non-compliance incidents must be documented, and corrective action report submitted to the BOE within 3 business days.

Contractor Acknowledgement Initial here:_____

Cultural Resources (CR-1): Archaeological Resources – Pre-Construction Worker Training

Mitigation Measure Requirements:

Prior to the commencement of ground disturbing activities, a qualified archaeologist shall be retained to provide construction personnel with a briefing in the identification of archaeological resources and information on regulatory requirements for the protection of cultural resources. The briefing shall include examples of cultural resources (i.e., archaeological, Native American, and paleontological resources) that may be onsite and protocols to follow if discoveries are made. The archaeologist shall develop the training program and any supplemental materials necessary for its implementation.

Contractor ECP

Who: ECL

What: The ECL shall coordinate with the BOE and retain a qualified archaeologist to conduct an Archeological Resources Pre-Construction Worker Training.

When: The ECL shall coordinate and schedule the Archeological Resources Pre-Construction Worker Training for construction work staff prior to the commencement of work. The contractor shall also submit construction schedule two weeks prior to mobilization.

How: The ECL shall record the attendance of the Archeological Resources Pre-Construction Worker Training. The attendance records shall be made available at the construction worksite and with the BOE for recordkeeping.

Phase	Responsibilities	Submittal Process	Protocols
Bid & Award	The contractor shall acknowledge the requirement to conduct an Archeological Resources Pre-Construction Worker Training.	Submit in bid package.	If no acknowledgement, Contractor risks disqualification.
Pre-Construction	The ECL shall ensure all construction staff workers receive the Archeological Resources Pre-Construction Worker Training. The contractor shall also record attendance of all participates in the Archeological Resources Pre-Construction Worker Training and submit attendance records to the BOE.	Submit attendance records to BOE two weeks before mobilization. BOE to review and approve.	The BOE to share qualified archaeologist contact information.

Construction	The ECL shall ensure construction personnel attends training and document attendees. New construction personnel shall also receive and document training.	Submit attendance records to BOE two weeks before start of work.	The BOE must receive the attendee training list at the 5th of the following month.

Contractor Acknowledgement Initial here: _____

Cultural Resources (CR-2): Archaeological Resources – Monitoring

Mitigation Measure Requirements:

Prior to initiation of any project-related grading or excavation activities, a qualified archaeologist and an archaeological monitor under the archaeologist's direction shall be retained to provide monitoring during ground disturbing (i.e., excavation) activities in native soils.

Resource Identification: During construction, should subsurface archaeological resources be discovered, all activity within 50 feet of the find shall stop and the qualified archaeologist shall assess the significance of the find in accordance with State CEQA Guidelines Section 15064.5. Work shall not resume in the direct area of the discovery until it is assessed by the archaeologist and they indicate that construction can resume.

Resource Evaluation and Recovery: If any find is determined to be significant, the archaeologist shall determine, in consultation with the implementing agency, appropriate avoidance measures or other appropriate mitigation. Per State CEQA Guidelines Section 15126.4(b)(3), preservation in place shall be the preferred means to avoid impacts to archaeological resources qualifying as historical resources. Consistent with State CEQA Guidelines Section 15126.4(b)(3)(C), if it is demonstrated that resources cannot be avoided, the qualified archaeologist shall develop additional treatment measures, such as data recovery or other appropriate measures, in consultation with the implementing agency, as applicable. When data recovery through excavation is the only feasible mitigation, a data recovery plan, which makes provisions for adequately recovering the scientifically consequential information from and about the historical resource, shall be prepared by the archaeologist prior to any excavation of the resource being undertaken. Any resulting data recovery reports shall be deposited with the California Historical Resources Regional Information Center or a legal repository. If an archaeological site does not qualify as a historical resource but meets the criteria for a unique archaeological resource as defined in Section 21083.2 of the Public Resources Code, then the site shall be treated in accordance with the provisions of Section 21083.2.

Human Remains: If human remains are encountered at any point during project excavation, the contractor shall immediately cease all work on the project until the coroner deems it appropriate to resume. All procedures before and after the human remains are removed shall follow applicable laws and regulations, including Health and Safety Code Section 7050.5 and Public Resources Code Section 5097.98.

Reporting and Curation: Reporting shall be completed in conformance with the guidelines set forth by the California Department of Parks and Recreation Office of Historic Preservation for Archaeological Research Management Reports. Proper curation and archiving of artifacts shall be conducted in accordance with regulatory requirements and industry standards. Within three months of the completion of monitoring, a compliance report shall be submitted to the implementing agency that summarizes the monitoring efforts, including any artifacts that have

been processed. The final report shall be submitted to the South Central Coastal Information Center.

Contractor ECP

Who: ECL

What: The ECL shall coordinate with the BOE and retain a qualified archaeologist and an archaeological monitor to perform archaeological monitoring including the implementation of actions for resource identification, resource evaluation and recovery, human remains, and reporting and curation. The archaeological monitor shall be under the direction of the qualified archaeologist.

When: Prior to construction, the ECL shall submit the construction schedule two weeks prior to mobilization. The contractor shall also ensure archaeological monitoring is conducted during ground disturbing activities by the qualified archaeologist and complete monthly monitoring logs.

How: The ECL shall ensure the qualified archaeologist completes monthly monitoring logs of all archaeological monitoring activities. The contractor shall submit the monthly monitoring logs to the BOE by the 5th of the following month. The contractor shall document all stop-work incidents and submit an incident report to the BOE within 3 business days.

Phase	Responsibilities	Submittal Process	Protocols
Bid & Award	The contractor shall acknowledge the requirement to retain a qualified archaeologist and conduct archaeological monitoring.	Submit in bid package.	If no acknowledgement, Contractor risks disqualification.
Pre-Construction	The ECL shall submit the construction schedule prior to mobilization. The contractor shall retain a qualified archaeologist prior to mobilization.	Submit the construction schedule to the BOE two weeks before mobilization. The BOE to review and approve.	The BOE to share qualified archaeologist contact information.
Construction	The ECL shall ensure the archaeological monitoring is conducted during ground disturbing activities. The ECL shall document all archeological monitoring activities in monthly monitoring logs.	Submit monthly monitoring logs to the BOE by the 5th of the following month.	The BOE must receive report of any stop-work/non-compliance incident within 3 business days.

Contractor Acknowledgement Initial here: _____

Cultural Resources (CR-3): Paleontological Resources – Pre-Construction Worker Training

Mitigation Measure Requirements:

Prior to the commencement of ground disturbing activities, a qualified paleontologist shall be retained to create a Worker's Environmental Awareness Program pamphlet that will be provided as training to construction personnel to understand regulatory requirements for the protection of paleontological resources. This training shall include examples of paleontological resources to be aware of in the vicinity and protocols to follow if discoveries are made. The paleontologist shall develop the pamphlet and any supplemental materials necessary to implement the program.

Contractor ECP

Who: ECL

What: The ECL shall coordinate with the BOE and retain a qualified paleontologist to create a Worker's Environmental Awareness Program (WEAP) training pamphlet.

When: The ECL shall submit the construction schedule to the BOE two week prior to mobilization. The contractor shall also distribute the WEAP training pamphlet to all construction personnel prior to commencement of work.

How: The ECL shall record the issuance of the WEAP training pamphlet to all construction personnel and submit the record of issuance to the BOE two weeks prior to commencement of work. The record of issuance shall be made available at the construction worksite and with the BOE for recordkeeping.

Phase	Responsibilities	Submittal Process	Protocols
Bid & Award	The contractor shall acknowledge the requirement to retain a qualified paleontologist to create a WEAP training pamphlet for all construction personnel.	Submit in bid package.	If no acknowledgement, Contractor risks disqualification.
Pre-Construction	The ECL shall ensure all construction personnel receive the WEAP training pamphlet. The ECL shall also record the issuance to construction personnel and submit record of issuance to the BOE.	Submit record of issuance to the BOE two weeks before mobilization. BOE to review and approve.	The BOE to share qualified paleontological contact information.
Construction	New construction personnel shall also receive the WEAP training	Submit record of issuance to BOE	The BOE must receive the

	pamphlet. The ECL shall record the issuance of the WEAP training pamphlet.	two weeks before start of work.	issuance of the WEAP training pamphlet at the end of every month.

Contractor Acknowledgement Initial here: _____

Cultural Resources (CR-4): Archaeological Resources – Monitoring

Mitigation Measure Requirements:

Prior to initiation of any project-related grading or excavation activities, a qualified paleontologist and a paleontological monitor under the paleontologist's direction shall be retained. The paleontological monitor shall monitor all excavation in native soils.

Monitoring. Monitoring will entail the visual inspection of excavated or graded areas as well as trenching, sidewalls, and entrance/exit pits during project excavation. If no significant fossils have been exposed, the paleontologist may determine that full time monitoring is no longer necessary, and periodic spot checks or no further monitoring may be recommended.

Resource Identification, Evaluation, and Recovery. If a paleontological resource is encountered when a monitor is not onsite, all construction shall cease within at least 50 feet of the discovery and the paleontologist or paleontological monitor shall be notified immediately. If the monitor is present at the time of discovery, then the monitor will have the authority to temporarily divert the construction equipment around the find until it is assessed for scientific significance. Work shall not resume in the direct area of the discovery until it is assessed, and the paleontologist indicates that construction can resume. If the resource is found to be significant, the paleontologist shall systematically remove and stabilize the specimen(s) in anticipation of preservation. If necessary, soil samples will be collected per Society of Vertebrate Paleontologists standards. After basic laboratory analysis and cataloging has been completed, the specimen(s) shall be curated at a qualified research facility, such as the Los Angeles County Natural History Museum or other legal repository. Within three months of the laboratory analysis, a compliance report shall be submitted to the implementing agency that summarizes the efforts and result. The final report shall be submitted to the Los Angeles County Natural History Museum or other legal repository.

Contractor ECP

Who: ECL

What: The ECL shall coordinate with the BOE and retain a qualified paleontologist and a paleontological monitor to perform paleontological monitoring including monitoring of grading or excavation activities by the qualified paleontologist and the implementation of actions for resource identification, evaluation and recovery. The paleontological monitor shall be under the direction of the qualified paleontologist.

When: Prior to construction, the ECL shall submit the construction schedule two weeks prior to mobilization. The contractor shall also ensure paleontological monitoring is conducted during grading or excavation activities by the qualified paleontologist and complete monthly monitoring logs.

How: The ECL shall ensure the qualified paleontologist completes monthly monitoring logs of all paleontological monitoring activities. The contractor shall submit the monthly monitoring logs to the BOE by the 5th of the following month. The contractor shall document all stop-work incidents and submit an incident report to the BOE within 3 business days.

Phase	Responsibilities	Submittal Process	Protocols
Bid & Award	The contractor shall acknowledge the requirement to retain a qualified paleontologist and conduct paleontological monitoring.	Submit in bid package.	If no acknowledgement, Contractor risks disqualification.
Pre-Construction	The ECL shall submit the construction schedule prior to mobilization. The contractor shall retain a qualified paleontologist prior to mobilization.	Submit the construction schedule to the BOE two weeks before mobilization. The BOE to review and approve.	The BOE to share qualified paleontologist contact information.
Construction	The ECL shall ensure the paleontological monitoring is conducted during grading or excavation activities. The ECL shall document all paleontological monitoring activities.	Submit monthly monitoring logs to the BOE by the 5th of the following month.	The BOE must receive report of any stop-work/non-compliance incident within 3 business days.

Contractor Acknowledgement Initial here: _____

Noise and Vibration (MM-NV-1): Construction Noise Control and Mitigation Plan

Mitigation Measure Requirements:
The contractor shall develop a noise control plan to address construction equipment noise at noise-sensitive uses where construction noise impacts may be significant. The noise control plan must be approved by the BOE prior to implementation and will require the contractor to specify noise-reducing construction measures and practices that will be employed to reduce noise from construction activities to the maximum extent feasible. Measures that can be used to limit construction-related noise include, but are not limited to, the following:

Construction hours. Limit construction to the hours of 7:00 a.m. to 9:00 p.m. on weekdays and between 8:00 a.m. and 6:00 p.m. on Saturdays, and prohibit construction equipment noise anytime on Sundays and holidays. Prevent construction personnel from being on the project site (including laydown and storage areas), and prohibit material or equipment deliveries and collections, during the prohibited hours.

Construction equipment. Properly muffle and maintain all construction equipment powered by internal combustion engines. Ensure that all construction equipment powered by gasoline or diesel engines has sound control devices that are at least as effective as those originally provided by the manufacturer and that all equipment is operated and maintained to minimize noise generation.

Stationary equipment. Locate stationary noise-generating construction equipment, such as air compressors and portable power generators, as far as practical from existing noise-sensitive land uses; muffle and enclose such equipment within temporary enclosures and shielded by barriers, to the extent feasible.

Quiet equipment. Use the quietest equipment available, equip internal combustion powered equipment with properly operating mufflers, and keep equipment in tune to avoid backfires. In addition, if exposed, fit engines with protective shrouds to reduce motor noise.

Electrical power. Use local electrical grid-power when feasible to avoid the use of portable generators.

Temporary noise barriers. Erect temporary noise attenuation barriers adjacent to stationary construction equipment directly between the equipment and noise-sensitive use, where necessary and feasible. Shield construction equipment that is to be stationary for extended periods (e.g., compressors, generators), if appropriate, by erecting temporary noise attenuation barriers. Evaluate the need for, and feasibility of, noise attenuation barriers on a case-by-case basis considering the distance to noise-sensitive receptors, the available space at the construction location, and safety and operational considerations. If used, install the barriers directly between the equipment and the nearest noise-sensitive use to the construction site.

Noise enclosures. Use noise-reducing enclosures around noise-generating equipment that has the potential to disturb nearby off-site land uses or where otherwise necessary to comply with City Code noise limits for receiving zones.

Noise Best Available Control Technology (BACT). Ensure that equipment and trucks used for project construction use the best available noise control techniques (e.g., improved mufflers, equipment redesign, intake silencers, ducts, engine enclosures, and acoustically attenuating shields or shrouds) wherever feasible

Noise signals. Use noise-producing signals (e.g., horns, whistles, alarms, and bells) for safety warning purposes only.

Impact tools. Power impact tools (e.g., pavement breakers) for project construction hydraulically or electrically (where feasible) to avoid noise associated with compressed air exhaust from pneumatically powered tools. However, where use of pneumatic tools is unavoidable, use an exhaust muffler on the compressed air exhaust. Use quieter procedures, such as drills rather than impact equipment, where feasible.

Regulatory compliance. Ensure that all construction equipment used on the proposed project that is regulated for noise by a local, state, or federal agency complies with such regulation while in the course of project activity and use on-site.

Noise-considerate operation training. Train construction employees in the proper operation and use of the equipment. (Careless or improper operation or inappropriate use of equipment can increase noise levels. Poor loading, unloading, excavation, and hauling techniques are examples of how a lack of adequate guidance and training may lead to increased noise levels.)

Noise-considerate staging and laydown. Store construction equipment on the project site or designated laydown areas while in use, to the extent feasible. This will eliminate noise associated with repeated transportation of the equipment to and from the site.

Noise monitoring. Monitor the effectiveness of noise attenuation measures by taking noise measurements.

In addition to these measures, prior to the start of construction, the contractor will develop a list of measures for controlling noise and for responding to and tracking complaints pertaining to construction noise. These measures include:

- Identification of measures that will be implemented to control construction noise.
- Identification of locations where it is infeasible to limit noise to be in compliance with applicable City standards.
- Procedure and phone numbers for notifying the City Department of Health or the Police Department (for complaints).
- Designation of a disturbance coordinator for responding to noise complaints, with their

name and telephone complaint number to be clearly posted at the construction site; the telephone must be answered at all times during construction.

- Plan for notification of neighboring noise-sensitive land uses and non-residential building managers—within 300 feet of the project construction area at least 30 days in advance of high noise-generating activities (defined as activities that generate noise levels of 90 dBA or greater at 50 feet from the source)—regarding the estimated duration of activity and the associated control measures that will be implemented to reduce noise levels.

Contractor ECP

Who: ECL

What: The ECL shall develop and implement a project-specific Construction Noise Control and Mitigation Plan for approval by the BOE. The ECL shall implement measures specified in the plan. The ECL shall also establish noise complaint procedures, designate a disturbance coordinator and post their name the complaint telephone number onsite, and notify neighboring noise-sensitive land uses and building managers.

When: Prior to the commencement of work, the ECL shall submit a Construction Noise Control and Mitigation Plan to BOE for approval. In addition, the ECL shall provide notification to neighboring noise-sensitive land uses and non-residential building managers—within 300 feet of the project construction area at least 30 days in advance of high noise-generating activities.

How: The ECL shall document and submit to the BOE noise complaint log and provide documentation of notifications to neighboring land uses specified in mitigation measure. Any non-compliance incidents must be reported to the BOE within three business days.

Phase	Responsibilities	Submittal Process	Protocols
Bid & Award	The contractor shall acknowledge the requirement to develop and implement a Construction Noise Control and Mitigation Plan.	Submit in bid package.	If no acknowledgement, Contractor risks disqualification.
Pre-Construction	The ECL shall submit the Construction Noise Control and Mitigation Plan to BOE for approval. The ECL shall notify neighboring noise-sensitive land uses and non-residential building managers—within 300 feet of the project construction area at least 30 days in advance of high noise-generating activities.	Prior to commencement of work, submit the Construction Noise Control and Mitigation Plan to the BOE for review and approval. Submit documentation of notifications to	N/A

		BOE two weeks before mobilization.	
Construction	The ECL shall document and respond to noise complaints and implement appropriate noise control measure to address noise complaints. The ECL shall document all noise complaints.	Submit monthly noise complaint logs to the BOE on the 5th of following month.	Report of any noise non-compliance incident within 3 business days.

Contractor Acknowledgement Initial here: _____

Noise and Vibration (MM-NV-1): Construction Vibration Control and Mitigation Plan

Mitigation Measure Requirements:

The contractor shall prepare and implement a project-specific Construction Vibration Control and Mitigation Plan. Specifically, prior to construction of project elements that would result in significant vibration impacts to nearby structures, the contractor shall retain a professional structural engineer with experience in structural vibration analysis to perform the following tasks:

- Review the project plans to determine the potential construction impact zone and conduct pre- and post-construction surveys of the structures that would be subject to significant vibration to document the pre- and post-construction conditions of the surveyed structures.
- Prepare a detailed vibration analysis demonstrating that the use of vibratory equipment at the construction site boundary closest to adjacent vibration-sensitive buildings would not result in the potential for building damage. This analysis will take into account other projects whose construction may be planned in the immediate project area and that might overlap with construction of the proposed project. The analysis must detail the safe distances or measures to be undertaken at which the anticipated construction equipment can operate without resulting in vibration levels greater than 0.10 PPV (inches per second) at the buildings located at 2228 7th Street, 2200 7th Street, 2126 7th Street, and 720 Lake Street; 0.30 PPV at the residential units on Grand View Street; 0.50 PPV at the MacArthur Park Elementary School for the Visual and Performing Arts; or as otherwise determined by the professional structural engineer to not result in structural damage, based on building conditions, soil conditions, and planned construction, demolition, or excavation methods. Such measures, as determined by the professional structural engineer, could include, but are not limited to, prohibiting the use of certain vibratory equipment in proximity to vibration-sensitive buildings, requiring the use of the lightest practical tracked or wheeled construction equipment, requiring the phasing of construction elements to avoid simultaneous operation of heavy vibration-generating equipment, requiring that the demolition of concrete be completed using non-impact methods (e.g., sawing), and requiring monitoring at applicable vibration-sensitive buildings during construction.
- Prepare and submit a report to the BOE that includes, but is not limited to, the description of pre- and post-construction conditions of all surveyed structures.

If construction-related vibration causes damage to a surveyed structure, the structural engineer will recommend necessary repairs based on the pre- and post-construction conditions (as documented in the structural engineer's report). The contractor will be responsible for remedying vibration-caused damage as a result of construction of the project to pre-construction conditions, as documented in the structural engineer's report. Such repairs must be undertaken and completed as required to conform to the Secretary of the Interior's

Standards for the Treatment of Historic Properties (36 CFR Part 68), where applicable, and must apply the California Historical Building Code (24 CCR Part 8) and other applicable codes. The BOE will confirm that the contractor has completed all remedies associated with vibration impacts prior to close of the construction contract.

Contractor ECP

Who: ECL

What: The ECL shall prepare and implement a project-specific Construction Vibration Control and Mitigation Plan. The ECL shall also retain a professional structural engineer with experience in structural vibration analysis to prepare a detailed vibration analysis, identify safe distances. The ECL shall implement all measures as specified in the plan including structural repairs, if necessary.

When: Prior to the commencement of work, the ECL shall submit a Construction Vibration Control and Mitigation Plan and report detailing the description of pre- and post-construction conditions of all surveyed structures.

How: The ECL shall Report of pre- and post-construction conditions of all surveyed structures and provide documentation of repairs, if applicable

Phase	Responsibilities	Submittal Process	Protocols
Bid & Award	The contractor shall acknowledge the requirement to develop and implement a Construction Vibration Control and Mitigation Plan.	Submit in bid package.	If no acknowledgement, Contractor risks disqualification.
Pre-Construction	The ECL shall retain a professional structural engineer. The ECL shall submit the Construction Vibration Control and Mitigation Plan and report detailing the description of pre-construction conditions of all surveyed structures to BOE for approval.	Prior to commencement of work, submit the Vibration Control and Mitigation Plan and report detailing the description of pre-construction conditions of all surveyed structures to the BOE for review and approval.	N/A

Construction	The ECL shall document structural damage caused by construction related vibration.	Submit monthly report of structural damage caused by construction related vibration by the 5 the following month.	Report of any vibration non-compliance incident within 3 business days.
Post-Construction	The ECL shall submit a report detailing the description post-construction conditions of all surveyed structures to BOE for approval.	Submit a report detailing the description of post-construction conditions of all surveyed structures to the BOE for review and approve.	Submit report to the BOE on the 5th of the following month after the completion of work.

Contractor Acknowledgement Initial here: _____

Submittal Schedule Summary

Phase	Submittal	Due Date
Bid & Award	1. Acknowledgement of environmental measures	1. With bid package (If no acknowledgement, Contractor risks disqualification).
Pre-Construction	1. Anticipated construction schedule 2. Schedule Pre-Construction Biological Survey 3. Retain a Qualified Archeologist 4. Record of attendance for the Archeological Resources Pre-Construction Worker Training 5. Retain a Qualified Paleontologist 6. Record of issuance for the distribution of the Paleontological WEAP training pamphlet 7. Construction Noise Control and Mitigation Plan 8. Documentation of Notification to neighboring noise-sensitive land uses and non-residential building managers 9. Retain a Professional Structural Engineer 10. Construction Vibration Control and Mitigation Plan 11. Pre-Construction Structural Conditions Report	1. Two weeks before mobilization 2. TBD 3. Two-week before mobilization 4. Two weeks before mobilization 5. Two-week before mobilization 6. Two-week before mobilization 7. Prior to commencement of work 8. Two-week before mobilization 9. Prior to commencement of work 10. Prior to commencement of work 11. Prior to commencement of work
Construction	1. Additional Biological Survey	1. Prior to restart of work

	2. Monthly Monitoring Logs (Biological) 3. Stop-work/Non-Compliance Incident Report (Biological) 4. Record of attendance for new construction personnel (Archeological) 5. Monthly Monitoring logs (Archeological) 6. Stop-work/Non-Compliance Incident Report (Archeological) 7. Record of attendance for new construction personnel (Paleontological) 8. Monthly Monitoring logs (Paleontological) 9. Stop-work/Non-Compliance Incident Report (Paleontological) 10. Monthly Noise Complaint Logs (Noise) 11. Non-Compliance Incident Report (Noise) 12. Monthly report of structural damage caused by construction related vibration (Vibration) 13. Non-Compliance Incident Report (Vibration)	2. By the 5th of following month 3. Within three business days of incident 4. By the 5th of the following month 5. By the 5th of the following month 6. Within three business days of incident 7. By the 5th of the following month 8. By the 5th of the following month 9. Within three business days of incident 10. By the 5th of the following month 11. Within three business days of incident 12. By the 5th of the following month 13. Within three business days of incident
Post-Construction	1. Post-Construction Structural Conditions Report	1. By the 5th of the following month after the completion of work

Contractor Acknowledgement Initial here: _____

Best Management Practices

BMP-AQ-1 Construction Equipment Maintenance:

Timeframe: Duration of Construction

Responsible Party: BOE-Contractor

Monitoring Agency: City DPW BOE

Monitoring Period: Monthly Monitoring

Verification of Compliance: BOE-Contractor will provide documentation by the 5th of the following month

- All construction equipment will receive regular maintenance and tune ups according to the manufacturer's recommendations.
- Detailed records will be maintained of services performed.
- Copies of records to be forward to when updated.
- Stop construction activities during Stage II smog alerts which will be announced to the CONTRACTOR by the ENGINEER.
- Reduce construction equipment emissions by shutting off all equipment not in actual use.
- Reduce construction-related traffic congestion.
- Provide rideshare incentives for construction personnel.
- Tune and maintain construction equipment properly.
- Use low sulfur/low nitrogen fuel for construction equipment, if available.
- Provide transit incentives for construction personnel.

BMP-AQ-2: Fugitive Dust and Erosion Control Plan (FDECP)

Timeframe: Duration of Construction

Responsible Party: BOE-Contractor

Monitoring Agency: City DPW BOE

Monitoring Period: Monthly Monitoring

Verification of Compliance: BOE-Contractor will provide documentation by the 5th of the following month

- All construction activities will be consistent with SCAQMD rules & regulations.
- SCAQMD signs to be posted and photo documentation to be provided to BOE.

BMP-GHG-1 Off Road Equipment Construction Requirements:

Timeframe: Duration of Construction

Responsible Party: BOE-Contractor

Monitoring Agency: City DPW BOE

Monitoring Period: Monthly Monitoring

Verification of Compliance: BOE-Contractor will provide documentation by the 5th of the following month

- BOE-Contractor will ensure no equipment idles longer than 5 minutes except when needed to perform work.

BMP-HYDRO-1 Good Site Management, or "housekeeping":

Timeframe: Duration of Construction

Responsible Party: BOE-Contractor

Monitoring Agency: City DPW BOE

Monitoring Period: Weekly Monitoring

Verification of Compliance: BOE-Contractor will provide documentation by the 5th of the following month

- Do not leave trash/waste.
- Stay within the required work areas.
- Do not dispose of excess material over slopes.
- Provide secondary containment for portable toilets.
- All trash enclosures and bins will be covered at all times and will be emptied as needed to eliminate overflow, preventing lids from closing.
- BOE-Contractor has a crew designated to conduct daily clean-up of trash and debris on the Project site.
- Conduct and inventory of products and protect products from exposure to stormwater.
- Implement BMPs to control the off-site tracking of sediment and loose construction and landscape materials.
- Store chemicals in watertight containers with appropriate secondary containment to prevent any spillage or leakage or store in a completely enclosed storage area.
- Secure and contain concrete washout areas and other washout areas that may contain additional pollutants. Washout areas shall be covered prior to and during a precipitation event.
- No equipment or vehicle washing onsite.

BMP-HYDRO-2 Erosion and Sediment Controls:

Timeframe: Duration of Construction

Responsible Party: BOE-Contractor

Monitoring Agency: City DPW BOE

Monitoring Period: Weekly Monitoring

Verification of Compliance: BOE-Contractor will provide documentation by the 5th of the following month

- Avoid working during precipitation events.
    - Monitor the weekly forecast.

- Prevent sediment in stormwater runoff.
- Preserve existing vegetation to maximum extent possible.
- Protect stockpiles when not in use and during rain events.
- Implement effective wind erosion control.
- Establish and maintain effective perimeter controls.
- Stabilize all construction entrances and exists to sufficiently control erosion and sediment discharges from the site.

BMP-HYDRO-3 Spill Prevention and Control:

Timeframe: Duration of Construction

Responsible Party: BOE-Contractor

Monitoring Agency: City DPW BOE

Monitoring Period: Weekly Monitoring

Verification of Compliance: BOE-Contractor will provide documentation by the 5th of the following month

- All vehicles shall be equipped with a spill kit.
- Place drip pans under idle vehicles and equipment (between shifts/overnight).
- Inspect vehicles and equipment regularly for leaks.
- Place all equipment and vehicles to be fueled, maintained, or stored in a designated area with BMPs installed. Minimize vehicle and equipment fueling on site.
- Contain fuel, grease, and oil to prevent them from leaking into the ground, storm drains, or surface waters.
- Cleanup spills immediately and dispose of material properly with other hazardous waste.

BMP-HYDRO-4 Common Area Catch Basin Inspection:

Timeframe: Duration of Construction

Responsible Party: BOE-Contractor

Monitoring Agency: City DPW BOE

Monitoring Period: Weekly Monitoring

Verification of Compliance: BOE-Contractor will provide documentation by the 5th of the following month

- BOE-Contractor will inspect and maintain catch basins on a regular basis and prior to any rain event.
- QSP performs weekly and pre, during, and post-rain event inspections, documentation to be provided to the BOE.

BMP-HYDRO-5 Regulatory Requirements for Water Quality:

Timeframe: Duration of Construction

Responsible Party: BOE-Contractor

Monitoring Agency: City DPW BOE

Monitoring Period: Weekly Monitoring

Verification of Compliance: BOE-Contractor will provide documentation by the 5th of the following month

- BOE-Contractor shall comply with SWPPP issued for the project.
- BOE-Contractor will implement and maintain all requirements of the approved SWPPP.
- Weekly inspections performed by QSP, documentation to be provided to the BOE.
- Annual permits and reports to be submitted and documentation provided to the BOE.

BMP-Staging-1: Construction Staging & Construction Staging Area:

Timeframe: Duration of Construction

Responsible Party: BOE-Contractor

Monitoring Agency: City DPW BOE

Monitoring Period: Monthly Monitoring

Verification of Compliance: BOE-Contractor will provide documentation by the 5th of the following month

- Installation of fencing around the perimeter of construction and staging areas prior to start of construction.
- Maintenance of fencing during construction.
- Development of a staging plan

BMP-TRANS-1 Construction Traffic:

Timeframe: Duration of Construction

Responsible Party: BOE-Contractor

Monitoring Agency: City DPW BOE

Monitoring Period: Monthly Monitoring

Verification of Compliance: BOE-Contractor will provide documentation by the 5th of the following month

- Deliveries to be scheduled during off-peak hours to minimize impacts to commuters.
- Configure construction parking to minimize traffic interference.
- Minimize obstruction of through-traffic lanes.
- Provide a flag person to facilitate traffic flow and prevent traffic congestion;
- Schedule operations affecting roadways for off-peak traffic hours.

Contractor Acknowledgement Initial here: _____

ECP Personnel Responsibility

This document identifies the measures that shall be implemented in the course of completing the MacArthur Lake Stormwater Capture Program. These measures are required as a result of the environmental impact analysis that was conducted for the Project, regulatory requirements applicable to the Project, or general best management practices called for by the City of Los Angeles. The implementation of the measures shall be the responsibility of the BOE Contractor, Subcontractors of the BOE Contractor, BOE, or a combination thereof.

Contractor Acknowledgement Initial here: _____

Macarthur Lake Stormwater Capture Project
Work order: S33WLPNP

ACKNOWLEDGEMENT OF AND AGREEMENT TO COMPLY WITH MANDATORY ENVIRONMENTAL MITIGATION MEASURES

I/We, the undersigned, depose and say that I am/we are the authorized representative(s) of:

Company Name (Contractor): _____

Contractor's License No.: _____

who submits a proposal for the **MacArthur Lake Stormwater Capture Project (W.O. S33WLPNP)** and hereby declare and agree to the following:

1. **Receipt and Understanding of Requirements:** I/We have received, thoroughly reviewed, and fully understand all environmental mitigation measures, conditions, and Best Management Practices (BMPs) as stipulated in the Contract Documents, including but not limited to Section 01562 "Environmental Mitigation or Conditions," the Mitigation Monitoring Program (MMP), and the associated Environmental Compliance Plan (ECP) framework.
2. **Full and Unconditional Compliance:** If awarded this Contract, I/we agree, at our sole cost and expense, to fully and faithfully comply with all Mitigation Measures (MM) and Best Management Practices (BMPs) outlined in the project's Environmental Impact Report (EIR), the MMP, and Section 01562 of the project specifications. I/We acknowledge that strict and continuous adherence to these environmental protection requirements is a material and non-negotiable condition of the Contract and that these measures are required by law and are not discretionary.
3. **Environmental Compliance Plan (ECP) Submission:** I/We agree to develop and submit a comprehensive, site-specific Environmental Compliance Plan (ECP) to the City Engineer for review and written approval a minimum of thirty (30) days prior to the commencement of any on-site work. I/We expressly agree and acknowledge that **no work of any kind shall begin on the project site until the City has provided explicit written approval of the ECP.** This ECP will detail the specific means, methods, procedures, responsible personnel, and documentation protocols we will implement to ensure verifiable compliance with all environmental requirements.
4. **Indemnification:** If awarded this Contract, I/we agree to indemnify, defend, and hold harmless the City of Los Angeles, its officials, officers, employees, and agents from and against any and all claims, demands, liabilities, fines, penalties, damages, losses, costs, and expenses, including but not limited to attorney's fees and legal costs, arising out of or in any way connected with our failure, or the failure of our subcontractors, suppliers, or employees at any tier, to comply with any of the environmental mitigation measures or permit conditions.

5. **Enforceability and Remedies for Non-Compliance:** I/We understand and acknowledge that failure to comply with any of the environmental requirements set forth in the Contract documents constitutes a material breach of contract. Such failure may result in, but is not limited to, the immediate issuance of stop-work orders, the imposition of fines and penalties by the City and/or regulatory agencies, withholding of progress payments, assessment of liquidated damages, including liquidated damages of five hundred dollars ($500.00) per calendar day for each day the Contractor fails to provide the initial Environmental Compliance Plan (ECP) or any subsequent monthly reports as required in Section 01562, and any other remedies available to the City under the Contract and at law or in equity.

I/We certify and declare under penalty of perjury under the laws of the State of California that the foregoing is true and correct and that this acknowledgement and agreement is submitted as a material part of our bid proposal.

Signature

Printed Name

Title

Date

BUREAU OF ENGINEERING

MACARTHUR LAKE
STORMWATER CAPTURE PROJECT
PROJECT NO. S33WMLRP, S343MSWC, S043MSWC

ATTACHMENT 8
EDUCATIONAL SIGN

JANUARY 2026

City of Los Angeles
California

Department of Public Works
Bureau of Engineering

ENGINEERING
CITY OF LOS ANGELES

THIS PAGE INTENTIONALLY LEFT BLANK

MACARTHUR LAKE STORMWATER CAPTURE PROJECT

PROYECTO DE CAPTURA DE AGAS [illegible]S DEL LAGO MACARTHUR

THE BALLONA CREEK WATERSHED | LA CUENCA DEL ARROYO BALLONA

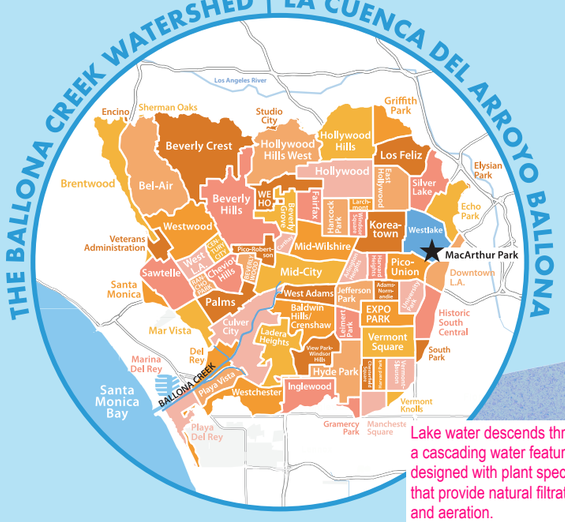

MacArthur Park is located towards the Northeast edge of the Ballona Creek Watershed. This site plays an important role in improving regional water quality.

MacArthur Park está ubicado hacia el extremo noreste de la cuenca del Arroyo Ballona. Este sitio es muy importante para mejorar la calidad del agua regional.

The cascading water feature provides an attractive park feature that helps clean and recirculate lake water.

The cascading water feature further cleans the water for the lake, and is an attractive park feature.

La cascada limpia el agua del lago y es una característica atractiva del parque.

4 CASCADING WATER FEATURE
CASCADAS DE AGUA

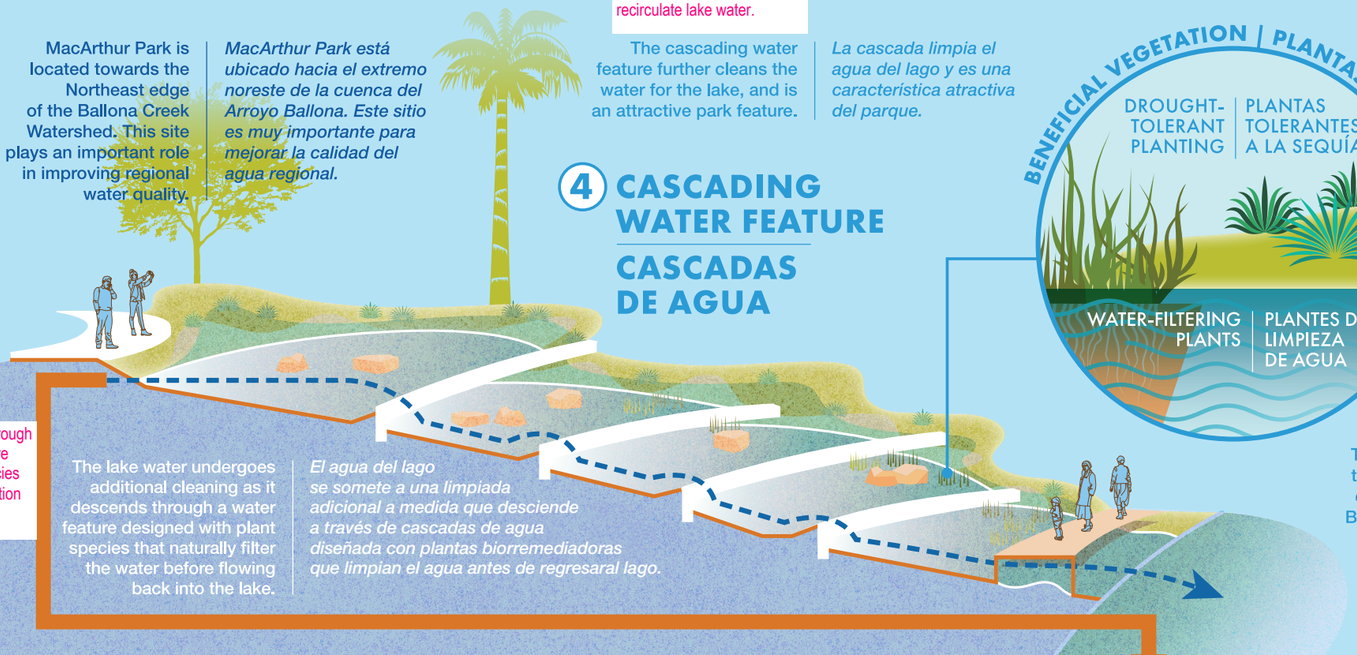

Lake water descends through a cascading water feature designed with plant species that provide natural filtration and aeration.

The lake water undergoes additional cleaning as it descends through a water feature designed with plant species that naturally filter the water before flowing back into the lake.

El agua del lago se somete a una limpiada adicional a medida que desciende a través de cascadas de agua diseñada con plantas biorremediadoras que limpian el agua antes de regresaral lago.

BENEFICIAL VEGETATION | PLANTAS VALIOSAS

Plant selection for the project focused on their ecology and functional benefits. Bioremediation species help clean the water. Drought-tolerant plants create a climate-adapted garden next to the water feature.

La selección de plantas para el projecto se centró en la ecología y beneficios funcionales. Las especies biorremediadoras ayudan a limpiar el agua. Las plantas resistentes a la sequía crean un jardín adaptado al clima junto a las cascads de agua.

Through new equipment, the filtered stormwater is cleaner and safer for the Ballona Creek watershed.

Con el nuevo equipo, las aguas pluviales filtradas son más limpias y seguras para la cuenca del Arroyo Ballona.

1 URBAN RUNOFF
ESCORRENTÍA SUCIA



Stormwater, contaminated with pollutants, enters the storm drain system. This dirty runoff is intercepted by the filtration system that cleans it before it goes into the lake.

Las aguas pluviales, contaminadas con contaminantes, ingresan al sistema de drenaje pluvial. Esta escorrentía sucia es interceptada por el sistema de filtración, limpiándola antes de que llegue al lago.

3a MACARTHUR LAKE

3b STORM DRAIN SYSTEM

2 STORMWATER FILTRATION SYSTEM
SISTEMA DE FILTRACIÓN DE AGUAS PLUVIALES

STORM DRAIN

A HEALTHY WATERSHED | UNA CUENCA SALUDABLE



COMMUNITY INVOLVEMENT | PARTICIPACIÓN DE LA COMUNIDAD



The community was integral to the design of this water feature. Their values contributed to the creation of a major park feature that brings nature, respite and enjoyment to all.

La comunidad estuvo muy involucrada en el diseño de estas cascadas de agua. Sus valores contribuyeron a la creación de una característica principal del parque que brinda naturaleza, descanso y disfrute a todos.

For more information, please visit: www.lacitysan.org/safecleanwater

Los Angeles Mayor: Karen Bass

Los Angeles City Council District 1 Representative: Eunisses Hernandez

Funding for this project has been provided in full or in part from the Los Angeles County Flood Control District's Safe Clean Water Program.

THIS NOTICE WAS POSTED

ON November 06 2025

UNTIL December 08 2025

REGISTRAR – RECORDER/COUNTY CLERK

Attachment 3

2025 250981

FILED
Nov 06 2025

Dean C. Logan, Registrar – Recorder/County Clerk

Electronically signed by CORTNEY MAFFITT

CITY OF LOS ANGELES
CALIFORNIA ENVIRONMENTAL QUALITY ACT
NOTICE OF DETERMINATION

(Article I – City CEQA Guidelines)

Public Resources Code Section 21152(a) requires local agencies to submit this information to the County Clerk. The filing of the notice starts a 30-day statute of limitations on court challenges to the approval of the project pursuant to Public Resources Code Section 21167.

LEAD CITY AGENCY AND ADDRESS:	COUNCIL DISTRICT
City of Los Angeles, Department of Public Works, Bureau of Engineering 1149 S. Broadway, Suite 600, MS-939, Los Angeles, CA 90015-2213	1

PROJECT TITLE (INCLUDING ITS COMMON NAME, IF ANY)	CASE NO. S33WMLRP
MacArthur Lake Stormwater Capture Project	Council File No. 23-0494-S2

PROJECT DESCRIPTION AND LOCATION:

The project would divert water from the storm drain system, treat it, and discharge it to MacArthur Lake for storage or return it to the storm drain system, reducing pollutant loads that enter Ballona Creek and waterways downstream. Some stored water would be discharged to the sewer system to make room for additional storage. Potable lake refill water would be reduced. In addition, the project would create a water feature and provide educational opportunities, such as interpretive/educational signage. The project site is located in MacArthur Park, City of Los Angeles, Los Angeles County.

An Environmental Impact Report was prepared which contains a more detailed description of the project. This may be obtained at the above address.

PROJECT APPLICANT/RECIPIENT OF PROJECT:
City of Los Angeles

CONTACT PERSON	STATE CLEARING HOUSE NUMBER	TELEPHONE NUMBER
Cristian Centeno	2022040153	(213) 485-4560

This is to advise that on November 5, 2025, the City Council of the City of Los Angeles as Lead Agency approved the project described above and made the following determinations:

SIGNIFICANT EFFECT	☒ Project **will** have a significant effect on the environment. ☐ Project **will not** have a significant effect on the environment.
MITIGATION MEASURES	☒ Mitigation measures **were** made a condition of project approval. ☐ Mitigation measures **were not** made a condition of project approval.
MITIGATION REPORTING / MONITORING	☒ A mitigation reporting or monitoring plan **was** adopted for the project. ☐ A mitigation reporting or monitoring plan **was not** adopted for the project.
OVERRIDING CONSIDERATION	☒ Statement of Overriding Considerations **was** adopted. ☐ Statement of Overriding Considerations **was not** adopted. ☐ Statement of Overriding Considerations **was not** required.
ENVIRONMENTAL IMPACT REPORT	☒ An Environmental Impact Report **was** prepared and certified and findings **were** made for project pursuant to the provisions of CEQA. ☐ An Environmental Impact Report **was not** prepared for the project.
NEGATIVE DECLARATION	☐ A Negative Declaration or Mitigated Negative Declaration **was** prepared for the project and may be examined at the Office of the City Clerk. ☒ A Negative Declaration or Mitigated Negative Declaration **was not** prepared for the project.

SIGNATURE:	TITLE:	DATE:
Maria Martin M E Martin	Environmental Affairs Officer	11/6/2025

The documents constituting the record of proceedings in this matter are located at the Office of the City Clerk, 200 North Spring Street, 3rd Floor, Los Angeles, California 90012; the Board of Public Works Commission, 200 North Spring Street, Los Angeles, California 90012; the Department of Public Works, Bureau of Street Services (StreetsLA), 1149 South Broadway, Suite 400, Los Angeles, California 90015; the Department of Public Works, Bureau of Engineering (BOE), 1149 South Broadway, Suite 600, Los Angeles, California 90015; and any other relevant City department.

DISTRIBUTION: Part 1 - County Clerk Part 2 - Agency Record Part 3 - Resp. State Agency (if any)

State of California—Department of Fish and Wildlife

2025 ENVIRONMENTAL DOCUMENT FILING FEE CASH RECEIPT

DFW 753.5a (REV. 01/01/25) Previously DFG 753.5a

RECEIPT Number:
19 — 11/06/2025 — 202511061230005

STATE CLEARING HOUSE # *(If applicable)*
2022040153

SEE INSTRUCTIONS ON REVERSE. TYPE OR PRINT CLEARLY.

LEAD AGENCY	LEAD AGENCY EMAIL	DATE
CITY OF LOS ANGELES DEPARTMENT OF PUBLIC WORKS BUREAU OF ENGINEERING		11/06/2025

COUNTY/STATE AGENCY OF FILING	DOCUMENT NUMBER
LOS ANGELES	2025250981

PROJECT TITLE

MACARTHUR LAKE STORMWATER CAPTURE PROJECT

PROJECT APPLICANT NAME	PROJECT APPLICANT EMAIL	PHONE NUMBER
CRISTIAN CENTENO		

PROJECT APPLICANT ADDRESS	CITY	STATE	ZIP CODE
1149 S BROADWAY SUITE 600, MS 939	LOS ANGELES	CA	90015

PROJECT APPLICANT *(Check appropriate box):*

☑ Local Public Agency ☐ School District ☐ Other Special District ☐ State Agency ☐ Private Entity

CHECK APPLICABLE FEES:

☑	Environmental Impact Report (EIR)	$4,123.50	$ 4,123.50
☐	Mitigated/Negative Declaration (MND)(ND)	$2,968.75	$ 0.00
☐	Certified Regulatory Program (CRP) document - payment due directly to CDFW	$1,401.75	$ 0.00
☐	Exempt from fee		
	☐ Notice of Exemption (attach)		
	☐ CDFW No Effect Determination (attach)		
☐	Fee previously paid (attach previously issued cash receipt copy)		
☐	Water Right Application or Petition Fee (State Water Resources Control Board only)	$850.00	$ 0.00
☑	County documentary handling fee		$ 75.00
☐	Other		$ 0.00

PAYMENT METHOD:

☐ Cash ☐ Credit ☑ Check ☐ Other

TOTAL RECEIVED $ 4,198.50

SIGNATURE	AGENCY OF FILING PRINTED NAME AND TITLE
X	ITC

ORIGINAL - PROJECT APPLICANT COPY - CDFW/ASB COPY - LEAD AGENCY COPY - COUNTY CLERK DFW 753.5a (Rev. 01/01/2025)

Print Form

Notice of Determination

Appendix D

To:

☒ Office of Planning and Research

U.S. Mail: P.O. Box 3044, Sacramento, CA 95812-3044

Street Address: 1400 Tenth St., Rm 113, Sacramento, CA 95814

☐ County Clerk
County of: Los Angeles
Address: 12400 Imperial Highway
Norwalk, CA 90650

From:
Public Agency: City of Los Angeles
Address: 1149 S. Broadway
Los Angeles, CA 90015
Contact: Cristian Centeno
Phone: 213-485-4560

Lead Agency (if different from above):

Address:

Contact:
Phone:

SUBJECT: Filing of Notice of Determination in compliance with Section 21108 or 21152 of the Public Resources Code.

State Clearinghouse Number (if submitted to State Clearinghouse): 2022040153

Project Title: MacArthur Lake Stormwater Capture Project

Project Applicant: City of Los Angeles, Department of Public Works

Project Location (include county): MacArthur Park, City of Los Angeles, Los Angeles County

Project Description:

The project would divert water from the storm drain system, treat it, and discharge it to MacArthur Lake for storage or return it to the storm drain system, reducing pollutant loads that enter Ballona Creek and waterways downstream. Some stored water would be discharged to the sewer system to make room for additional storage. Potable lake refill water would be reduced. In addition, the project would create a water feature and provide educational opportunities, such as interpretive/educational signage.

This is to advise that the Los Angeles City Council (☒ Lead Agency or ☐ Responsible Agency) has approved the above described project on 11/05/2025 (date) and has made the following determinations regarding the above described project.

1. The project [☒ will ☐ will not] have a significant effect on the environment.
2. ☒ An Environmental Impact Report was prepared for this project pursuant to the provisions of CEQA.
   ☐ A Negative Declaration was prepared for this project pursuant to the provisions of CEQA.
3. Mitigation measures [☒ were ☐ were not] made a condition of the approval of the project.
4. A mitigation reporting or monitoring plan [☒ was ☐ was not] adopted for this project.
5. A statement of Overriding Considerations [☒ was ☐ was not] adopted for this project.
6. Findings [☒ were ☐ were not] made pursuant to the provisions of CEQA.

This is to certify that the final EIR with comments and responses and record of project approval, or the negative Declaration, is available to the General Public at:
https://www.lacitysan.org/san/faces/wcnav_externalId/s-lsh-es-ceqap-mlscp?_adf.ctrl-state=wz5t01m7

Signature (Public Agency): ME Martin Title: Environmental Affairs Officer

Date: 11/6/2025 Date Received for filing at OPR:

Authority cited: Sections 21083, Public Resources Code.
Reference Section 21000-21174, Public Resources Code.

Revised 2011